FORM NO. 3316–552

TORO®

MODEL NO. 20922B – 4900001 & UP
MODEL NO. 20928B – 4900001 & UP

OPERATOR'S MANUAL

48 CM REAR BAGGER MOWER

ENGLISH

⚠ SAFETY INSTRUCTIONS

Improper use or maintenance of this mower by the operator or owner can result in injury. To reduce the potential for injury, comply with these safety instructions and always pay attention to the safety alert symbol ⚠. Failure to comply with these instructions may result in personal injury.

WARNING: Engine exhaust contains carbon monoxide which is an odorless, deadly poison. Carbon monoxide is also known to the State of California to cause birth defects. Do not run engine indoors or in an enclosed area.

BEFORE OPERATING

1. Read this manual carefully before operating the mower. Become familiar with the controls and proper use of the mower. Never allow children under 16 years of age to operate the mower. Never allow adults to operate mower without proper instructions.

2. The operator of the mower is responsible for keeping everyone, especially children and pets, away from area of operation. Thoroughly inspect area where mower will be used and remove sticks, stones, wire, and debris that could be picked up and thrown by mower. Watch for foreign objects while mowing.

3. Wear long pants and substantial shoes. Do not operate mower while wearing open-toed shoes, jewelry, loose clothing or when barefoot.

4. Check fuel level before starting engine. Do not fill fuel tank indoors, when the engine is running, or until engine cools for several minutes after running. Wipe up spilled gasoline before starting engine.

5. Keep all guards, shields, and safety devices in place. Repair or replace damaged parts, including decals. Check all safety devices before each use.

6. Traction drive is designed to stop when control bar is released. Ensure control functions properly before each use of mower.

7. Because fuel is highly flammable, handle it carefully.

- **A.** Use an approved container.
- **B.** Fill fuel tank outdoors, not indoors. **NEVER ADD FUEL TO AN ENGINE THAT IS RUNNING OR HOT.**
- **C.** Install gas cap on fuel container and gas tank, and wipe up any spilled gasoline before starting engine.

WHILE OPERATING

8. Do not run engine indoors.

9. Do not upend mower when starting engine. If necessary, tilt mower so that blade points away from operator and bystanders.

10. Do not stand on the discharge side of the mower when pulling recoil starter.

11. Always maintain secure footing. Keep a firm grip on the handle and walk; never run. Never operate mower in wet grass. Mow only in daylight or in good artificial light.

12. Mow across the face of slopes; never up and down. Use extreme caution when changing direction on slopes. Wear skid resistant shoes on slopes. Do not mow excessively steep slopes.

13. Always wear safety glasses or eye shields during operation to protect eyes from foreign objects that may be thrown from the machine.

14. Keep face, hands, and feet away from the mower housing and cutter blade when the engine is running. Blade can cause injury to hands and feet.

15. Stay behind the handle until the engine stops and keep clear of discharge opening at all times.

16. When bagging grass, stop engine and stay behind handle until all moving parts stop before removing and emptying bag.

17. When mowing, ensure grass bag is installed over discharge opening or discharge door is closed.

18. Shut engine off and stay behind handle until all moving parts stop before unclogging chute.

19. Since the blade rotates for a few seconds after the engine is shut off, stay behind the handle until all moving parts stop.

20. After striking a foreign object or if mower vibrates abnormally, stop engine and remove wire from spark plug. Check mower for damage and make all repairs before using mower again. If major repairs are ever needed or if assistance is desired, contact your local Authorized TORO Service Dealer.

21. Stop the engine and wait for all moving parts to stop before adjusting the height–of–cut.

22. Stop the blade when pushing the mower outside the lawn area.

23. Stop engine before leaving the operator's position—behind the handle. Disconnect wire from spark plug if mower will be unattended.

24. Do not touch engine while it is running or shortly after it is stopped because engine will be hot enough to cause a burn.

25. If mower must be lifted to be transported, turn off engine and stay behind the handle until all moving parts stop.

©The Toro Company–1993
All Rights Reserved

SAFETY INSTRUCTIONS

MAINTENANCE

26. Perform only those maintenance instructions described in this manual. If major repairs are ever needed or if assistance is desired, contact your local Authorized TORO Service Dealer.

27. Before mower is cleaned, inspected, serviced, or adjusted, stop engine and disconnect wire from spark plug. Keep wire away from plug to prevent accidental starting.

28. To ensure the mower is in safe operating condition, frequently check and keep all nuts, bolts, and screws tight. Ensure blade nuts are tightened to 20–35 N·m (15–25 ft–lb).

29. When servicing blade, refer to blade maintenance section for correct installation and servicing procedures.

30. To reduce fire hazard, keep engine free of excessive grease, grass, leaves, and accumulations of dirt.

31. Do not overspeed the engine by changing governor settings.

32. Check grass catcher bag frequently for wear or deterioration. Replace with a new bag when worn or damaged for your protection.

33. Allow engine to cool before storing mower in any enclosure. Do not store mower near any open flame or where gasoline fumes may be ignited by a spark.

34. At the time of manufacture, the mower conformed to the safety standards in effect for rotary mowers. To assure optimum performance and continued safety certification of the mower, use genuine TORO replacement parts and accessories. Replacement parts and accessories made by other manufacturers may result in non-conformance with the safety standards, and that could be dangerous.

SAFETY SYMBOL GLOSSARY



Safety alert



Keep hands and feet away from rotating blade



Read and understand operator's manual



Stop engine before leaving operator's position



Choke on



Ignition off



Fast Slow



Keep bystanders from area being mowed

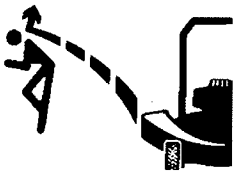

Keep all guards in place



Never open discharge door on mower when engine is running, unless grass bag is installed

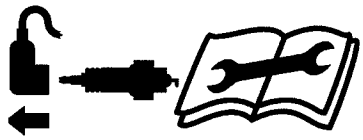

Pull wire off spark plug and read your operator's manual before doing any maintenance or service

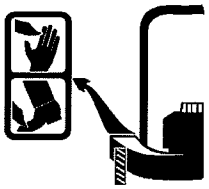

Do not stick hands or feet into discharge tunnel

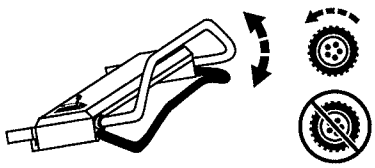

Squeeze control bar against handle to engage traction drive



Traction drive – ENGAGED



Traction drive – DISENGAGED

TABLE OF CONTENTS

	Page
Set–Up Instructions	3
Before Operating	5
Operating Instructions	6
Maintenance	8
Servicing Air Cleaner	8
Replacing Spark Plug	9
Draining Gasoline	9
Changing Crankcase Oil	9
Adjusting Throttle	9
Adjusting Traction Wheel Drive	10
Inspecting/Removing/Sharpening Blade	10
Lubrication	11
Charging Battery	11
Cleaning Mower Housing	12
Preparing Mower For Storage	12
Product Identification	12
Toro Service Support	12

SET–UP INSTRUCTIONS

INSTALL HANDLE

1. INSTALLING HANDLE—Loosen knobs on mounting brackets (Fig. 1).

2. Position mounting brackets in a vertical position so that holes face up.

3. Slide handle ends into holes in mounting brackets until handle ends are completely seated in brackets (Fig. 1). Make sure throttle cable, electric start cable and traction cable rest on top of left mounting bracket (Fig. 2).

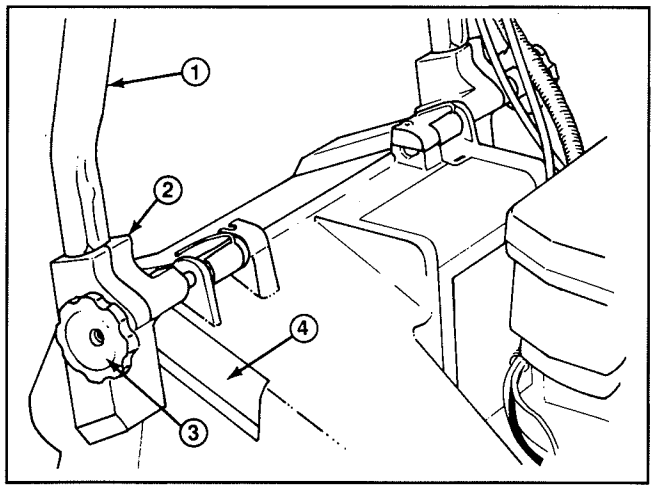

Figure 1

1. **Handle**
2. **Mounting bracket**
3. **Knobs**
4. **Housing pocket**

4. Rotate handle and brackets rearward until brackets fit securely into housing pockets (Fig. 2).

5. Tighten knobs until edges of slots on top of mounting brackets touch.

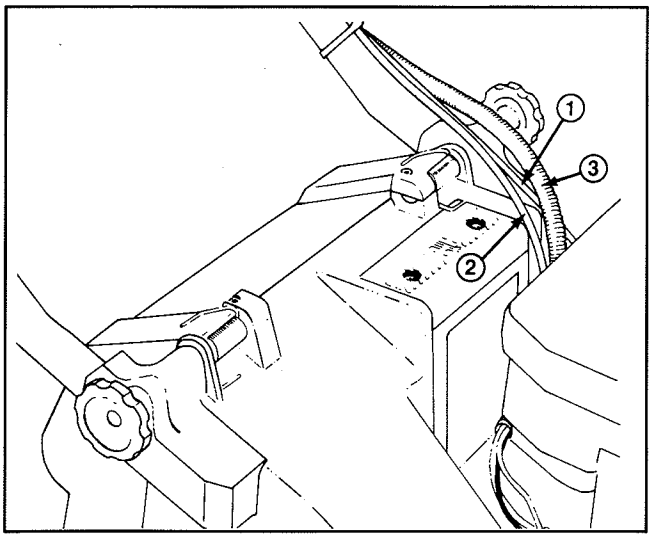

Figure 2

1. **Throttle cable**
2. **Traction cable**
3. **Electric start cable**

6. Use cable tie to secure cable(s) to lower side of left hand tube (Fig. 3). Cable tie should be positioned 25 mm (1") from bend in handle. See Figure 3 for correct cable placement.

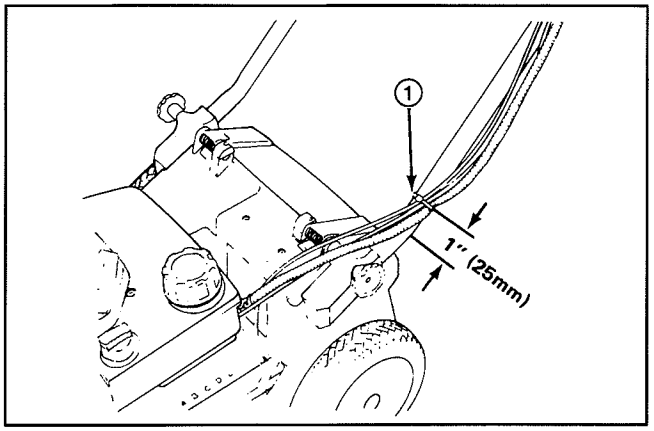

Figure 3

1. **Cable tie**

Note: Make sure cable(s) do not interfere with the raising or lowering of discharge door.

7. Cut excess length from end of cable tie on lower left handle.

SET-UP INSTRUCTIONS

INSTALL GRASS BAG

1. Raise discharge door, slide bag ramp attached to bag into discharge opening, and hook bag frame onto rounded portion of mounting brackets (Fig. 4).

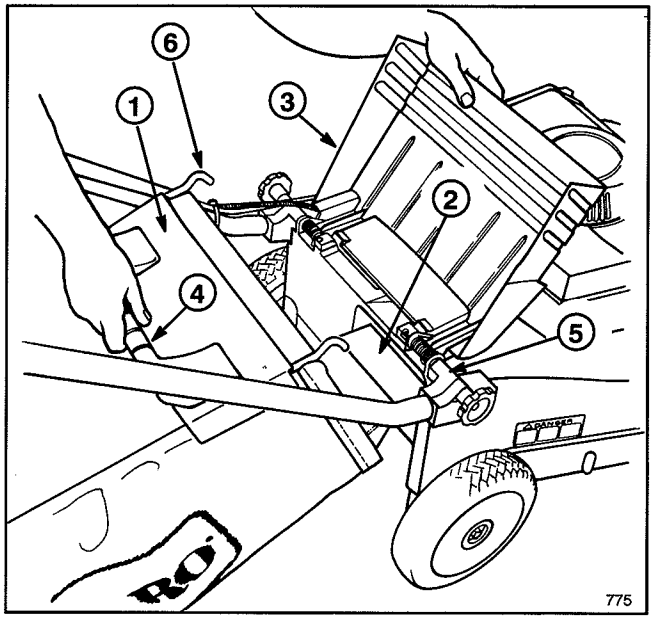

Figure 4

1. **Bag door**
2. **Bag ramp**
3. **Discharge door**
4. **Bag handle**
5. **Mounting bracket**
6. **Bag frame hook**

Note: Make sure grass bag door is **fully** closed against grass bag before installing bag on mower.

2. Allow discharge door to rest on top of bag (Fig. 5).

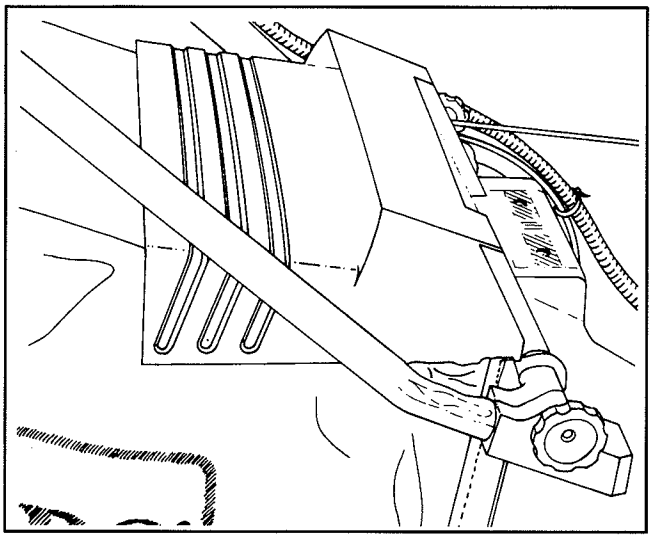

Figure 5

INSTALL BATTERY (electric start model)

1. Refer to Charging Battery, page 11. Slide battery, decal side facing operator's position, between mounting tabs on back of control panel (Fig. 6).

2. Connect wires.

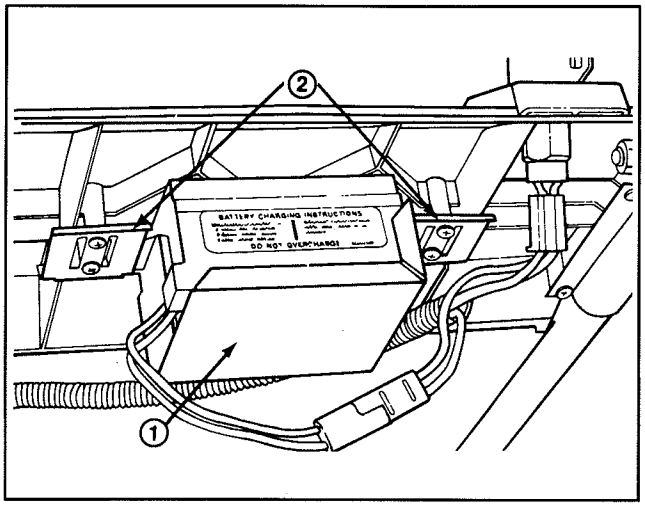

Figure 6

1. **Battery**
2. **Mounting tab**

BEFORE OPERATING

FILL CRANKCASE WITH OIL

Fill crankcase with SAE 30 oil until oil level reaches FULL mark on dipstick as shown in Figure 7. The maximum crankcase capacity is 25 ounces (0.75 liters) of oil. Use any high quality detergent oil having the American Petroleum Institute (API) "service classification" — SE, SF or SG.

Before each use, ensure oil level is between ADD and FULL marks (Fig. 7). Add oil if level is low.

1. Position mower on level surface and clean around oil dipstick.

2. Remove dipstick by rotating cap counterclockwise 1/4 turn.

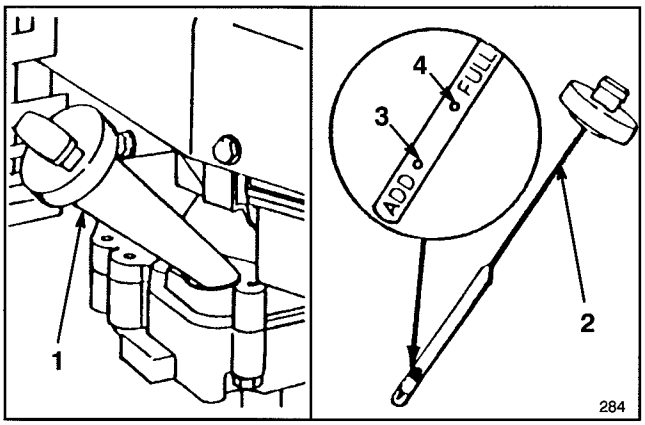

Figure 7

1. Oil fill tube 2. Dipstick 3. ADD mark 4. FULL mark

3. Wipe dipstick and insert it into filler neck. Rotate cap 1/4 turn. Then remove dipstick and check level of oil (Fig. 7). If level is low, add only enough oil to raise level to FULL mark on dipstick. **DO NOT FILL ABOVE FULL MARK BECAUSE ENGINE COULD BE DAMAGED WHEN STARTED. POUR OIL SLOWLY.**

Note: Check oil level each time mower is used or after every 5 hours of mower operation. Initially, change oil after the first 2 hours of operation; thereafter, change oil after every 25 hours of operation. More frequent oil changes are required in dusty or dirty conditions.

4. Insert dipstick into filler neck and rotate cap clockwise 1/4 turn to lock it in place.

FILL FUEL TANK WITH GASOLINE

WARNING

DANGER: Gasoline is extremely flammable and explosive under certain conditions. DO NOT SMOKE when handling fuel and keep fuel far away from open flames and sparks. Never buy more than a 30 day supply of gasoline. Store it in an approved container. Keep gasoline out of reach of children.

Refuel outdoors and only when engine is cold. Do not fill tank full. Fill tank to within 6 to 13 mm (1/4" to 1/2") from top of tank, not into filler neck. This space is for expansion of fuel. Use funnel or spout to prevent spilling. Wipe up any spilled gas.

Note: The Toro Company strongly recommends the use of fresh, clean, **UNLEADED** regular grade gasoline in Toro gasoline powered products. Unleaded gasoline burns cleaner, extends engine life, and promotes good starting by reducing the build–up of combustion chamber deposits. Leaded gasoline can be used if unleaded is not available.

1. Clean around fuel tank cap and remove cap from tank. Do not fill tank full. Using unleaded gasoline, fill fuel tank to within 6 to 13 mm (1/4 to 1/2 inch) from top of tank, not into the filler neck.

2. Install fuel tank cap and wipe up any spilled gasoline.

Toro also recommends that Toro Stabilizer/Conditioner be used regularly in all Toro gasoline powered products during operation and storage seasons. Toro Stabilizer/Conditioner cleans the engine during operation and prevents gum-like varnish deposits from forming in the engine during periods of storage.

IMPORTANT: Do not mix oil with the gasoline. Never use methanol, gasoline containing methanol, gasohol containing more than 10% ethanol, premium gasoline or white gas because engine fuel system damage could result.

Do not use fuel additives other than those manufactured for fuel stabilization during storage such as Toro's Stabilizer/Conditioner or a similar product. Toro's Stabilizer/Conditioner is a petroleum distillate based conditioner/stabilizer. Toro does not recommend stabilizers with an alcohol base such as ethanol, methanol or isopropyl. Additives should not be used to try to enhance the power or performance of machine.

OPERATING INSTRUCTIONS

OPERATING TIPS

1. CHECK OIL LEVEL—Maintain oil level between ADD and FULL range as shown on dipstick (Fig. 7).

2. CUTTING AND BAGGING—Best results are achieved when only about 1/3 of the grass blade is cut. If long grass must be cut, use highest height-of-cut setting for first mowing. Then recut the grass at a more normal setting. If too long of grass is cut, mower may plug and cause engine to stall.

When cutting in dry, dusty conditions move the throttle to a slower speed to reduce the amount of dust generated by mower.

3. SHARP BLADE—Begin each cutting season with a sharp blade. Periodically file down nicks.

STARTING, STOPPING, AND SELF-PROPELLING

CONTROLS—Key switch (electric start model), throttle, and self-propel control bar are on upper handle (Fig. 8). Recoil starter is on top of engine (Fig. 9).

1. Push spark plug wire onto spark plug.

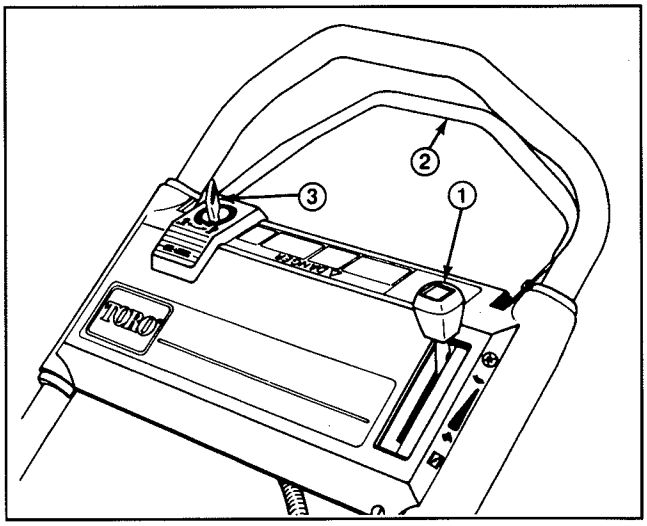

Figure 8

1. Throttle
2. Self-propel control bar
*** 3. Key switch**

*** electric start model**

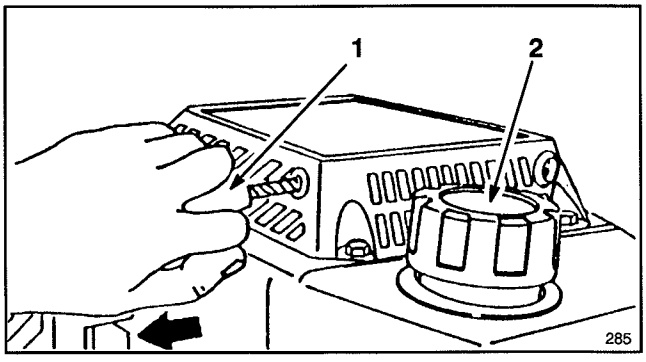

Figure 9

1. Recoil starter **2. Gas tank cap**

2. KEY-LECTRIC STARTING (electric start model)—Move throttle forward to CHOKE position (Fig. 10). Turn key (Fig. 8) to START and release when engine begins running. Move throttle rearward to FAST position or regulate engine speed as desired. If the battery's charge is too weak to start the engine, use the recoil starter (Fig. 9).

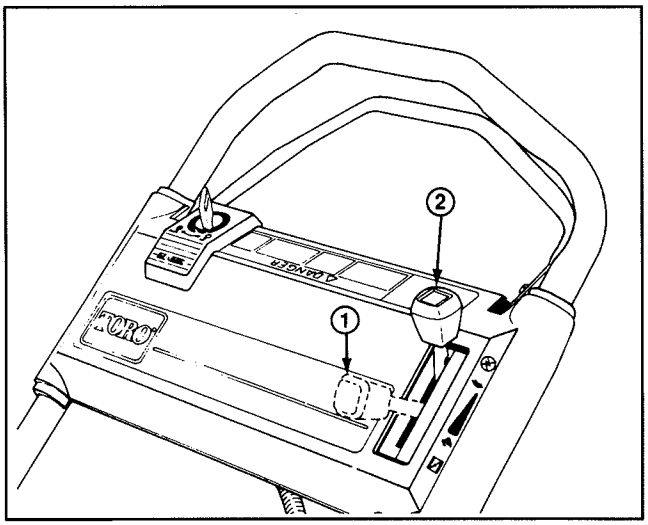

Figure 10

1. Choke on **2. Engine off**

3. MANUAL STARTING—Move throttle forward to CHOKE position (Fig. 10). Pull engine mounted recoil starter (Fig. 9) out until slack in rope is taken up. Then pull vigorously to start the engine. When engine starts, move throttle to FAST position or regulate engine speed as desired.

4. STOPPING (Fig. 10)—To stop engine, move throttle rearwards to ENGINE OFF position. Remove key from switch and pull wire off spark plug if mower will be unattended or not used.

5. WHEEL TRACTION OPERATION (Fig. 11)—To self-propel the mower, squeeze the control bar against the handle. To stop the self-propel drive, release the control bar.

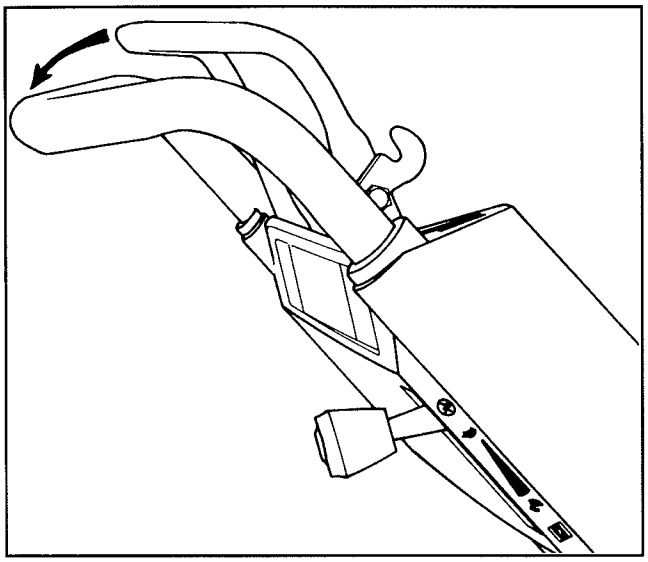

Figure 11

OPERATING INSTRUCTIONS

Note: The drive wheels are equipped with freewheeling clutches which enable the mower to be pulled rearward easier when the wheel drive is disengaged. To disengage the clutches, mower must be pushed forward at least 2.5 cm (1") after wheel drive operation has stopped.

USING GRASS BAG

1. Stop engine and wait for all parts to stop.
2. INSTALLING BAG—Raise discharge door, slide bag ramp attached to bag into discharge opening, and hook bag frame onto mounting bracket (Fig. 12). Allow discharge door to rest on top of bag (Fig. 13).

Note: Make sure grass bag door is **fully** closed against grass bag before installing bag on mower.

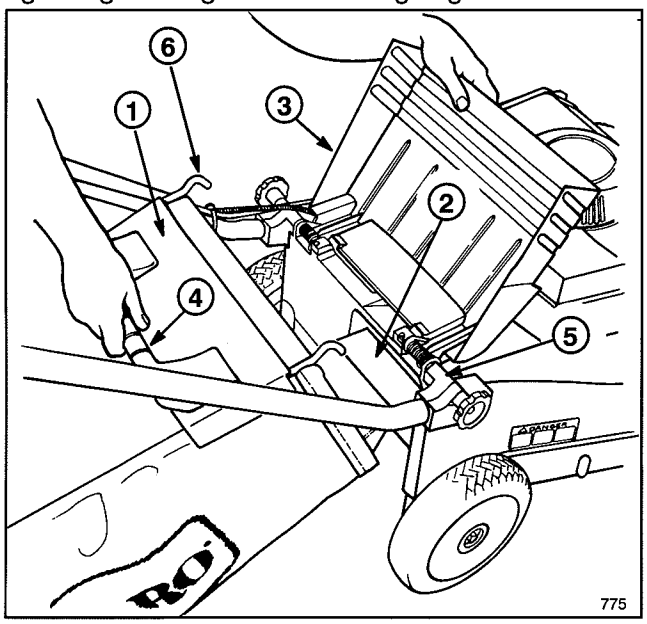

Figure 12

1. **Bag door**
2. **Bag ramp**
3. **Discharge door**
4. **Bag handle**
5. **Mounting bracket**
6. **Bag frame hook**

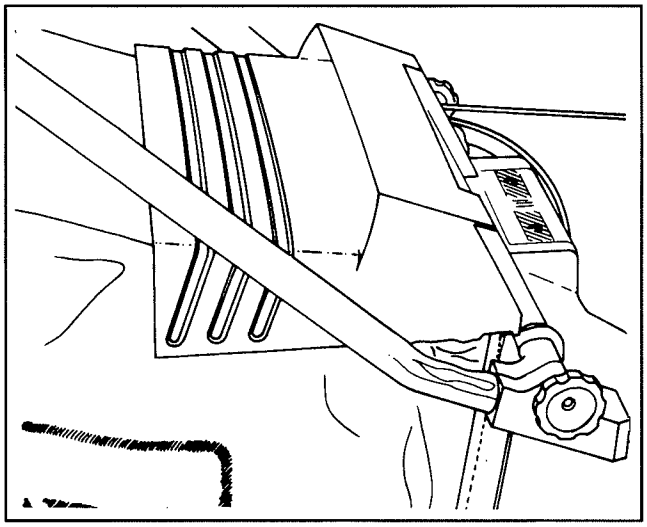

Figure 13

3. REMOVING BAG—**Stop engine and wait for all moving parts to stop.** For protection, always keep hands and feet away from mower housing while engine is running. Raise discharge door. While holding discharge door up, grasp handle on grass bag and lift bag off mower. Allow discharge door to close.

Note: When removing the grass bag, the bag ramp scoops out any clippings that may be plugging the discharge opening. If the discharge opening remains plugged, pull wire off spark plug and clear all clippings from the mower.

4. EMPTYING BAG—Grasp bag frame handle and rear of grass bag. Tip bag door up and gradually tip bag forward to empty clippings.

⚠ DANGER

- **Grass clippings and other objects can be thrown from an open discharge tunnel.**
- **Objects thrown with enough force could cause serious personal injury or death to operator or bystander.**
- **Never open door on discharge tunnel when engine is running unless the grass bag is securely installed.**

⚠ DANGER

- **A worn grass bag could allow small stones and other similar debris to be thrown in operator's or bystander's direction.**
- **Thrown objects can cause serious personal injury or death to operator or bystanders.**
- **Check the grass bag frequently. If it is damaged, install a new genuine TORO replacement bag.**

ADJUSTING HEIGHT–OF–CUT

Five letters on the belt cover represent the height–of–cut settings. All wheels automatically adjust to the same height–of–cut setting.

1. Stop the engine and pull wire off spark plug. For electric start model, remove key from switch.
2. Use one or two fingers to squeeze the height–of–cut adjustment lever (Fig. 14).

To raise the wheel height, squeeze the lever to unlock the height–of–cut adjustment lever and pull up on the mower. Release lever when desired height is found. To lower the height, squeeze the height–of–cut adjustment lever to release the lever and push down on the mower **while rolling the mower forward**. Use the pointer on the link rod to locate the correct setting.

OPERATING INSTRUCTIONS

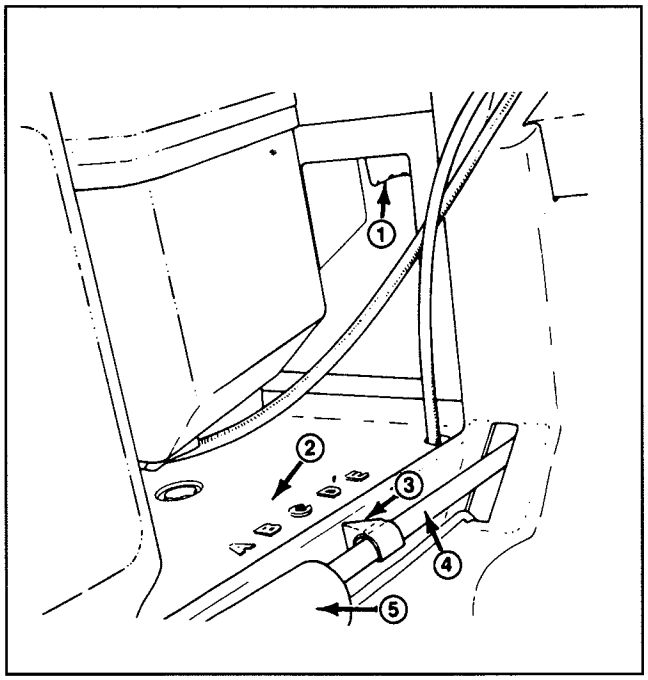

Figure 14

1. Height–of–cut adjustment lever
2. Height settings
3. Pointer
4. Link rod
5. Spring cover

3. Make sure the height adjustment lever is locked into a height setting before beginning operation. The height should not change when the height–of–cut is locked.

MAINTENANCE

⚠ CAUTION

- **Engine could start accidentally.**
- **Accidental starting of engine could cause serious injury to operator or bystanders.**
- **Pull wire off spark plug before performing any maintenance or adjustments.**

SERVICING AIR CLEANER

Normally, clean air cleaner after every 25 operating hours. More frequent cleaning is required when mower is operated in dusty or dirty conditions.

1. Stop engine and pull wire off spark plug. For electric start model, remove key from switch.

2. Rotate knob securing air cleaner cover to engine until cover can be removed. Clean cover thoroughly (Fig. 15).

3. If the foam element is dirty, remove it from air cleaner body (Fig. 15). Clean thoroughly.

A. WASH foam element in a solution of liquid soap and warm water. Squeeze to remove dirt, but do not twist because foam may tear. Rinse thoroughly in clear water.

B. DRY by wrapping in a clean rag. Squeeze rag and foam element to dry.

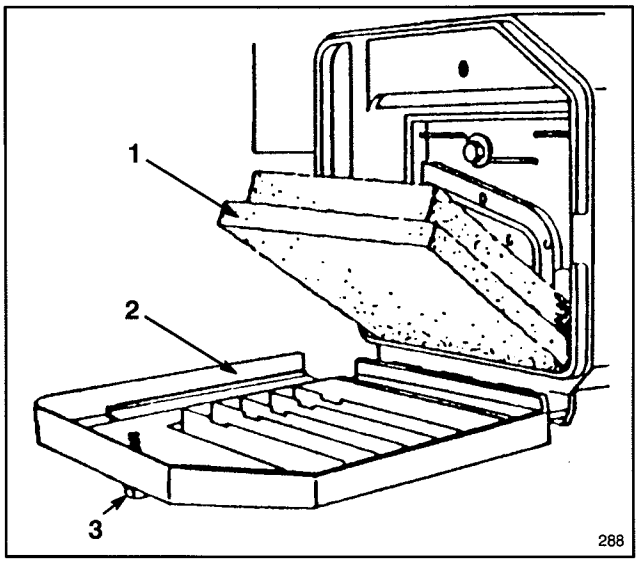

Figure 15

1. Foam element
2. Cover
3. Knob

C. SATURATE element with 150 ml (5 ounces) of SAE 30 engine oil. Squeeze element to remove excess oil and to distribute oil thoroughly. A damp element is desirable.

4. Reinstall foam element and air cleaner cover.

IMPORTANT: Do not operate engine without air cleaner element otherwise extreme engine wear and damage will likely result.

MAINTENANCE

REPLACING SPARK PLUG

Use a CHAMPION RC12YC spark plug or equivalent. Correct air gap is 0.76 mm (0.030"). Remove plug after every 25 operating hours and check its condition.

1. Stop engine and wait for it to cool. Pull wire off spark plug. For electric start model, remove key from switch.
2. Clean around spark plug and remove plug from cylinder head.

IMPORTANT: Replace a cracked, fouled, or dirty spark plug. Do not sand blast, scrape, or clean electrodes because engine damage could result from grit entering cylinder.

3. Set air gap at 0.76 mm (0.030") (Fig. 16). Install correctly gapped spark plug and gasket seal. Tighten plug firmly to 19 N·m (14 ft–lb).

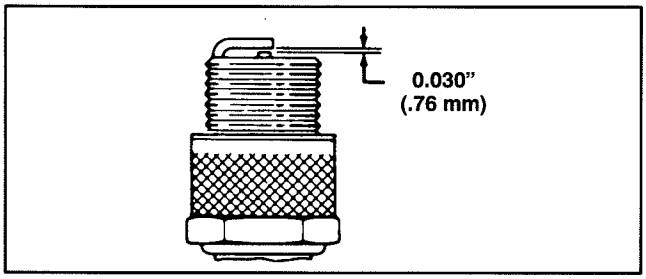

Figure 16

DRAINING GASOLINE

1. Stop engine and wait for engine to cool. Pull wire off spark plug. For electric start model, remove key from switch.

Note: Drain gasoline from a cold engine only.

2. Remove cap from fuel tank and use pump–type syphon to drain fuel into clean gas can.

Note: This is the only procedure recommended for draining fuel.

CHANGING CRANKCASE OIL

Change oil after the first 2 operating hours and after every 25 hours thereafter. Since warm oil drains better and carries more contaminants than cold, run engine for several minutes before draining oil.

1. Stop engine and pull wire off spark plug. For electric start model, remove key from switch.
2. Lift discharge door and remove grass bag. Drain gasoline from fuel tank: refer to Draining Gasoline, page 8.
3. Remove dipstick from oil fill tube and place a drain pan next to left side of mower.
4. Tip mower on its left side, allowing oil to drain into drain pan (Fig. 17).
5. When oil is drained, return mower to upright position and add fresh oil to engine. Refer to Fill Crankcase With Oil, page 5.

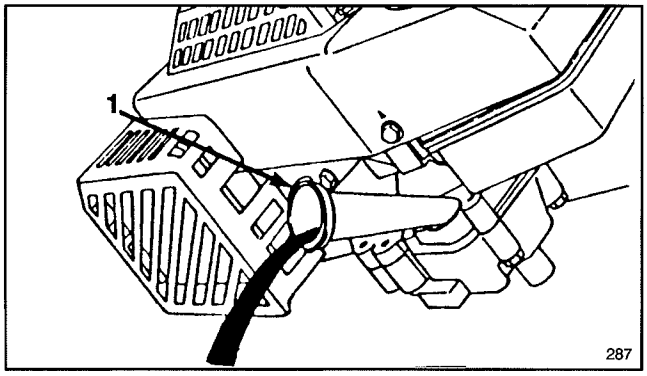

Figure 17

1. **Oil fill tube**

ADJUSTING THROTTLE

Throttle control adjustment may be required if engine does not start or stop. Whenever a new throttle control cable is installed, the throttle must be adjusted.

1. Stop engine and pull wire off spark plug. For electric start model, remove key from switch.
2. Move throttle control to FAST position.
3. Loosen cable clamp screw until throttle cable slides (Fig. 18).
4. Move throttle cable left or right until holes in throttle lever and throttle bracket align (Fig. 18).
5. Pull throttle cable slightly to remove any slack and tighten cable clamp screw to lock adjustment in place.

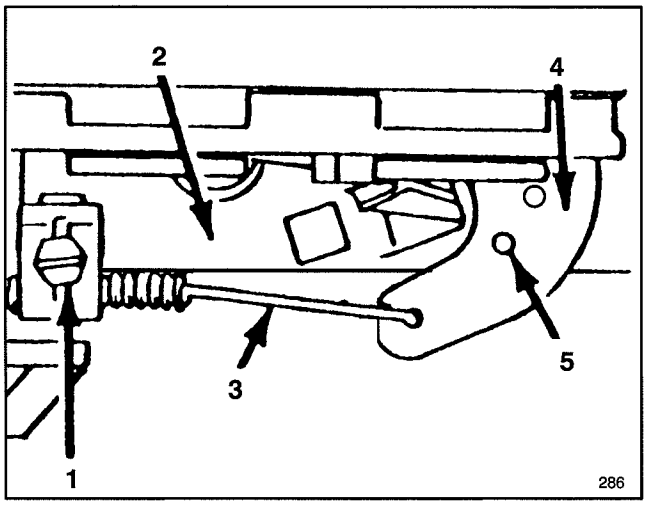

Figure 18

1. **Cable clamp screw**
2. **Throttle bracket**
3. **Throttle cable**
4. **Throttle lever**
5. **Aligned holes**

MAINTENANCE

ADJUSTING WHEEL TRACTION DRIVE

If mower does not self-propel or self-propels when control bar is **more** than 1-1/2 inches from the handle, adjust wheel drive control knob under control panel.

1. Stop the engine.
2. Rotate adjustment knob (Fig. 19) 1/2 turn clockwise to tighten drive belt, or 1/2 turn counterclockwise to loosen belt. Hold control cable while rotating to prevent cable from turning.

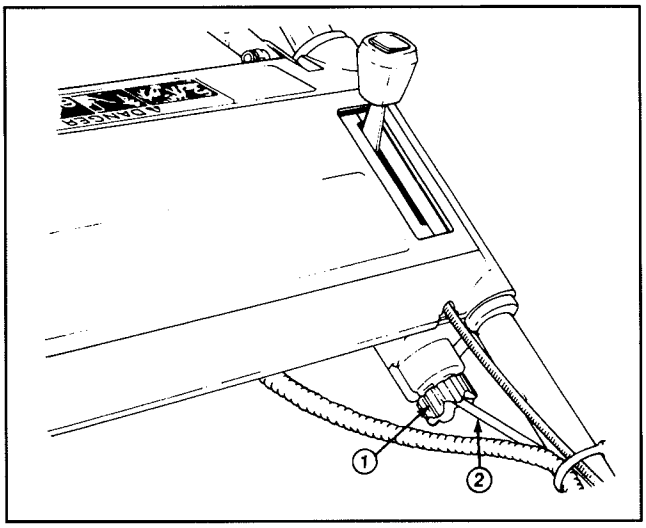

Figure 19

1. **Adjustment knob** 2. **Control cable**

3. To check traction adjustment, slowly squeeze the control bar toward the handle. The traction is adjusted correctly when resistance is felt when the control bar is approximately 25 mm (1") from upper handle (Fig. 20).

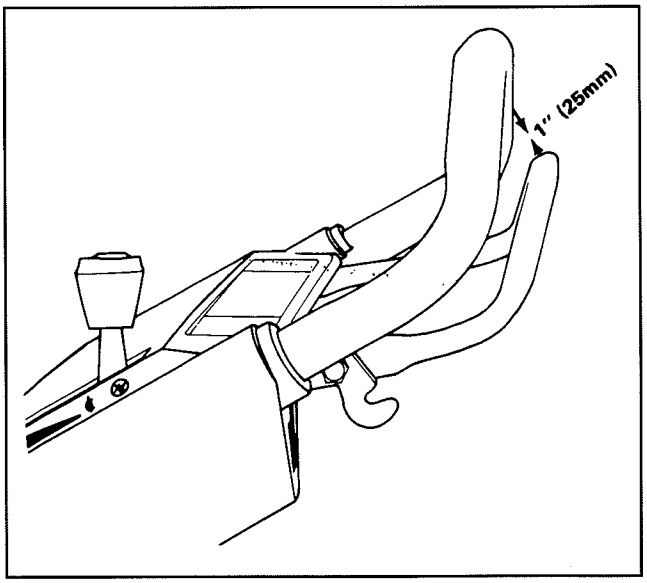

Figure 20

4. If loss of traction or improper engagement still occurs after readjustment, repeat steps 2–3 until properly adjusted.

INSPECTING/REMOVING/SHARPENING BLADE

1. Stop engine and pull wire off spark plug. For electric start model, remove key from switch.
2. Drain gasoline from fuel tank; refer to Draining Gasoline, page 9.
3. Tip mower on its left side (Fig. 21). Avoid rotating blade as starting problems may result.

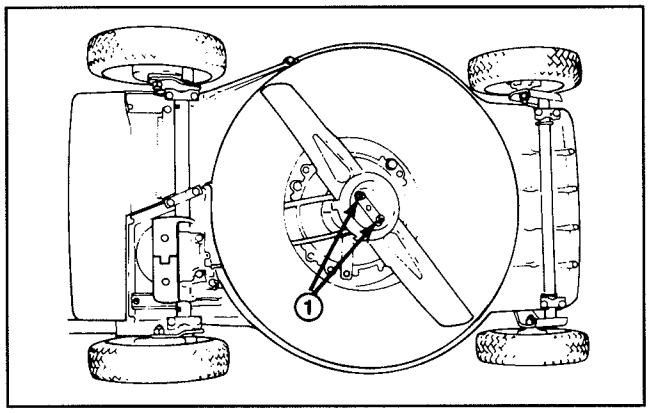

Figure 21

1. **Blade nuts**

4. INSPECTING BLADE—Carefully examine blade for sharpness and wear, especially where flat and curved parts meet (Fig. 22A). Since sand and abrasive material can wear away the metal that connects the flat and curved parts of the blade, check blade before using the mower. If a slot or wear is noticed, (Fig. 22B & C), replace blade with a new TORO blade. Refer to step 5.

Note: For optimum performance, install a new TORO blade before cutting season begins. During the year, file down small nicks to maintain the cutting edge.

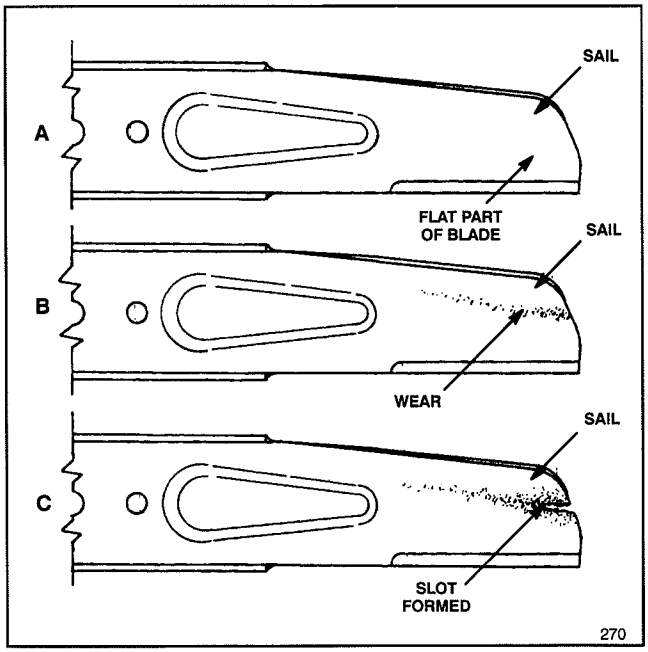

Figure 22

5. REMOVING BLADE—Grasp end of blade using a rag or thickly padded glove. Remove (2) blade nuts, (2) washers, anti–scalp cup, and blade (Fig. 21 & 23).

⚠ DANGER

- **A worn or damaged blade could break and a piece of blade could be thrown into operator's or bystander's area.**
- **A thrown piece of blade could cause serious personal injury or death to operator or bystanders.**
- **Inspect blade periodically for wear or damage.**
- **Replace a worn or damaged blade.**

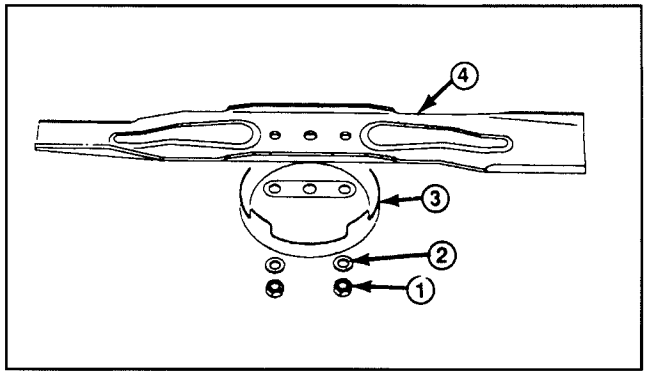

Figure 23

1. **Blade nut**
2. **Washer**
3. **Anti–scalp cup**
4. **Blade**

6. SHARPENING BLADE—Using a file, sharpen top side of blade (side facing top of mower housing) and maintain original cutting angle (Fig. 24). The blade remains balanced if the same amount of material is removed from both cutting edges.

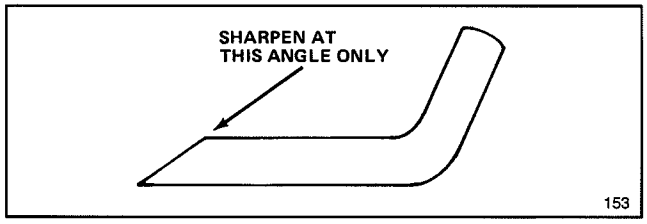

Figure 24

IMPORTANT: Check balance of blade by putting it on a blade balancer. An inexpensive balancer can be purchased at a hardware store. A balanced blade stays in a horizontal position and an unbalanced blade settles to the heavy side. If blade is not balanced, file more metal off cutting edge on heavy end of blade.

7. Install sharp, balanced TORO blade, anti–scalp cup, (2) washers, and (2) blade nuts. Sail part of blade must point toward top of mower housing to assure correct installation. Tighten blade nuts to 20–35 N·m (15–25 ft–lb).

LUBRICATION

After every 25 operating hours or when season ends, front and rear wheels must be lubricated.

1. Apply one to two drops of light oil on inside and outside of all wheel bolts. Spin wheels to distribute oil into bushings. Wipe up excess oil.

2. Tip the mower on its left side. Wipe grease fittings with clean rag (Fig. 25). Install grease gun onto fitting and gently apply one or two pumps of #2 Multi–Purpose Lithium Base Grease.

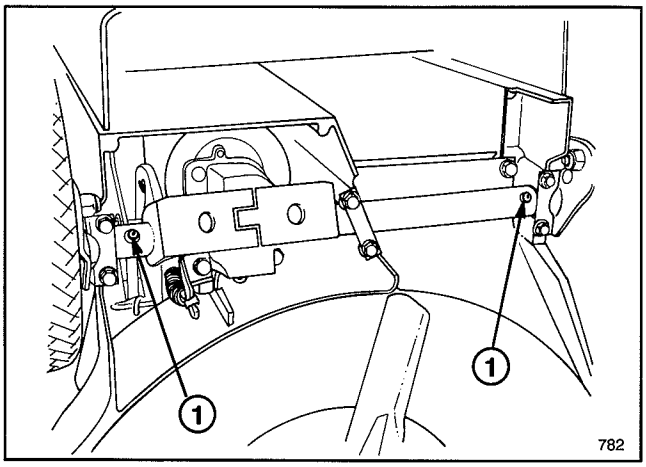

Figure 25

1. **Grease fitting (self–propelled model)**

CHARGING BATTERY (electric start model)

Although a new battery is not fully charged, a partial charge of 4 hours provides enough energy for several starts. However, a new battery must be charged for 72 continuous hours to assure full charge. Also charge battery for 72 hours when mower is stored and in the spring. During normal operation, charge battery for 48 hours once every month or as needed.

1. Stop engine and disconnect wire harness from battery terminal (Fig. 26).

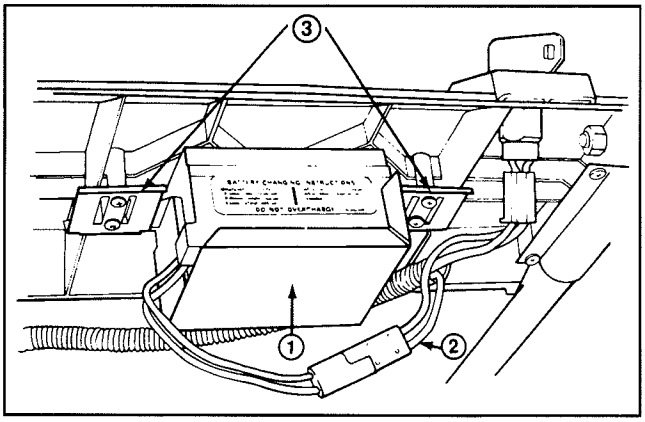

Figure 26

1. **Battery**
2. **Wire harness**
3. **Mounting tabs**

2. If desired, battery can be removed by sliding it out of mounting tabs. However, removal is not required if mower can be positioned near an electrical outlet.

MAINTENANCE

3. Connect TORO electro charger to battery and plug into 220VAC power outlet. After charging battery for 72 hours, unplug charger and disconnect from battery.

4. Connect wiring harness to battery terminal.

IMPORTANT: Only the TORO electro charger is recommended because other chargers could damage the battery. Always use charger indoors and charge battery at room temperature (22°C or +70°F) whenever possible. Do not charge battery longer than 72 hours because damage could result.

CLEANING MOWER HOUSING

To assure best performance, keep underside of mower housing and inside of discharge area clean.

1. Stop engine and pull wire off spark plug. For electric start model, remove key from switch.

2. Drain gasoline from fuel tank: refer to Draining Gasoline, page 9.

3. Tip mower on its left side (Fig. 27). Avoid rotating blade because starting problems may result.

4. Remove dirt and grass clippings that stick to housing by spraying it with a garden hose. Scrape out remaining debris with hardwood scraper. Avoid burrs and sharp edges.

5. Clean discharge door and hinges of grass or debris that may impair operation of door.

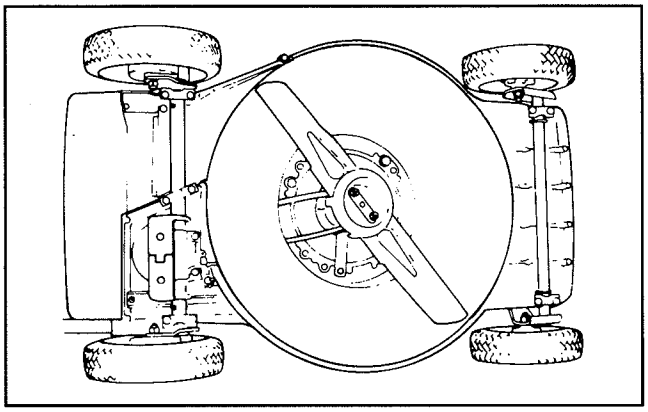

Figure 27

PREPARING MOWER FOR STORAGE

1. For long term storage, it is recommended that gasoline be drained from fuel tank or use a fuel additive before storing. To drain gasoline, refer to Draining Gasoline, page 9. After fuel is drained, start engine and let it idle until all fuel is consumed and engine stops. If gasoline is not drained, gum–like varnish deposits will form and cause poor engine operation or even starting problems.

Fuel can be left in gas tank only if a fuel additive, such as Toro's Stabilizer/Conditioner, is added to gasoline and run through engine before storing. Toro's Stabilizer/Conditioner is a petroleum distillate based conditioner/stabilizer. Toro does not recommend stabilizers with an alcohol base, such as ethanol, methanol or isopropyl. Use fuel additive in recommended quantities as specified on container.

Under normal conditions, fuel additives remain effective in fuel for 6-8 months.

2. Drain oil: refer to Changing Crankcase Oil, page 9. After oil is drained, do not fill crankcase with oil until the following steps (3–10) are completed.

3. Remove spark plug and pour 30 ml (2 tablespoons) of SAE 30 oil into hole in cylinder. Pull starter rope slowly to coat inside of cylinder. Install spark plug and tighten to 15 ft–lb (20 N·m). **DO NOT INSTALL WIRE ON SPARK PLUG.**

4. Clean mower housing; refer to Cleaning Mower Housing, page 12.

5. Check condition of blade; refer to Inspecting/Removing/Sharpening Blade, page 10.

6. Tighten all nuts, bolts, and screws.

7. Clean dirt, chaff, grass clippings, and grime from external parts of the engine, shrouding, and top of mower housing.

8. Clean air cleaner; refer to Servicing Air Cleaner, page 8.

9. Lubricate the wheels; refer to Lubrication, page 11.

10. Touch up all rusted or chipped paint surfaces. Toro Re–Kote paint is available from an Authorized TORO Service Dealer.

11. Fill crankcase with oil; refer to Fill Crankcase With Oil, page 5.

12. Charge battery for 72 hours; refer to Charging Battery, page 11.

13. Store mower in a clean, dry place. Cover mower to keep it clean and protected.

PRODUCT IDENTIFICATION

A model and a serial number decal is located on right side of mower housing ahead of discharge tunnel. Always refer to specific numbers on this decal in correspondence or when replacement parts are needed.

TORO SERVICE SUPPORT

If help – concerning safety, set–up, operation, maintenance, or troubleshooting – is ever needed, contact the local Authorized TORO Service Dealer or Distributor. In addition to skilled service technicians, the dealer and distributor have factory approved accessories and replacement parts. Keep your Toro all TORO. Buy genuine TORO replacement parts and accessories.

THE TORO STARTING GUARANTEE

A Five Year Limited Warranty
On The Toro GTS 150 OHV Engine

What Is Covered?

The Toro Company guarantees that your TORO GTS 150 Engine will start on the first or second pull for five years from the date of purchase—if you provide the routine maintenance it requires—or we will fix it. The cost of parts and labor are included, but you must pay transportation costs. This covers TORO GTS 150 engines purchased after September 1, 1991.

What Must You Do To Keep The Warranty In Effect?

You must maintain your TORO GTS 150 Engine by following the maintenance schedule detailed in the Operator's Manual, at your expense. You must record this work in the maintenance chart provided and keep your proof of purchase. You will also need to have your TORO GTS 150 engine serviced annually by an Authorized TORO Service Dealer.

How Do You Get Service?

If the starting performance of your TORO GTS 150 Engine should diminish to the point where it will not start in one or two pulls by a normal, able-bodied adult, you should follow the procedures below:

1. Contact any Authorized TORO Service Dealer or the TORO Distributor.
2. He will either instruct you to return the product to him or recommend another Authorized TORO Service outlet which might be more convenient.
3. Take the product, your maintenance records, and proof of purchase to the Service Dealer.

If, for any reason, you are dissatisfied with the Dealer's analysis of your engine's starting condition, or the assistance provided, please contact your TORO distributor:

What Does This Warranty Not Cover?

This Warranty does not cover:

1. Any repairs on products used commercially.
2. Normal maintenance including replacement of spark plugs, air filter, fuel filter, and carburetor adjustments.
3. Oil change and lubrication.
4. Repairs or adjustments due to:
   a. Failure to follow proper maintenance procedures;
   b. Rotary mower blade striking an object;
   c. Contaminants in the fuel system;
   d. Improper fuel or fuel mixture (consult your owner's manual if in doubt);
   e. Failure to follow the proper storage procedures as specified in the Operator's Manual;
   f. Operation misuse, neglect or accidents;
   g. Repairs or attempted repairs by anyone other than an Authorized TORO Service Dealer.
5. Special operational conditions where starting may require more than two pulls, including:
   a. First time starts after extended period of non-use or seasonal storage;
   b. Cool temperature starts such as those found in early spring and late autumn may require an additional pull or two (applies to rotary products only);
   c. Improper starting procedures. If you are having difficulty starting your unit, please check the operator's manual to ensure you are using the correct starting procedures. This can save an unnecessary visit to a Service Dealer.

All warranty repairs reimbursable under this warranty must be performed by an Authorized TORO Service Dealer using Toro approved replacement parts.

The above remedy through repair by an Authorized TORO Service Dealer is the purchaser's sole remedy.

GUARANTEED TO START MAINTENANCE RECORD

To keep the starting guarantee in effect, you must perform the following maintenance after every 25 operating hours, more often in dusty and dirty conditions. Follow the procedures in this Operator's Manual and record information on this chart.

Date	Hours Used	Air Cleaner Service	Change Oil Doesn't Apply to 2–Cycle	Lubricate Wheels	Check Spark Plug	Mower Storage


TORO®