FORM NO. 3316–160

TORO®

MODEL NO. 16212B–3900001 & UP

PARTS CATALOG

21" SIDE DISCHARGE MOWER

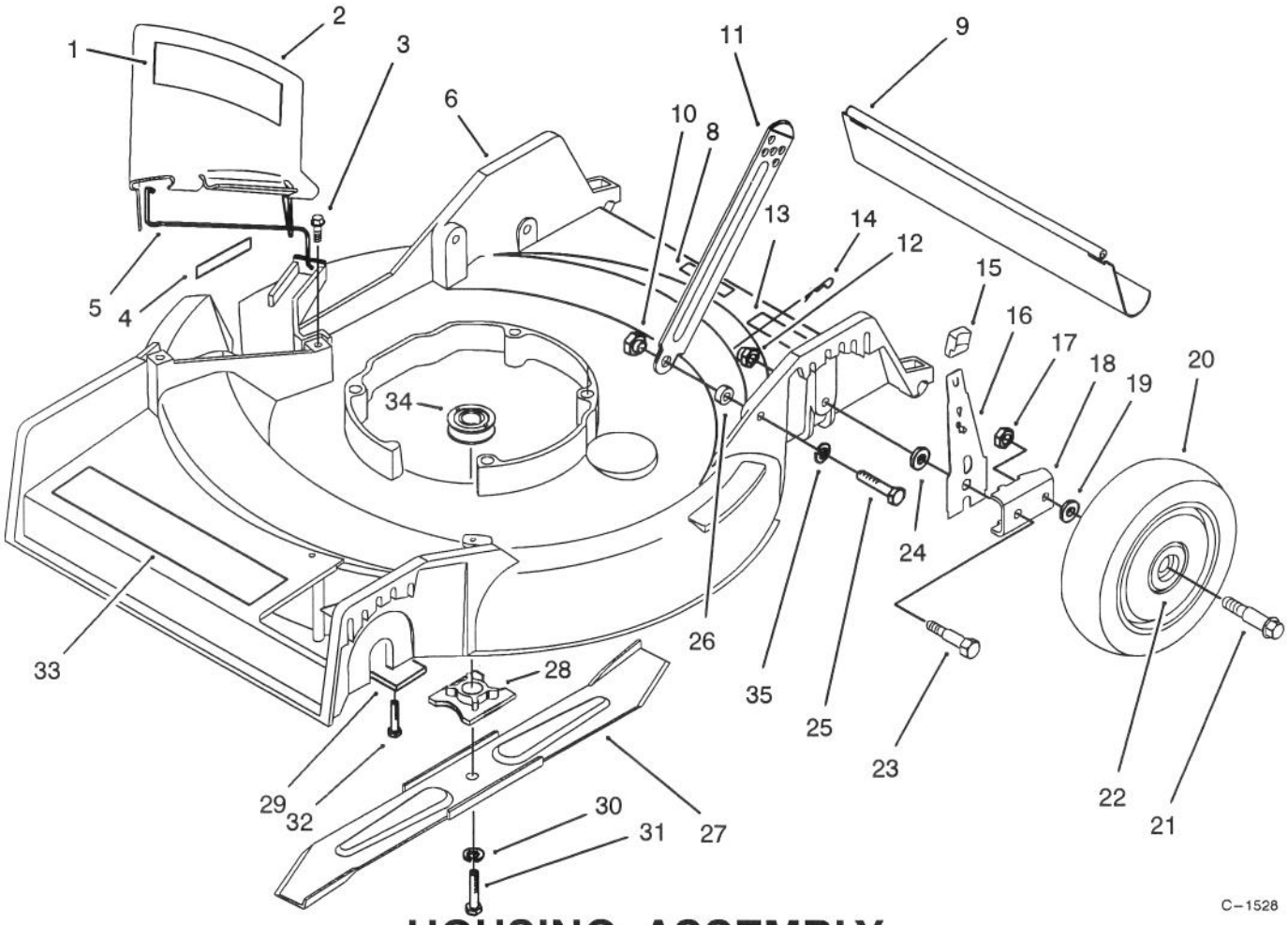

C–1528

HOUSING ASSEMBLY

Ref. No.	Part No.	Description	No. Used
1	62–4210	Decal – Danger	1
2	13–5909	Deflector (Incl. Ref. #1 & 5)	1
3	46–6811	Screw – Washer Hd.	2
4	62–4200	Decal – Danger	1
5	20–2640	Spring – Hinge	1
6	13–3489	Housing (Incl. Ref. #4)	1
8	66–0680	Decal – French Regulation	1
9	66–5990	Shield – Rear	1
10	27–6520	Nut – Shoulder	2
11	82–7620	Latch – Handle	2
12	12–2080	Nut – Shoulder	2
13	66–2000	Decal – Noise Rating	1
14	3290–255	Hairpin Cotter	2
15	25–7740	Knob – Spring Arm	2

Ref. No.	Part No.	Description	No. Used
16	66–9260	Spring Arm Assembly L.H.	1
*	66–9250	Spring Arm Assembly R.H.	1
17	3296–6	Locknut	2
18	47–2940	Pivot Arm Assembly	2
19	40–1940	Washer – Wheel Bolt	2
20	11–9509	Wheel & Tire Assembly (Incl. Ref. #22)	2
21	27–6231	Bolt – Wheel	2
22	27–6250	Bushing	4
23	44–5271	Screw – Pivot	2
24	33–0390	Washer – Pivot	2
25	322–7	Screw – Cap, Hex Hd.	2
26	3–3287	Spacer – Handle Latch	2
27	20–2720	Blade – 21"	1
28	49–7900	Retainer – Blade	1
29	67–9880	Shield – Front	1

*Not Illustrated

©The Toro Company – 1993
All Rights Reserved

TPS

3316–160

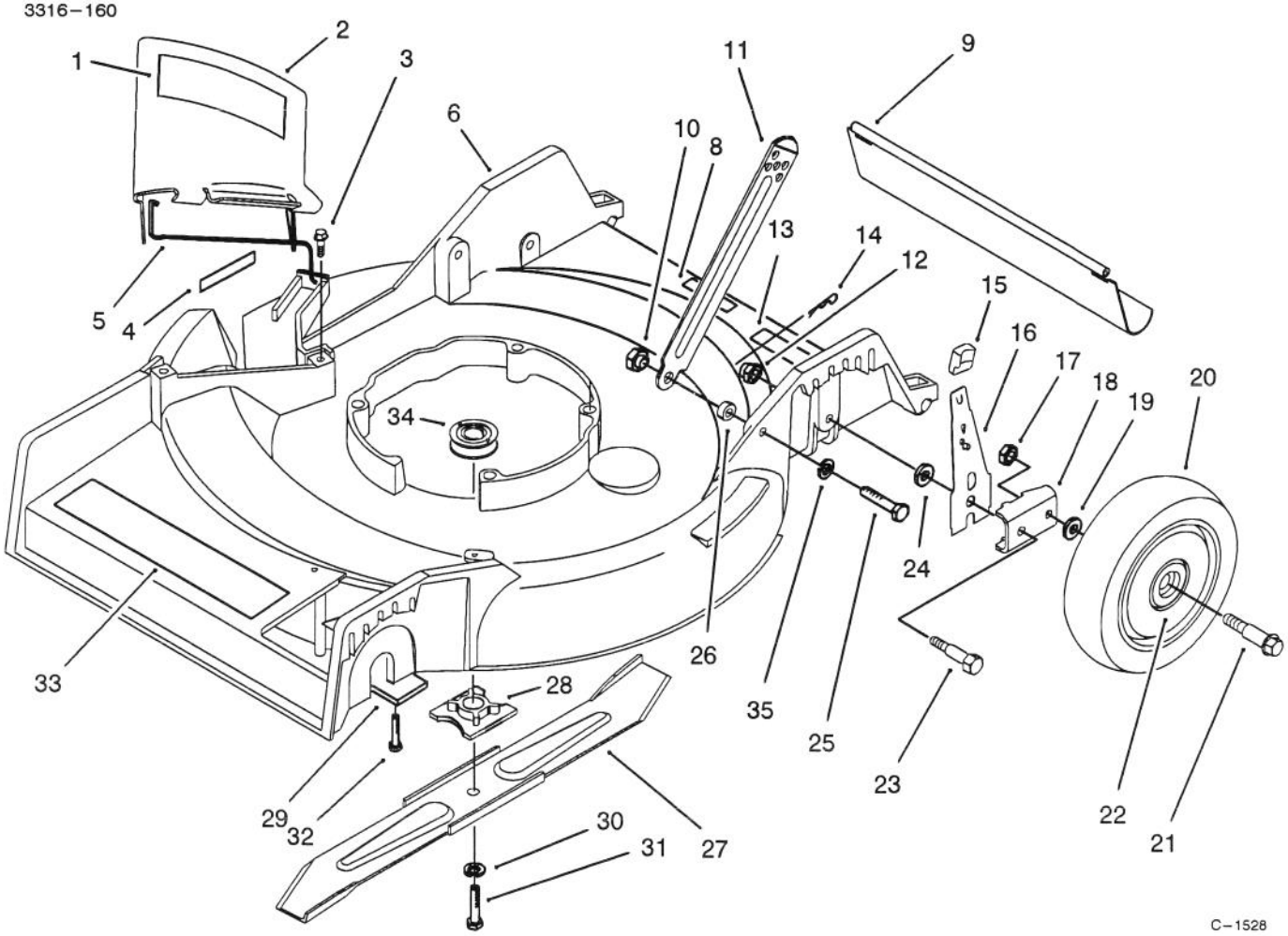

C–1528

HOUSING ASSEMBLY (Continued)

Ref. No.	Part No.	Description	No. Used
30	3253–22	Washer – Lock	1
31	26–0671	Screw – Blade	1
32	32144–70	Screw	4

Ref. No.	Part No.	Description	No. Used
33	70–1590	Decal – 53	1
34	46–7910	Pulley – Driver	1
35	3253–4	Washer – Lock	2

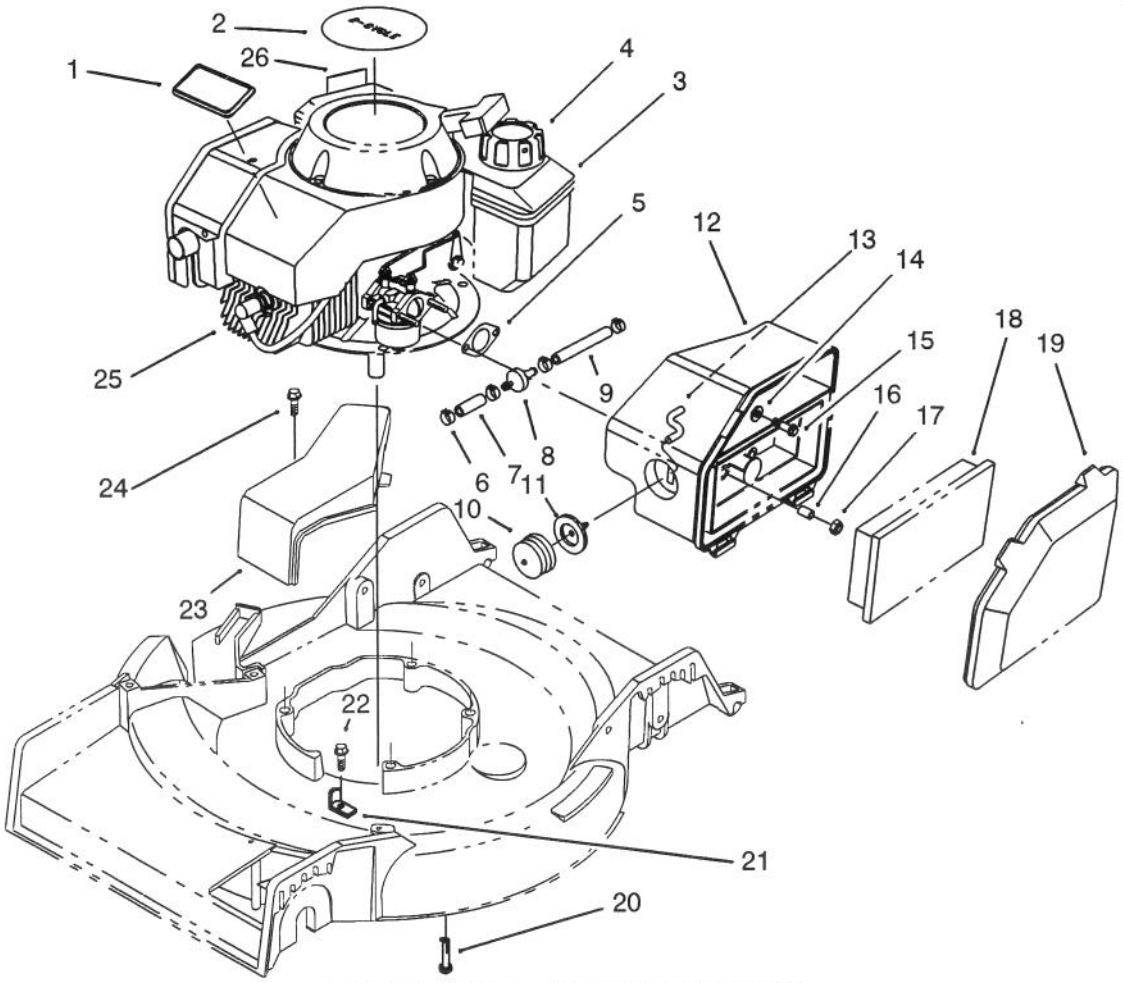

C–1529

ENGINE ASSEMBLY

Ref. No.	Part No.	Description	No. Used
1	46–8290	Plate – Toro Logo	1
2	57–3110	Decal – Recoil	1
3	81–0162	Fuel Tank Assembly	1
4	55–3575	Gas Cap Assembly	1
5	81–0090	Gasket – Air Cleaner	1
6	2412–95	Clamp – Fuel Line	4
7	51–3216	Fuel Line	1
8	56–6360	Filter – Fuel	1
9	51–3215	Fuel Line	1
10	66–7460	Bulb – Primer	1
11	44–2750	Body – Primer	1
12	63–9330	Air Cleaner	1
13	44–3172	Hose – Primer	1

Ref. No.	Part No.	Description	No. Used
14	3256–16	Washer – Flat	1
15	51–2690	Screw – Washer Hd.	1
16	62–3980	Sleeve	2
17	50–7180	Locknut	2
18	63–9380	Foam Element – Air Cleaner	1
19	63–9340	Cover – Air Cleaner	1
20	66–9302	Capscrew – Hex Hd.	3
21	70–8080	Clamp – Cable	1
22	32144–70	Screw – Thread Forming	1
23	46–4780	Cover – Belt	1
24	32144–112	Screw – Thread Forming	2
25	51–0413	Engine (Complete)	1
26	40–2440	Decal – Maintenance	1

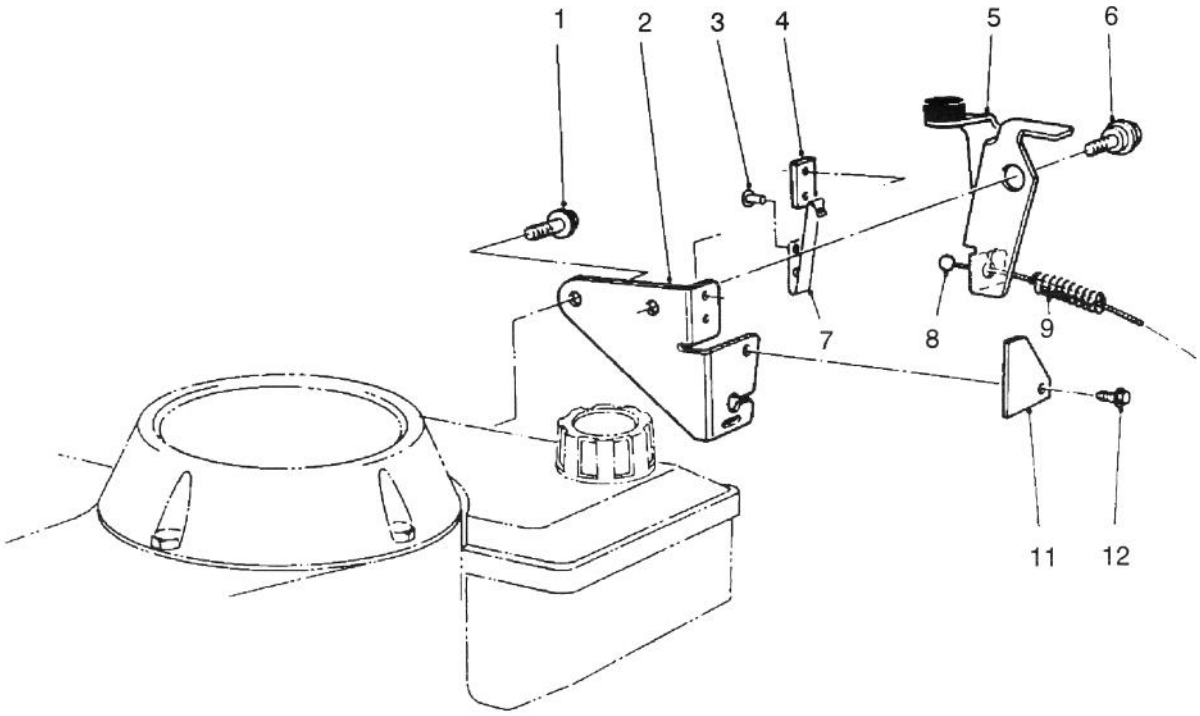

C–1530

BRAKE ASSEMBLY

Ref. No.	Part No.	Description	No. Used
1	46–0790	Screw – Self Tapping	1
2	14–6009	Plate – Mounting Assembly (Incl. Ref. #3, 4 & 7)	1
3	3290–459	Rivet	2
4	77–5260	Strap – Insulation	1
5	66–5380	Brake Plate Assembly	1

Ref. No.	Part No.	Description	No. Used
6	56–6190	Screw – Shoulder, Metric	1
7	60–9010	Strap – Ground	1
8	85–6902	Cable – Brake	1
9	66–5370	Spring – Compression	1
11	53–4690	Stop – Ground Strap	1
12	32144–112	Screw – Self Tapping	1

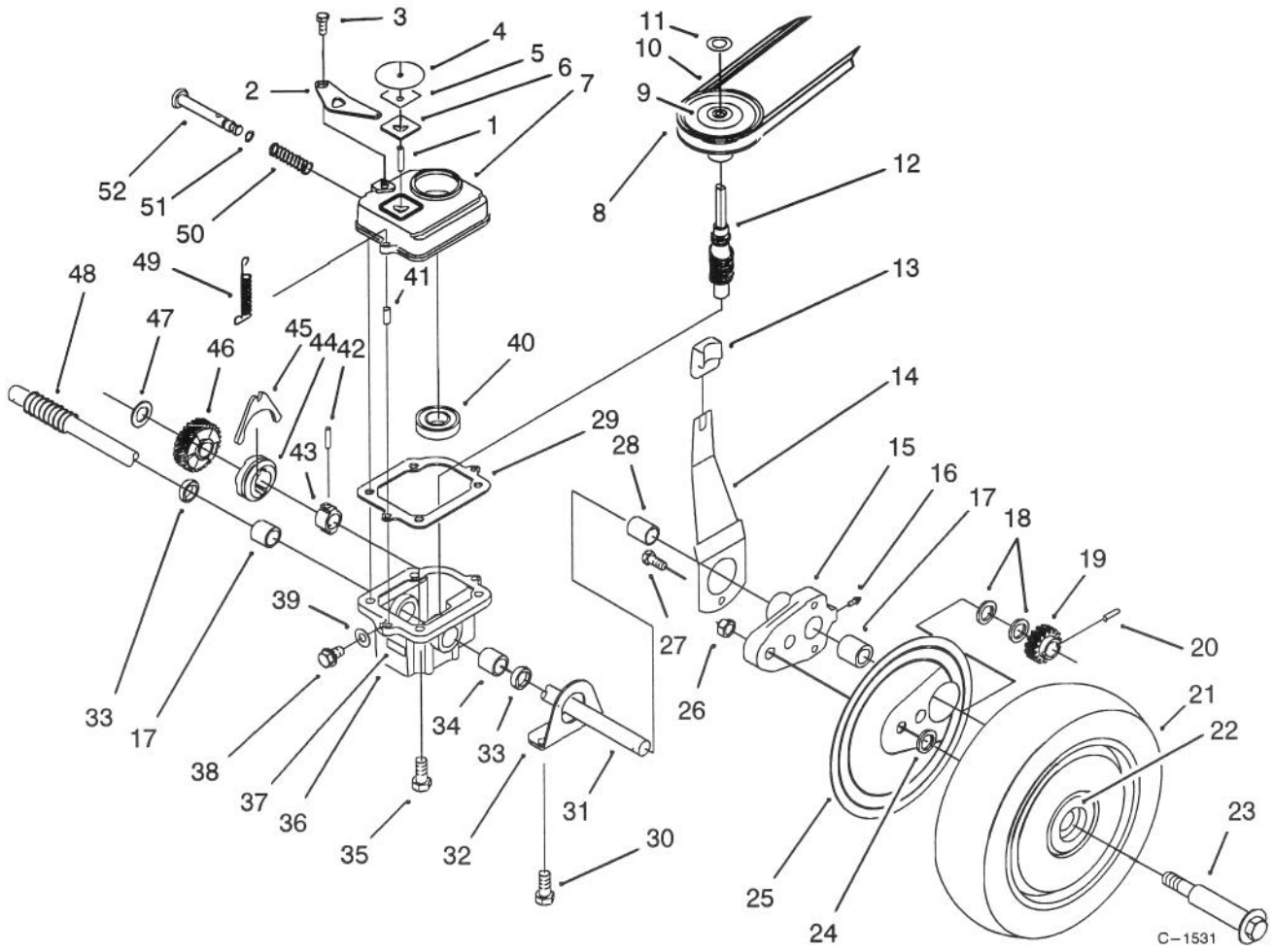

GEAR CASE ASSEMBLY

Ref. No.	Part No.	Description	No. Used
1	32121–114	Pin – Roll	1
2	5–3252	Arm – Shifter	1
3	32140–64	Screw – Self Tapping	1
4	52–7380	Cover – Dust, Transmission	1
5	52–7370	Filter – Dust	1
6	3–0681	Plate – Latch	1
7	39–1101	Cover – Gear Case	1
8	18–9760	Pulley	1
9	33–2450	Decal – Caution	1
10	5–4505	V–Belt	1
11	3290–346	Retainer – Push On	1
12	8–5679	Worm Shaft & Gear (Incl. Ref. #46)	1
13	25–7740	Knob – Arm	2
14	67–9370	Arm – Spring	2
15	66–6001	Arm – Pivot (Incl. Ref. #16, 17 & 28)	2
16	302–56	Fitting – Grease	2
17	47–2900	Bushing	3
18	46–6510	Washer – Thrust	4
19	46–6520	Gear – Pinion	2
20	32121–98	Pin – Coil	2
21	11–9519	Wheel, Tire & Gear Assy (Incl. Ref. #22)	2
22	27–6250	Bushing – Wheel	4
23	27–6231	Bolt – Wheel	2

Ref. No.	Part No.	Description	No. Used
24	40–1940	Washer – Wheel Bolt	2
25	63–5270	Cover – Wheel	2
26	3296–6	Nut	2
27	63–8590	Screw – Button Hd	2
28	70–9760	Bushing	2
29	36–1000	Gasket – Gear Case	1
30	32144–70	Screw – Thread Forming	4
31	66–6020	Shaft – Drive	1
32	68–9000	Cap – End	2
33	47–6730	Seal – Oil	2
34	47–2890	Bushing	1
35	11–9760	Screw	4
36	8–0479	Gear Case (Incl. Ref. #17, 23 & 34)	1
37	40–4755	Decal – Gear Box	1
38	28–1550	Screw – Nylon	1
39	46–9640	Gasket	1
40	47–7250	Bearing – Ball	1
41	32121–1	Pin – Roll	2
42	32121–88	Pin – Coil	1
43	3–0721	Sleeve	1
44	19–5660	Jaw – Clutch	1
45	5–3247	Fork – Shifter	1
46		Gear – Helical	1
47	3–0724	Washer – Thrust	1
48	24–7920	Cover – Drive Shaft	1

3316–160

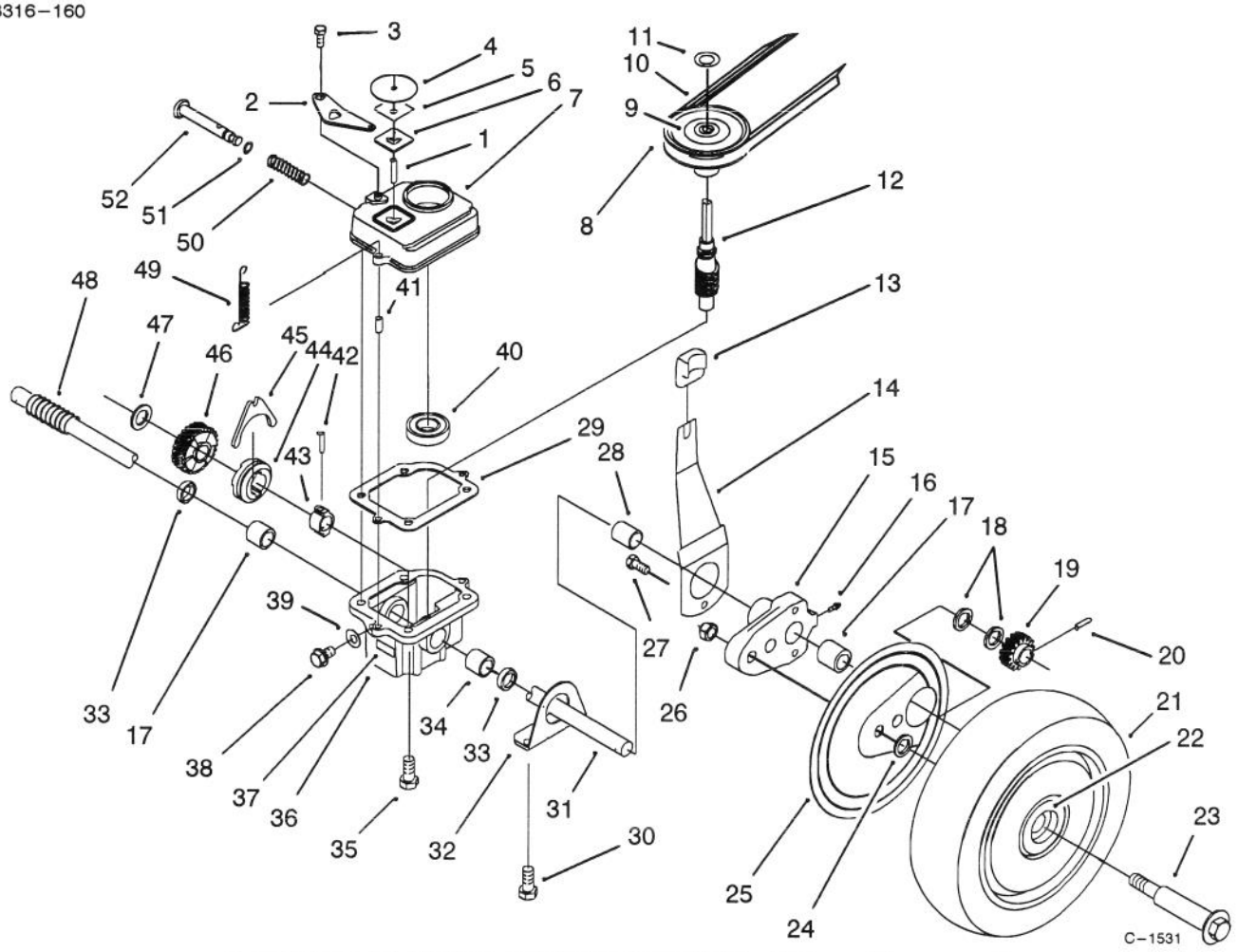

GEAR CASE ASSEMBLY (Continued)

Ref. No.	Part No.	Description	No. Used
49	17–4490	Spring – Tension, Belt	1
50	3–0731	Spring	1
51	237–137	O–Ring	1
52	46–8240	Rod – Shifter	1
*	13–3479	Gear Case Assembly (Complete)	1

Ref. No.	Part No.	Description	No. Used
*	27–0490	Bearing & Shaft Tool	1
*†	39–9640	Metric Bearing Tool	1
*	27–0460	Tool – Bushing	1

*Not Illustrated
†Use with 27–0490 Bearing & Shaft Tool

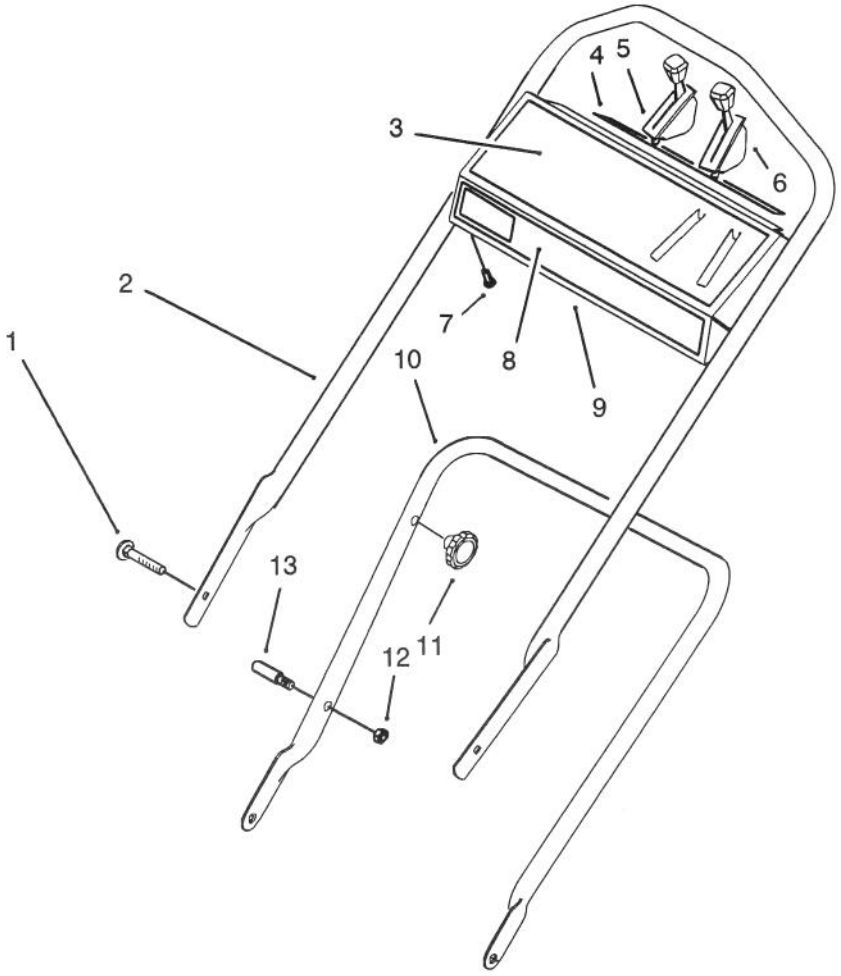

C–1532

HANDLE ASSEMBLY

Ref. No.	Part No.	Description	No. Used
1	17–9421	Screw – Handle	2
2	84–8332	Handle – Upper	1
3	66–1840	Decal – Instructions	1
4	66–1790	Decal – Danger	1
5	46–6884	Control – Traction Bend Type 3 Sheath Lg. 53"(134.6 cm) Wire Lg. 2 1/2"(6.4 cm)	1
6	49–4197	Control – Throttle/Choke Bend Type 2 Sheath Lg. 41"(104.1 cm) Wire Lg. 2 1/4"(5.7 cm)	1

Ref. No.	Part No.	Description	No. Used
7	32104 –76	Screw – Self Tapping	5
8	66–1770	Decal – Toro	1
9	13–3469	Panel – Control (Incl. Ref. #4 & 28)	1
10	49–1690	Handle – Lower	1
11	19–4050	Knob – Handle	2
12‡	3296–47	Locknut	2
13‡	49–2750	Pin – Handle	2

‡Service Replacement Parts

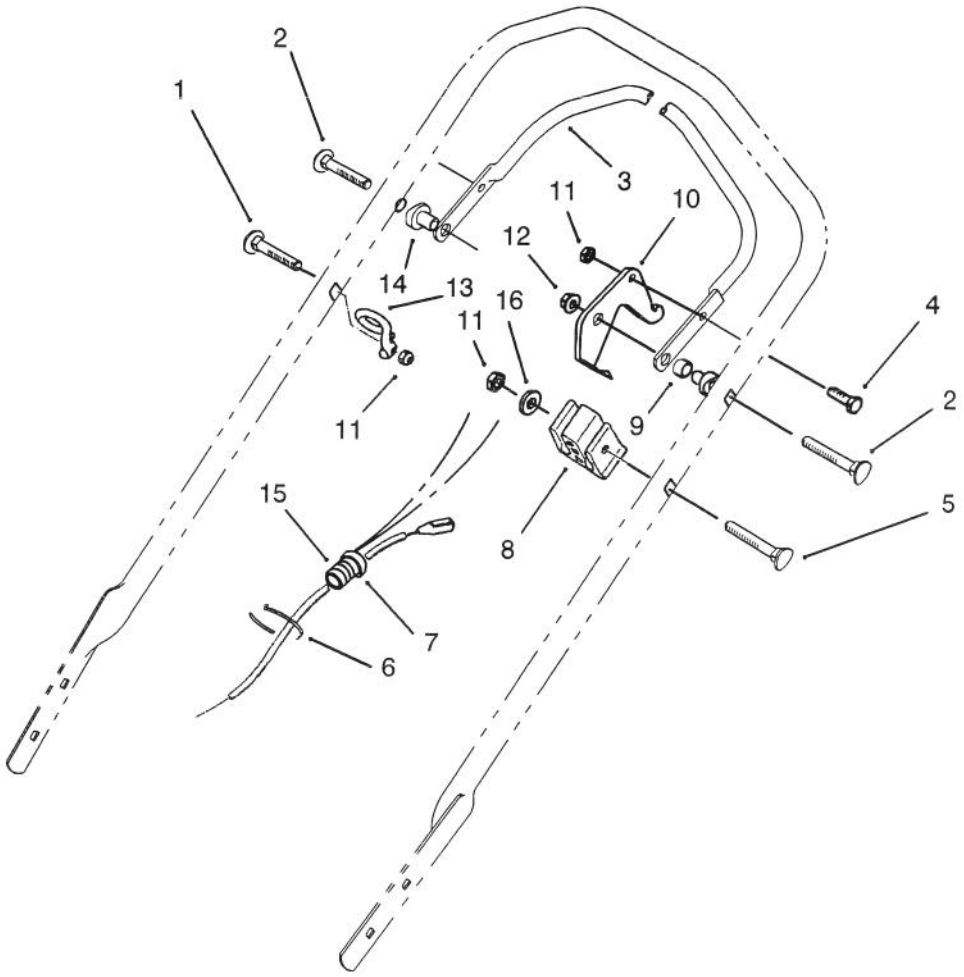

C–1533

TRACTION ASSEMBLY

Ref. No.	Part No.	Description	No. Used
1	46–6433	Screw – Handle	1
2	17–9421	Screw – Handle	2
3	52–7430	Control Bar Assembly	1
4	321–3	Screw – Cap, Hex Hd.	1
5	46–6434	Screw – Handle	1
6	3290–378	Cable Tie	2
7	2412–50	Clip – Convoluted Tubing	4
8	46–6980	Support – Cable	1

Ref. No.	Part No.	Description	No. Used
9	256–276	Spacer – Nylon	1
10	66–5350	Lever – Control	1
11	3296–42	Locknut	3
12	3296–58	Locknut	2
13	46–8080	Guide – Rope	1
14	49–1630	Support – Spacer	2
15	46–6441	Cover – Control Cable	1
16	3256–22	Washer – Flat	1

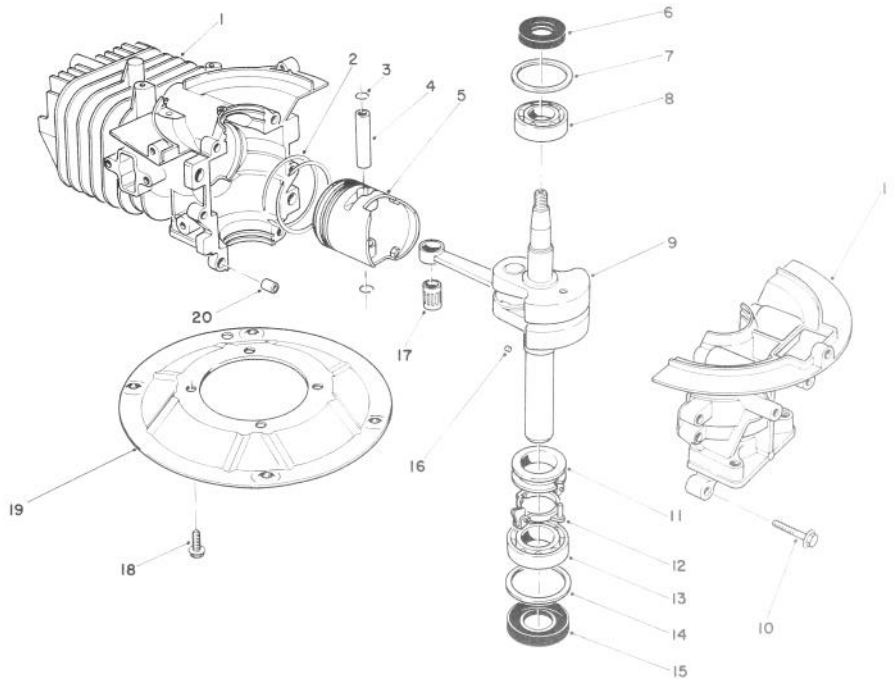

C–0190

CRANK SHAFT ASSEMBLY (Model No. 47PN2–1)

Ref. No.	Part No.	Description	No. Used
1	81–2800	Crankcase/Cylinder Ass'y	1
2	81–0590	Ring Set	1
3	81–0620	Circlip	2
4	81–0600	Pin – Wrist	1
5	81–0580	Piston (58mm)	1
6	81–0720	Oil Seal – Upper	1
7	81–0710	Thrust Washer – Upper	1
8	81–0690	Bearing – Upper (20mm)	1
9	81–4600	Crankshaft/Connecting Rod Assembly	1
10	81–0540	Bolt (30mm Lg.)	6

Ref. No.	Part No.	Description	No. Used
11	81–0770	Spacer – Governor	1
12	81–0750	Bracket – Governor Arm	1
13	81–0700	Bearing – Lower (25mm)	1
14	81–0730	Thrust Washer – Lower	1
15	81–0740	Oil Seal – Lower	1
16	81–0760	Pin – Crankshaft	1
17	81–0610	Bearing – Wrist Pin	1
18	81–0570	Bolt (20mm Lg.)	4
19	81–0560	Plate – Mounting	1
20	81–0520	Pin – Crankcase	2
*	12–7699	Short Block Assembly	1

*Not Illustrated

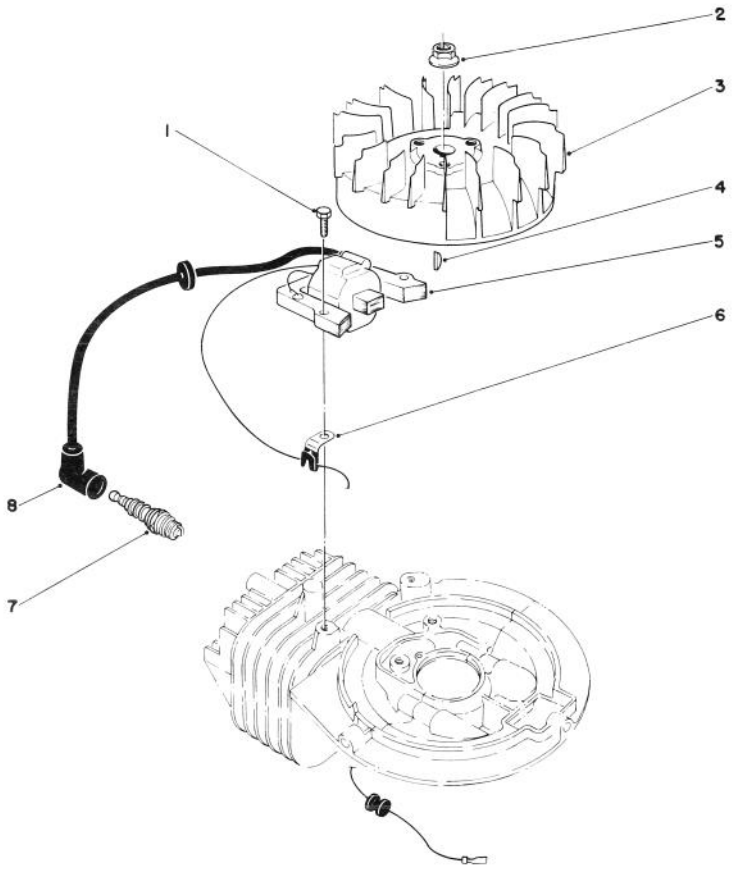

C–0176

IGNITION ASSEMBLY (Model No. 47PN2–1)

Ref. No.	Part No.	Description	No. Used
1	81–5680	Capscrew – Hex Hd.	2
2	81–1330	Nut	1
3	81–2810	Flywheel – Magneto	1
4	81–2370	Key – Flywheel	1
5	81–2820	Coil/Ignition Assembly	1

Ref. No.	Part No.	Description	No. Used
6	81–1480	Clamp	1
7	81–0181	Spark Plug	1
8	81–1500	Cover – Spark Plug	1
*	41–7650	Puller – Flywheel	1

*Not Illustrated

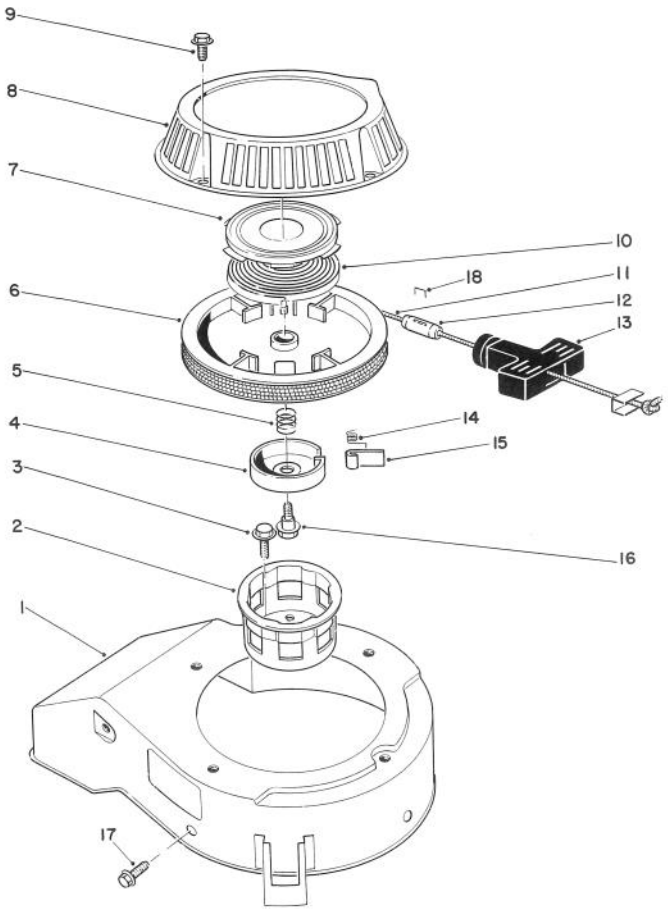

C–0178

RECOIL ASSEMBLY
(Model No. 47PN2–1)

Ref. No.	Part No.	Description	No. Used
1	81–2070	Cover – Cooling Fan	1
2	81–1290	Pulley – Starter Cup	1
3	81–1300	Bolt (16mm Lg.)	3
4	81–1250	Retainer – Dog	1
5	81–1240	Spring – Compression	1
6	81–1210	Reel – Rope Pulley	1
7		Retainer Cup – Recoil Spring	1
8	81–2090	Case – Recoil	1
9	81–1280	Bolt	4
10		Spring – Recoil	1
11	81–1270	Rope	1
12	47–2480	Stop – Recoil	1

Ref. No.	Part No.	Description	No. Used
13	81–1630	Handle – Recoil	1
14	81–1220	Spring – Dog	1
15	81–1230	Dog	1
16	81–1260	Bolt – Shoulder	1
17	81–1170	Bolt – Self Tapping (15mm Lg.)	1
†18		Staple	1
*	81–2040	Starter Assembly (Incl. Ref. #4–16)	1
*	81–2300	Spring & Retainer (Incl. Ref. #6 & 9)	1

*Not Illustrated
†Obtain Locally

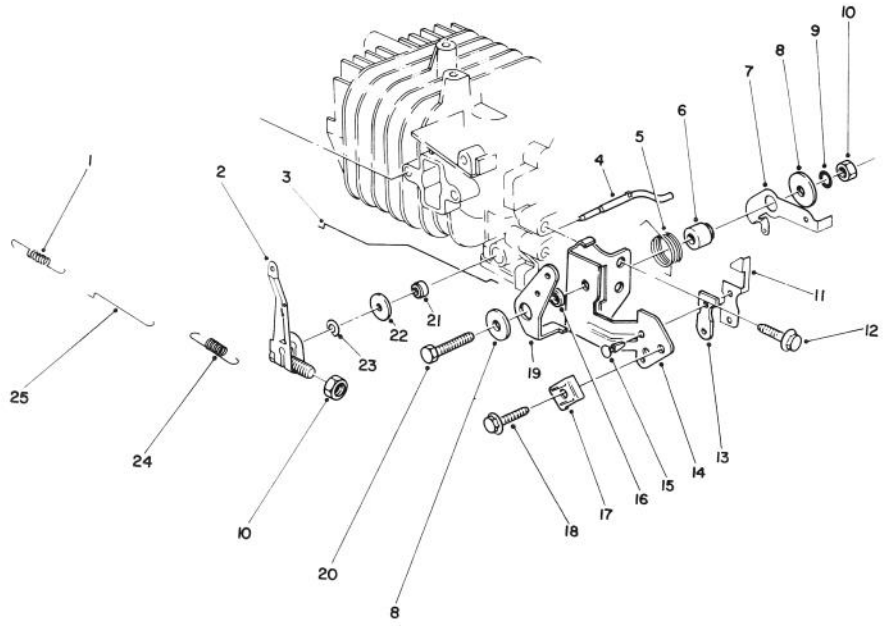

C–0192

GOVERNOR ASSEMBLY (Model No. 47PN2–1)

Ref. No.	Part No.	Description	No. Used
1	81–0920	Spring – Carburetor Rod	1
2	81–5420	Governor Arm/Bolt Ass'y	1
3	81–5410	Rod – Choke	1
4	81–2880	Shaft – Governor	1
5	81–2460	Spring – Choke Control Lever	1
6	81–1770	Spacer – Governor Spring Lever	1
7	81–2850	Lever – Governor Spring	1
8	81–1750	Washer – Choke Control Lever	2
9	81–1450	Washer – Lock	1
10	81–0900	Nut	2
11	81–1840	Terminal – Kill Switch	1
12	81–1170	Bolt – Self Tapping (15mm Lg.)	1

Ref. No.	Part No.	Description	No. Used
13	81–1830	Insulator – Kill Switch	1
14	81–2420	Bracket – Throttle Control	1
15	81–4530	Rivet – Kill Switch	2
16	81–2470	Spacer – Choke Control Lever	1
17	81–2430	Clamp – Cable	1
18	50–0130	Bolt – Cable Clamp	1
19	81–1710	Lever – Choke Control	1
20	81–1730	Bolt – Throttle Control Brkt.	1
21	81–0850	Oil Seal – Governor Shaft	1
22	81–0860	Washer	1
23	81–0870	E–Ring	1
24	81–2830	Spring – Governor	1
25	81–0910	Rod – Carburetor	1

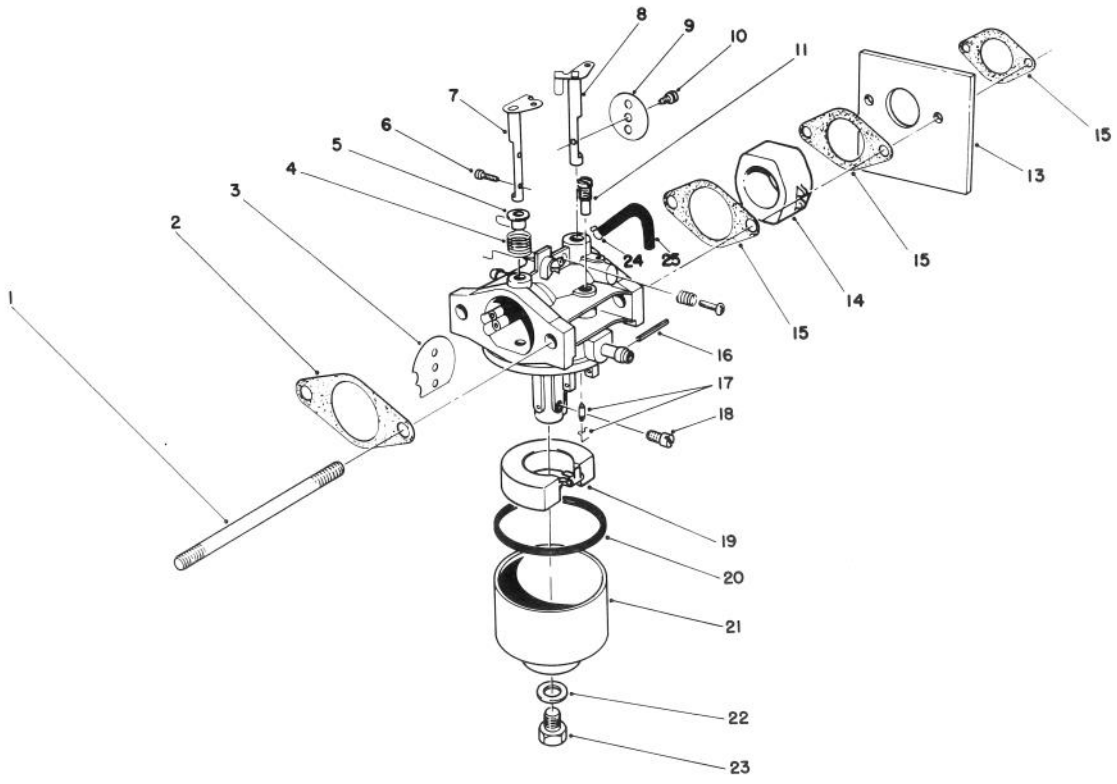

C–0191

CARBURETOR ASSEMBLY (Model No. 47PN2–1)

Ref. No.	Part No.	Description	No. Used
1	81–5450	Stud Bolt – Carburetor	2
2	81–0090	Gasket	2
3	81–0240	Valve – Choke	1
4	81–0230	Spring – Choke	1
5	81–0220	Bushing – Choke Valve	1
6	81–2160	Screw	2
7	81–1950	Shaft – Choke	1
8	81–0250	Shaft – Throttle	1
9	81–0260	Valve – Throttle	1
10	81–0270	Screw – Throttle Valve	1
11	81–1030	Jet – Pilot (#40)	1
13	81–5490	Shield – Carburetor	1
14	81–5440	Insulator – Carburetor	1
15	81–0780	Gasket	3
16	81–5600	Pin	1
17	81–4910	Needle Valve/Spring Wire	1
18	81–1060	Jet – Main (#75)	1
*	81–2340	Jet – Main (#72.5) High Alt., Above 6000 (Optional)	1

Ref. No.	Part No.	Description	No. Used
19	81–0970	Float	1
20	81–1010	Gasket – Float Bowl	1
21	81–5660	Bowl – Float	1
22	81–1020	Gasket – Bowl Screw	1
23	81–5670	Screw – Bowl	1
24	81–5460	Clamp – Vent Tube	1
25	81–5470	Tube – Vent	1
*	12–6379	Carburetor Kit (Incl. Ref. #2, 15, 17, 20, & 22)	1
*	81–5430	Carburetor Assembly – Complete	1
*	81–5810	Needle & Seat Kit (Incl. Valve Seat & Ref. #17)	1

*Not Illustrated

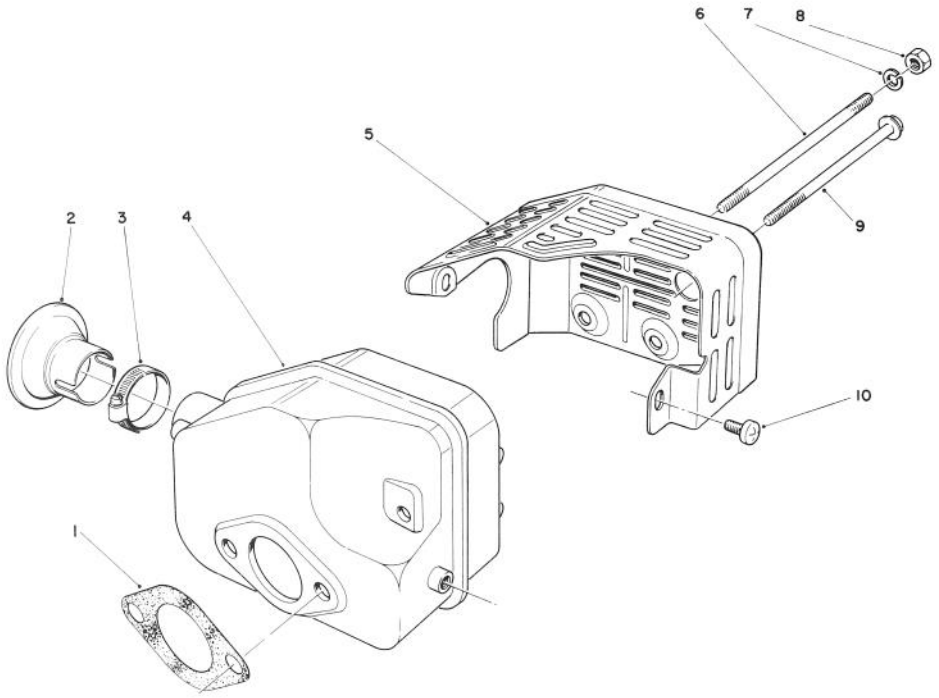

T–0667

MUFFLER ASSEMBLY (Model No. 47PN2–1)

Ref. No.	Part No.	Description	No. Used
1	81–1080	Gasket – Muffler	1
*2	81–0200	Spark Arrester	1
†3		Clamp	1
4	81–5690	Muffler	1
5	81–2450	Cover – Muffler	1

Ref. No.	Part No.	Description	No. Used
6	81–1100	Bolt	2
7	81–1120	Washer – Lock	2
8	81–1110	Nut	2
9	81–1150	Bolt – Self Tapping	1
10	81–1140	Screw – Phillips Hd.	2

*Optional Equipment
†Obtain Locally

TORO PART NUMBER INDEX

Part No.	Description	Pg. No.	Ref. No.	Qty.
3–0681	Plate – Latch	5	6	1
3–0721	Sleeve	5	43	1
3–0724	Washer – Thrust	5	47	1
3–0731	Spring	6	50	1
3–3287	Spacer – Handle Latch	1	26	2
5–3247	Fork – Shifter	5	45	1
5–3252	Arm – Shifter	5	2	1
5–4505	V–Belt	5	10	1
8–0479	Gear Case	5	36	1
8–5679	Worm Shaft & Gear	5	12	1
11–9509	Wheel & Tire Assembly	1	20	2
11–9519	Wheel, Tire & Gear Assy	5	21	2
11–9760	Screw	5	35	4
12–2080	Nut – Shoulder	1	12	2
12–6379	Carburetor Kit	13	*	1
12–7699	Short Block Assembly	9	*	1
13–3469	Panel – Control	7	9	1
13–3479	Gear Case Assembly	6	*	1
13–3489	Housing	1	6	1
13–5909	Deflector	1	2	1
14–6009	Plate – Mounting Assembly	4	2	1
17–4490	Spring – Tension, Belt	6	49	1
17–9421	Screw – Handle	7	1	2
17–9421	Screw – Handle	8	2	2
18–9760	Pulley	5	8	1
19–4050	Knob – Handle	7	11	2
19–5660	Jaw – Clutch	5	44	1
20–2640	Spring – Hinge	1	5	1
20–2720	Blade – 21	1	27	1
24–7920	Cover – Drive Shaft	5	48	1
25–7740	Knob – Arm	5	13	2
25–7740	Knob – Spring Arm	1	15	2
26–0671	Screw – Blade	2	31	1
27–0460	Tool – Bushing	6	*	1
27–0490	Bearing & Shaft Tool	6	*	1
27–6231	Bolt – Wheel	1	21	2
27–6231	Bolt – Wheel	5	23	2
27–6250	Bushing	1	22	4
27–6250	Bushing – Wheel	5	22	4
27–6520	Nut – Shoulder	1	10	2
28–1550	Screw – Nylon	5	38	1
33–0390	Washer – Pivot	1	24	2
33–2450	Decal – Caution	5	9	1
36–1000	Gasket – Gear Case	5	29	1
39–1101	Cover – Gear Case	5	7	1
39–9640	Metric Bearing Tool	6	*	1
40–1940	Washer – Wheel Bolt	1	19	2
40–1940	Washer – Wheel Bolt	5	24	2
40–2440	Decal – Maintenance	3	26	1
40–4755	Decal – Gear Box	5	37	1
41–7650	Puller – Flywheel	10	*	1
44–2750	Body – Primer	3	11	1
44–3172	Hose – Primer	3	13	1
44–5271	Screw – Pivot	1	23	2
46–0790	Screw – Self Tapping	4	1	1
46–4780	Cover – Belt	3	23	1
46–6433	Screw – Handle	8	1	1
46–6434	Screw – Handle	8	5	1
46–6441	Cover – Control Cable	8	15	1
46–6510	Washer – Thrust	5	18	4
46–6520	Gear – Pinion	5	19	2
46–6811	Screw – Washer Hd.	1	3	2
46–6884	Control – Traction	7	5	1
46–6980	Support – Cable	8	8	1
46–7910	Pulley – Driver	2	34	1
46–8080	Guide – Rope	8	13	1
46–8240	Rod – Shifter	6	52	1
46–8290	Plate – Toro Logo	3	1	1
46–9640	Gasket	5	39	1
47–2480	Stop – Recoil	11	12	1
47–2890	Bushing	5	34	1
47–2900	Bushing	5	17	3
47–2940	Pivot Arm Assembly	1	18	2
47–6730	Seal – Oil	5	33	2
47–7250	Bearing – Ball	5	40	1
49–1630	Support – Spacer	8	14	2
49–1690	Handle – Lower	7	10	1
49–2750	Pin – Handle	7	13	2
49–4197	Control – Throttle/Choke	7	6	1
49–7900	Retainer – Blade	1	28	1
50–0130	Bolt – Cable Clamp	12	18	1
50–7180	Locknut	3	17	2
51–0413	Engine (Complete)	3	25	1
51–2690	Screw – Washer Hd.	3	15	1
51–3215	Fuel Line	3	9	1
51–3216	Fuel Line	3	7	1
52–7370	Filter – Dust	5	5	1
52–7380	Cover – Dust, Transmission	5	4	1
52–7430	Control Bar Assembly	8	3	1
53–4690	Stop – Ground Strap	4	11	1
55–3575	Gas Cap Assembly	3	4	1
56–6190	Screw – Shoulder, Metric	4	6	1
56–6360	Filter – Fuel	3	8	1
57–3110	Decal – Recoil	3	2	1
60–9010	Strap – Ground	4	7	1
62–3980	Sleeve	3	16	2
62–4200	Decal – Danger	1	4	1
62–4210	Decal – Danger	1	1	1
63–5270	Cover – Wheel	5	25	2
63–8590	Screw – Button Hd	5	27	2
63–9330	Air Cleaner	3	12	1
63–9340	Cover – Air Cleaner	3	19	1
63–9380	Foam Element – Air Cleaner	3	18	1
66–0675	Decal – Power Rating	2	36	1
66–0680	Decal – French Regulation	1	8	1
66–1770	Decal – Toro	7	8	1
66–1790	Decal – Danger	7	4	1
66–1840	Decal – Instructions	7	3	1
66–2000	Decal – Noise Rating	1	13	1
66–5350	Lever – Control	8	10	1
66–5370	Spring – Compression	4	9	1
66–5380	Brake Plate Assembly	4	5	1
66–5990	Shield – Rear	1	9	1
66–6001	Arm – Pivot	5	15	2
66–6020	Shaft – Drive	5	31	1
66–7460	Bulb – Primer	3	10	1
66–9250	Spring Arm Assembly R.H.	1	*	1
66–9260	Spring Arm Assembly L.H.	1	16	1
66–9302	Capscrew – Hex Hd.	3	20	3
67–9370	Arm – Spring	5	14	2
67–9880	Shield – Front	1	29	1
68–9000	Cap – End	5	32	2
70–1590	Decal – 53	2	33	1
70–8080	Clamp – Cable	3	21	1
70–9760	Bushing	5	28	2
77–5260	Strap – Insulation	4	4	1
81–0090	Gasket	13	2	2
81–0090	Gasket – Air Cleaner	3	5	1
81–0162	Fuel Tank Assembly	3	3	1
81–0181	Spark Plug	10	7	1
81–0200	Spark Arrester	14	*2	1
81–0220	Bushing – Choke Valve	13	5	1
81–0230	Spring – Choke	13	4	1
81–0240	Valve – Choke	13	3	1
81–0250	Shaft – Throttle	13	8	1
81–0260	Valve – Throttle	13	9	1
81–0270	Screw – Throttle Valve	13	10	1
81–0520	Pin – Crankcase	9	20	2
81–0540	Bolt (30mm Lg.)	9	10	6
81–0560	Plate – Mounting	9	19	1
81–0570	Bolt (20mm Lg.)	9	18	4
81–0580	Piston (58mm)	9	5	1
81–0590	Ring Set	9	2	1
81–0600	Pin – Wrist	9	4	1

*Not Illustrated

TORO PART NUMBER INDEX (Cont.)

Part No.	Description	Pg. No.	Ref. No.	Qty.
81–0610	Bearing – Wrist Pin	9	17	1
81–0620	Circlip	9	3	2
81–0690	Bearing – Upper (20mm)	9	8	1
81–0700	Bearing – Lower (25mm)	9	13	1
81–0710	Thrust Washer – Upper	9	7	1
81–0720	Oil Seal – Upper	9	6	1
81–0730	Thrust Washer – Lower	9	14	1
81–0740	Oil Seal – Lower	9	15	1
81–0750	Bracket – Governor Arm	9	12	1
81–0760	Pin – Crankshaft	9	16	1
81–0770	Spacer – Governor	9	11	1
81–0780	Gasket	13	15	3
81–0850	Oil Seal – Governor Shaft	12	21	1
81–0860	Washer	12	22	1
81–0870	E–Ring	12	23	1
81–0900	Nut	12	10	2
81–0910	Rod – Carburetor	12	25	1
81–0920	Spring – Carburetor Rod	12	1	1
81–0970	Float	13	19	1
81–1010	Gasket – Float Bowl	13	20	1
81–1020	Gasket – Bowl Screw	13	22	1
81–1030	Jet – Pilot (#40)	13	11	1
81–1060	Jet – Main (#75)	13	18	1
81–1080	Gasket – Muffler	14	1	1
81–1100	Bolt	14	6	2
81–1110	Nut	14	8	2
81–1120	Washer – Lock	14	7	2
81–1140	Screw – Phillips Hd.	14	10	2
81–1150	Bolt – Self Tapping	14	9	1
81–1170	Bolt – Self Tapping	12	12	1
81–1170	Bolt – Self Tapping	11	17	1
81–1210	Reel – Rope Pulley	11	6	1
81–1220	Spring – Dog	11	14	1
81–1230	Dog	11	15	1
81–1240	Spring – Compression	11	5	1
81–1250	Retainer – Dog	11	4	1
81–1260	Bolt – Shoulder	11	16	1
81–1270	Rope	11	11	1
81–1280	Bolt	11	9	4
81–1290	Pulley – Starter Cup	11	2	1
81–1300	Bolt (16mm Lg.)	11	3	3
81–1330	Nut	10	2	1
81–1450	Washer – Lock	12	9	1
81–1480	Clamp	10	6	1
81–1500	Cover – Spark Plug	10	8	1
81–1630	Handle – Recoil	11	13	1
81–1710	Lever – Choke Control	12	19	1
81–1730	Bolt – Throttle Control Brkt.	12	20	1
81–1750	Washer – Choke Control	12	8	2
81–1770	Spacer – Governor Spring	12	6	1
81–1830	Insulator – Kill Switch	12	13	1
81–1840	Terminal – Kill Switch	12	11	1
81–1950	Shaft – Choke	13	7	1
81–2040	Starter Assembly	11	*	1
81–2070	Cover – Cooling Fan	11	1	1
81–2090	Case – Recoil	11	8	1
81–2160	Screw	13	6	2
81–2300	Spring & Retainer	11	*	1
81–2340	Jet – Main (#72.5) High Alt.,	13	*	1
81–2370	Key – Flywheel	10	4	1
81–2420	Bracket – Throttle Control	12	14	1
81–2430	Clamp – Cable	12	17	1
81–2450	Cover – Muffler	14	5	1
81–2460	Spring – Choke Control	12	5	1
81–2470	Spacer – Choke Control	12	16	1
81–2800	Crankcase/Cylinder Ass'y	9	1	1
81–2810	Flywheel – Magneto	10	3	1
81–2820	Coil/Ignition Assembly	10	5	1
81–2830	Spring – Governor	12	24	1
81–2850	Lever – Governor Spring	12	7	1
81–2880	Shaft – Governor	12	4	1
81–4530	Rivet – Kill Switch	12	15	2
81–4600	Crankshaft/Connecting Rod	9	9	1
81–4910	Needle Valve/Spring Wire	13	17	1
81–5410	Rod – Choke	12	3	1
81–5420	Governor Arm/Bolt Ass'y	12	2	1
81–5430	Carburetor Assembly	13	*	1
81–5440	Insulator – Carburetor	13	14	1
81–5450	Stud Bolt – Carburetor	13	1	2
81–5460	Clamp – Vent Tube	13	24	1
81–5470	Tube – Vent	13	25	1
81–5490	Shield – Carburetor	13	13	1
81–5600	Pin	13	16	1
81–5660	Bowl – Float	13	21	1
81–5670	Screw – Bowl	13	23	1
81–5680	Capscrew – Hex Hd.	10	1	2
81–5690	Muffler	14	4	1
81–5810	Needle & Seat Kit	13	*	1
82–7620	Latch – Handle	1	11	2
84–8332	Handle – Upper	7	2	1
85–6902	Cable – Brake	4	8	1
237–137	O–Ring	6	51	1
2412–50	Clip – Convoluted Tubing	8	7	4
2412–95	Clamp – Fuel Line	3	6	4
256–276	Spacer – Nylon	8	9	1
302–56	Fitting – Grease	5	16	2
321–3	Screw – Cap, Hex Hd.	8	4	1
322–7	Screw – Cap, Hex Hd.	1	25	2
3253–4	Washer – Lock	2	35	2
3253–22	Washer – Lock	2	30	1
3256–16	Washer – Flat	3	14	1
3256–22	Washer – Flat	8	16	1
3290–255	Hairpin Cotter	1	14	2
3290–346	Retainer – Push On	5	11	1
3290–378	Cable Tie	8	6	2
3290–459	Rivet	4	3	2
3296–6	Locknut	1	17	2
3296–6	Nut	5	26	2
3296–42	Locknut	8	11	3
3296–47	Locknut	7	12	2
3296–58	Locknut	8	12	2
32104 –76	Screw – Self Tapping	7	7	5
32121–1	Pin – Roll	5	41	2
32121–88	Pin – Coil	5	42	1
32121–98	Pin – Coil	5	20	2
32121–114	Pin – Roll	5	1	1
32140–64	Screw – Self Tapping	5	3	1
32144–70	Screw	2	32	4
32144–70	Screw – Thread Forming	3	22	1
32144–70	Screw – Thread Forming	5	30	4
32144–112	Screw – Self Tapping	4	12	1
32144–112	Screw – Thread Forming	3	24	2

OPTIONAL EQUIPMENT

Grass Bagging Kit ..... Part No. 47–6510
Grass Bagging Kit ..... Part No. 29–9750

*Not Illustrated

Litho in U.S.A.