FORM NO. 3316–162

TORO®

MODEL NO. 16411–3900001 & UP

PARTS CATALOG

21" SIDE DISCHARGE MOWER

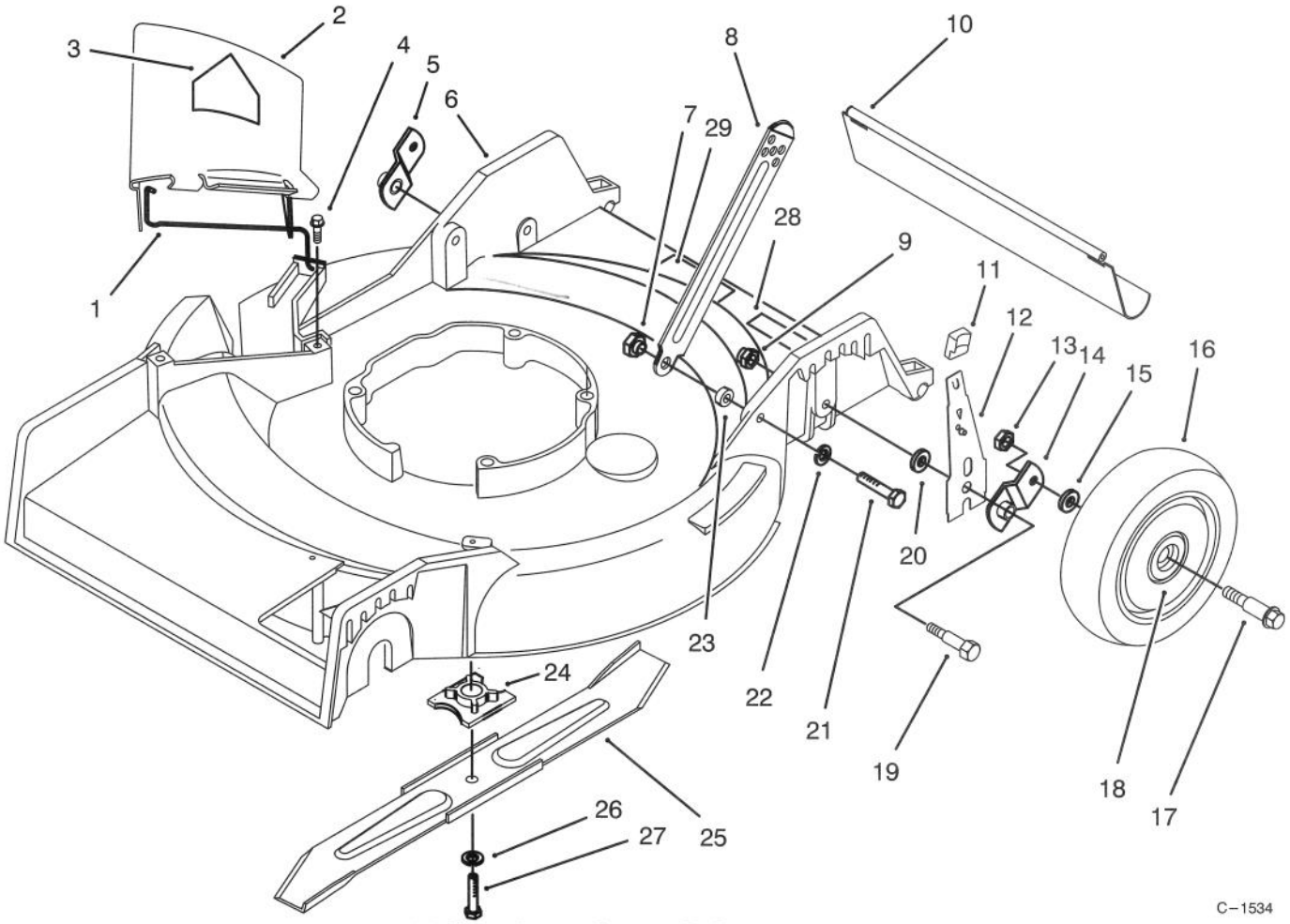

C–1534

HOUSING ASSEMBLY

Ref. No.	Part No.	Description	No. Used
1	20–2640	Spring – Hinge	1
2	13–4049	Deflector Assembly (Incl. Ref. #1 & 3)	1
3	39–5770	Decal – Danger	1
4	46–6811	Screw w/Washer	2
5	20–2130	Pivot Arm Assembly "B"	1
6	13–3489	Housing Assembly (Incl. Ref. #28 & 29)	1
7	27–6520	Nut – Shoulder	2
8	82–7620	Latch – Handle	2
9	12–2080	Nut – Shoulder	2
10	66–5990	Shield – Rear	1
11	25–7740	Knob – Spring Arm	2
12	66–6030	Spring Arm Assembly	2
13	3296–6	Locknut	2
14	20–2140	Pivot Arm Assembly "A"	1

Ref. No.	Part No.	Description	No. Used
15	40–1940	Washer – Wheel Bolt	2
16	27–6201	Wheel & Tire Assembly (Incl. Ref. #18)	2
17	27–6231	Bolt – Wheel	2
18	27–6250	Bushing	4
19	3–0655	Screw – Pivot	2
20	33–0390	Washer – Pivot	2
21	322–7	Hex Hd. Capscrew	2
22	3253–4	Washer – Lock	2
23	3–3287	Spacer – Handle Latch	2
24	49–7890	Retainer – Blade	1
25	20–2720	Blade – 21"	1
26	3253–22	Lockwasher	1
27	26–0671	Blade – Screw	1
28	92–1779	Decal – Warning	1
29	71–1280	Decal –Danger	1

© The TORO Company –1993
All Rights Reserved

TPS

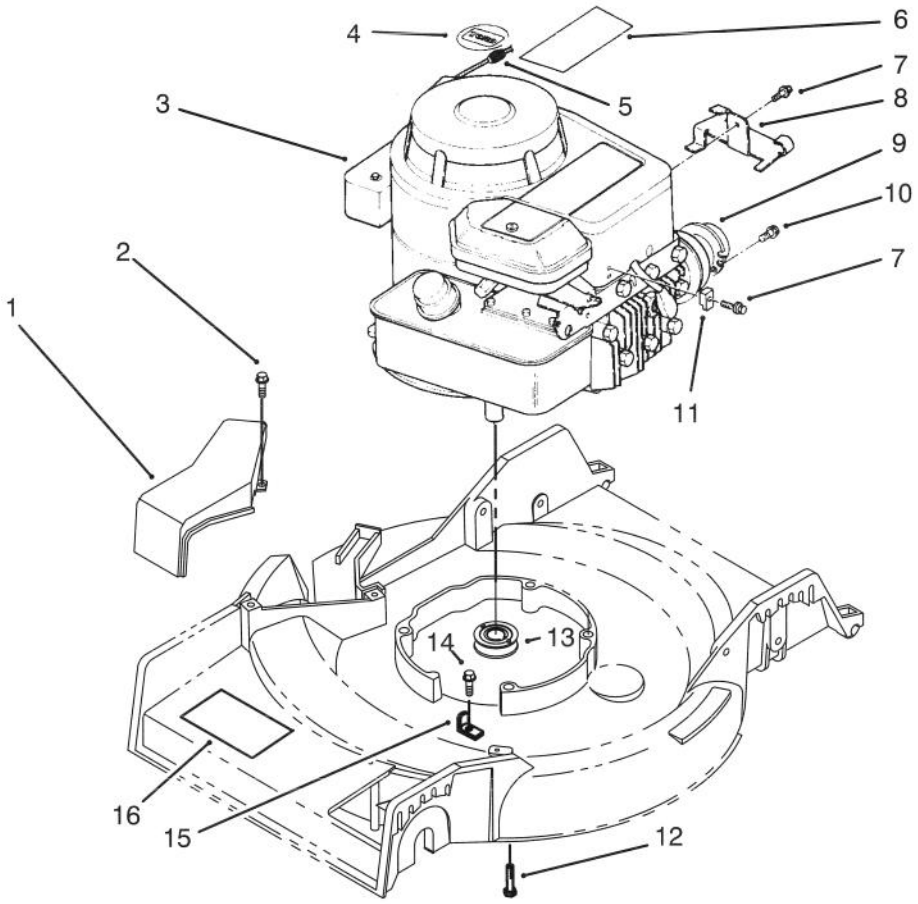

C–1535

ENGINE ASSEMBLY

Ref. No.	Part No.	Description	No. Used
1	46–4780	Cover – Belt	1
2	32144–112	Screw – Thread Forming	2
3		Engine	1
4	92–2296	Decal – Engine	1
5	2210–316	Stop – Rope	1
6	92–3145	Decal – Engine	1
7	86–7990	Screw – Clamp	2
8	80–0460	Bracket – Cable	1

Ref. No.	Part No.	Description	No. Used
9	2210–174	Deflector – Muffler	1
10	2210–173	Screw – Deflector	2
11	86–7980	Clamp – Casing	1
12	32144–105	Screw – Thread Forming	3
13	23–0130	Pulley – Driver	1
14	32144–70	Screw – Hex Hd. Flange	1
15	70–8080	Guide – Belt	1
16	71–0600	Decal – Toro	1

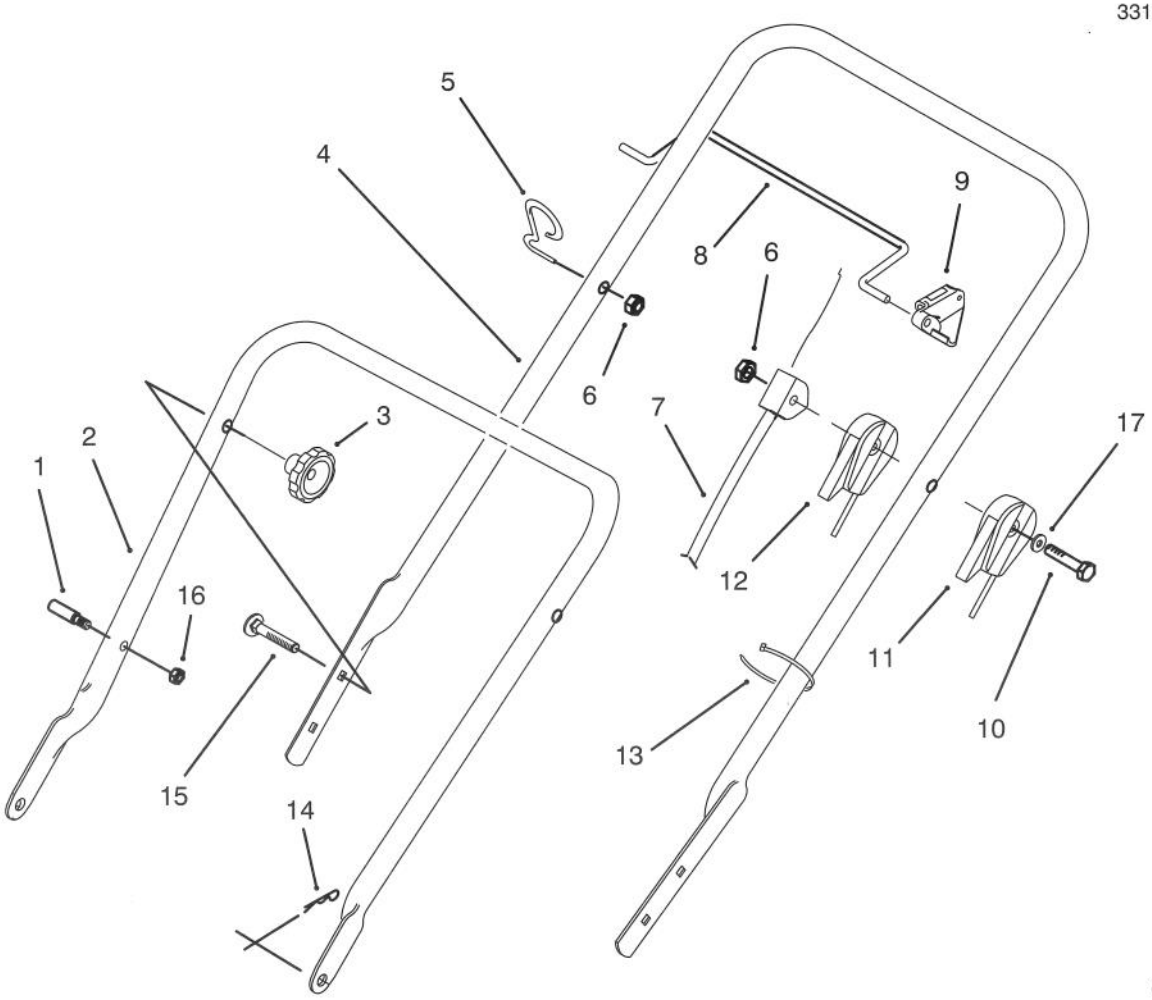

C–1536

HANDLE ASSEMBLY

Ref. No.	Part No.	Description	No. Used
†1	49–2750	Pin – Handle	2
2	49–1690	Lower Handle Assembly	1
3	19–4050	Knob – Handle	2
4	92–6513	Handle – Upper	1
5	86–9671	Guide – Rope	1
6	3296–73	Nut – Lock	2
7	92–4064	Cable – Brake	1
8	92–3134	Bar – Control	1
9	92–5412	Stop – Pivot	1
10	321–23	Capscrew	1

Ref. No.	Part No.	Description	No. Used
11	92–5728	Control – Traction	1
12	92–5729	Control – Throttle	1
13	3290–378	Cable – Tie	2
14	3290–255	Cotter – Hairpin	2
15	614697	Screw – Handle	2
†16	3296–47	Nut – Lock	2
17	3256–22	Washer – Flat	1
*	16–3489	Loose Parts Assembly (Incl. Ref. #3, & 13–15)	1

* Not Illustrated

† Service Replacement Part

3316–162

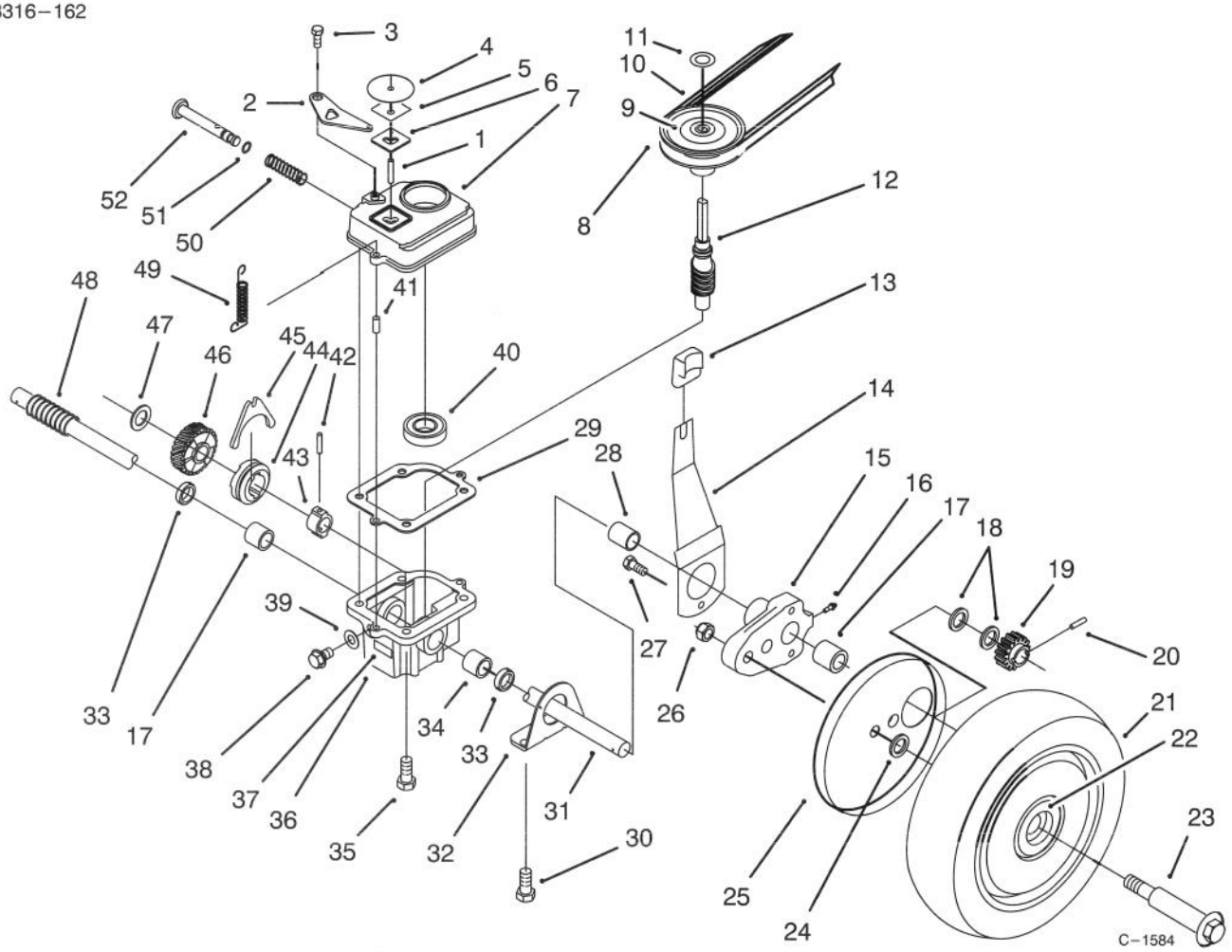

GEAR CASE ASSEMBLY

Ref. No.	Part No.	Description	No. Used
1	32121–114	Pin – Roll	1
2	5–3252	Arm – Shifter	1
3	32140–64	Screw – Self Tapping	1
4	52–7380	Cover – Dust, Transmission	1
5	52–7370	Filter – Dust	1
6	3–0681	Plate – Latch	1
7	39–1101	Cover – Gear Case	1
8	18–9760	Pulley	1
9	33–2450	Decal – Caution	1
10	5–4505	V–Belt	1
11	3290–346	Retainer – Push On	1
12	8–5679	Worm Shaft & Gear (Incl. Ref. #46)	1
13	25–7740	Knob – Arm	2
14	67–9370	Arm – Spring	2
15	66–6001	Arm – Pivot (Incl. Ref. #16, 17 & 28)	2
16	302–56	Fitting – Grease	2
17	47–2900	Bushing	3
18	46–6510	Washer – Thrust	4
19	46–6520	Gear – Pinion	2
20	32121–98	Pin – Coil	2
21	11–1419	Wheel, Tire & Gear Assy (Incl. Ref. #22)	2
22	27–6250	Bushing – Wheel	4
23	27–6231	Bolt – Wheel	2

Ref. No.	Part No.	Description	No. Used
24	40–1940	Washer – Wheel Bolt	2
25	36–5630	Cover – Wheel	2
26	3296–6	Nut	2
27	63–8590	Screw – Button Hd	2
28	70–9760	Bushing	2
29	36–1000	Gasket – Gear Case	1
30	32144–70	Screw – Thread Forming	4
31	66–6020	Shaft – Drive	1
32	68–9000	Cap – End	2
33	47–6730	Seal – Oil	2
34	47–2890	Bushing	1
35	11–9760	Screw	4
36	8–0479	Gear Case (Incl. Ref. #17, 23 & 34)	1
37	40–4755	Decal – Gear Box	1
38	28–1550	Screw – Nylon	1
39	46–9640	Gasket	1
40	47–7250	Bearing – Ball	1
41	32121–1	Pin – Roll	2
42	32121–88	Pin – Coil	1
43	3–0721	Sleeve	1
44	19–5660	Jaw – Clutch	1
45	5–3247	Fork – Shifter	1
46		Gear – Helical	1
47	3–0724	Washer – Thrust	1
48	24–7920	Cover – Drive Shaft	1

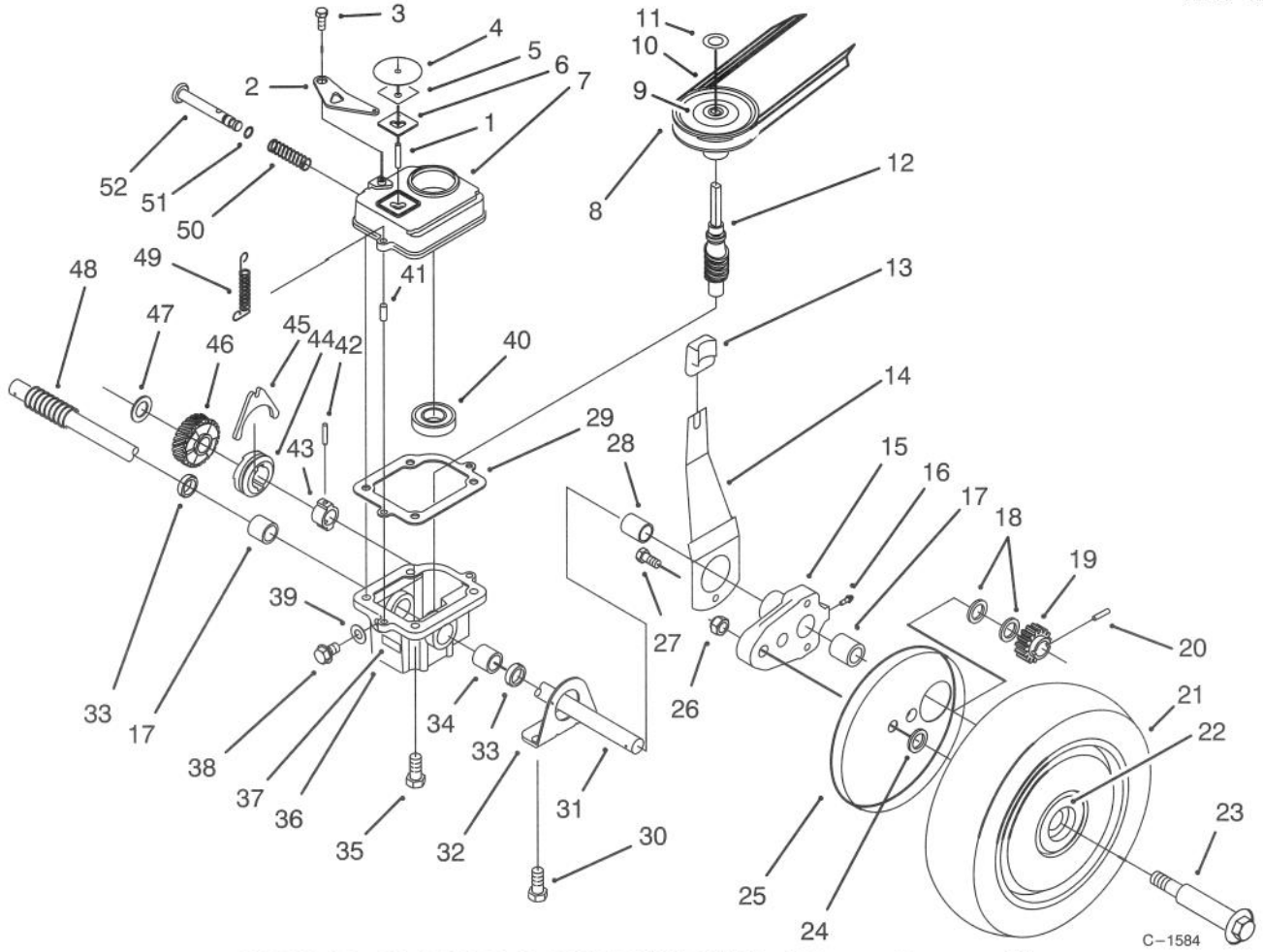

GEAR CASE ASSEMBLY (Continued)

Ref. No.	Part No.	Description	No. Used
49	17–4490	Spring – Tension, Belt	1
50	3–0731	Spring	1
51	237–137	O–Ring	1
52	46–8240	Rod – Shifter	1
*	13–3479	Gear Case Assembly (Complete)	1

Ref. No.	Part No.	Description	No. Used
*	27–0490	Bearing & Shaft Tool	1
*†	39–9640	Metric Bearing Tool	1
*	27–0460	Tool – Bushing	1

*Not Illustrated
†Use with 27–0490 Bearing & Shaft Tool

3316–162

★ REQUIRES SPECIAL TOOLS TO INSTALL. SEE REPAIR INSTRUCTION MANUAL.

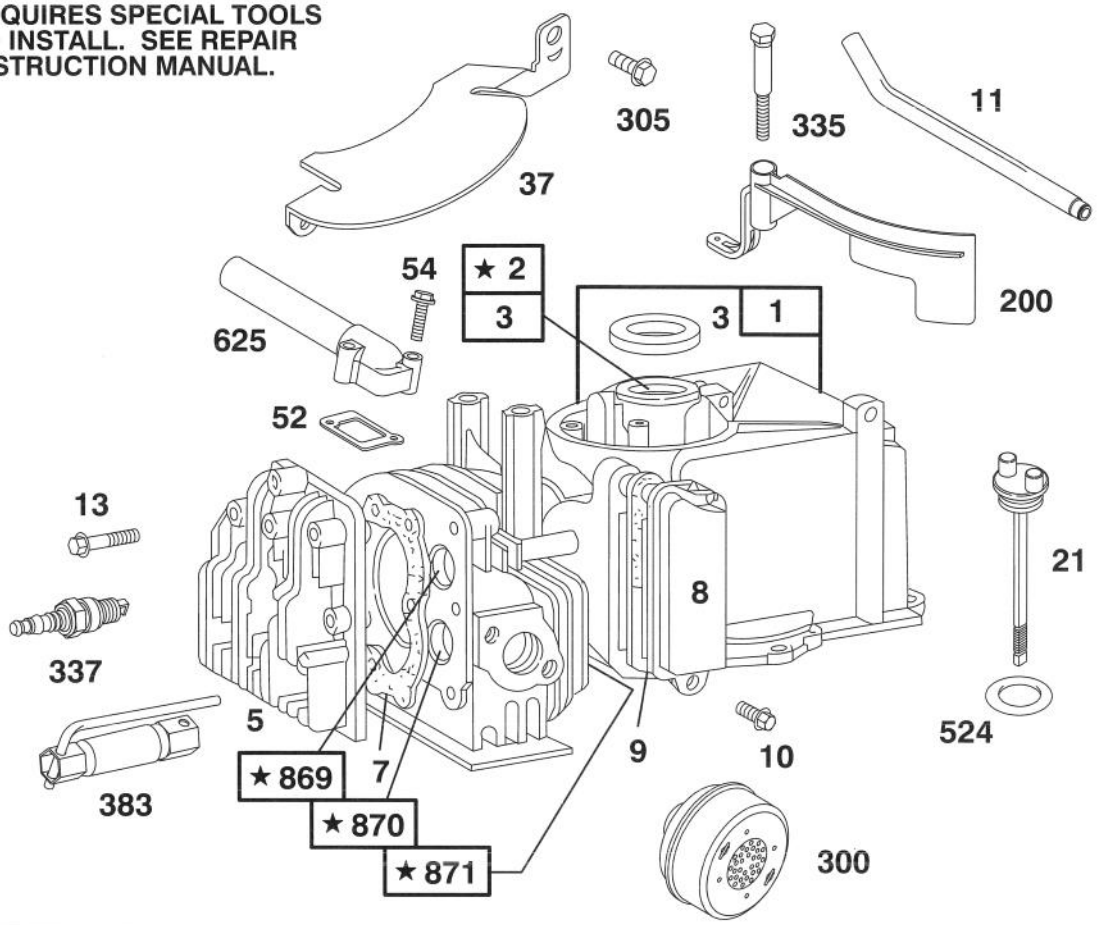

1019 LABEL KIT

Assemblies include all parts shown in frames.

358 GASKET SET

ENGINE BRIGGS & STRATTON MODEL 95902–3153–01

Ref. No.	Part No.	Description	No. Used
1	399164	Cylinder Assembly	
2	293708	Bushing–Cylinder (Plain)	
★3	299819	Seal–Oil	
5	213942	Head–Cylinder	
★7	272536	Gasket–Cylinder Head	
8	495785	Breather–Valve Chamber	
★9	272602	Gasket–Valve Cover	
10	94621	Screw–Breather	
11	231774	Tube–Breather	
13	93111	Screw–Hex. Washer Head	
21	281081	Plug–Oil Filler	
37	223150	Guard–Flywheel	
★52	270345	Gasket–Intake Elbow	
54	93485	Screw–Intake Elbow Mtg.	
200	281024	Blade–Governor	
300	394569	Muffler–Exhaust (Lo-Tone)	

Ref. No.	Part No.	Description	No. Used
305	94153	Screw–Blower Housing Mtg.	
335	94732	Screw–Armature and Gov. Blade Mounting Sem	
337	802592	Plug–Spark	
358	298989	Gasket Set	
383	89838	Wrench–Spark Plug	
★524	271485	Seal–Filler Tube	
625	298775	Tube–Fuel Intake	
869	211172	Seat–Intake Valve (Std.)	
870	211291	Seat–Exhaust Valve (Std.) **Note:** For Installation and Options See Repair Manual.	
871	231348	Guide–Exhaust Valve **Note:** 63709 Guide–Intake Valve	
1019	491082	Label Kit	

★ Included in Gasket Set–Part No. 298989.

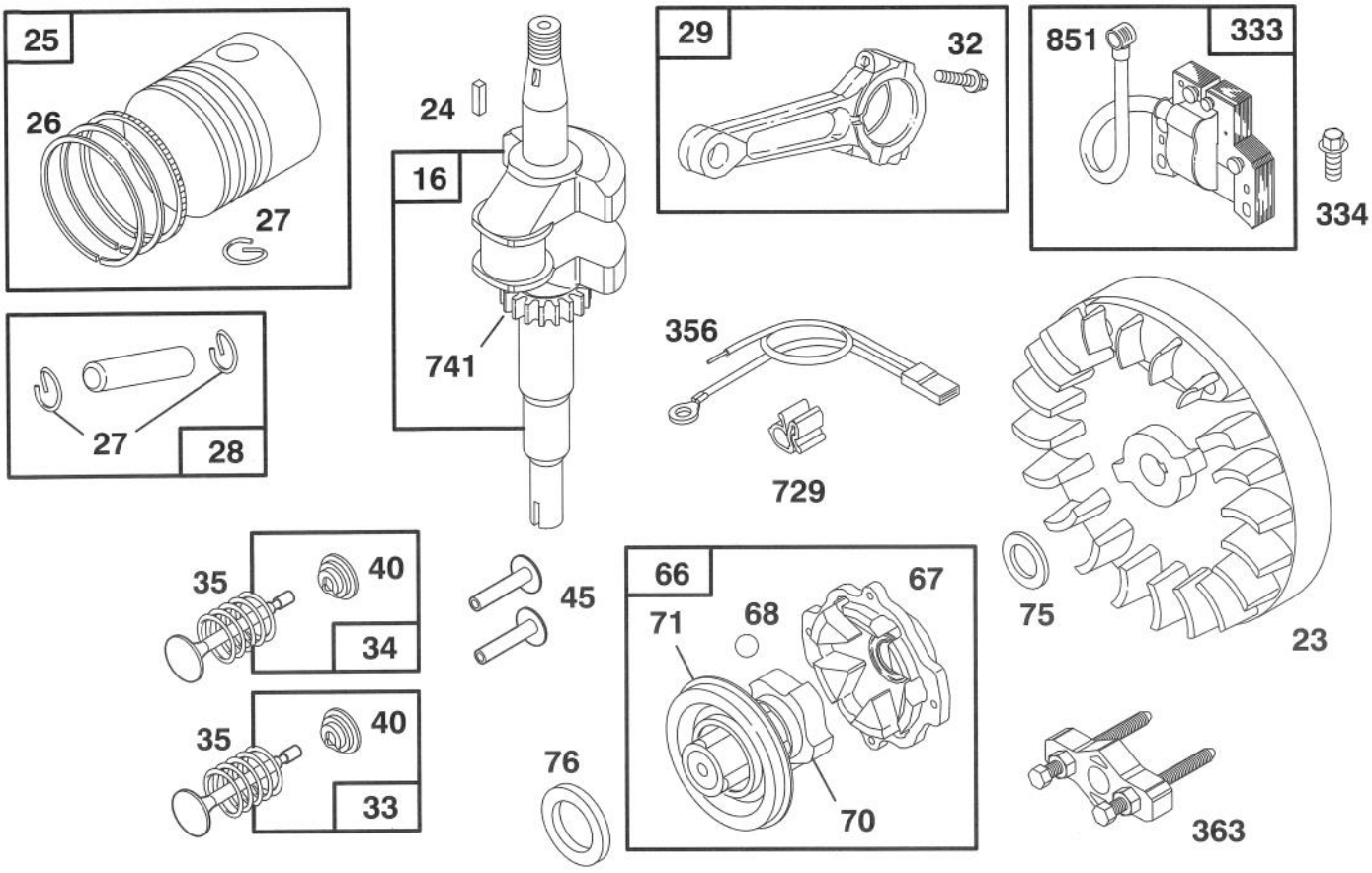

Assemblies include all parts shown in frames.

ENGINE BRIGGS & STRATTON MODEL 95902–3153–01

Ref. No.	Part No.	Description	No. Used
16	496069	Crankshaft **Note:** To Replace Crankshaft Gear Pin Order Part No. 230978.	
23	495046	Flywheel–Magneto	
24	222698	Key–Flywheel	
25	298904	Piston Assy. (Std.)	
	298905	Piston Assy. (.010" O.S.)	
	298906	Piston Assy. (.020" O.S.)	
	298907	Piston Assy. (.030" O.S.)	
		PISTON RING SETS:	
26	298982	Ring Set–Piston (Std.)	
	298983	Ring Set–Piston (.010" O.S.)	
	298984	Ring Set–Piston (.020" O.S.)	
	298985	Ring Set–Piston (.030" O.S.)	
27	26026	Lock–Piston Pin	
28	298909	Pin Assy.–Piston (Std.)	
	298908	Pin Assy.–Piston (.005" O.S.)	
29	294201	Rod Assy.–Connecting **Note:** For Conn. Rod With 020" Undersize Crankpin Bore–Order No. 296079.	

Ref. No.	Part No.	Description	No. Used
32	94699	Screw–Connecting Rod	
33	296676	Valve–Exhaust	
34	296677	Valve–Intake	
35	260552	Spring–Intake Valve	
40	93312	Retainer–Valve Spring	
45	230173	Tappet–Valve	
66	399671	Clutch Assembly–Rewind Starter	
67	394897	Housing–Starter Clutch	
68	63770	Ball–Clutch	
70	298799	Ratchet–Rewind Starter	
71	394506	Washer–Clutch Retainer	
75	223047	Washer–Spring	
76	68238	Washer–Ratchet Sealing	
333	398593	Armature–Magneto	
334	94731	Screw–Armature Mounting	
356	398808	Wire–Ground	
363	19069	Puller–Flywheel	
729	280470	Clip–Wire	
741	261533	Gear–Timing	
851	221798	Terminal–Ignition Cable	

★ **REQUIRES SPECIAL TOOLS TO INSTALL. SEE REPAIR INSTRUCTION MANUAL.**

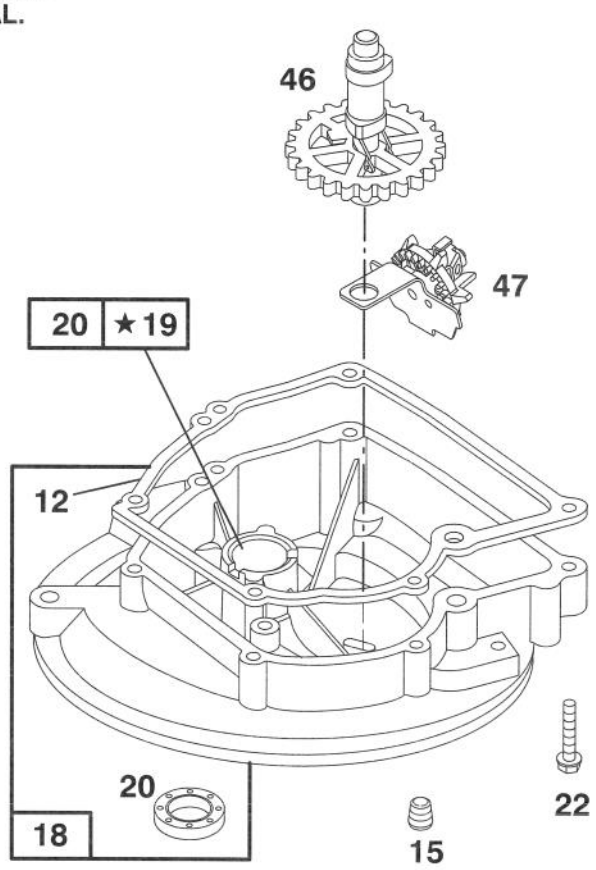

Assemblies include all parts shown in frames.

ENGINE BRIGGS & STRATTON MODEL 95902–3153–01

Ref. No.	Part No.	Description	No. Used
★12	270833	Gasket–Crankcase (.015" Thick, Standard)	
★	270895	Gasket–Crankcase (.005" Thick)	
★	270896	Gasket–Crankcase (.009" Thick)	
15	94720	Plug–Oil Drain	

Ref. No.	Part No.	Description	No. Used
18	395384	Sump–Engine	
19	293709	Bushing–Engine Sump (Plain)	
20	391483	Seal–Oil	
22	94607	Screw–Mtg. Sem	
46	493747	Gear–Cam	
47	491688	Oil Slinger Gear and Bracket	

★ Included in Gasket Set–Part No. 298989.

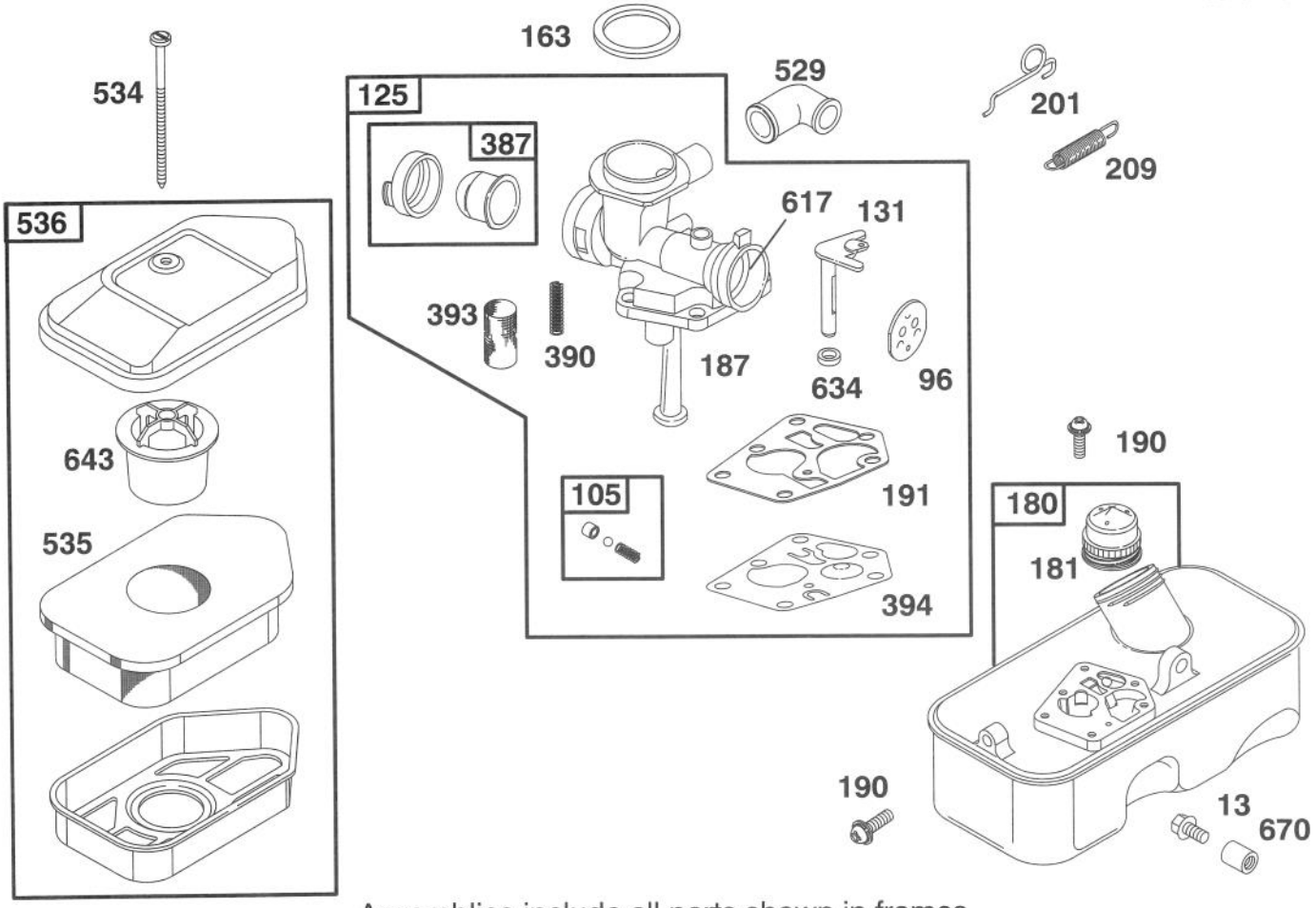

Assemblies include all parts shown in frames.

ENGINE BRIGGS & STRATTON MODEL 95902–3153–01

Ref. No.	Part No.	Description	No. Used
13	93111	Screw–Hex. Washer Hd.	
96	224412	Valve–Throttle	
105	494409	Needle Valve Seat Assy.	
125	494775	Carburetor Assembly	
131	281047	Shaft and Lever–Throttle	
★163	271139	Gasket–Air Cleaner Mtg.	
180	494406	Tank Assembly–Fuel	
181	493982	Cap–Fuel Tank	
187	493981	Pipe–Fuel Pick-Up	
190	93440	Screw–Fuel Tank Mtg.	
191	272372	Gasket–Pump	
201	262753	Link–Governor	
209	262759	Spring–Governor	

Ref. No.	Part No.	Description	No. Used
387	494408	Primer Bulb Assy.	
390	262764	Spring–Diaphragm	
393	262734	Screen–Jet	
394	281028	Diaphragm–Carburetor	
529	67838	Grommet–Breather	
534	93865	Screw–Air Cleaner	
535	272235	Element–Air Cleaner	
536	493492	Cleaner Assembly–Air	
617	270344	Seal–Fuel Intake Tube	
634	280566	Seal–Throttle Shaft	
643	280972	Cup–Air Cleaner	
670	94038	Spacer–Fuel Tank	

★ Included in Gasket Set–Part No. 298989.

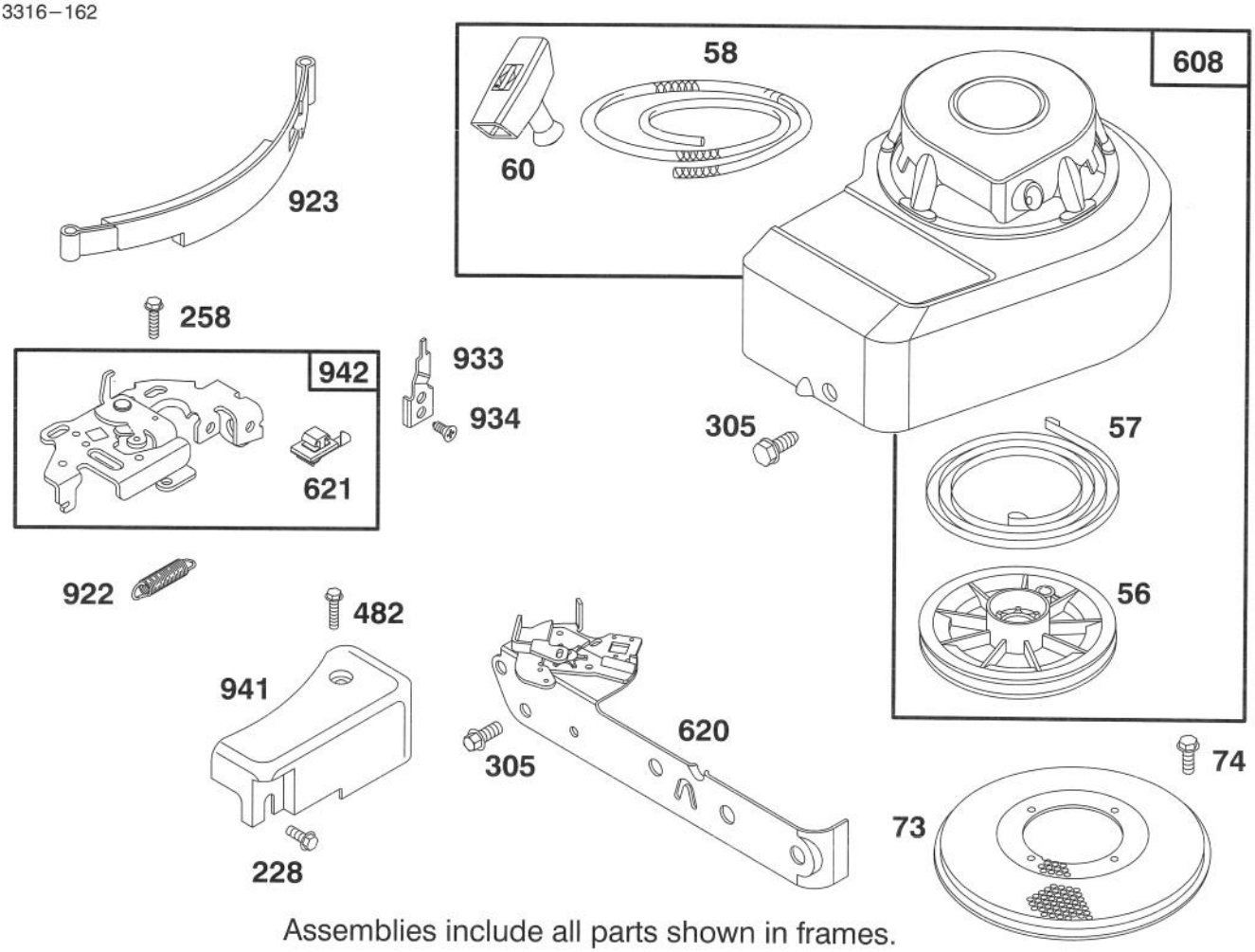

Assemblies include all parts shown in frames.

ENGINE BRIGGS & STRATTON MODEL 95902–3153–01

Ref. No.	Part No.	Description	No. Used
56	280439	Pulley–Rewind Starter	
57	490179	Spring–Rewind Starter	
58	280406	Rope–Rewind Starter	
60	393152	Grip–Starter Rope	
73	221661	Screen–Rewind Starter	
74	93758	Screw–Sem	
228	93758	Screw–Hex. Head	
258	94018	Screw–Sem (Bracket to Cylinder)	
305	94153	Screw–Blower Housing Mtg.	

Ref. No.	Part No.	Description	No. Used
482	93621	Screw–Sem	
608	494456	Starter Assy.–Rewind	
620	495486	Plate–Carburetor Control	
621	396847	Switch–Stop	
922	261647	Spring–Band Brake	
923	394867	Brake Assembly–Band	
933	223448	Pivot–Band Brake	
934	94037	Screw–Band Brake Pivot	
941	281285	Cover–Linkage	
942	493248	Bracket Assembly–Lever	

TORO PART NUMBER INDEX

Part No.	Description	Pg. No.	Ref. No.	Qty.
614697	Screw – Handle	3	15	2
3–0655	Screw – Pivot	1	19	2
3–0681	Plate – Latch	4	6	1
3–0721	Sleeve	4	43	1
3–0724	Washer – Thrust	4	47	1
3–0731	Spring	5	50	1
3–3287	Spacer – Handle Latch	1	23	2
5–3247	Fork – Shifter	4	45	1
5–3252	Arm – Shifter	4	2	1
5–4505	V–Belt	4	10	1
8–0479	Gear Case	4	36	1
8–5679	Worm Shaft & Gear	4	12	1
11–1419	Wheel, Tire & Gear Assy	4	21	2
11–9760	Screw	4	35	4
12–2080	Nut – Shoulder	1	9	2
13–3479	Gear Case Assembly	5	*	1
13–3489	Housing Assembly	1	6	1
13–4049	Deflector Assembly	1	2	1
16–3489	Loose Parts Assembly	3	*	1
17–4490	Spring – Tension, Belt	5	49	1
18–9760	Pulley	4	8	1
19–4050	Knob – Handle	3	3	2
19–5660	Jaw – Clutch	4	44	1
20–2130	Pivot Arm Assembly B	1	5	1
20–2140	Pivot Arm Assembly A	1	14	1
20–2640	Spring – Hinge	1	1	1
20–2720	Blade – 21	1	25	1
23–0130	Pulley – Driver	2	13	1
24–7920	Cover – Drive Shaft	4	48	1
25–7740	Knob – Arm	4	13	2
25–7740	Knob – Spring Arm	1	11	2
26–0671	Blade – Screw	1	27	1
27–0460	Tool – Bushing	5	*	1
27–0490	Bearing & Shaft Tool	5	*	1
27–6201	Wheel & Tire Assembly	1	16	2
27–6231	Bolt – Wheel	1	17	2
27–6231	Bolt – Wheel	4	23	2
27–6250	Bushing	1	18	4
27–6250	Bushing – Wheel	4	22	4
27–6520	Nut – Shoulder	1	7	2
28–1550	Screw – Nylon	4	38	1
33–0390	Washer – Pivot	1	20	2
33–2450	Decal – Caution	4	9	1
36–1000	Gasket – Gear Case	4	29	1
36–5630	Cover – Wheel	4	25	2
39–1101	Cover – Gear Case	4	7	1
39–5770	Decal – Danger	1	3	1
39–9640	Metric Bearing Tool	5	*	1
40–1940	Washer – Wheel Bolt	1	15	2
40–1940	Washer – Wheel Bolt	4	24	2
40–4755	Decal – Gear Box	4	37	1
46–4780	Cover – Belt	2	1	1
46–6510	Washer – Thrust	4	18	4
46–6520	Gear – Pinion	4	19	2
46–6811	Screw w/Washer	1	4	2
46–8240	Rod – Shifter	5	52	1
46–9640	Gasket	4	39	1
47–2890	Bushing	4	34	1
47–2900	Bushing	4	17	3
47–6730	Seal – Oil	4	33	2
47–7250	Bearing – Ball	4	40	1
49–1690	Lower Handle Assembly	3	2	1
49–2750	Pin – Handle	3	1	2
49–7890	Retainer – Blade	1	24	1
52–7370	Filter – Dust	4	5	1
52–7380	Cover – Dust, Transmission	4	4	1
63–8590	Screw – Button Hd	4	27	2
66–5990	Shield – Rear	1	10	1
66–6001	Arm – Pivot	4	15	2
66–6020	Shaft – Drive	4	31	1
66–6030	Spring Arm Assembly	1	12	2
67–9370	Arm – Spring	4	14	2
68–9000	Cap – End	4	32	2
70–8080	Guide – Belt	2	15	1
70–9760	Bushing	4	28	2
71–0600	Decal – Toro	2	16	1
71–1280	Decal –Danger	1	29	1
80–0460	Bracket – Cable	2	8	1
82–7620	Latch – Handle	1	8	2
86–7980	Clamp – Casing	2	11	1
86–7990	Screw – Clamp	2	7	2
86–9671	Guide – Rope	3	5	1
92–1779	Decal – Warning	1	28	1
92–2296	Decal – Engine	2	4	1
92–3134	Bar – Control	3	8	1
92–3145	Decal – Engine	2	6	1
92–4064	Cable – Brake	3	7	1
92–5412	Stop – Pivot	3	9	1
92–5728	Control – Traction	3	11	1
92–5729	Control – Throttle	3	12	1
92–6513	Handle – Upper	3	4	1
2210–173	Screw – Deflector	2	10	2
2210–174	Deflector – Muffler	2	9	1
2210–316	Stop – Rope	2	5	1
237–137	O–Ring	5	51	1
302–56	Fitting – Grease	4	16	2
321–23	Capscrew	3	10	1
322–7	Hex Hd. Capscrew	1	21	2
3253–4	Washer – Lock	1	22	2
3253–22	Lockwasher	1	26	1
3256–22	Washer – Flat	3	17	1
3290–255	Cotter – Hairpin	3	14	2
3290–346	Retainer – Push On	4	11	1
3290–378	Cable – Tie	3	13	2
3296–6	Locknut	1	13	2
3296–6	Nut	4	26	2
3296–47	Nut – Lock	3	16	2
3296–73	Nut – Lock	3	6	2
32121–1	Pin – Roll	4	41	2
32121–88	Pin – Coil	4	42	1
32121–98	Pin – Coil	4	20	2
32121–114	Pin – Roll	4	1	1
32140–64	Screw – Self Tapping	4	3	1
32144–70	Screw – Hex Hd. Flange	2	14	1
32144–70	Screw – Thread Forming	4	30	4
32144–105	Screw – Thread Forming	2	12	3
32144–112	Screw – Thread Forming	2	2	2

OPTIONAL EQUIPMENT

Grass Bagging Kit ..... Part No. 47–6510
Grass Bagging Klt ..... Part No. 29–9750

*Not Illustrated

PRODUCT CHANGES

In an effort to make improvements available to TORO owners as quickly as possible, minor changes are incorporated into Toro's products from time to time that do not become immediately shown in the Parts Catalog. If such a change has been made in your unit, which is not reflected in your manual, see your TORO Distributor or his Authorized TORO Service Dealer for information and part numbers.

COUNTRIES OTHER THAN THE UNITED STATES OR CANADA

Customers who have purchased TORO products exported from the United States or Canada should contact their Toro Distributor (Dealer) to obtain guarantee policies for your country, province or state. If for any reason you are dissatisfied with your Distributor's service or have difficulty obtaining guarantee information, contact the TORO importer. If all other remedies fail, you may contact us at The Toro Company.

MAINTENANCE RECORD

Date								

Compliance with Radio Interference Regulations Certified.
Certifie Conforme au Reglement sur le Brouillage Radioelectrique.

Litho in U.S.A.

LTS 304006