Form No. 3356-978 Rev B

TORO®

Count on it.

Operator's Manual

Spring Rake

for Sand Pro®/Infield Pro® 3040 and 5040 Traction Units

Model No. 08752—Serial No. 270000001 and Up

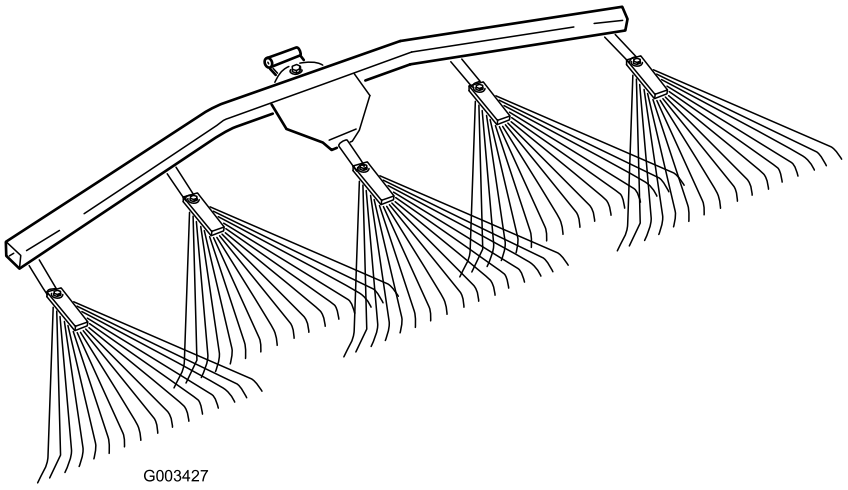

G003427

CE

Register at www.Toro.com.

Original Instructions (EN)

Introduction

Read this information carefully to learn how to operate and maintain your product properly and to avoid injury and product damage. You are responsible for operating the product properly and safely.

You may contact Toro directly at www.Toro.com for product and accessory information, help finding a dealer, or to register your product.

Whenever you need service, genuine Toro parts, or additional information, contact an Authorized Service Dealer or Toro Customer Service and have the model and serial numbers of your product ready. Figure 1 identifies the location of the model and serial numbers on the product. Write the numbers in the space provided.

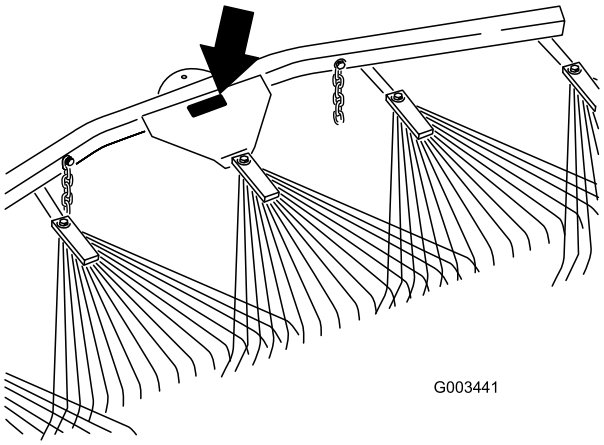

Figure 1

1. Model and serial number location

Model No. _____

Serial No. _____

This manual identifies potential hazards and has safety messages identified by the safety alert symbol (Figure 2), which signals a hazard that may cause serious injury or death if you do not follow the recommended precautions.



Figure 2

1. Safety alert symbol

This manual uses 2 other words to highlight information. **Important** calls attention to special mechanical information and **Note** emphasizes general information worthy of special attention.

Contents

Introduction 2
Safety 3
    Safety and Instructional Decals 3
Setup 4
    1 Installing the Spring Rake on a Tooth Rake 5
    2 Reading the Documentation and Storing the Loose Parts 6
Product Overview 7
Operation 7
    Training Period 7
    General Raking Information 7
    Raking Pattern 7
    Entering and Leaving the Trap 8
    Setting the Transport Position 8
    Installing the Spring Rake on the Traction Unit 8
    Adjusting the Rake Angle 10
Maintenance 11
    Inspecting and Cleaning the Rake and Traction Unit 11
    Greasing the Attachment Adapter 11

© 2006—The Toro® Company
8111 Lyndale Avenue South
Bloomington, MN 55420

Contact us at www.Toro.com.
Printed in the USA.
All Rights Reserved

Safety

Safety and Instructional Decals

Safety decals and instructions are easily visible to the operator and are located near any area of potential danger. Replace any decal that is damaged or lost.



106-5517

With the Lift Arm Assembly Only

1. Warning—do not touch the hot surface.

Setup

Loose Parts

Use the chart below to verify that all parts have been shipped.

Procedure	Description	Qty.	Use
1	Spring rake assembly	1	Install the lift arm adapter assembly.
	Curved pivot bracket	1	
	Straight pivot bracket	1	
	Shoulder bolt	1	
	Washer (0.531 x 1.063)	3	
	Washer (0.469 x 0.922)	1	
	Locknut (7/16 inch)	1	
	Clevis pin (1/2 x 4-1/2 inches)	1	
	Cotter pin	1	
	Hook	2	
	Flange nut (3/8 inch)	2	
2	Operator's Manual	1	Read the documentation and store it and the loose parts in a safe location.
	Parts Catalog	1	
	Bolt (3/8 x 2-1/2 inches)	2	
	Washer (3/8 x 7/8 inch)	4	
	Spacer	2	
	Flange nut (3/8 inch)	2	

Important: **This kit was designed to be installed on the back of the Tooth Rake or the traction unit. To mount it to the traction unit, you must obtain a lift arm/adapter assembly; refer to Installing the Spring Rake on the Traction Unit in Operation , page 7.**

1

Installing the Spring Rake on a Tooth Rake

Parts needed for this procedure:

1	Spring rake assembly
1	Curved pivot bracket
1	Straight pivot bracket
1	Shoulder bolt
3	Washer (0.531 x 1.063)
1	Washer (0.469 x 0.922)
1	Locknut (7/16 inch)
1	Clevis pin (1/2 x 4-1/2 inches)
1	Cotter pin
2	Hook
2	Flange nut (3/8 inch)

Procedure

1. Depending on the application, secure a curved or straight pivot bracket to the spring rake with a shoulder bolt, washer (.531 x 1.063), washer (.469 x .922), and locknut (7/16 inch) as follows:

   - Use the curved pivot bracket, as shown in Figure 3, if the bracket on the end of the tooth rake faces upward.

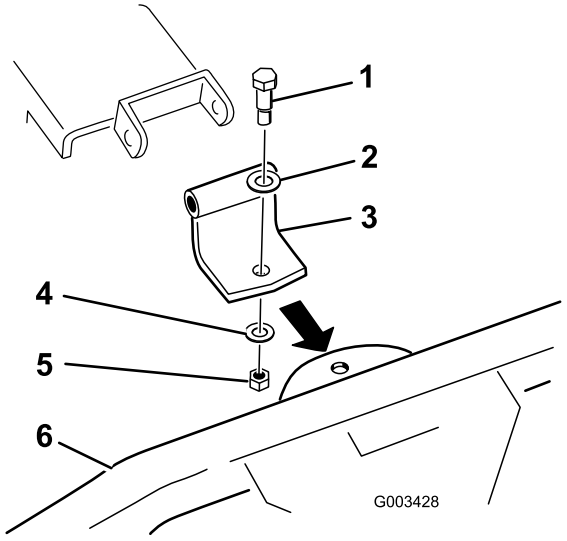

Figure 3

1. Shoulder bolt
2. Washer (0.531 x 1.063)
3. Curved pivot bracket
4. Washer (0.469 x 0.922)
5. Locknut (7/16 inch)
6. Spring rake
7. Tooth rake bracket facing upward

   - Use the straight pivot bracket, as shown in Figure 4, if the bracket on the end of the tooth rake faces downward. Discard the curved pivot bracket.

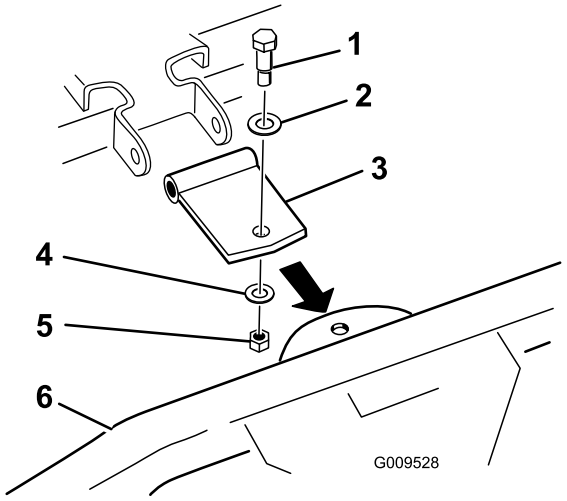

Figure 4

1. Shoulder bolt
2. Washer (0.531 x 1.063)
3. Straight pivot bracket
4. Washer (0.469 x 0.922)
5. Locknut (7/16 inch)
6. Spring rake
7. Tooth rake bracket facing downward

2. Connect the pivot bracket to the tooth rake as illustrated in Figure 5 with a clevis pin (1/2 x 4-1/2 inches), 2 washers (0.531 x 1.063), and a cotter pin.

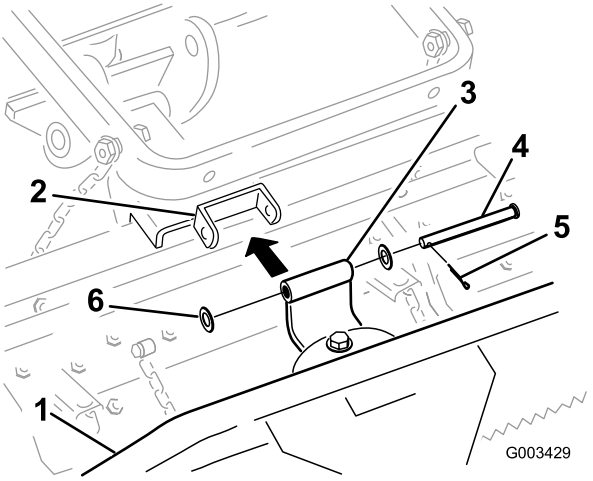

Figure 5

1. Spring rake
2. Tooth rake bracket
3. Straight pivot bracket
4. Clevis pin (1/2 x 4-1/2 inches)
5. Cotter pin
6. Washer (0.531 x 1.063)

3. Secure the transport chains to the lift arm using one of the following procedures:

   A. Mount 2 hooks to the back of the lift arm with 2 flange nuts (3/8 inch) (Figure 6). Secure the chains to the hooks at the desired length.

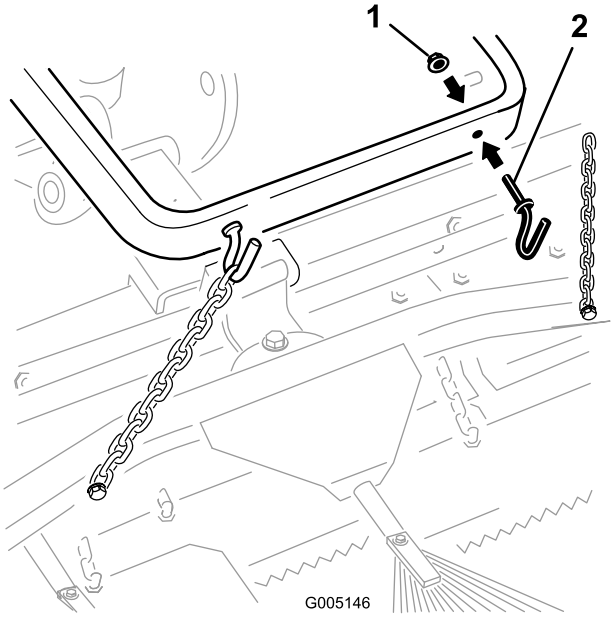

Figure 6

1. Flange nut (3/8 inch)
2. Hook

   B. Secure each chain to the side of the lift arm with a bolt (3/8 x 2-1/2 inch), 2 washers (3/8 x 7/8 inch), a spacer, and a flange nut (3/8 inch) as shown in Figure 7.

Note: You can use the fasteners from the tooth rake for this step.

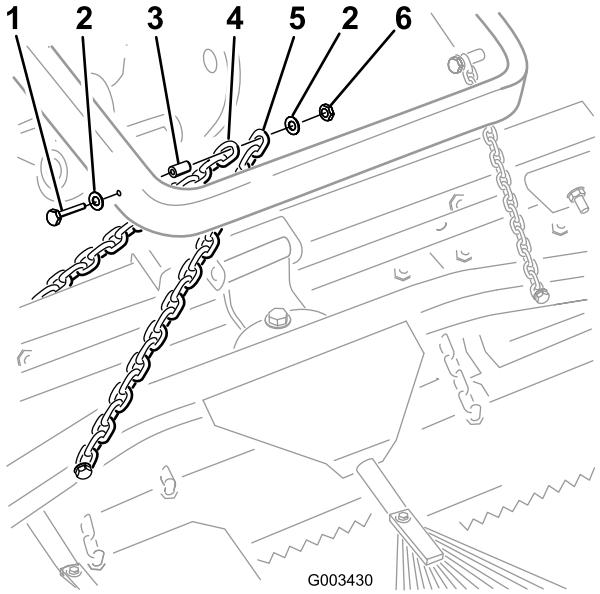

Figure 7

1. Bolt (3/8 x 2-1/2 inch)
2. Washer (3/8 x 7/8 inch)
3. Spacer
4. Tooth rake transport chain
5. Spring rake transport chain
6. Flange nut (3/8 inch)

2

Reading the Documentation and Storing the Loose Parts

Parts needed for this procedure:

1	*Operator's Manual*
1	*Parts Catalog*
2	Bolt (3/8 x 2-1/2 inches)
4	Washer (3/8 x 7/8 inch)
2	Spacer
2	Flange nut (3/8 inch)

Procedure

1. Read the documentation.
2. Store the documentation in a safe place.
3. Store any loose parts for use when mounting the spring rake directly on the traction unit; refer to Installing the Spring Rake on the Traction Unit in Operation , page 7.

Product Overview

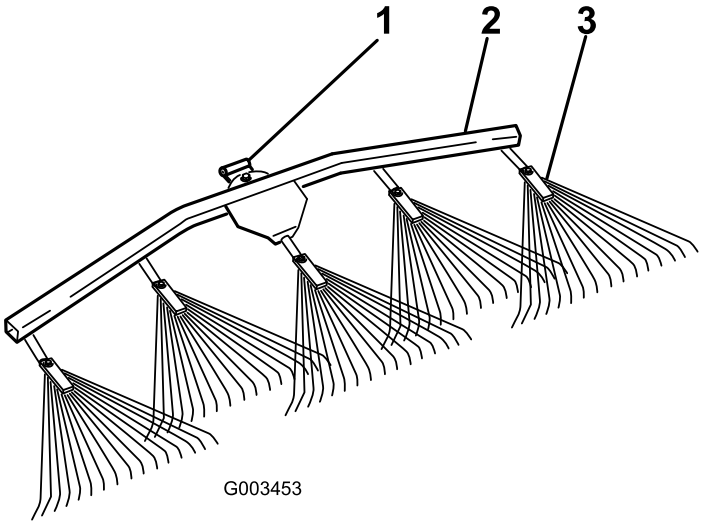

Figure 8

1. Pivot
2. Spring rake hanger
3. Spring rake

Operation

We suggest that you read this **entire section on raking** before actually raking a trap. There are many conditions that will determine the adjustments necessary. The texture and depth of the sand, moisture content, weeds, the amount of compaction; all these conditions can vary from course to course, or even from trap to trap on the same course. Make the adjustments on the rake for optimum results in your particular area.

Training Period

Practice raking in one of the large and level traps on the course. Practice starting and stopping, turning, raising and lowering the rake, entering and leaving the trap, etc. Practice at a moderate engine speed and a slow ground speed. This training period will be beneficial to the operator in gaining confidence in the performance of the machine.

General Raking Information

If the sand is deep enough, you can rake right up to the edge of the trap in level areas.

If the sand feathers out to the turf, stay far enough away from the edge to avoid disturbing the underlying soil.

Do not rake too close to a short steep bank. The sand will merely flow down into the bottom of the trap.

Some touch up with a hand rake may be necessary on steep banks, small pockets, etc.

Note: Do not backup the traction unit with the attachment lowered. Damage to the attachment will occur.

Raking Pattern

The recommended pattern for raking a trap is shown in Figure 9. This pattern avoids unnecessary overlap, holds compaction to a minimum and leaves a neat, attractive pattern on the sand.

Enter the trap straight into the long dimension, where the bank is the least severe. Drive through the center of the trap almost to the end, turn to either direction as sharp as you can, and come right back next to the first pass. Spiral outward as shown in the drawing, and leave the trap at a right angle in a level area.

Leave steep, short banks and small pockets for touch-up with a hand rake.

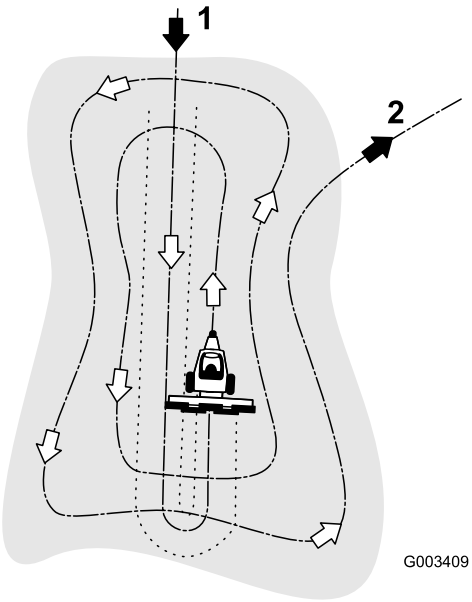

Figure 9

1. Enter a trap straight into the long dimension in a level area.
2. Exit a trap at a right angle in a level area.

Entering and Leaving the Trap

When entering the trap, do not lower the rake until the rake is actually over the sand. This will avoid cutting the turf or dragging grass clippings or other debris into the trap. Lower the rake while the machine is moving.

When leaving the trap, start raising the rake when the front wheel leaves the trap. As the machine moves out, the rake will be lifting and will not drag sand out onto the grass.

The operator will soon gain, through experience and practice, the required timing for entering and leaving the trap properly.

Setting the Transport Position

Complete the following procedure to increase the height of the rake when transporting:

1. Lower the rake and lift assembly as low as possible.
2. Disconnect the chains from the lift arms and reconnect them higher, but no more than 3 links from the free end of chains (when mounted on the back of the tooth rake) or 6 links (when mounted on the back of the traction unit).

   Note: If the chains are secured to the hooks, reconnect at the desired length.

   Note: Transporting the rake with chains shortened beyond the recommended link, may result in damage to the rake pivots.

Note: To ensure proper operation of rake, the chains must be returned to the original slack position before commencing operation.

Installing the Spring Rake on the Traction Unit

1. If the spring rake is connected to a tooth rake, remove it as follows, saving all hardware for future use:

   A. Unhook or disconnect the transport chains from the lift arm as shown in Figure 10 or Figure 11.

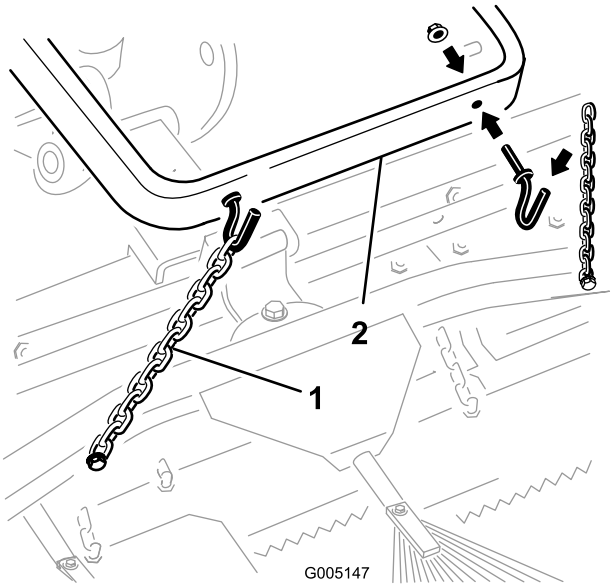

Figure 10

1. Transport chain
2. Lift arm

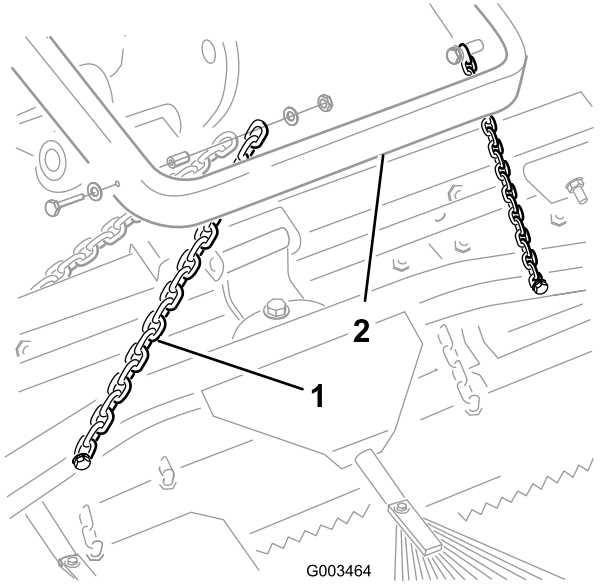

Figure 11

1. Transport chain
2. Lift arm

B. Remove the cotter pin, washers, and clevis pin securing the curved pivot bracket to the tooth rake (Figure 12).

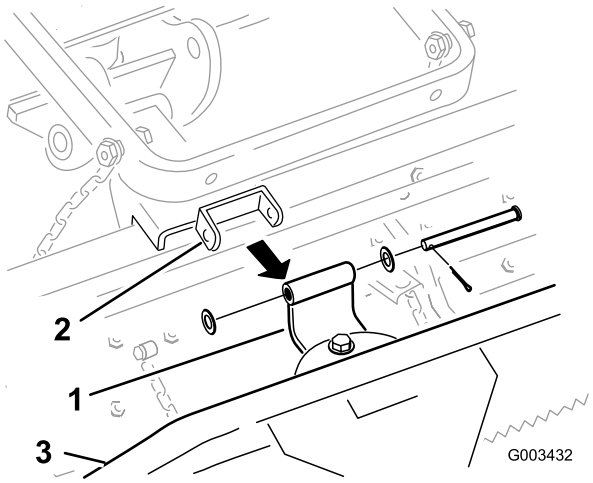

Figure 12

1. Curved pivot bracket
2. Tooth rake bracket
3. Spring rake

Note: Steps 1C and 2 are not required if the straight pivot bracket is mounted on the spring rake.

C. Remove the curved pivot bracket and fasteners from the spring rake (Figure 12).

2. Secure the straight pivot bracket to the spring rake with the shoulder bolt, washer (.531 x 1.063), washer (.469 x .922), and locknut (7/16 inch) as shown in Figure 13.

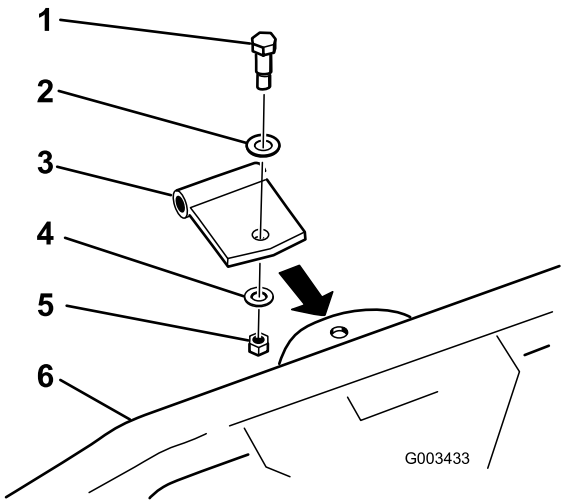

Figure 13

1. Shoulder bolt
2. Washer (0.531 x 1.063)
3. Straight pivot bracket
4. Washer (0.469 x 0.922)
5. Locknut (7/16 inch)
6. Spring rake

3. Connect the straight pivot bracket to the adapter as illustrated in Figure 14 with a clevis pin (1/2 x 4-1/2 inches), 2 washers (0.531 x 1.063), and a cotter pin.

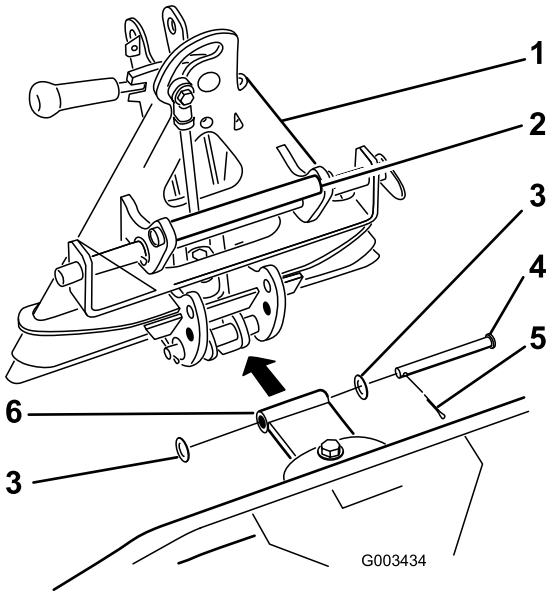

Figure 14

1. Adapter
2. Handle
3. Washer (0.531 x 1.063)
4. Clevis pin (1/2 x 4-1/2 inches)
5. Cotter pin
6. Straight pivot bracket

4. Remove any attachment from the rear of the machine.

5. Back the traction unit into position in front of the attachment adapter. Lower the traction unit adapter.

Note: Make sure the locking lever is pivoted to the left (unlocked position) as viewed from the rear of the machine.

6. Slide the attachment adapter onto the traction adapter.

If you are not careful, you could pinch your fingers between the attachment and traction unit adapters.

Always lift and move the attachment using the handle on the back of the attachment adapter (Figure 14).

7. Pivot the locking lever to the right to lock the adapters together.
8. Secure the third link of each chain to the inside of the lift arm using the bolts, washers, spacers, and locknuts previously removed (Figure 15).

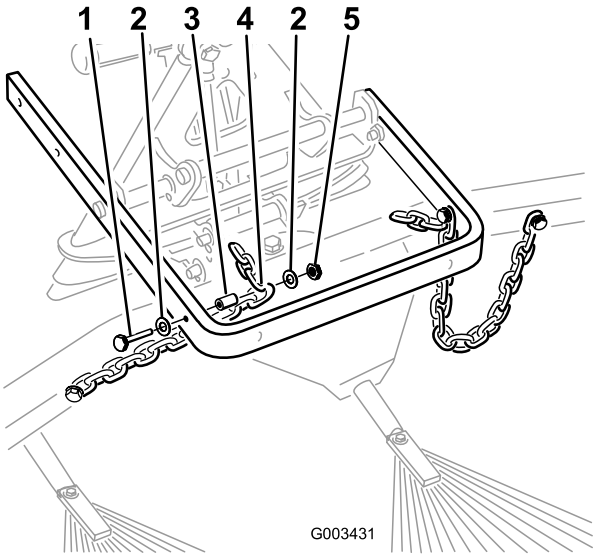

Figure 15

1. Bolt (3/8 x 2-1/2 inches)
2. Washer (3/8 x 7/8 inch)
3. Spacer
4. Third link of chain
5. Locknut (3/8 inch)

Note: If the chains are secured to the hooks, reconnect at the desired length.

Note: For proper operation of the rake, the chains must be slack when the rake is in the lowered (operating) position.

9. With the rake mounted and secured on the traction unit, measure the gap between the top washer and the spacer in the link assembly on the attachment adapter as shown in Figure 16.

The gap between the washer and the shoulder should be 0.060 to 0.080 inch (Figure 16).

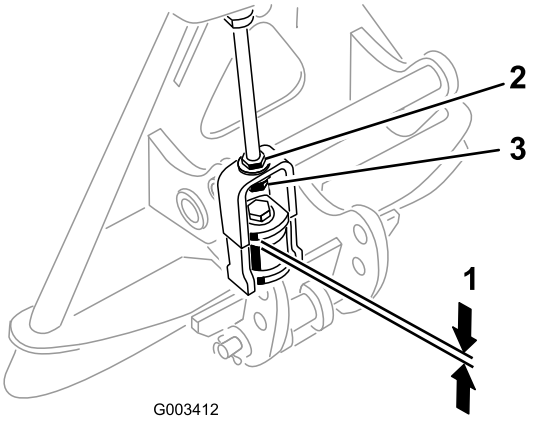

Figure 16

1. 0.060 to 0.080 inch
2. Jam nut
3. Adjustment nut

10. If the gap is not correct, loosen the jam nut and tighten or loosen the adjustment nut on the link assembly as needed to change the gap (Figure 16).

Adjusting the Rake Angle

If the rake is installed directly to the traction unit, you can change the angle of the rake to increase or decrease its aggressiveness in the sand. Mount the rake pivot to the bottom holes in the attachment adapter brackets (Figure 17) for less aggressive raking or the top holes for more aggressive raking.

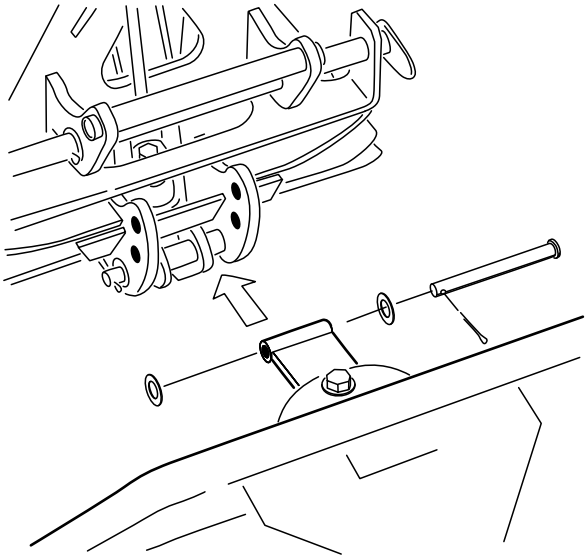

Figure 17

1. More aggressive
2. Less aggressive

Maintenance

Inspecting and Cleaning the Rake and Traction Unit

When the raking operation is completed, clean the machine thoroughly. Since this machine is used primarily in sand, and sand is extremely abrasive, the sand should be flushed off after each use. If the machine is cleaned frequently, (before the sand has a chance to cake), it can be cleaned with a stream of water from a hose with the nozzle removed. A high pressure stream could drive the sand into wear areas where it could act as a grinding compound.

Note: If the attachment adapter becomes stuck to the traction unit adapter, insert a pry bar/screwdriver into the pry slot to disengage the parts (Figure 18).

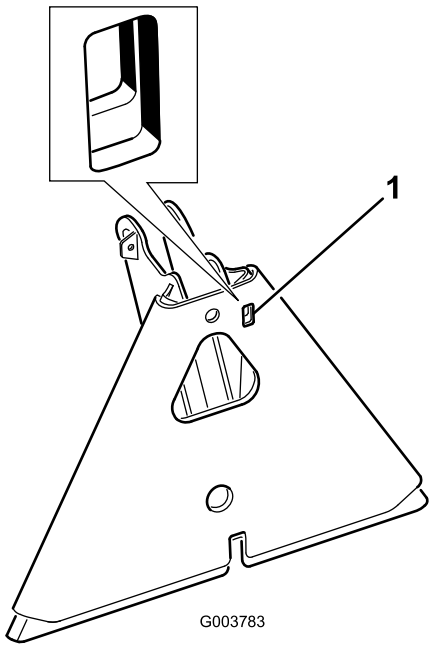

Figure 18

1. Pry slot

Greasing the Attachment Adapter

If you have purchased an attachment adapter for your spring rake, it may occasionally require greasing. If the locking lever on the attachment adapter does not pivot freely and easily, apply a light coat of grease to the area shown in Figure 19.

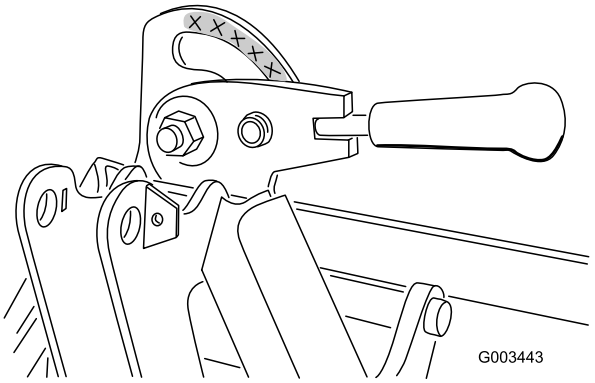

Figure 19

Toro General Commercial Products Warranty

A Two-Year Limited Warranty

Conditions and Products Covered

The Toro Company and its affiliate, Toro Warranty Company, pursuant to an agreement between them, jointly warrant your Toro Commercial Product ("Product") to be free from defects in materials or workmanship for two years or 1500 operational hours*, whichever occurs first. This warranty is applicable to all products with the exception of Aerators (refer to separate warranty statements for these products). Where a warrantable condition exists, we will repair the Product at no cost to you including diagnosis, labor, parts, and transportation. This warranty begins on the date the Product is delivered to the original retail purchaser.

** Product equipped with hour meter*

Instructions for Obtaining Warranty Service

You are responsible for notifying the Commercial Products Distributor or Authorized Commercial Products Dealer from whom you purchased the Product as soon as you believe a warrantable condition exists. If you need help locating a Commercial Products Distributor or Authorized Dealer, or if you have questions regarding your warranty rights or responsibilities, you may contact us at:

Toro Commercial Products Service Department
Toro Warranty Company
8111 Lyndale Avenue South
Bloomington, MN 55420-1196
952-888-8801
E-mail: commercial.warrnty@toro.com

Owner Responsibilities

As the Product owner, you are responsible for required maintenance and adjustments stated in your *Operator's Manual*. Failure to perform required maintenance and adjustments can be grounds for disallowing a warranty claim.

Items and Conditions Not Covered

Not all product failures or malfunctions that occur during the warranty period are defects in materials or workmanship. This warranty does not cover the following:

- Product failures which result from the use of non-Toro replacement parts, or from installation and use of add-on, or modified non-Toro branded accessories and products. A separate warranty may be provided by the manufacturer of these items.
- Product failures which result from failure to perform recommended maintenance and/or adjustments. Failure to properly maintain your Toro product per the Recommended Maintenance listed in the *Operator's Manual* can result in claims for warranty being denied.
- Product failures which result from operating the Product in an abusive, negligent or reckless manner.
- Parts subject to consumption through use unless found to be defective. Examples of parts which are consumed, or used up, during normal Product operation include, but are not limited to, brakes pads and linings, clutch linings, blades, reels, bed knives, tines, spark plugs, castor wheels, tires, filters, belts, and certain sprayer components such as diaphragms, nozzles, and check valves, etc.
- Failures caused by outside influence. Items considered to be outside influence include, but are not limited to, weather, storage practices, contamination, use of unapproved coolants, lubricants, additives, fertilizers, water, or chemicals, etc.
- Normal noise, vibration, wear and tear, and deterioration.
- Normal "wear and tear" includes, but is not limited to, damage to seats due to wear or abrasion, worn painted surfaces, scratched decals or windows, etc.

Parts

Parts scheduled for replacement as required maintenance are warranted for the period of time up to the scheduled replacement time for that part. Parts replaced under this warranty are covered for the duration of the original product warranty and become the property of Toro. Toro will make the final decision whether to repair any existing part or assembly or replace it. Toro may use remanufactured parts for warranty repairs.

Note Regarding Deep Cycle Battery Warranty:

Deep cycle batteries have a specified total number of kilowatt-hours they can deliver during their lifetime. Operating, recharging, and maintenance techniques can extend or reduce total battery life. As the batteries in this product are consumed, the amount of useful work between charging intervals will slowly decrease until the battery is completely worn out. Replacement of worn out batteries, due to normal consumption, is the responsibility of the product owner. Battery replacement may be required during the normal product warranty period at owner's expense.

Maintenance is at Owner's Expense

Engine tune-up, lubrication cleaning and polishing, replacement of filters, coolant, and completing Recommended Maintenance are some of the normal services Toro products require that are at the owner's expense.

General Conditions

Repair by an Authorized Toro Distributor or Dealer is your sole remedy under this warranty.

Neither The Toro Company nor Toro Warranty Company is liable for indirect, incidental or consequential damages in connection with the use of the Toro Products covered by this warranty, including any cost or expense of providing substitute equipment or service during reasonable periods of malfunction or non-use pending completion of repairs under this warranty. Except for the Emissions warranty referenced below, if applicable, there is no other express warranty. All implied warranties of merchantability and fitness for use are limited to the duration of this express warranty.

Some states do not allow exclusions of incidental or consequential damages, or limitations on how long an implied warranty lasts, so the above exclusions and limitations may not apply to you. This warranty gives you specific legal rights, and you may also have other rights which vary from state to state.

Note regarding engine warranty:

The Emissions Control System on your Product may be covered by a separate warranty meeting requirements established by the U.S. Environmental Protection Agency (EPA) and/or the California Air Resources Board (CARB). The hour limitations set forth above do not apply to the Emissions Control System Warranty. Refer to the Engine Emission Control Warranty Statement printed in your *Operator's Manual* or contained in the engine manufacturer's documentation for details.

Countries Other than the United States or Canada

Customers who have purchased Toro products exported from the United States or Canada should contact their Toro Distributor (Dealer) to obtain guarantee policies for your country, province, or state. If for any reason you are dissatisfied with your Distributor's service or have difficulty obtaining guarantee information, contact the Toro importer.

Part No. 374-0031 Rev. D