FORM NO. 3316–181

TORO®

MODEL NO. 26620B–3900001 & UP

PARTS CATALOG

53cm REAR BAGGING MOWER

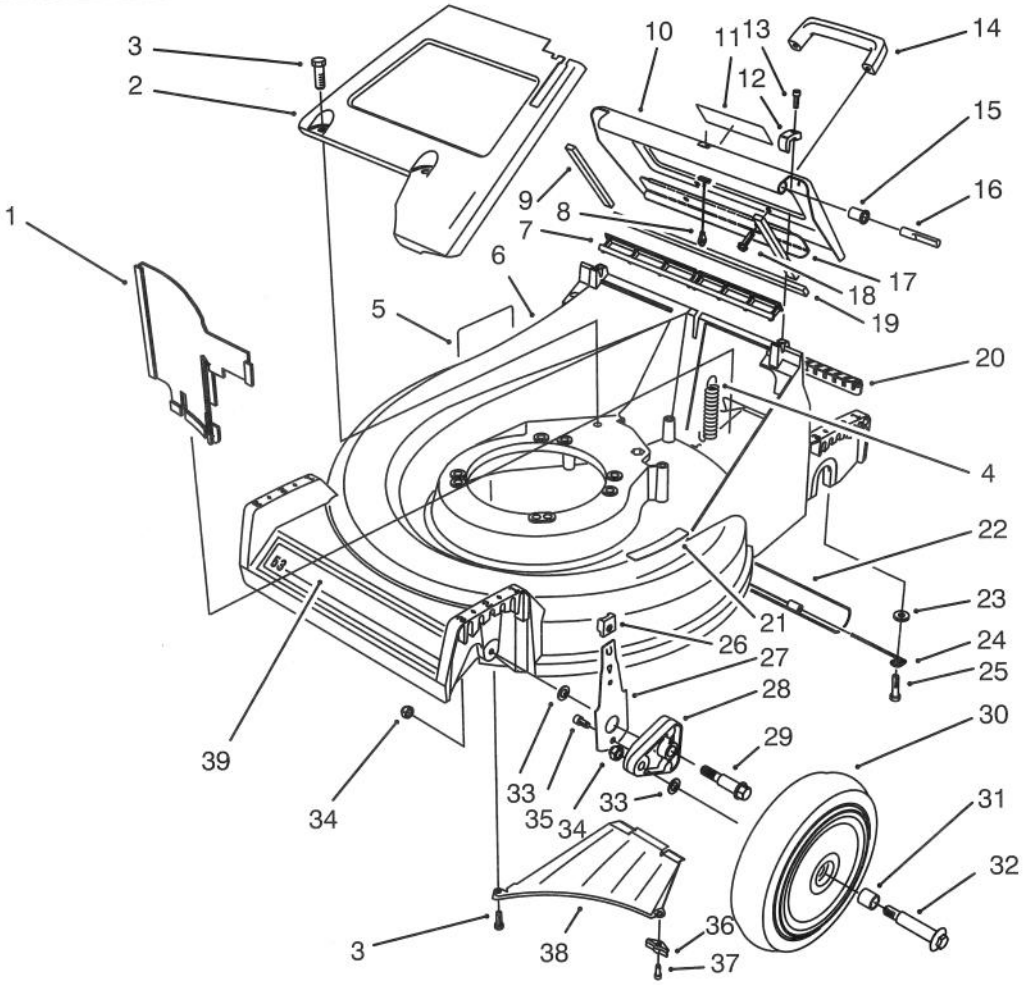

C–1556

HOUSING ASSEMBLY

Ref. No.	Part No.	Description	No. Used
1	66–0020	Panel – Vertical	1
2	65–5660	Panel – Screen	1
3	32144–70	Screw – Cap Hex. Hd.	3
4	65–5360	Spring – Extension	1
5	62–3860	Decal – Danger	1
6	13–5869	Housing – 53cm (Incl. Ref. #5 & 21)	1
7	65–5160	Seal – Door	1
8	65–5370	Cable – Door	1
9	65–5480	Seal – Door Side	2
10	13–5889	Door – Discharge (Incl. Ref. #9, 11 & 19)	1
11	71–8370	Decal – Danger	1
12	65–5140	Clamp – Hinge	2
13	65–5210	Screw – Hex. Socket Hd.	2

Ref. No.	Part No.	Description	No. Used
14	65–5100	Handle – Door	1
15	65–5460	Bushing – Door	2
16	65–5290	Pin – Hinge	2
17	66–0610	Brace – Door	1
18	46–8091	Screw – Handle	2
19	65–5490	Seal – Door (End)	1
20	65–5150	Cover – Access	1
21	62–3950	Decal – Step Pad	1
22	65–5350	Shield – Trailing	1
23	3256–23	Washer – Flat	2
24	76–1980	Hanger – Shield	2
25	5–2490	Screw – Shoulder	2
26	25–7740	Knob – Spring Arm	2
27	66–0540	Arm – Front Spring	2
28	66–0580	Arm – Front Pivot	2

© The TORO Company –1993
All Rights Reserved

3316–181

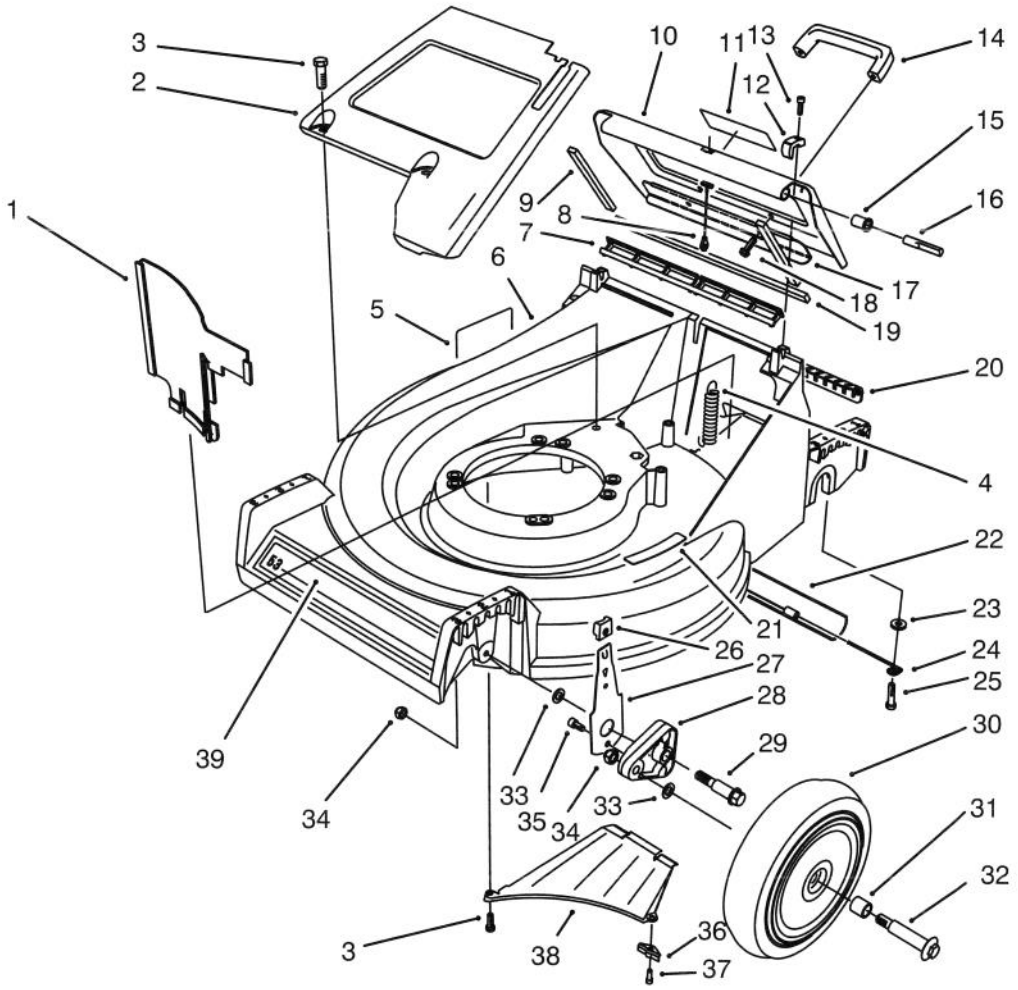

C–1556

HOUSING ASSEMBLY (Continued)

Ref. No.	Part No.	Description	No. Used
29	66–0560	Screw – Shoulder	2
30	14–9949	Wheel & Tire Assembly (Incl. Ref. #31)	2
31	27–6250	Bushing – Wheel	4
32	27–6231	Bolt – Wheel	2
33	40–1940	Washer – Wheel	4

Ref. No.	Part No.	Description	No. Used
34	3296–6	Nut – Lock	4
35	65–5220	Screw – Cap Socket Hd.	2
36	66–0640	Bracket – Discharge	1
37	65–5221	Screw – Bracket	1
38	65–5010	Ramp – Discharge	1
39	71–9870	Decal – 53cm	1

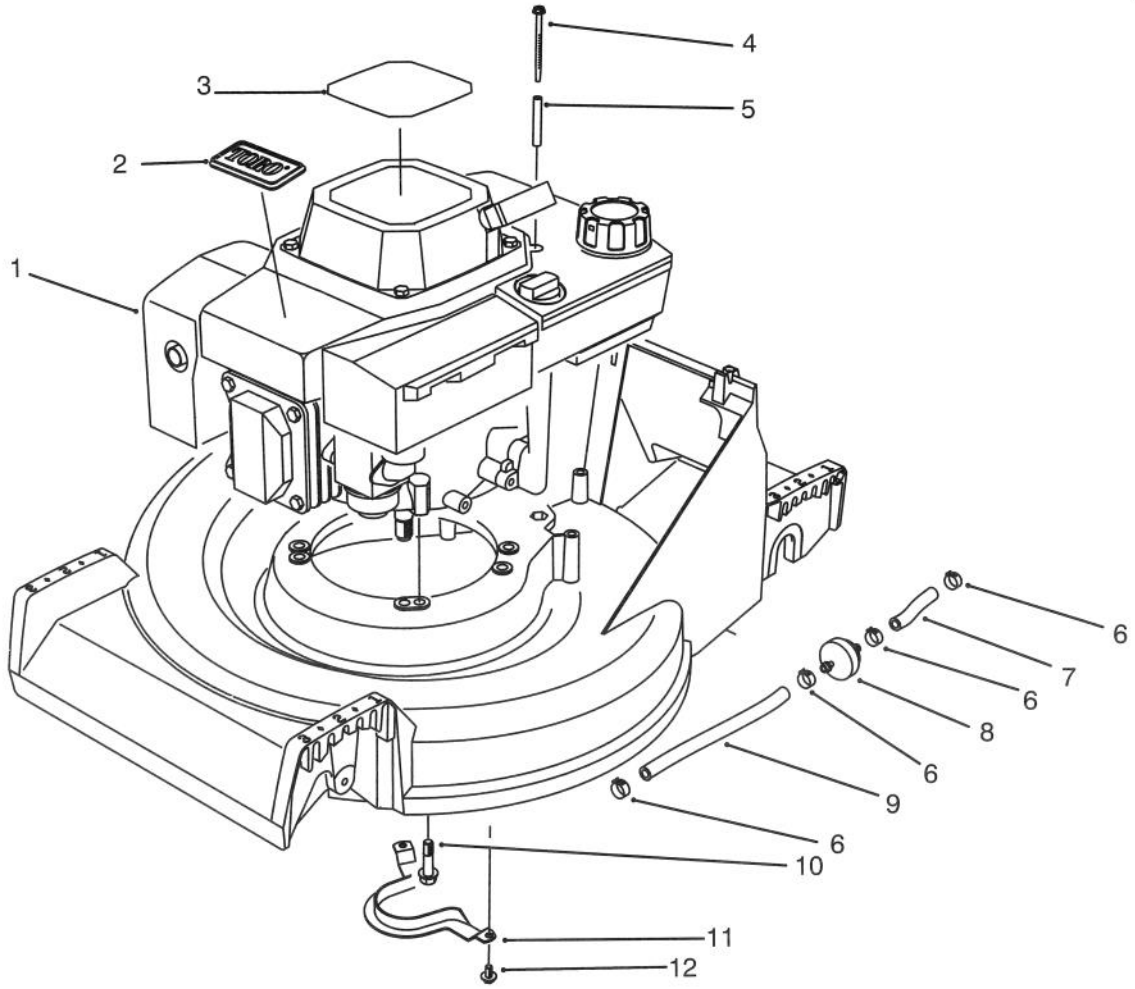

C–0181

ENGINE ASSEMBLY

Ref. No.	Part No.	Description	No. Used
1	72–4141	Engine – OHV	1
2	46–8290	Plate – TORO Logo	1
3	57–3120	Decal – Recoil	1
4	56–6610	Screw – Thread Forming	2
5	57–3830	Spacer – Tubular	2
6	2412–95	Clamp – Fuel Line	4
7	51–3211	Line – Fuel	1
8	56–6360	Filter – Fuel	1
9	51–3214	Line – Fuel	1

Ref. No.	Part No.	Description	No. Used
10	32144–102	Screw – Cap Hex. Hd.	3
11	66–0570	Guide – Belt	1
12	32144–70	Screw – Cap Hex. Hd.	2
*	75–9850	Tube – Oil Drain	1
*	66–1970	Wrench – Oil Drain	1
*	66–1971	Pin – Oil Drain Wrench	1
*	62–6770	Wrench	1
*	46–9620	Wrench – Spark Plug	1
*	46–9621	Pin – Spark Plug Wrench	1

*Not Illustrated

3316–181

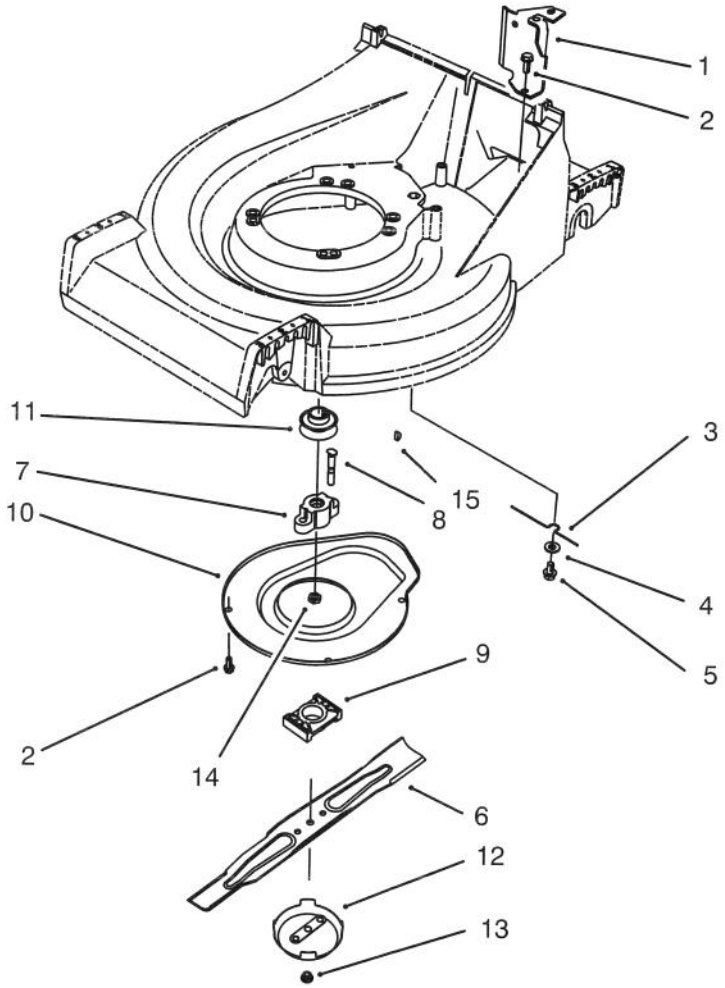

C–1557

BLADE ASSEMBLY

Ref. No.	Part No.	Description	No. Used
1	66–0030	Bracket – Cable Support	1
2	32144–70	Screw – Cap Hex. Hd.	5
3	66–0620	Retainer – Belt	1
4	3256–24	Washer – Flat	1
5	32144–15	Screw – Hex. Flange Hd.	1
6	62–7700	Blade – 21”	1
7	62–5920	Hub – Adapter	1
8	42–3190	Bolt – Blade	2

Ref. No.	Part No.	Description	No. Used
9	62–4280	Retainer – Blade	1
10	65–5200	Cover	1
11	62–7560	Pulley – Engine	1
12	80–2770	Cup – Anti Scalp	1
13	54–9190	Nut – flange Lock	2
14	3296–33	Nut – Lock	1
15	3257–3	Key – Woodruff	1
*	66–0680	Decal – French Regulations	1

*Not Illustrated

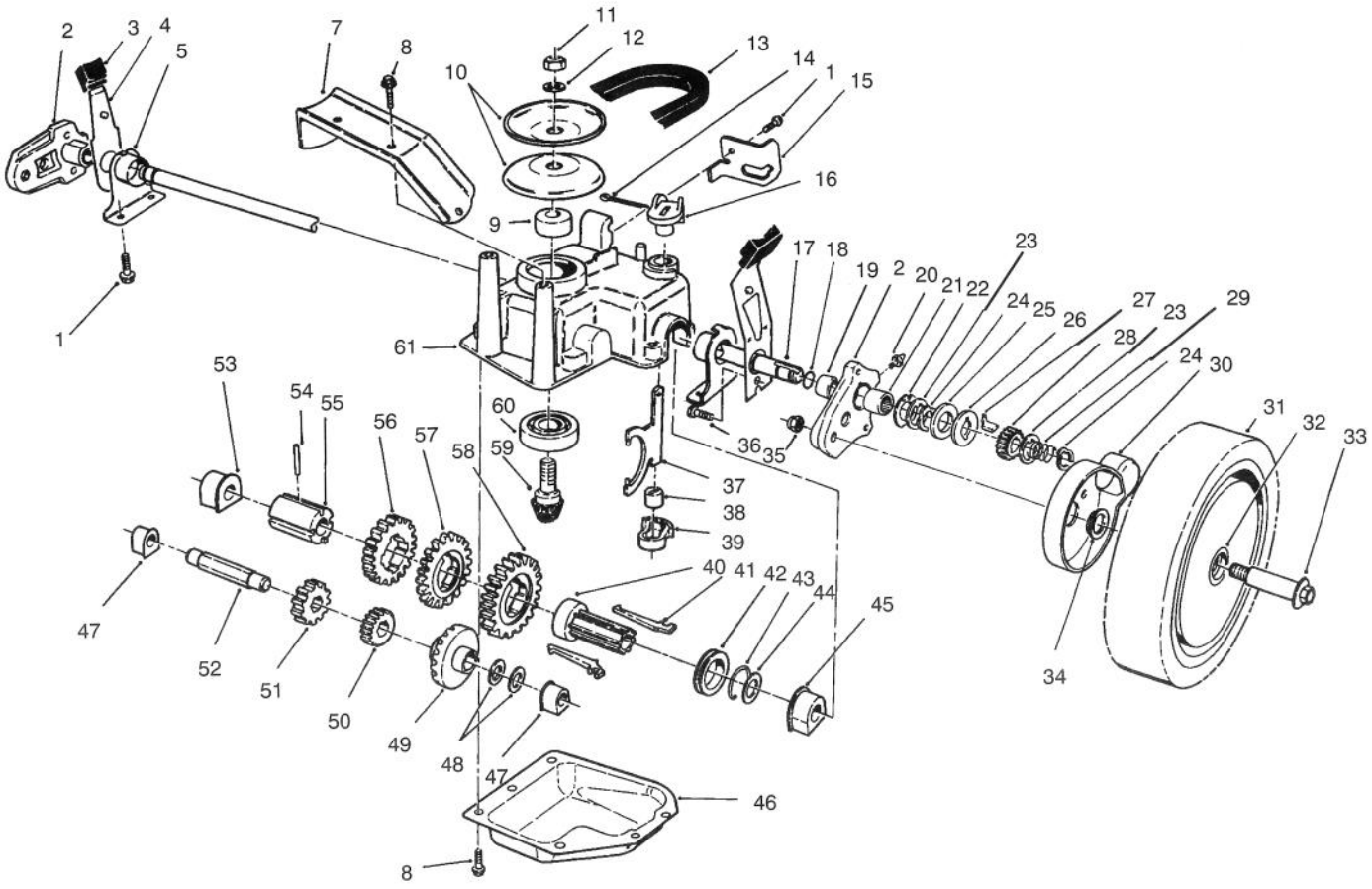

C–1555

GEAR CASE ASSEMBLY

Ref. No.	Part No.	Description	No. Used
1	32144–70	Screw – Hex. Washer Hd.	3
2	65–5042	Pivot Arm Assembly (Incl. Ref. #19–21)	2
3	25–7740	Knob – Arm	2
4	65–5440	Spring Arm Assembly	2
5	66–0360	Cap – End	2
7	65–5190	Bracket – Belt Guide	1
8	49–2040	Screw – Self Tapping	8
9	62–6660	Spacer	1
10	60–8840	Pulley – Half	2
11	3296–5	Nut – Lock	1
12	3256–24	Washer – Flat	1
13	66–0210	V–Belt	1
14	3272–5	Pin – Cotter	1
15	76–2930	Retainer – Cable	1
16	76–0920	Lever – Shift	1
17	65–4770	Shaft – Output	1
18	237–153	Seal – O–Ring	2
19	47–2900	Bushing – Sleeve	2
20	302–56	Fitting – Grease	2

Ref. No.	Part No.	Description	No. Used
21	48–2060	Bearing –Needle	2
22	65–4730	Washer – Thrust (Inner)	2
23	65–4740	Washer – Thrust (Keyed)	4
24	65–2720	Ring – Retaining	4
25	65–4710	Ring – Friction	2
26	65–4760	Washer –Clutch	2
27	66–6050	Key – Rocking (L.H.)	1
*	66–6040	Key – Rocking (R.H.)	1
28	65–4750	Pinion	2
29	65–4720	Spring – Compression	2
30	74–1660	Cover – Wheel	2
31	14–9959	Wheel Tire & Gear Assy. (Incl. Ref. #32)	2
32	27–6250	Bushing – Wheel	4
33	27–6231	Bolt – Wheel	2
34	74–1671	Spacer – Wheel Cover	2
35	3296–6	Nut – Lock	2
36	65–5220	Screw – Cap Socket Hd.	2
37	60–8870	Yoke – Shift	1
38	29–9570	Bushing – Yoke	1

*Not Illustrated

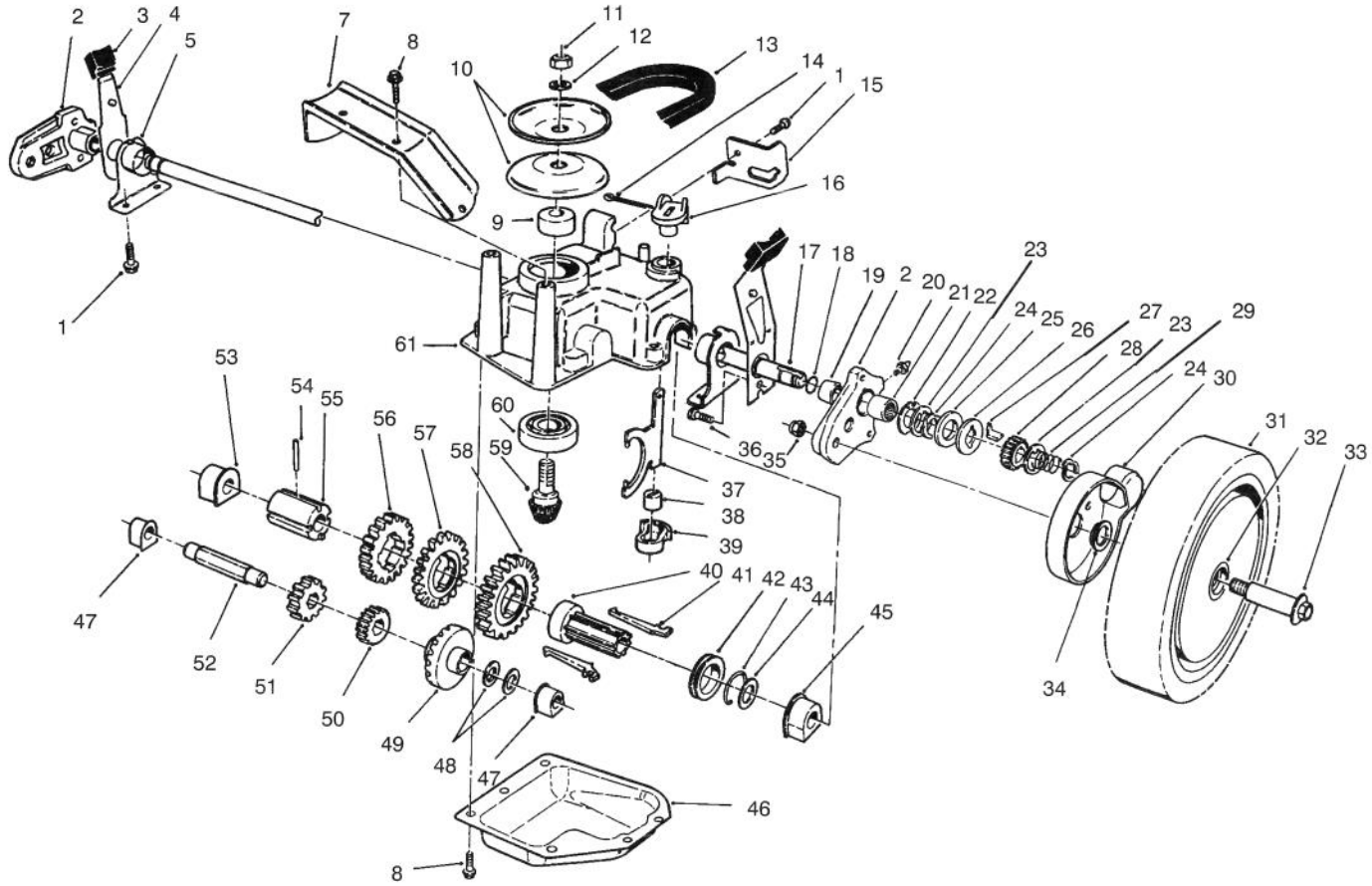

C–1555

GEAR CASE ASSEMBLY (Continued)

Ref. No.	Part No.	Description	No. Used
39	60–8810	Retainer – Shift Fork	1
40	76–0780	Sleeve – Shift Key	1
41	76–0760	Key – Shift	2
42	76–0770	Collar – Shift	1
43	65–5250	Clip – Spring	1
44	36–4780	Washer – Thrust	1
45	60–8770	Bushing – Output Shaft	1
46	60–8730	Cover – Gear Case	1
47	60–8750	Bushing – Intrmdt. Shaft	2
48	36–4791	Washer – Thrust	2
49	55–3760	Gear – Pinion 15T	1
50	55–3780	Gear – Pinion 20T	1

Ref. No.	Part No.	Description	No. Used
51	55–3800	Gear – Pinion 25T	1
52	60–8800	Shaft – Intermediate	1
53	60–8850	Bushing – Output Shaft	1
54	32121–120	Pin – Coil	1
55	60–8790	Sleeve – Gear	1
56	55–3810	Gear – 39T (3rd Gear)	1
57	55–3790	Gear – 44T (2nd Gear)	1
58	55–3770	Gear – 49T (1st Gear)	1
59	60–8890	Pinion – Bevel	1
60	38–7820	Bearing – Ball	1
61	60–8710	Case – Gear (Upper)	1
*	62–6673	Gear Case Assy. Complete	1

*Not Illustrated

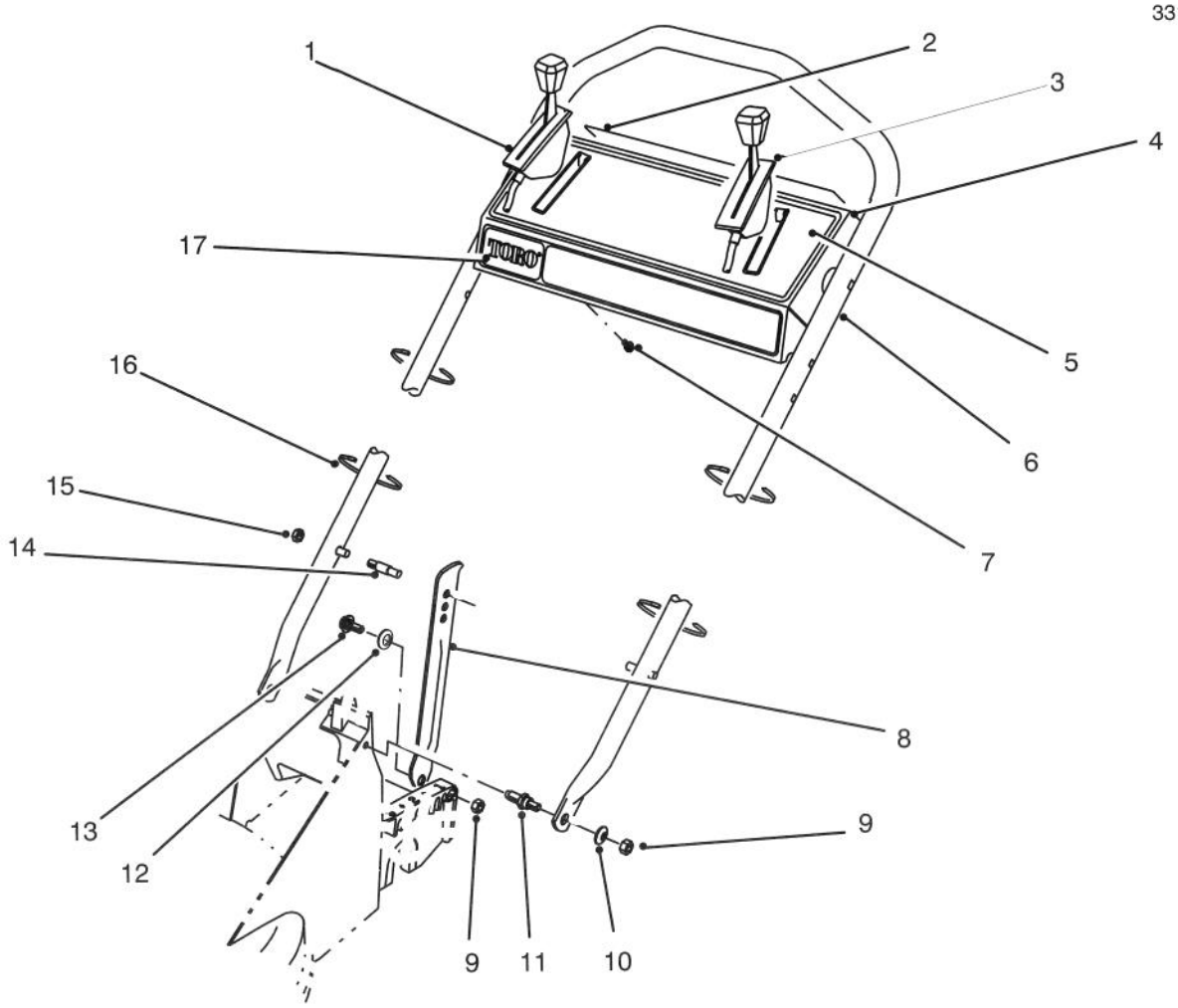

C–0180

HANDLE ASSEMBLY

Ref. No.	Part No.	Description	No. Used
1	76–2713	Control – Ground Speed	1
2	66–1790	Decal – Danger	1
3	66–0236	Control – Throttle Bend Type #2 Sheath Lg. 44–3/4" (113.7cm) Wire Lg. 2–1/2" (6.4cm)	1
4	13–6019	Control Panel Assembly (Incl. Ref. #2 & 5)	1
5	66–0290	Decal – Instruction	1
6	84–8331	Handle	1

Ref. No.	Part No.	Description	No. Used
7	32104–76	Screw – Self Tapping	5
8	65–5730	Latch – Handle	2
9	3296–29	Nut – Lock	4
10	3256–23	Washer – Flat	2
11	66–0450	Screw – Shoulder Stud	2
12	256–313	Washer – Nylon	2
13	5–2490	Screw – Shoulder	2
†14	49–2750	Pin – Handle	2
†15	3296–47	Nut – Lock	2
16	3290–378	Tie – Cable	4
17	66–1770	Decal – TORO	1

†Service Replacement Parts

3316–181

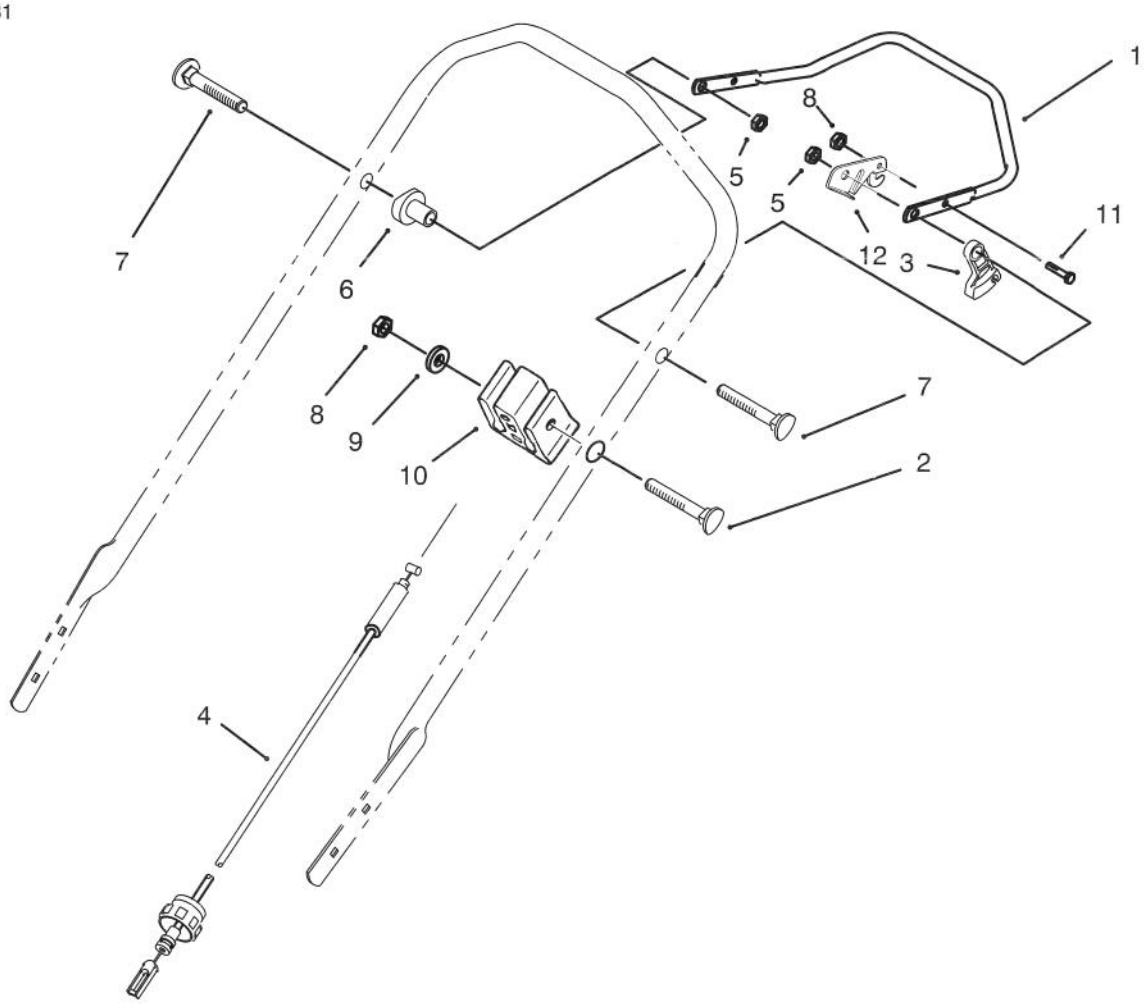

C–1554

TRACTION CONTROL ASSEMBLY

Ref. No.	Part No.	Description	No. Used
1	52–7430	Control Bar Assembly	1
2	46–6432	Screw – Handle	1
3	46–5520	Lever – Traction	1
4	71–0620	Cable – Traction	1
5	3296–58	Nut – Lock	2
6	66–0330	Support – Spacer	2

Ref. No.	Part No.	Description	No. Used
7	17–9426	Screw – Handle	2
8	3296–42	Nut – Lock	2
9	3256–22	Washer – Flat	1
10	71–0960	Support – Cable	1
11	321–3	Screw – Cap Hex. Hd.	1
12	46–8800	Lever – Control	1

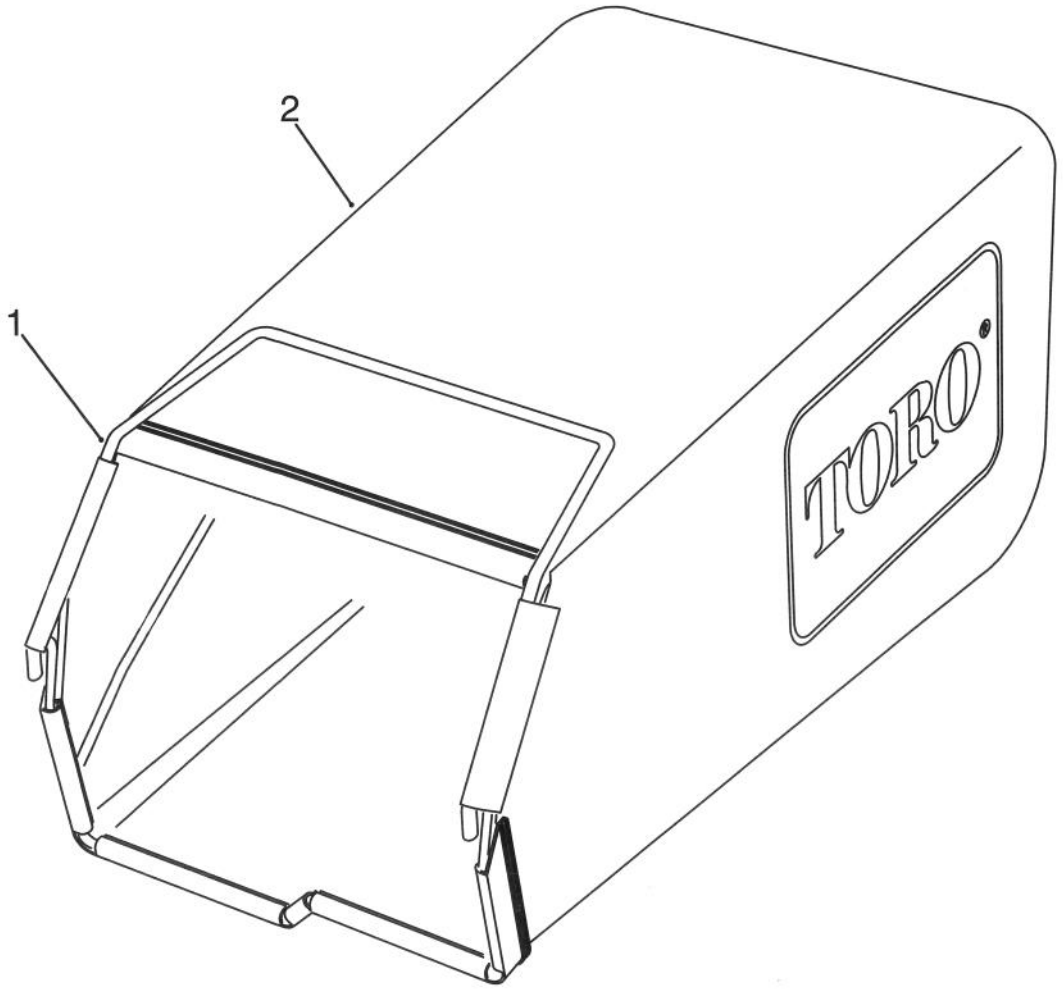

C–0819

GRASS BAG ASSEMBLY

Ref. No.	Part No.	Description	No. Used
1	76–1790	Frame – Grass Bag	1

Ref. No.	Part No.	Description	No. Used
2	66–0010	Bag	1

3316–181

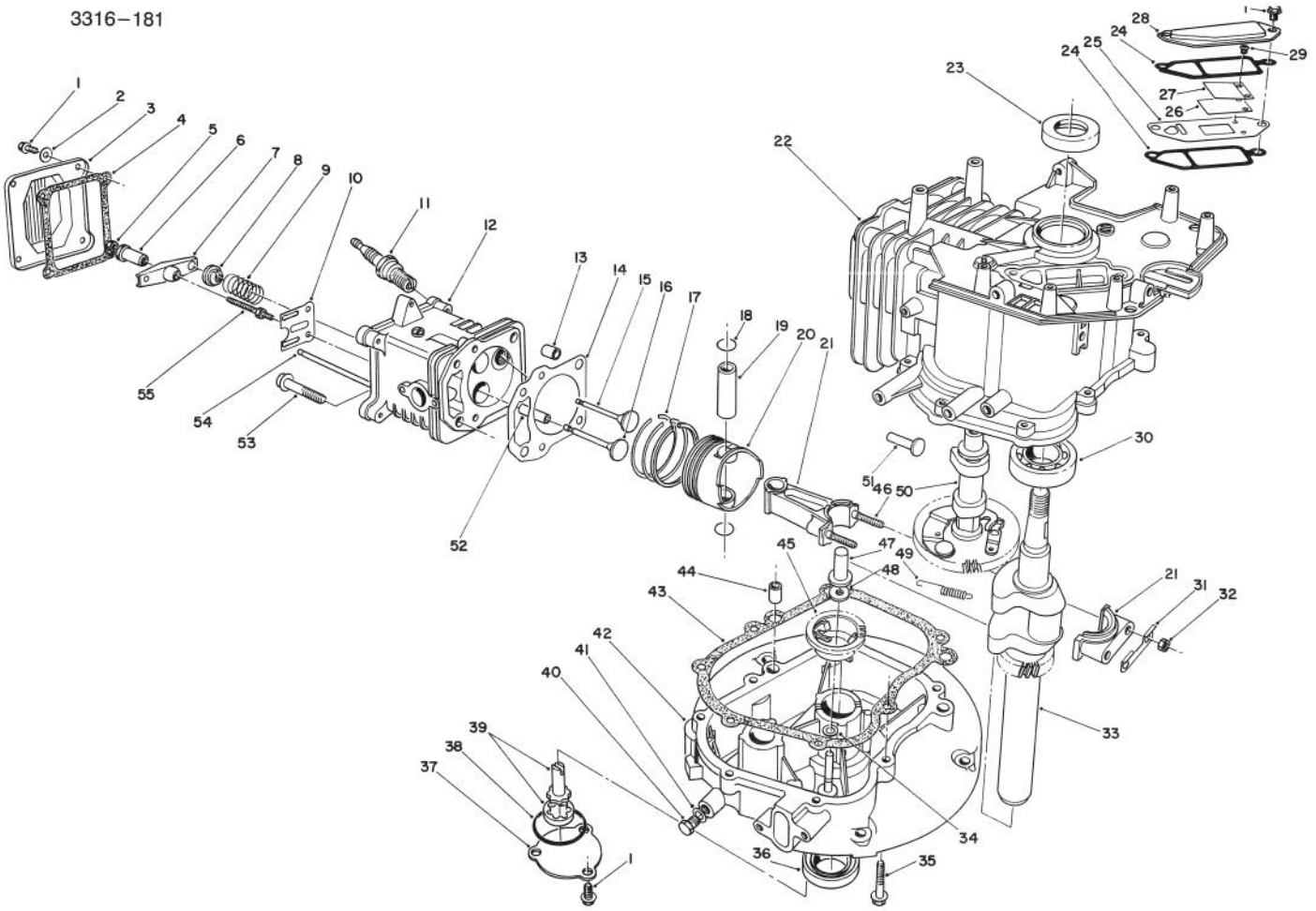

C–0174

CRANKCASE ASSEMBLY
(Engine No. VMM1–2)

Ref. No.	Part No.	Description	No. Used
1	81–1170	Bolt	9
2	81–3790	Washer	4
3	81–3780	Cover – Rocker Arm	1
4	81–3770	Gasket – Cover	1
5	81–3760	Nut – Jam	2
6	81–3750	Pivot – Rocker Arm	2
7	81–3740	Arm – Rocker	2
8	81–3730	Retainer – Valve Spring	2
9	81–3720	Spring – Valve	2
10	81–3710	Guide – Push Rod	1
11	81–3250	Plug – Spark	1
12	81–5540	Head – Cylinder (Incl. Ref. #52)	1
*	81–5730	Cylinder Head Assembly (Incl. Ref. #1–10, 12 & 52–55)	1
13	81–3690	Pin – Dowel	2
14	81–4710	Gasket – Cylinder Head	1
*	81–3820	Gasket Set	1
15	81–3660	Valve – Exhaust	1

Ref. No.	Part No.	Description	No. Used
16	81–3670	Valve – Intake	1
17	81–3650	Piston Ring Set	1
18	50–0960	Circlip	2
19	81–3630	Pin – Piston	1
20	81–3620	Piston	1
21	81–3390	Connecting Rod Assembly (Incl. Ref. #31, 32 & 46)	1
22	81–3280	Block – Engine (Incl. Ref. #23 & 30)	1
23	81–3290	Seal – Upper Crankshaft	1
24	81–3300	Gasket – Breather	2
25		Plate – Breather	1
26		Valve – Reed	1
*	81–3370	Reed Valve Assembly (Incl. Ref. # 25 & 27–29)	1
27		Retainer – Reed Valve	1
28	81–3320	Cover – Breather	1
29		Screw – Reed Valve	2
30	81–3380	Bearing – Ball	1
31	81–3400	Plate – Lock	1

*Not Illustrated

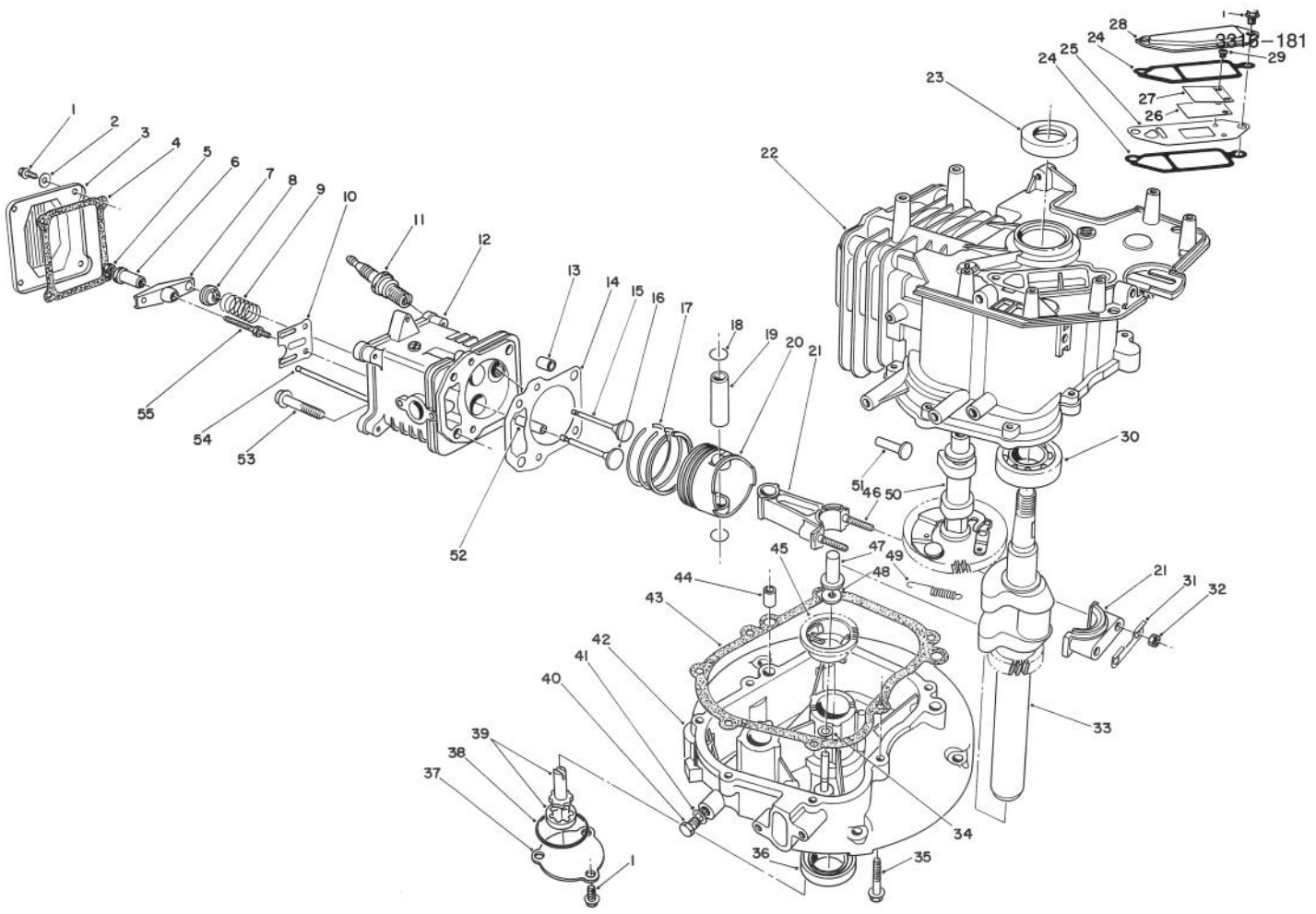

CRANKCASE ASSEMBLY (Continued)
(Engine No. VMM1–2)

Ref. No.	Part No.	Description	No. Used
32	50–0510	Nut	2
33	81–3430	Crankshaft	1
34	81–3440	Washer	1
35	81–3450	Bolt	7
36	81–3460	Seal – Lower Crankshaft	1
37	81–3470	Cover – Oil Pump	1
38	81–3480	Seal – O–Ring	1
39	81–3490	Oil Pump Assembly	1
40	81–4970	Plug – Oil Drain	1
41	81–3510	Gasket – Oil Plug	1
42	81–3520	Crankcase – Lower	1
43	81–3530	Gasket – Crankcase	1
44	50–0450	Pin – Dowel	2

Ref. No.	Part No.	Description	No. Used
45	81–3550	Governor Flyweight Assy.	1
46	81–3610	Stud – Connecting Rod	2
47	81–3560	Plunger – Governor	1
48	81–3570	Washer	1
49	81–3580	Spring – Comp. Release	1
50	81–5550	Camshaft Assembly (Incl. Ref. #49)	1
51	81–3600	Tappet	2
52	81–3830	Guide – Valve	2
53	50–0190	Bolt	4
54	81–3810	Rod – Push	2
55	81–3800	Stud – Rocker Arm	2
*	13–5929	Short Block Assembly	1

*Not Illustrated

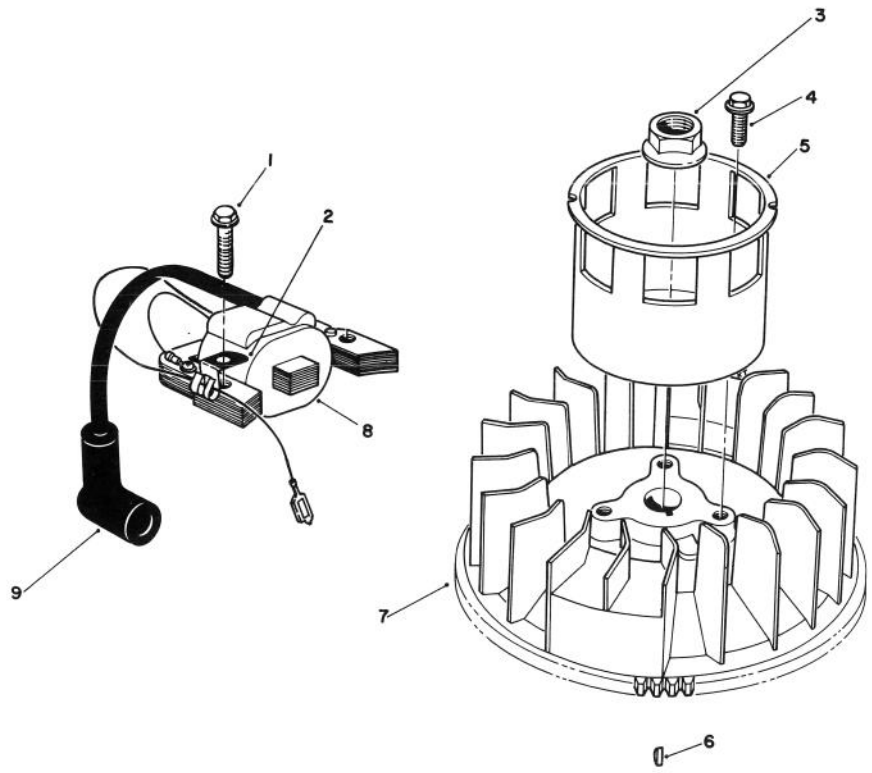

T–0723

MAGNETO & FLYWHEEL ASSEMBLY (Engine No. VMM1–2)

Ref. No.	Part No.	Description	No. Used
1	53–0860	Bolt	2
2	81–1480	Clamp	1
3	81–3890	Nut	1
4	81–1300	Bolt	3
5	81–3910	Cup – Starter	1

Ref. No.	Part No.	Description	No. Used
6	81–3930	Key – Flywheel	1
7	81–3920	Flywheel	1
8	81–5580	Magneto Coil Assembly	1
9	81–3860	Cover – Spark Plug	1

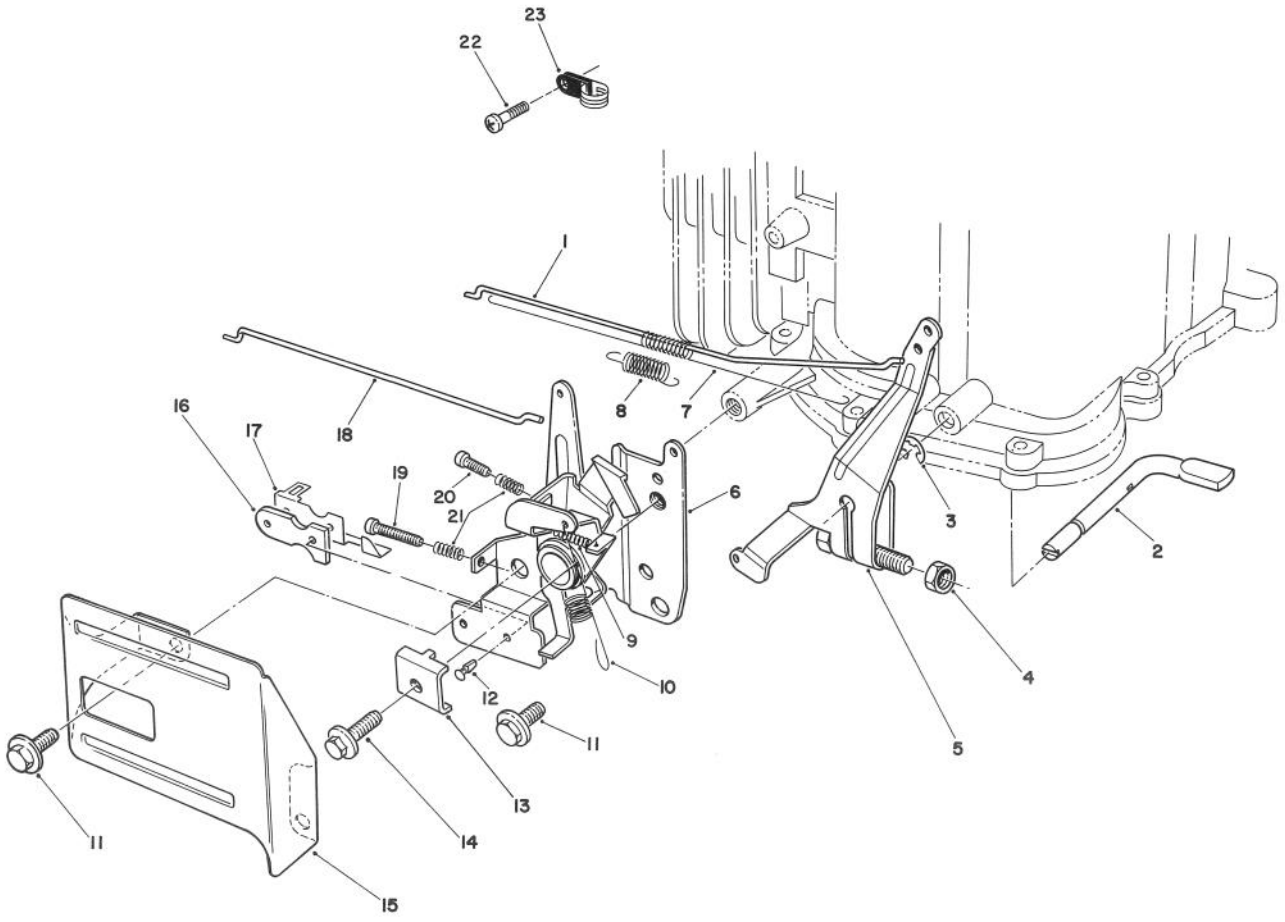

C–0159

GOVERNOR ASSEMBLY
(Engine No. VMM1–2)

Ref. No.	Part No.	Description	No. Used
1	81–4450	Rod – Carburetor	1
2	81–4480	Shaft – Governor	1
3	81–4540	E–Ring	1
4	81–4490	Nut	1
5	81–4500	Governor Arm Assembly	1
6	81–4510	Throttle & Choke Control	1
7	81–4470	Spring – Carburetor Rod	1
8	81–4460	Spring – Choke Lever	1
9	81–4570	Spring	1
10	81–4520	Spring – Governor	1
11	81–1170	Bolt	2
12	81–4530	Rivet	2

Ref. No.	Part No.	Description	No. Used
13	81–1690	Clamp – Cable	1
14	50–0130	Bolt	1
15	57–5750	Guard – Throttle	1
16	81–1830	Insulator – Kill Switch	1
17	81–1840	Terminal – Switch	1
18	81–4440	Rod – Choke	1
19	81–4560	Screw	1
20	81–4550	Screw	1
21	81–2900	Spring	2
22	81–0380	Screw	1
23	81–4780	Clamp	1

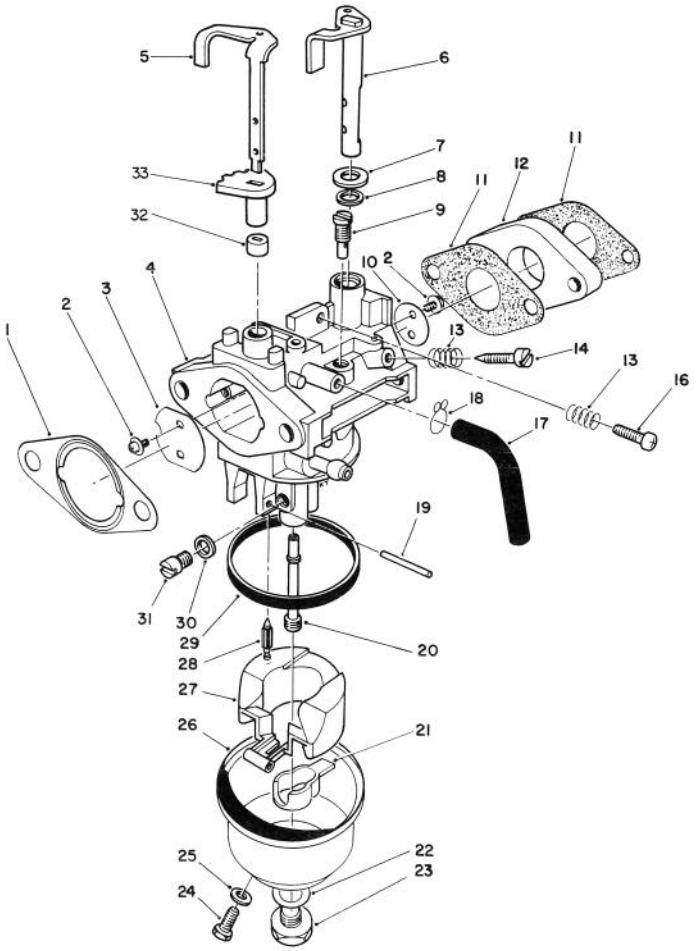

C–0160

CARBURETOR ASSEMBLY
(Engine No. VMM1–2)

Ref. No.	Part No.	Description	No. Used
1	81–4250	Gasket – Air Cleaner	1
2	81–2710	Screw – Choke Valve	4
3	81–2720	Valve – Choke	1
4		Body – Carburetor	1
5	81–5500	Shaft – Choke Control	1
6	81–2920	Shaft – Throttle Valve	1
7	81–4280	Washer	1
8	81–4290	Seal – Throttle Shaft	1
9	81–5620	Jet – Pilot (#38.8)	1
10	81–2940	Valve – Throttle	1
11	81–5560	Gasket – Carburetor	2
12	81–5570	Block – Insulator	1
13	81–2580	Spring – Pilot Screw	2
14	50–2360	Screw – Pilot	1
16	50–0250	Screw – Idle Stop	1
17	81–4310	Tube – Bowl Vent	1
18	81–4300	Clamp	1
19	81–5600	Pin – Hinge	1
20	81–5630	Nozzle – Main	1
21	81–4940	Spacer – Float	1

Ref. No.	Part No.	Description	No. Used
22	81–2650	Gasket – Bowl Screw	1
23	81–2660	Screw – Bowl	1
24	81–2670	Screw – Drain	1
25	81–2680	Gasket – Drain Screw	1
26	81–4340	Bowl – Float	1
27	81–4920	Float	1
28	81–4700	Needle	1
29	81–2630	Gasket – Float Bowl	1
30	81–4350	Spacer	1
31	81–5610	Jet – Main (#70)	1
*	81–5640	Jet – Main (#77.5 High Alt)	1
32	81–5530	Ring – Choke (Lower)	1
33	81–5520	Ring – Choke (Upper)	1
*	81–4270	Choke Shaft Assembly (Incl. Ref. #5, & 32–33)	1
*	81–5590	Carburetor Assembly (Incl. Ref. #2–33)	1
*	81–5820	Needle & Seat Kit (Incl. Valve Seat & Ref. #28)	1

*Not Illustrated

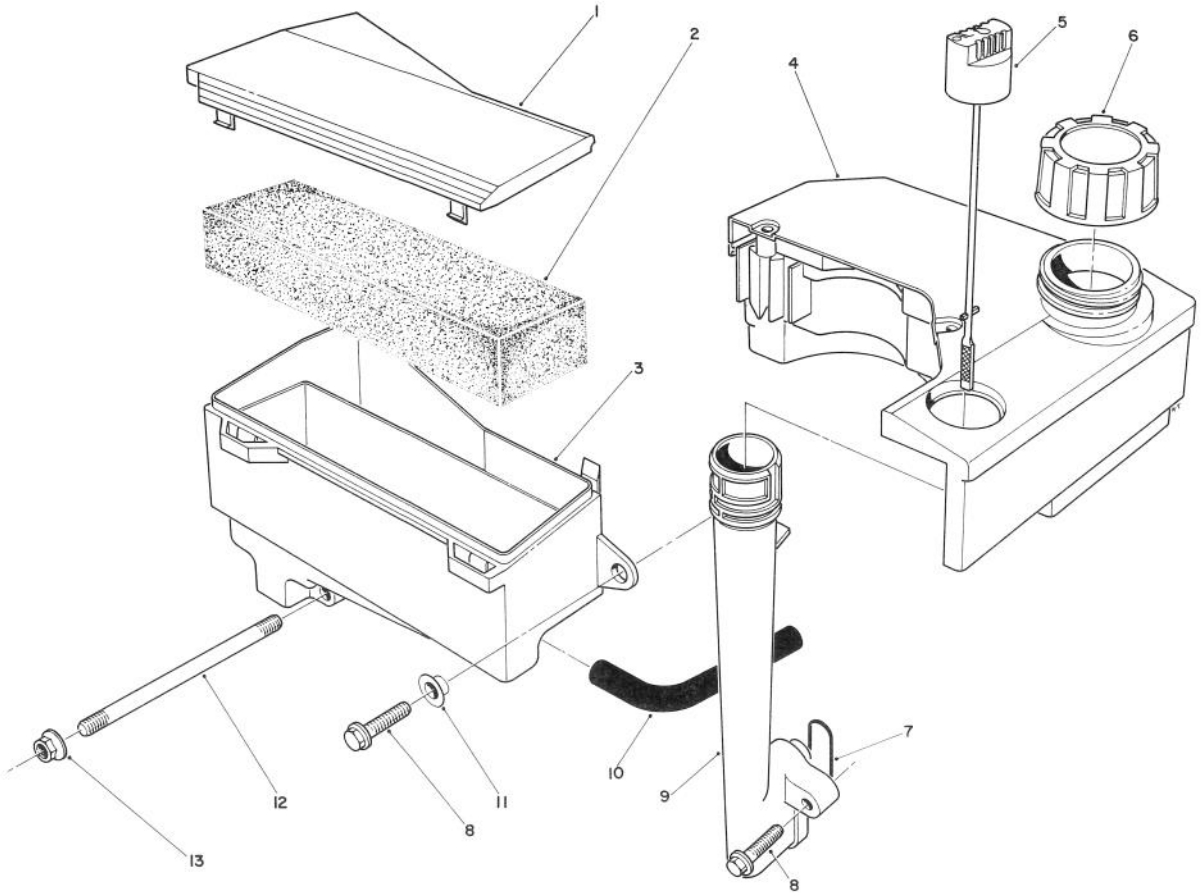

C–0161

AIR CLEANER & FUEL TANK ASSEMBLY (Engine No. VMM1–2)

Ref. No.	Part No.	Description	No. Used
1	81–4110	Cover – Air Cleaner	1
2	81–4120	Filter – Foam	1
3		Body – Air Cleaner	1
4	55–3530	Tank – Fuel	1
5	81–4140	Dipstick – Oil	1
6	55–3570	Cap – Gas	1
7	81–4150	Seal – Oil Tube	1
8	81–4160	Bolt	3

Ref. No.	Part No.	Description	No. Used
9	81–4170	Tube – Oil Fill	1
10	81–4180	Hose – Crankcase Breather	1
11	81–4200	Spacer	1
12	81–4220	Stud – Carburetor	2
13	50–7180	Nut	2
*	81–4240	Air Cleaner Assembly (Incl. Ref. #1 & 3)	1

*Not Illustrated

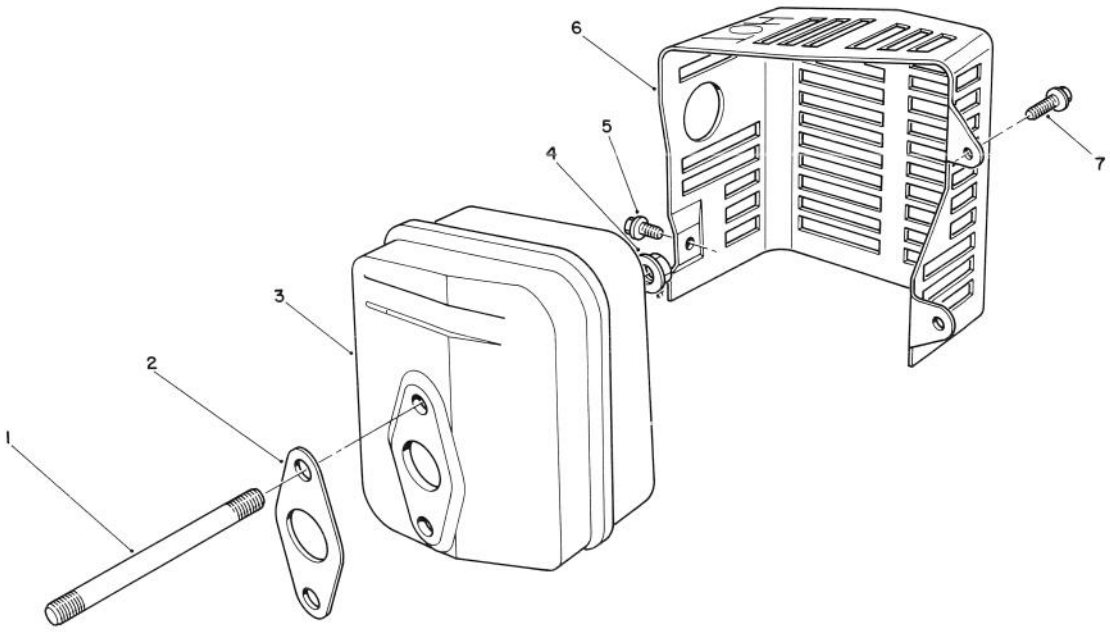

T–0726

MUFFLER ASSEMBLY
(Engine No. VMM1–2)

Ref. No.	Part No.	Description	No. Used
1	81–4380	Stud – Muffler	2
2	81–4390	Gasket – Muffler	1
3	81–4400	Muffler	1
4	50–0530	Nut	2
5	81–4420	Screw	1
6	81–4430	Cover – Muffler	1
7	81–1170	Bolt	2

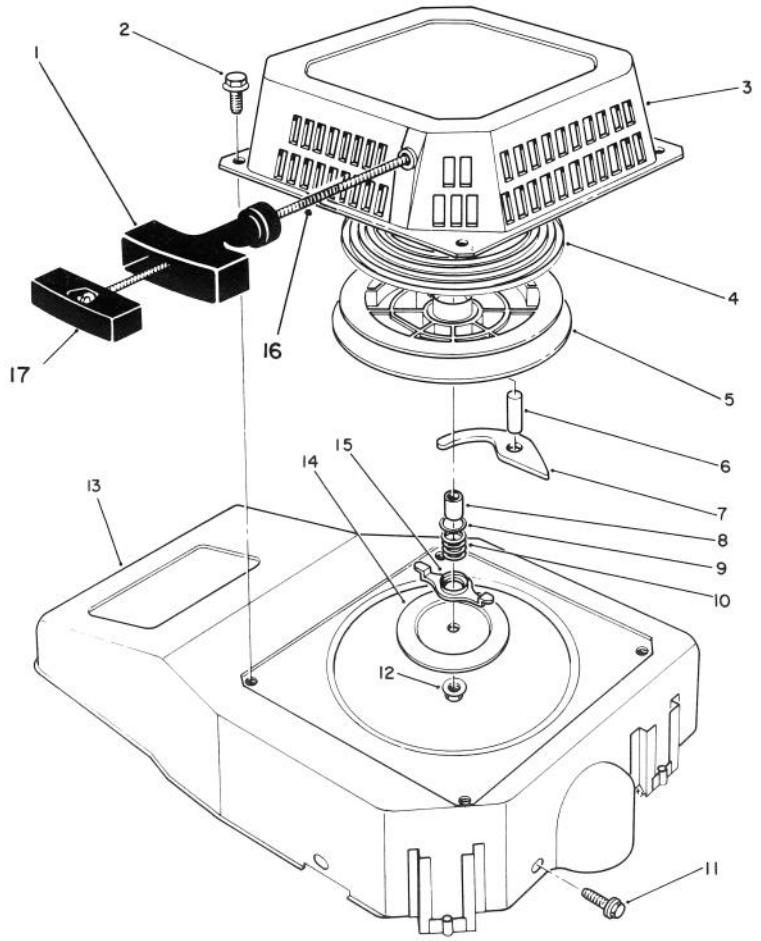

C–0162

RECOIL ASSEMBLY
(Engine No. VMM1–2)

Ref. No.	Part No.	Description	No. Used
1	81–4000	Handle	1
2	81–1280	Bolt	4
3	81–3970	Case – Recoil	1
4	81–4010	Spring – Recoil	1
5	81–4020	Reel – Rope Pulley	1
6	81–4030	Pin	1
7	81–4040	Pawl	1
8	81–4050	Spacer	1
9	81–4060	Washer	1
10	81–4070	Spring – Friction	1
11	81–1170	Bolt	3

Ref. No.	Part No.	Description	No. Used
12	81–4100	Nut – Lock	1
13	81–3960	Shroud – Blower	1
14	81–4090	Plate – Friction	1
15	81–4080	Guide – Pawl	1
16	81–1270	Rope – Recoil	1
17	81–4960	Retainer – Rope	1
*	81–3990	Rope & Handle Assembly (Incl. Ref. #1, 16 & 17)	1
*	81–3270	Recoil Starter Assembly (Incl. Ref. #1, 3–10, 12–15 & 17)	1

*Not Illustrated

TORO PART NUMBER INDEX

Part No.	Description	Pg. No.	Ref. No.	Qty.
5–2490	Screw – Shoulder	7	13	2
5–2490	Screw – Shoulder	1	25	2
13–5869	Housing – 53cm	1	6	1
13–5889	Door – Discharge	1	10	1
13–5929	Short Block Assembly	11	*	1
13–6019	Control Panel Assembly	7	4	1
14–9949	Wheel & Tire Assembly	2	30	2
14–9959	Wheel Tire & Gear Assy.	5	31	2
17–9426	Screw – Handle	8	7	2
25–7740	Knob – Arm	5	3	2
25–7740	Knob – Spring Arm	1	26	2
27–6231	Bolt – Wheel	2	32	2
27–6231	Bolt – Wheel	5	33	2
27–6250	Bushing – Wheel	2	31	4
27–6250	Bushing – Wheel	5	32	4
29–9570	Bushing – Yoke	5	38	1
36–4780	Washer – Thrust	6	44	1
36–4791	Washer – Thrust	6	48	2
38–7820	Bearing – Ball	6	60	1
40–1940	Washer – Wheel	2	33	4
42–3190	Bolt – Blade	4	8	2
46–5520	Lever – Traction	8	3	1
46–6432	Screw – Handle	8	2	1
46–8091	Screw – Handle	1	18	2
46–8290	Plate – TORO Logo	3	2	1
46–8800	Lever – Control	8	12	1
46–9620	Wrench – Spark Plug	3	*	1
46–9621	Pin – Spark Plug Wrench	3	*	1
47–2900	Bushing – Sleeve	5	19	2
48–2060	Bearing –Needle	5	21	2
49–2040	Screw – Self Tapping	5	8	8
49–2750	Pin – Handle	7	14	2
50–0130	Bolt	13	14	1
50–0190	Bolt	11	53	4
50–0250	Screw – Idle Stop	14	16	1
50–0450	Pin – Dowel	11	44	2
50–0510	Nut	11	32	2
50–0530	Nut	16	4	2
50–0960	Circlip	10	18	2
50–2360	Screw – Pilot	14	14	1
50–7180	Nut	15	13	2
51–3211	Line – Fuel	3	7	1
51–3214	Line – Fuel	3	9	1
52–7430	Control Bar Assembly	8	1	1
53–0860	Bolt	12	1	2
54–9190	Nut – flange Lock	4	13	2
55–3530	Tank – Fuel	15	4	1
55–3570	Cap – Gas	15	6	1
55–3760	Gear – Pinion 15T	6	49	1
55–3770	Gear – 49T (1st Gear)	6	58	1
55–3780	Gear – Pinion 20T	6	50	1
55–3790	Gear – 44T (2nd Gear)	6	57	1
55–3800	Gear – Pinion 25T	6	51	1
55–3810	Gear – 39T (3rd Gear)	6	56	1
56–6360	Filter – Fuel	3	8	1
56–6610	Screw – Thread Forming	3	4	2
57–3120	Decal – Recoil	3	3	1
57–3830	Spacer – Tubular	3	5	2
57–5750	Guard – Throttle	13	15	1
60–8710	Case – Gear (Upper)	6	61	1
60–8730	Cover – Gear Case	6	46	1
60–8750	Bushing – Intrmdt. Shaft	6	47	2
60–8770	Bushing – Output Shaft	6	45	1
60–8790	Sleeve – Gear	6	55	1
60–8800	Shaft – Intermediate	6	52	1
60–8810	Retainer – Shift Fork	6	39	1
60–8840	Pulley – Half	5	10	2
60–8850	Bushing – Output Shaft	6	53	1
60–8870	Yoke – Shift	5	37	1
60–8890	Pinion – Bevel	6	59	1
62–3860	Decal – Danger	1	5	1
62–3950	Decal – Step Pad	1	21	1
62–4280	Retainer – Blade	4	9	1
62–5920	Hub – Adapter	4	7	1
62–6660	Spacer	5	9	1
62–6673	Gear Case Assy. Complete	6	*	1
62–6770	Wrench	3	*	1
62–7560	Pulley – Engine	4	11	1
62–7700	Blade – 21	4	6	1
65–2720	Ring – Retaining	5	24	4
65–4710	Ring – Friction	5	25	2
65–4720	Spring – Compression	5	29	2
65–4730	Washer – Thrust (Inner)	5	22	2
65–4740	Washer – Thrust (Keyed)	5	23	4
65–4750	Pinion	5	28	2
65–4760	Washer –Clutch	5	26	2
65–4770	Shaft – Output	5	17	1
65–5010	Ramp – Discharge	2	38	1
65–5042	Pivot Arm Assembly	5	2	2
65–5100	Handle – Door	1	14	1
65–5140	Clamp – Hinge	1	12	2
65–5150	Cover – Access	1	20	1
65–5160	Seal – Door	1	7	1
65–5190	Bracket – Belt Guide	5	7	1
65–5200	Cover	4	10	1
65–5210	Screw – Hex. Socket Hd.	1	13	2
65–5220	Screw – Cap Socket Hd.	2	35	2
65–5220	Screw – Cap Socket Hd.	5	36	2
65–5221	Screw – Bracket	2	37	1
65–5250	Clip – Spring	6	43	1
65–5290	Pin – Hinge	1	16	2
65–5350	Shield – Trailing	1	22	1
65–5360	Spring – Extension	1	4	1
65–5370	Cable – Door	1	8	1
65–5440	Spring Arm Assembly	5	4	2
65–5460	Bushing – Door	1	15	2
65–5480	Seal – Door Side	1	9	2
65–5490	Seal – Door (End)	1	19	1
65–5660	Panel – Screen	1	2	1
65–5730	Latch – Handle	7	8	2
66–0010	Bag	9	2	1
66–0020	Panel – Vertical	1	1	1
66–0030	Bracket – Cable Support	4	1	1
66–0210	V–Belt	5	13	1
66–0236	Control – Throttle	7	3	1
66–0290	Decal – Instruction	7	5	1
66–0330	Support – Spacer	8	6	2
66–0360	Cap – End	5	5	2
66–0450	Screw – Shoulder Stud	7	11	2
66–0540	Arm – Front Spring	1	27	2
66–0560	Screw – Shoulder	2	29	2
66–0570	Guide – Belt	3	11	1
66–0580	Arm – Front Pivot	1	28	2
66–0610	Brace – Door	1	17	1
66–0620	Retainer – Belt	4	3	1
66–0640	Bracket – Discharge	2	36	1
66–0680	Decal – French Regulations	4	*	1
66–1770	Decal – TORO	7	17	1
66–1790	Decal – Danger	7	2	1
66–1970	Wrench – Oil Drain	3	*	1
66–1971	Pin – Oil Drain Wrench	3	*	1
66–6040	Key – Rocking (R.H.)	5	*	1
66–6050	Key – Rocking (L.H.)	5	27	1
71–0620	Cable – Traction	8	4	1
71–0960	Support – Cable	8	10	1
71–8370	Decal – Danger	1	11	1
71–9870	Decal – 53cm	2	39	1
72–4141	Engine – OHV	3	1	1
74–1660	Cover – Wheel	5	30	2
74–1671	Spacer – Wheel Cover	5	34	2
75–9850	Tube – Oil Drain	3	*	1
76–0760	Key – Shift	6	41	2
76–0770	Collar – Shift	6	42	1
76–0780	Sleeve – Shift Key	6	40	1

*Not Illustrated

TORO PART NUMBER INDEX (Cont.)

Part No.	Description	Pg. No.	Ref. No.	Qty.
76–0920	Lever – Shift	5	16	1
76–1790	Frame – Grass Bag	9	1	1
76–1980	Hanger – Shield	1	24	2
76–2710	Control – Ground Speed	7	1	1
76–2930	Retainer – Cable	5	15	1
80–2770	Cup – Anti Scalp	4	12	1
81–0380	Screw	13	22	1
81–1170	Bolt	10	1	9
81–1170	Bolt	16	7	2
81–1170	Bolt	13	11	2
81–1170	Bolt	17	11	3
81–1270	Rope – Recoil	17	16	1
81–1280	Bolt	17	2	4
81–1300	Bolt	12	4	3
81–1480	Clamp	12	2	1
81–1690	Clamp – Cable	13	13	1
81–1830	Insulator – Kill Switch	13	16	1
81–1840	Terminal – Switch	13	17	1
81–2580	Spring – Pilot Screw	14	13	2
81–2630	Gasket – Float Bowl	14	29	1
81–2650	Gasket – Bowl Screw	14	22	1
81–2660	Screw – Bowl	14	23	1
81–2670	Screw – Drain	14	24	1
81–2680	Gasket – Drain Screw	14	25	1
81–2710	Screw – Choke Valve	14	2	4
81–2720	Valve – Choke	14	3	1
81–2900	Spring	13	21	2
81–2920	Shaft – Throttle Valve	14	6	1
81–2940	Valve – Throttle	14	10	1
81–3250	Plug – Spark	10	11	1
81–3270	Recoil Starter Assembly	17	*	1
81–3280	Block – Engine	10	22	1
81–3290	Seal – Upper Crankshaft	10	23	1
81–3300	Gasket – Breather	10	24	2
81–3320	Cover – Breather	10	28	1
81–3370	Reed Valve Assembly	10	*	1
81–3380	Bearing – Ball	10	30	1
81–3390	Connecting Rod Assembly	10	21	1
81–3400	Plate – Lock	10	31	1
81–3430	Crankshaft	11	33	1
81–3440	Washer	11	34	1
81–3450	Bolt	11	35	7
81–3460	Seal – Lower Crankshaft	11	36	1
81–3470	Cover – Oil Pump	11	37	1
81–3480	Seal – O–Ring	11	38	1
81–3490	Oil Pump Assembly	11	39	1
81–3510	Gasket – Oil Plug	11	41	1
81–3520	Crankcase – Lower	11	42	1
81–3530	Gasket – Crankcase	11	43	1
81–3550	Governor Flyweight Assy.	11	45	1
81–3560	Plunger – Governor	11	47	1
81–3570	Washer	11	48	1
81–3580	Spring – Comp. Release	11	49	1
81–3600	Tappet	11	51	2
81–3610	Stud – Connecting Rod	11	46	2
81–3620	Piston	10	20	1
81–3630	Pin – Piston	10	19	1
81–3650	Piston Ring Set	10	17	1
81–3660	Valve – Exhaust	10	15	1
81–3670	Valve – Intake	10	16	1
81–3690	Pin – Dowel	10	13	2
81–3710	Guide – Push Rod	10	10	1
81–3720	Spring – Valve	10	9	2
81–3730	Retainer – Valve Spring	10	8	2
81–3740	Arm – Rocker	10	7	2
81–3750	Pivot – Rocker Arm	10	6	2
81–3760	Nut – Jam	10	5	2
81–3770	Gasket – Cover	10	4	1
81–3780	Cover – Rocker Arm	10	3	1
81–3790	Washer	10	2	4
81–3800	Stud – Rocker Arm	11	55	2
81–3810	Rod – Push	11	54	2
81–3820	Gasket Set	10	*	1
81–3830	Guide – Valve	11	52	2
81–3860	Cover – Spark Plug	12	9	1
81–3890	Nut	12	3	1
81–3910	Cup – Starter	12	5	1
81–3920	Flywheel	12	7	1
81–3930	Key – Flywheel	12	6	1
81–3960	Shroud – Blower	17	13	1
81–3970	Case – Recoil	17	3	1
81–3990	Rope & Handle Assembly	17	*	1
81–4000	Handle	17	1	1
81–4010	Spring – Recoil	17	4	1
81–4020	Reel – Rope Pulley	17	5	1
81–4030	Pin	17	6	1
81–4040	Pawl	17	7	1
81–4050	Spacer	17	8	1
81–4060	Washer	17	9	1
81–4070	Spring – Friction	17	10	1
81–4080	Guide – Pawl	17	15	1
81–4090	Plate – Friction	17	14	1
81–4100	Nut – Lock	17	12	1
81–4110	Cover – Air Cleaner	15	1	1
81–4120	Filter – Foam	15	2	1
81–4140	Dipstick – Oil	15	5	1
81–4150	Seal – Oil Tube	15	7	1
81–4160	Bolt	15	8	3
81–4170	Tube – Oil Fill	15	9	1
81–4180	Hose – Crankcase Breather	15	10	1
81–4200	Spacer	15	11	1
81–4220	Stud – Carburetor	15	12	2
81–4240	Air Cleaner Assembly	15	*	1
81–4250	Gasket – Air Cleaner	14	1	1
81–4270	Choke Shaft Assembly	14	*	1
81–4280	Washer	14	7	1
81–4290	Seal – Throttle Shaft	14	8	1
81–4300	Clamp	14	18	1
81–4310	Tube – Bowl Vent	14	17	1
81–4340	Bowl – Float	14	26	1
81–4350	Spacer	14	30	1
81–4380	Stud – Muffler	16	1	2
81–4390	Gasket – Muffler	16	2	1
81–4400	Muffler	16	3	1
81–4420	Screw	16	5	1
81–4430	Cover – Muffler	16	6	1
81–4440	Rod – Choke	13	18	1
81–4450	Rod – Carburetor	13	1	1
81–4460	Spring – Choke Lever	13	8	1
81–4470	Spring – Carburetor Rod	13	7	1
81–4480	Shaft – Governor	13	2	1
81–4490	Nut	13	4	1
81–4500	Governor Arm Assembly	13	5	1
81–4510	Throttle & Choke Control	13	6	1
81–4520	Spring – Governor	13	10	1
81–4530	Rivet	13	12	2
81–4540	E–Ring	13	3	1
81–4550	Screw	13	20	1
81–4560	Screw	13	19	1
81–4570	Spring	13	9	1
81–4700	Needle	14	28	1
81–4710	Gasket – Cylinder Head	10	14	1
81–4780	Clamp	13	23	1
81–4920	Float	14	27	1
81–4940	Spacer – Float	14	21	1
81–4960	Retainer – Rope	17	17	1
81–4970	Plug – Oil Drain	11	40	1
81–5500	Shaft – Choke Control	14	5	1
81–5520	Ring – Choke (Upper)	14	33	1
81–5530	Ring – Choke (Lower)	14	32	1
81–5540	Head – Cylinder	10	12	1
81–5550	Camshaft Assembly	11	50	1
81–5560	Gasket – Carburetor	14	11	2
81–5570	Block – Insulator	14	12	1

*Not Illustrated

Litho in U.S.A.

AL-931988

TORO PART NUMBER INDEX (Cont.)

Part No.	Description	Pg. No.	Ref. No.	Qty.
81–5580	Magneto Coil Assembly	12	8	1
81–5590	Carburetor Assembly	14	*	1
81–5600	Pin – Hinge	14	19	1
81–5610	Jet – Main (#70)	14	31	1
81–5620	Jet – Pilot (#38.8)	14	9	1
81–5630	Nozzle – Main	14	20	1
81–5640	Jet – Main (#77.5 High Alt)	14	*	1
81–5730	Cylinder Head Assembly	10	*	1
81–5820	Needle & Seat Kit	14	*	1
84–8331	Handle	7	6	1
237–153	Seal – O–Ring	5	18	2
2412–95	Clamp – Fuel Line	3	6	4
256–313	Washer – Nylon	7	12	2
302–56	Fitting – Grease	5	20	2
321–3	Screw – Cap Hex. Hd.	8	11	1
3256–22	Washer – Flat	8	9	1
3256–23	Washer – Flat	7	10	2
3256–23	Washer – Flat	1	23	2
3256–24	Washer – Flat	4	4	1
3256–24	Washer – Flat	5	12	1
3257–3	Key – Woodruff	4	15	1
3272–5	Pin – Cotter	5	14	1
3290–378	Tie – Cable	7	16	4
3296–5	Nut – Lock	5	11	1
3296–6	Nut – Lock	2	34	4
3296–6	Nut – Lock	5	35	2
3296–29	Nut – Lock	7	9	4
3296–33	Nut – Lock	4	14	1
3296–42	Nut – Lock	8	8	2
3296–47	Nut – Lock	7	15	2
3296–58	Nut – Lock	8	5	2
32104–76	Screw – Self Tapping	7	7	5
32121–120	Pin – Coil	6	54	1
32144–15	Screw – Hex. Flange Hd.	4	5	1
32144–70	Screw – Cap Hex. Hd.	4	2	5
32144–70	Screw – Cap Hex. Hd.	1	3	3
32144–70	Screw – Cap Hex. Hd.	3	12	2
32144–70	Screw – Hex. Washer Hd.	5	1	3
32144–102	Screw – Cap Hex. Hd.	3	10	3

OPTIONAL EQUIPMENT

Side Discharge Chute Kit ..... Model No. 59112
Dethatcher Kit ..... Model No. 59131
Leaf Shredder Kit ..... Model No. 59180
Spark Arrestor Kit ..... Part No. 56–6730

*Not Illustrated