FORM NO. 3316–182

TORO®

MODEL NO. 26625B–3900001 & UP

PARTS CATALOG

53cm KEY–LECTRIC®
Rear Bagging Mower

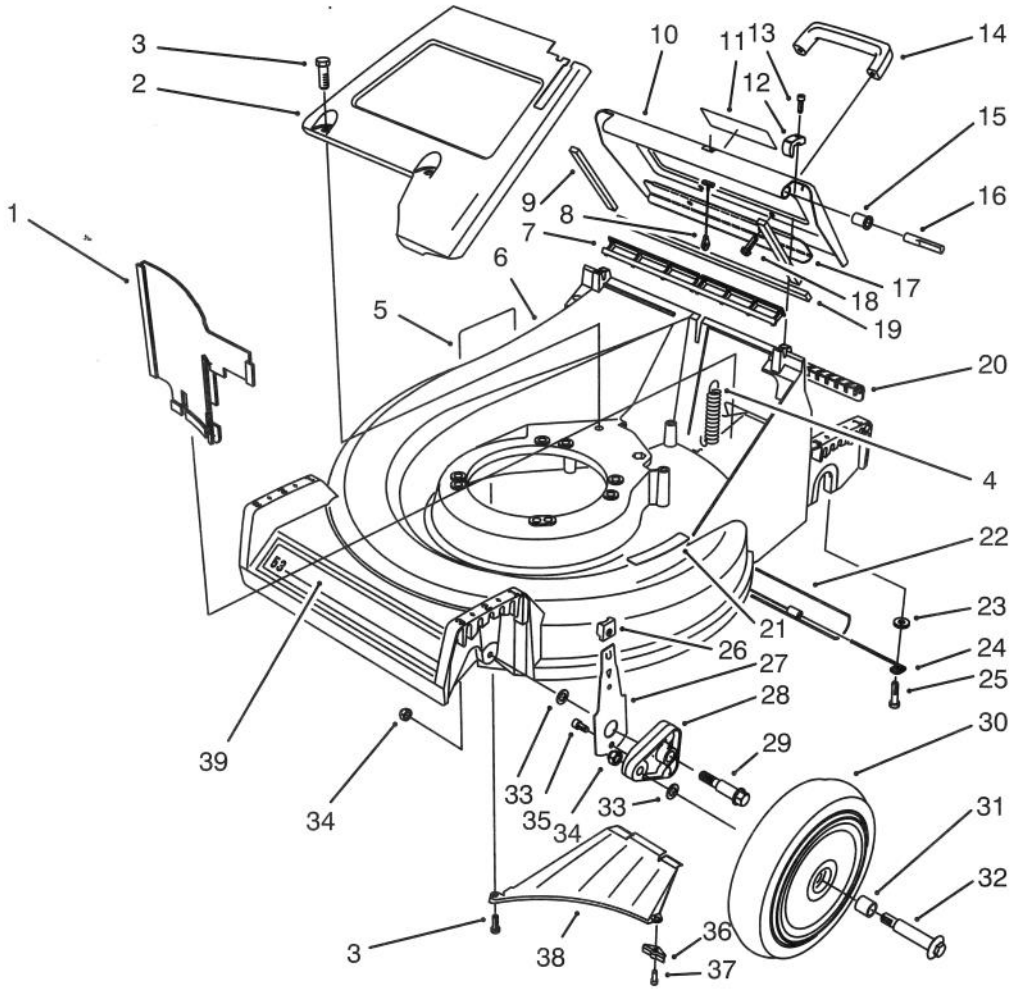

C–1556

HOUSING ASSEMBLY

Ref. No.	Part No.	Description	No. Used
1	66–0020	Panel – Vertical	1
2	65–5660	Panel – Screen	1
3	32144–70	Screw – Hex. Hd.	3
4	65–5360	Spring – Extension	1
5	62–3860	Decal – Danger	1
6	13–5869	Housing – 53cm (Incl. Ref. #5, & 21)	1
7	65–5160	Seal – Door	1
8	65–5370	Cable – Door	1
9	65–5480	Seal – Door Side	2
10	13–5889	Door – Discharge (Incl. Ref. #9, 11, 17, & 19)	1
11	71–8370	Decal – Danger	1
12	65–5140	Clamp – Hinge	2

Ref. No.	Part No.	Description	No. Used
13	65–5210	Screw – Hex. Socket Hd.	2
14	65–5100	Handle – Door	1
15	65–5460	Bushing – Door	2
16	65–5290	Pin – Hinge	2
17	66–0610	Brace – Door	1
18	46–8091	Screw – Handle	2
19	65–5490	Seal – Door (End)	1
20	65–5150	Cover – Access	1
21	62–3950	Decal – Step Pad	1
22	65–5350	Shield – Trailing	1
23	3256–23	Washer – Flat	2
24	76–1980	Hanger – Shield	2
25	5–2490	Screw – Shoulder	2
26	25–7740	Knob – Spring Arm	2

© The TORO Company –1993
All Rights Reserved

TPS

3316–182

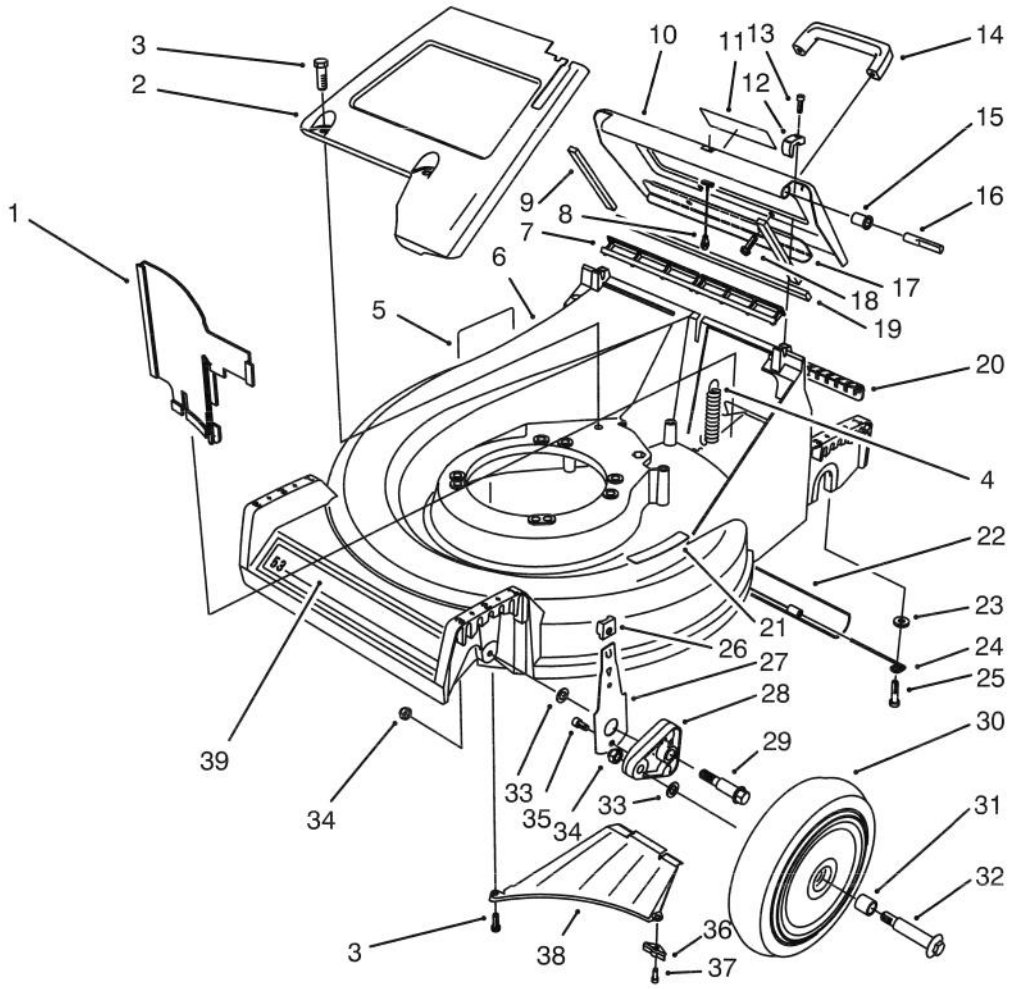

C–1556

HOUSING ASSEMBLY (Continued)

Ref. No.	Part No.	Description	No. Used
27	66–0540	Arm – Front Spring	2
28	66–0580	Arm – Front Pivot	2
29	66–0560	Screw – Shoulder	2
30	14–9949	Wheel & Tire Assembly (Incl. Ref. #31)	2
31	27–6250	Bushing – Wheel	4
32	27–6231	Bolt – Wheel	2
33	40–1940	Washer – Wheel	4

Ref. No.	Part No.	Description	No. Used
34	3296–6	Nut – Lock	4
35	65–5220	Screw – Socket Hd. Cap	2
36	66–0640	Bracket – Discharge	1
37	65–5221	Screw – Bracket	1
38	65–5010	Ramp – Discharge	1
39	71–9870	Decal – 53cm	1
*	66–0680	Decal – French Regulations	1

*Not Illustrated

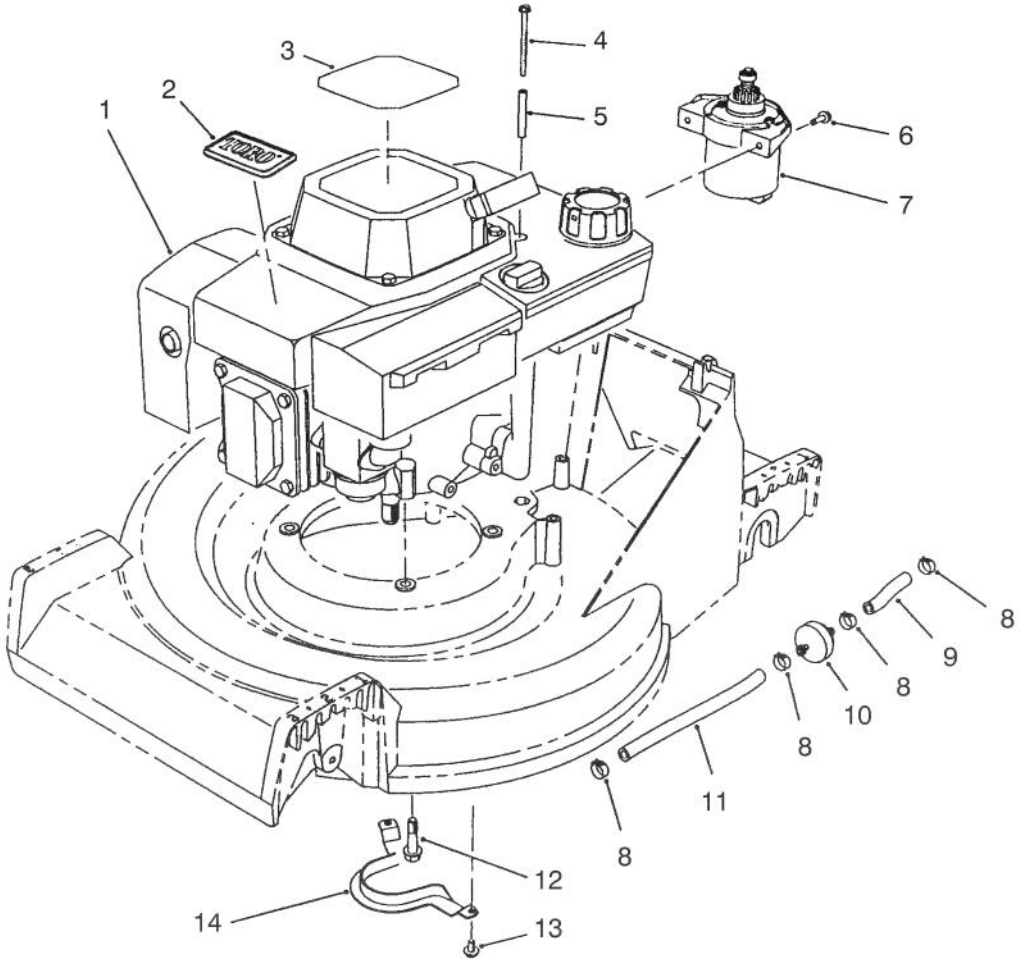

C–0165a

ENGINE ASSEMBLY

Ref. No.	Part No.	Description	No. Used
1	72–4142	Engine – OHV	1
2	46–8290	Plate – TORO Logo	1
3	57–3120	Decal – Recoil	1
4	56–6610	Screw – Thread Forming	2
5	57–3830	Spacer – Tubular	2
6	56–6380	Screw – Thread Forming	2
7	53–4500	Starter Motor Assembly	1
8	2412–95	Clamp – Fuel Line	4

Ref. No.	Part No.	Description	No. Used
9	51–3211	Line – Fuel	1
10	56–6360	Filter – Fuel	1
11	51–3214	Line – Fuel	1
12	32144–102	Screw – Hex. Hd. Cap	3
13	32144–70	Screw – Hex. Hd. Cap	2
14	66–0570	Guide – Belt	1
*	75–9850	Tube – Oil Drain	1

*Not Illustrated

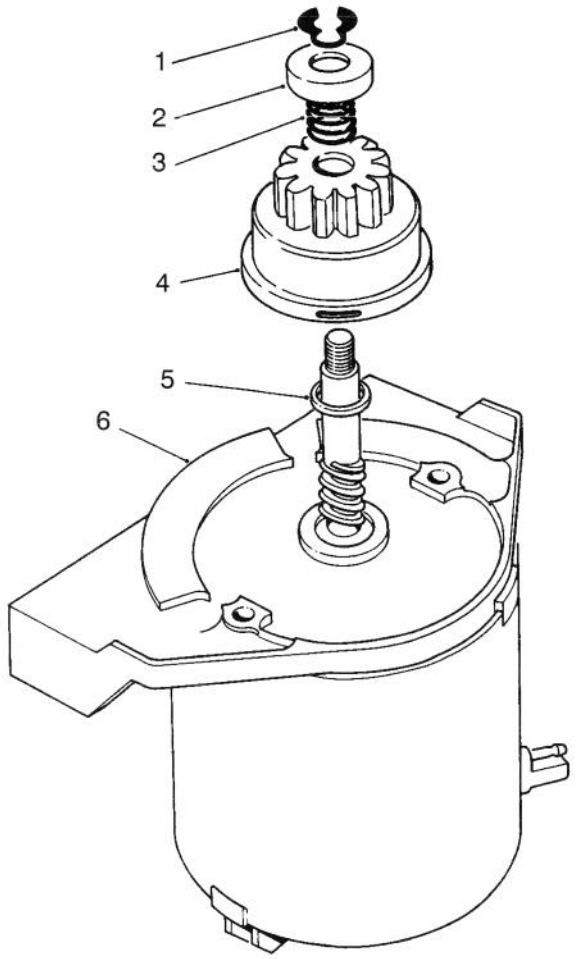

C–1558

STARTER MOTOR ASSEMBLY

Ref. No.	Part No.	Description	No. Used
1	32151–47	Ring – Retaining	1
2	49–2170	Stop – Pinion	1
3	44–0500	Spring – Compression	1
4	43–4370	Pinion Assembly	1
5	23–9591	Spacer	1
6	53–4460	Frame – End	1
*	53–4500	Starter Motor Assembly (Incl. Ref. #1–6)	1

*Not Illustrated

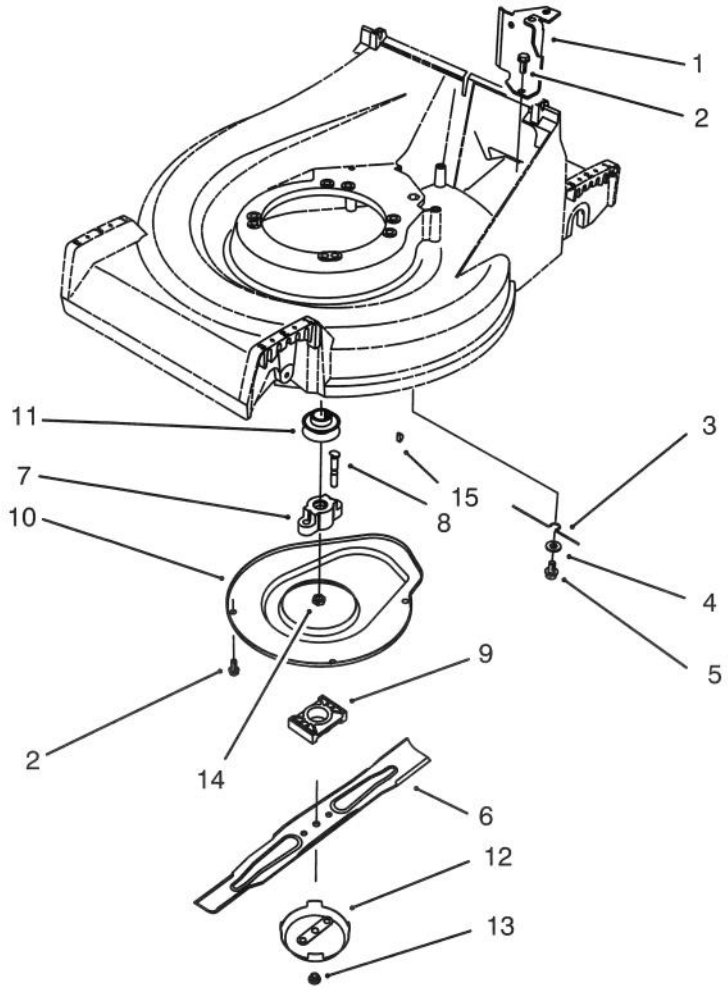

C–1557

BLADE ASSEMBLY

Ref. No.	Part No.	Description	No. Used
1	66–0030	Bracket – Cable Support	1
2	32144–70	Screw – Hex. Hd. Cap	5
3	66–0620	Retainer – Belt	1
4	3256–24	Washer – Flat	1
5	32144–15	Screw – Hex. Flange Hd.	1
6	62–7700	Blade – 21"	1
7	62–5920	Hub – Adapter	1
8	42–3190	Bolt – Blade	2

Ref. No.	Part No.	Description	No. Used
9	62–4280	Spacer – Blade	1
10	65–5200	Cover	1
11	62–7560	Pulley – Engine	1
12	80–2770	Cup – Anti Scalp	1
13	54–9190	Nut – Flange Lock	2
14	3296–33	Nut – Lock	1
15	3257–3	Key – Woodruff	1

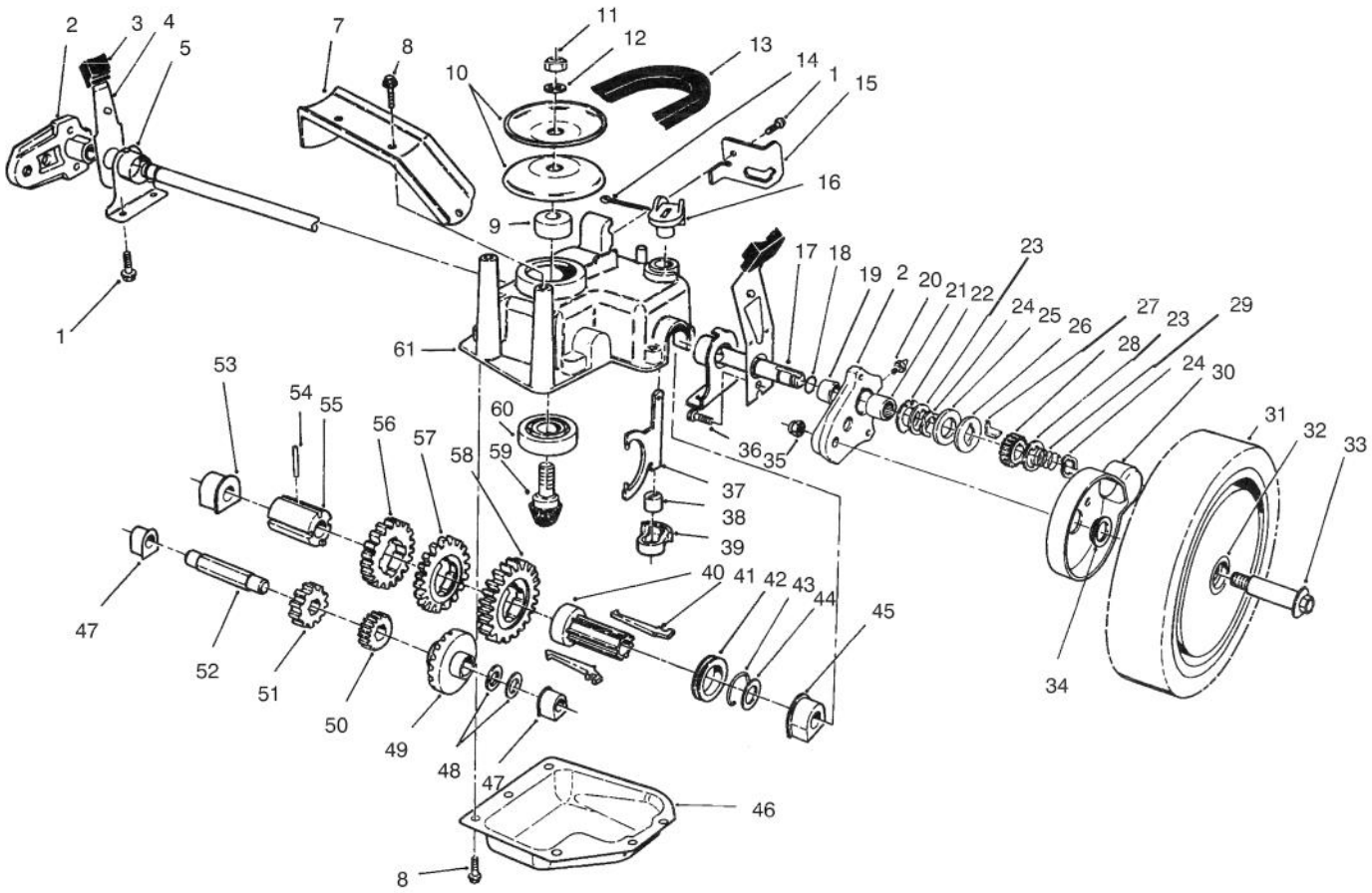

GEAR CASE ASSEMBLY

Ref. No.	Part No.	Description	No. Used
1	32144–70	Screw – Hex. Washer Hd.	3
2	65–5042	Pivot Arm Assembly (Incl. Ref. #19–21)	2
3	25–7740	Knob – Arm	2
4	65–5440	Spring Arm Assembly	2
5	66–0360	Cap – End	2
7	65–5190	Bracket – Belt Guide	1
8	49–2040	Screw – Self Tapping	8
9	62–6660	Spacer	1
10	60–8840	Pulley – Half	2
11	3296–5	Nut – Lock	1
12	3256–24	Washer – Flat	1
13	66–0210	V–Belt	1
14	3272–5	Pin – Cotter	1
15	76–2930	Retainer – Cable	1
16	76–0920	Lever – Shift	1
17	65–4770	Shaft – Output	1
18	237–153	Seal – "O"Ring	2
19	47–2900	Bushing – Sleeve	2
20	302–56	Fitting – Grease	2
21	48–2060	Bearing –Needle	2
22	65–4730	Washer – Thrust (Inner)	2
23	65–4740	Washer – Thrust (Keyed)	4

Ref. No.	Part No.	Description	No. Used
24	65–2720	Ring – Retaining	4
25	65–4710	Ring – Friction	2
26	65–4760	Washer –Clutch	2
27	66–6050	Key – Rocking (L.H.)	1
*	66–6040	Key – Rocking (R.H.)	1
28	65–4750	Pinion	2
29	65–4720	Spring – Compression	2
30	74–1660	Cover – Wheel	2
31	14–9959	Wheel Tire & Gear Assy. (Incl. Ref. #32)	2
32	27–6250	Bushing – Wheel	4
33	27–6231	Bolt – Wheel	2
34	74–1671	Spacer – Wheel Cover	2
35	3296–6	Nut – Lock	2
36	65–5220	Screw – Socket Hd. Cap	2
37	60–8870	Yoke – Shift	1
38	29–9570	Bushing – Yoke	1
39	60–8810	Retainer – Shift Fork	1
40	76–0780	Sleeve – Shift Key	1
41	76–0760	Key – Shift	2
42	76–0770	Collar – Shift	1
43	65–5250	Clip – Spring	1
44	36–4780	Washer – Thrust	1

*Not Illustrated

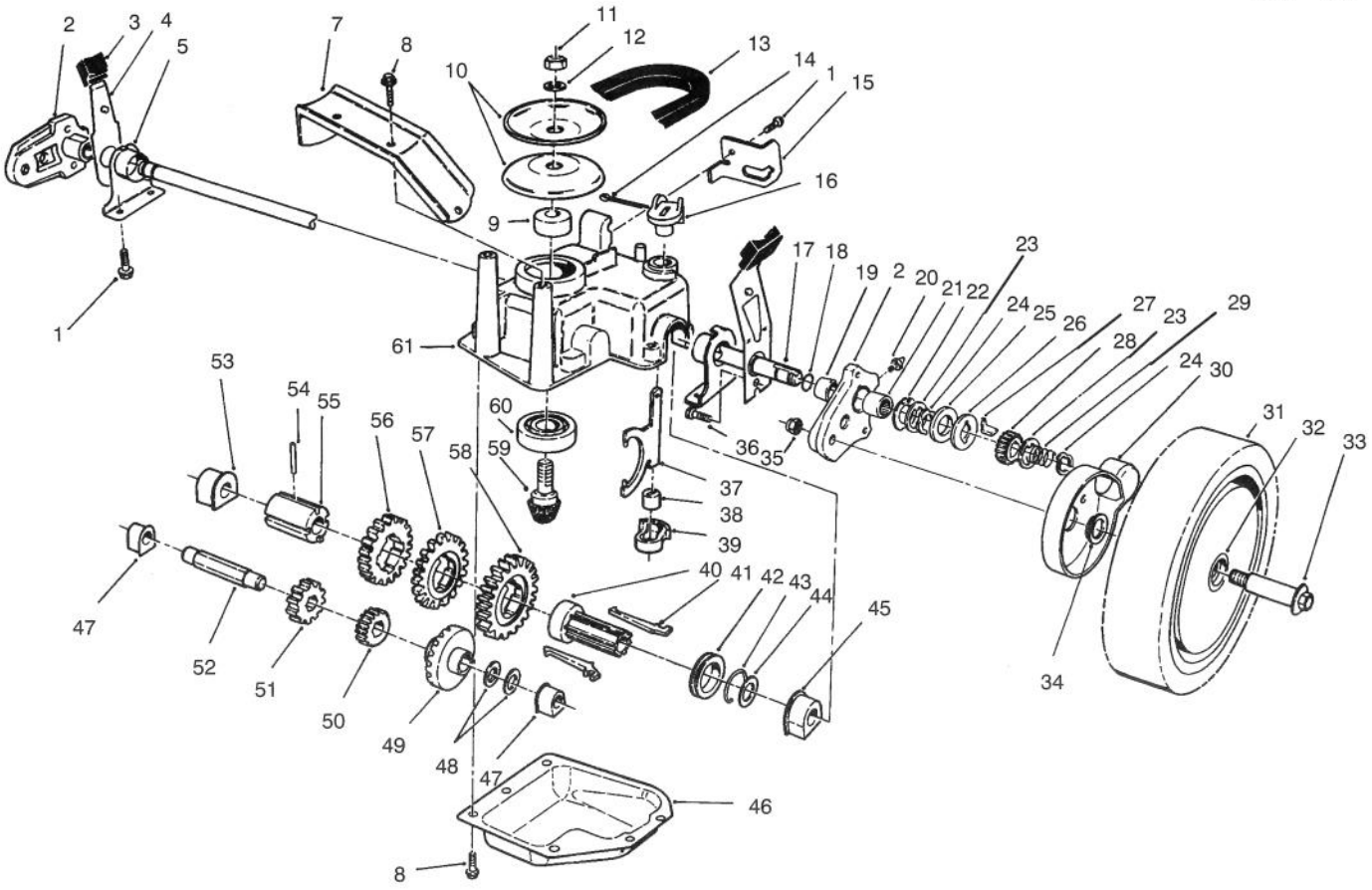

C–1555

GEAR CASE ASSEMBLY (Continued)

Ref. No.	Part No.	Description	No. Used
45	60–8770	Bushing – Output Shaft	1
46	60–8730	Cover – Gear Case	1
47	60–8750	Bushing – Intrmdt. Shaft	2
48	36–4791	Washer – Thrust	2
49	55–3760	Gear – Pinion 15T	1
50	55–3780	Gear – Pinion 20T	1
51	55–3800	Gear – Pinion 25T	1
52	60–8800	Shaft – Intermediate	1
53	60–8850	Bushing – Output Shaft	1

Ref. No.	Part No.	Description	No. Used
54	32121–120	Pin – Coil	1
55	60–8790	Sleeve – Gear	1
56	55–3810	Gear – 39T (3rd Gear)	1
57	55–3790	Gear – 44T (2nd Gear)	1
58	55–3770	Gear – 49T (1st Gear)	1
59	60–8890	Pinion – Bevel	1
60	38–7820	Bearing – Ball	1
61	60–8710	Case – Gear (Upper)	1
*	62–6673	Gear Case Assy. Complete	1

*Not Illustrated

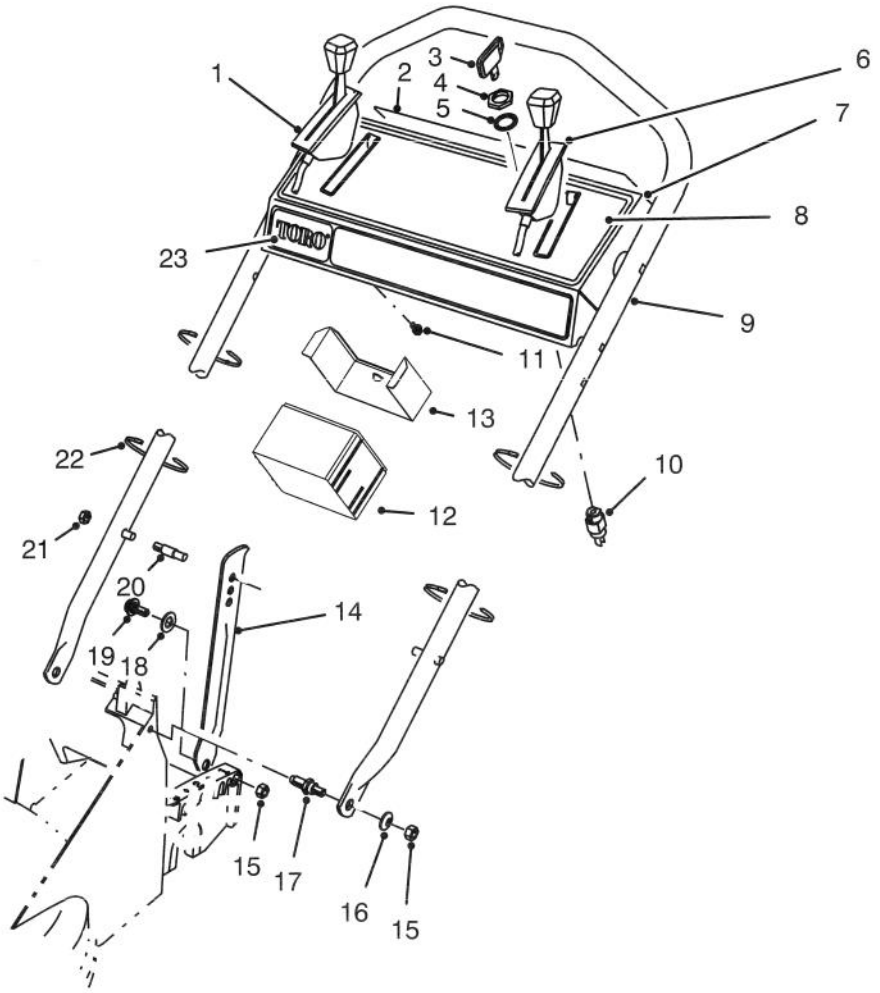

C–494a

HANDLE ASSEMBLY

Ref. No.	Part No.	Description	No. Used
1	76–2713	Control – Ground Speed	1
2	66–1790	Decal – Danger	1
*	72–8030	Decal – Danger	1
3	63–8360	Key – Ignition	1
4	218–461	Nut – Lock	1
5	3254–5	Washer – Lock	1
6	66–0236	Control – Throttle Bend Type #2 Sheath Lg. 44–3/4" (113.7cm) Wire Lg. 2–1/2" (6.4cm)	1
7	13–5859	Panel – Control (Incl. Ref. #2, & 8)	1
8	66–0280	Decal – Instruction	1
9	84–8331	Handle	1
10	46–5780	Switch – Starter (Incl. Ref. #4 & 5)	1

Ref. No.	Part No.	Description	No. Used
11	32104–76	Screw – Self Tapping	5
12	55–7520	Battery	1
13	55–8180	Retainer – Battery	1
14	65–5730	Latch – Handle	2
15	3296–29	Nut – Lock	2
16	3256–23	Washer – Flat	2
17	66–0450	Screw – Shoulder Stud	2
18	256–313	Washer – Nylon	2
19	5–2490	Screw – Shoulder	2
†20	49–2750	Pin – Handle	2
†21	3296–47	Nut – Lock	2
22	3290–378	Tie – Cable	5
23	65–5650	Decal – TORO K.E.	1
*	49–8312	Harness – Wire	1
*	22–4710	Charger – Battery (220V)	1

*Not Illustrated
†Service Replacement Parts

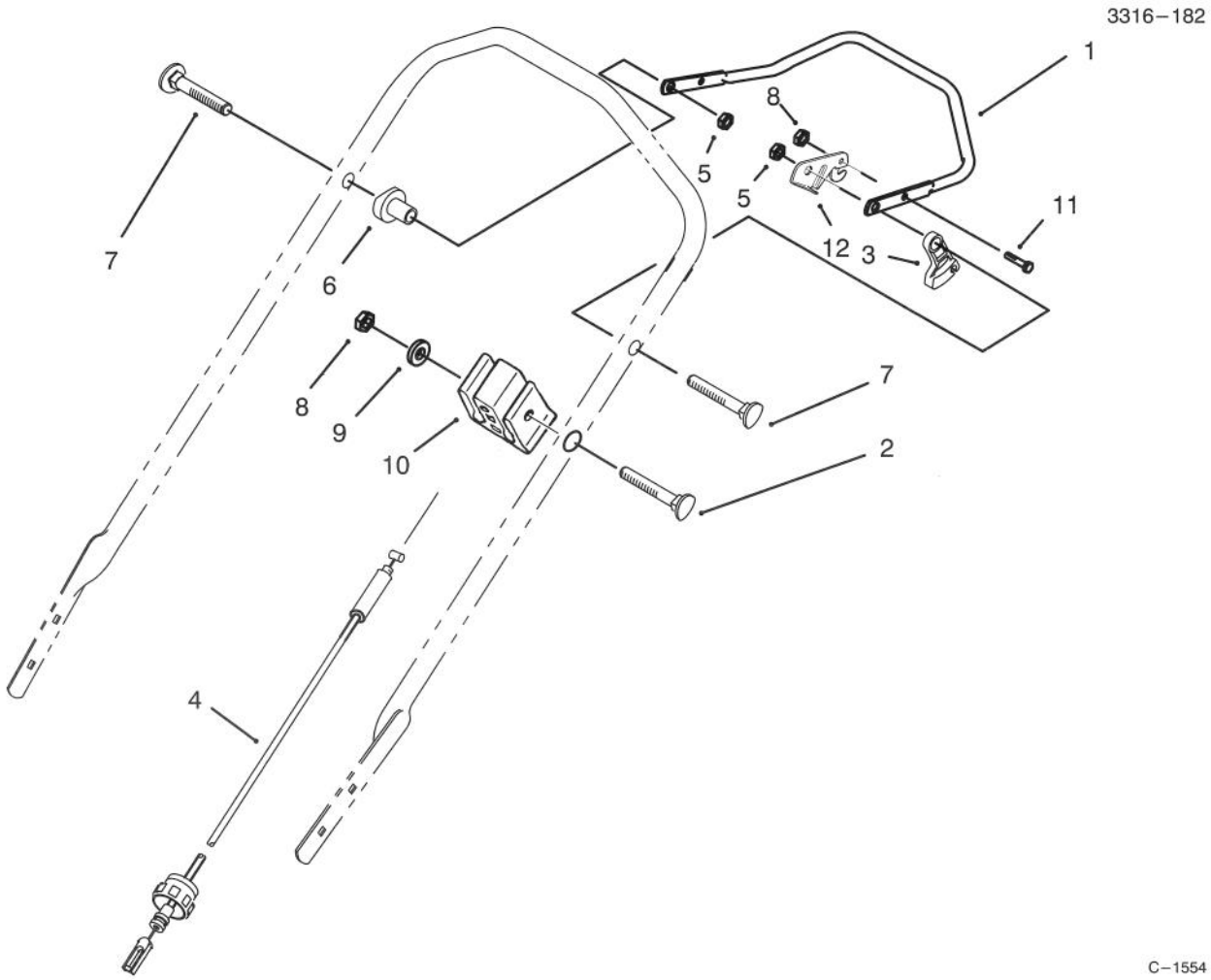

TRACTION CONTROL ASSEMBLY

Ref. No.	Part No.	Description	No. Used
1	52–7430	Control Bar Assembly	1
2	46–6432	Screw – Handle	1
3	46–5520	Lever – Traction	1
4	71–0620	Cable – Traction	1
5	3296–58	Nut – Lock	2
6	66–0330	Support – Spacer	2

Ref. No.	Part No.	Description	No. Used
7	17–9426	Screw – Handle	2
8	3296–42	Nut – Lock	2
9	3256–22	Washer – Flat	1
10	71–0960	Support – Cable	1
11	321–3	Screw – Hex. Hd. Cap	1
12	46–8800	Lever – Control	1

3316–182

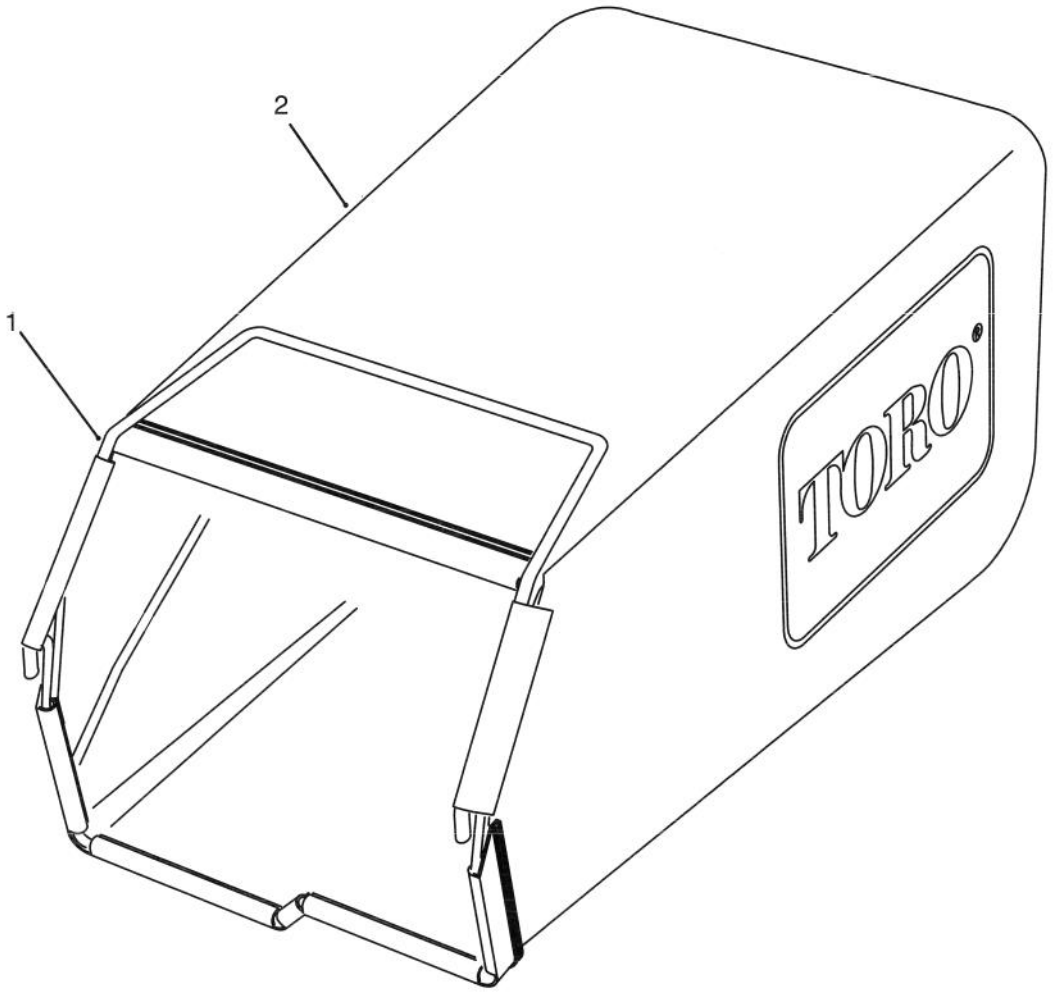

C–0819

GRASS BAG ASSEMBLY

Ref. No.	Part No.	Description	No. Used
1	76–1790	Frame – Grass Bag	1

Ref. No.	Part No.	Description	No. Used
2	66–0010	Bag	1

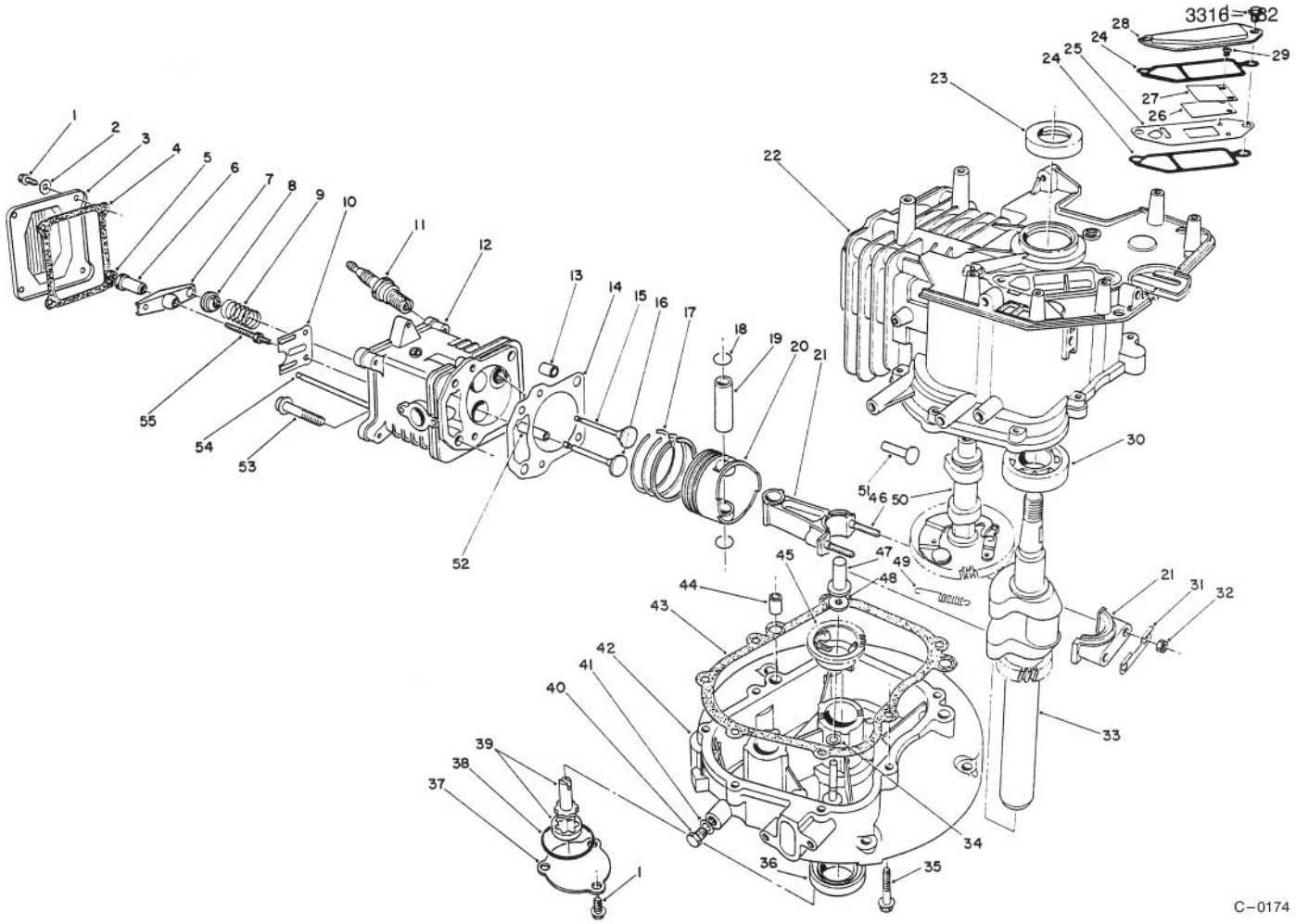

CRANKCASE ASSEMBLY
(Engine No. VMM1-3)

Ref. No.	Part No.	Description	No. Used
1	81-1170	Bolt	9
2	81-3790	Washer	4
3	81-3780	Cover – Rocker Arm	1
4	81-3770	Gasket – Cover	1
5	81-3760	Nut – Jam	2
6	81-3750	Pivot – Rocker Arm	2
7	81-3740	Arm – Rocker	2
8	81-3730	Retainer – Valve Spring	2
9	81-3720	Spring – Valve	2
10	81-3710	Guide – Push Rod	1
11	81-3250	Plug – Spark	1
12	81-5540	Head – Cylinder (Incl. Ref. #52)	1
13	81-3690	Pin – Dowel	2
14	81-4710	Gasket – Cylinder Head	1
*	81-3820	Gasket Set	1
15	81-3660	Valve – Exhaust	1
16	81-3670	Valve – Intake	1
17	81-3650	Ring Set, Piston	1
18	50-0960	Circlip	2
19	81-3630	Pin – Piston	1
20	81-3620	Piston	1

Ref. No.	Part No.	Description	No. Used
21	81-3390	Connecting Rod Assembly (Incl. Ref. #31, 32 & 46)	1
22	81-3280	Block – Engine (Incl. Ref. #23 & 30)	1
23	81-3290	Seal – Upper Crankshaft	1
24	81-3300	Gasket – Breather	2
25		Plate – Breather	1
26		Valve – Reed	1
*	81-3370	Reed Valve Assembly (Incl. Ref. # 25 & 27-29)	1
27		Retainer – Reed Valve	1
28	81-3320	Cover – Breather	1
29		Screw – Reed Valve	2
30	81-3380	Bearing – Ball	1
31	81-3400	Plate – Lock	1
32	50-0510	Nut	2
33	81-3430	Crankshaft	1
34	81-3440	Washer	1
35	81-3450	Bolt	7
36	81-3460	Seal – Lower Crankshaft	1
37	81-3470	Cover – Oil Pump	1

*Not Illustrated

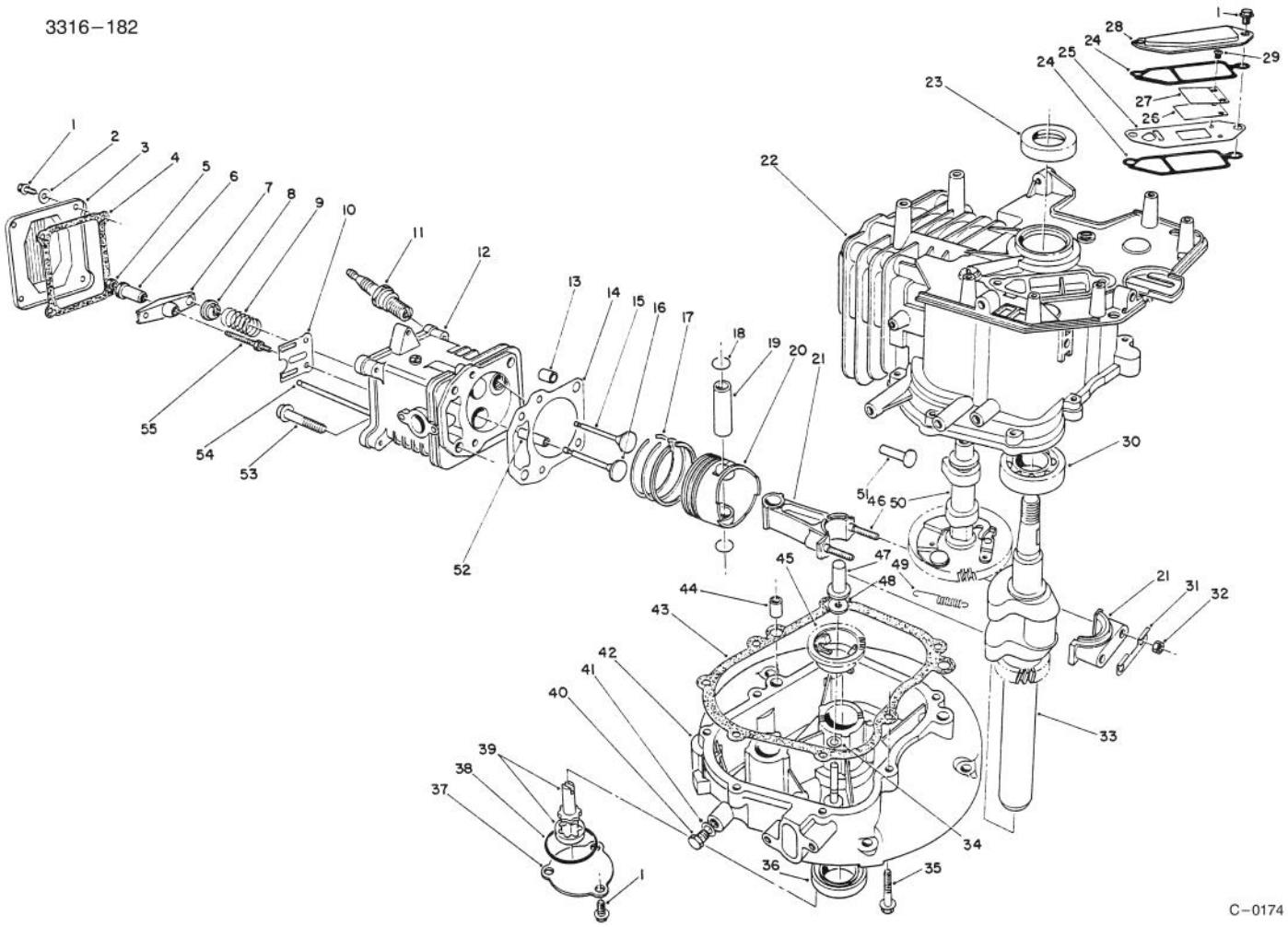

CRANKCASE ASSEMBLY (Continued)
(Engine No. VMM1-3)

Ref. No.	Part No.	Description	No. Used
38	81-3480	Seal - O-Ring	1
39	81-3490	Oil Pump Assembly	1
40	81-4970	Plug - Oil Drain	1
41	81-3510	Gasket - Oil Plug	1
42	81-3520	Crankcase - Lower	1
43	81-3530	Gasket - Crankcase	1
44	50-0450	Pin - Dowel	2
45	81-3550	Governor Flyweight Assy.	1
46	81-3610	Stud - Connecting Rod	2
47	81-3560	Plunger - Governor	1
48	81-3570	Washer	1
49	81-3580	Spring - Comp. Release	1

Ref. No.	Part No.	Description	No. Used
50	81-5550	Camshaft Assembly (Incl. Ref. #49)	1
51	81-3600	Tappet	2
52	81-3830	Guide - Valve	2
53	50-0190	Bolt	4
54	81-3810	Rod - Push	2
55	81-3800	Stud - Rocker Arm	2
*	81-5730	Cylinder Head Ass'y (Incl. Ref. #1-10, 12, & 52-55)	1
*	13-5939	Short Block Assembly	1

*Not Illustrated

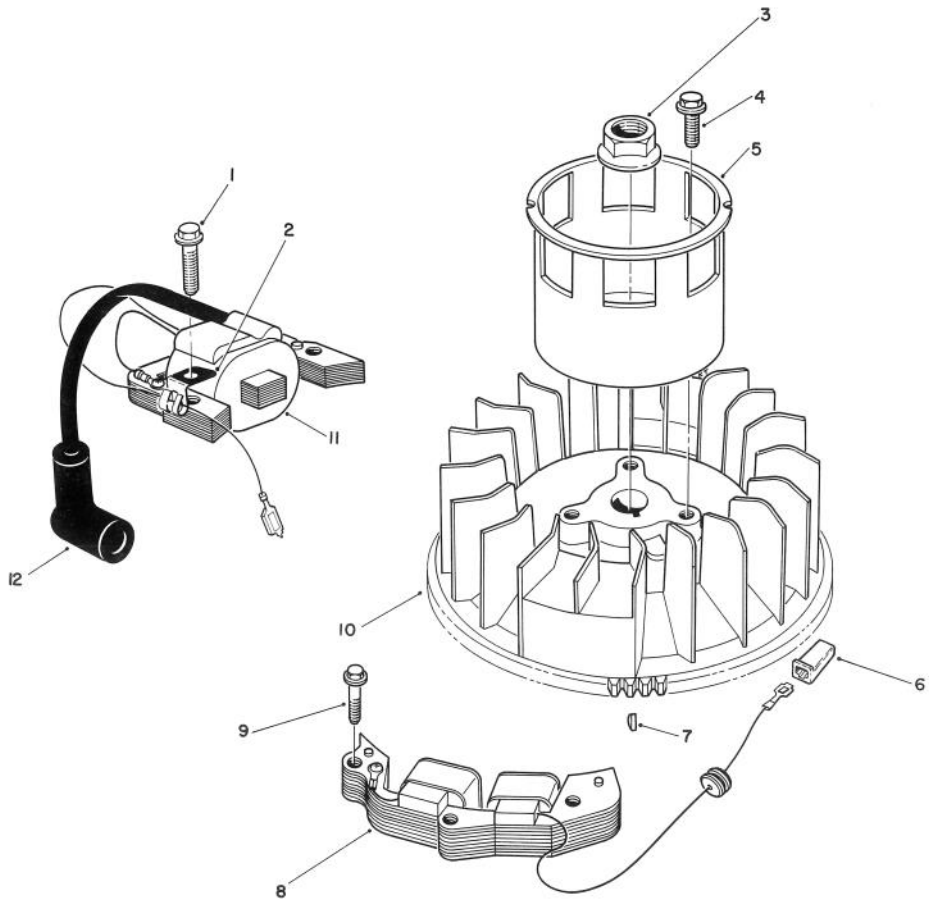

C–0158

MAGNETO & FLYWHEEL ASSEMBLY (Engine No. VMM1–3)

Ref. No.	Part No.	Description	No. Used
1	53–0860	Bolt	2
2	81–1480	Clamp	1
3	81–3890	Nut	1
4	81–1300	Bolt	3
5	81–3910	Cup – Starter	1
6	218–550	Connector – Wire	1

Ref. No.	Part No.	Description	No. Used
7	81–3930	Key – Flywheel	1
8	81–3940	Coil – Alternator	1
9	81–3950	Bolt	2
10	81–3920	Flywheel	1
11	81–5580	Magneto Coil Assembly	1
12	81–3860	Cover – Spark Plug	1

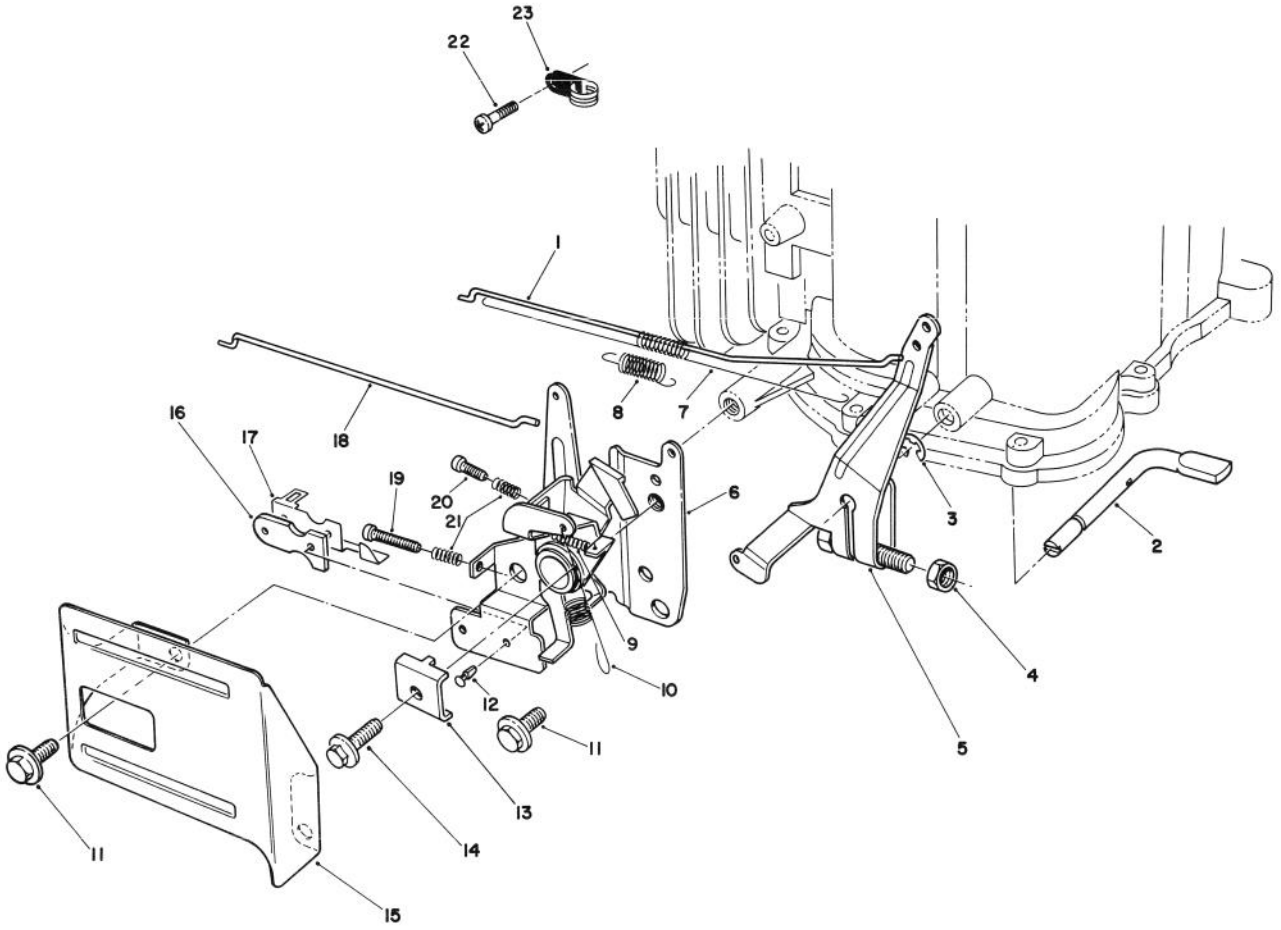

C–0159

GOVERNOR ASSEMBLY
(Engine No. VMM1–3)

Ref. No.	Part No.	Description	No. Used
1	81–4450	Rod – Carburetor	1
2	81–4480	Shaft – Governor	1
3	81–4540	Ring – Retaining	1
4	81–4490	Nut	1
5	81–4500	Governor Arm Assembly	1
6	81–4510	Throttle & Choke Control	1
7	81–4470	Spring – Carburetor Rod	1
8	81–4460	Spring – Choke Lever	1
9	81–4570	Spring	1
10	81–4520	Spring – Governor	1
11	81–1170	Bolt	2
12	81–4530	Rivet	2

Ref. No.	Part No.	Description	No. Used
13	81–1690	Clamp – Cable	1
14	50–0130	Bolt	1
15	57–5750	Guard – Throttle	1
16	81–1830	Insulator – Kill Switch	1
17	81–1840	Terminal – Switch	1
18	81–4440	Rod – Choke	1
19	81–4560	Screw	1
20	81–4550	Screw	1
21	81–2900	Spring	2
22	81–0380	Screw	1
23	81–4780	Clamp	1

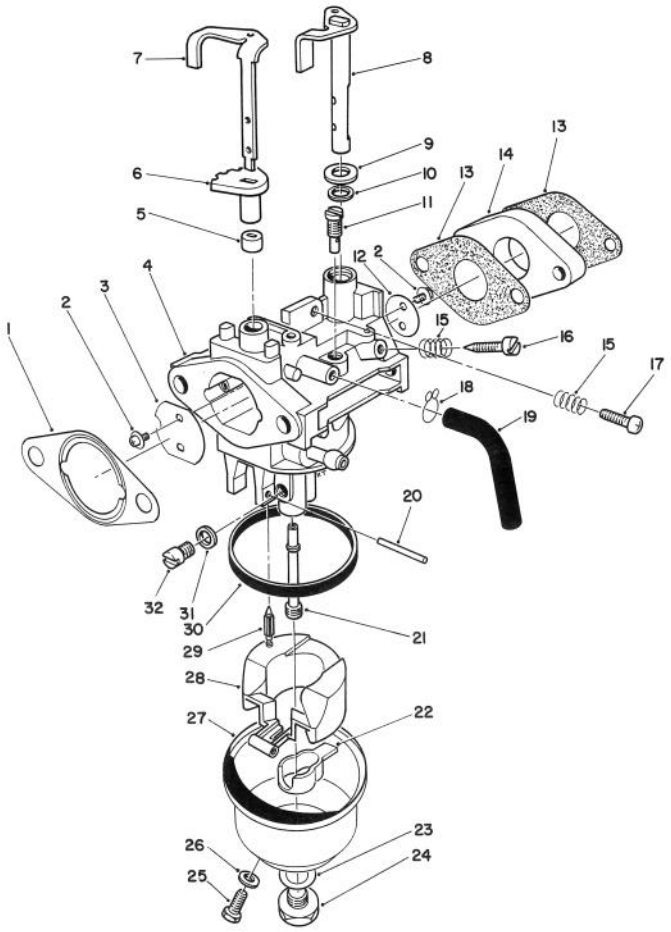

C–0160

CARBURETOR ASSEMBLY (Engine No. VMM1–3)

Ref. No.	Part No.	Description	No. Used
1	81–4250	Gasket – Air Cleaner	1
2	81–2710	Screw – Choke Valve	4
3	81–2720	Valve – Choke	1
4		Body – Carburetor	1
5	81–5530	Ring – Choke (Lower)	1
6	81–5520	Ring – Choke (Upper)	1
7	81–5500	Shaft – Choke Control	1
8	81–2920	Shaft – Throttle Valve	1
9	81–4280	Washer	1
10	81–4290	Seal – Throttle Shaft	1
11	81–5620	Jet – Pilot (#38.8)	1
12	81–2940	Valve – Throttle	1
13	81–5560	Gasket – Carburetor	2
14	81–5570	Block – Insulator	1
15	81–2580	Spring – Pilot Screw	2
16	50–2360	Screw – Pilot	1
17	50–0250	Screw – Idle Stop	1
18	81–4300	Clamp	1
19	81–4310	Tube – Bowl Vent	1
20	81–5600	Pin – Hinge	1

Ref. No.	Part No.	Description	No. Used
21	81–5630	Nozzle – Main	1
22	81–4940	Spacer – Float	1
23	81–2650	Gasket – Bowl Screw	1
24	81–2660	Screw – Bowl	1
25	81–2670	Screw – Drain	1
26	81–2680	Gasket – Drain Screw	1
27	81–4340	Bowl – Float	1
28	81–4920	Float	1
29	81–4700	Needle	1
30	81–2630	Gasket – Float Bowl	1
31	81–4350	Spacer	1
32	81–5610	Jet – Main (#77.5)	1
*	81–5640	Jet – Main (#80 High Alt.)	1
*	81–4270	Choke Shaft Assembly (Incl. Ref. #5–7)	1
*	81–5590	Carburetor Assembly (Incl. Ref. #2–32)	1
*	81–5820	Needle Valve Kit (Incl. Valve Seat & Ref. #29)	1

*Not Illustrated

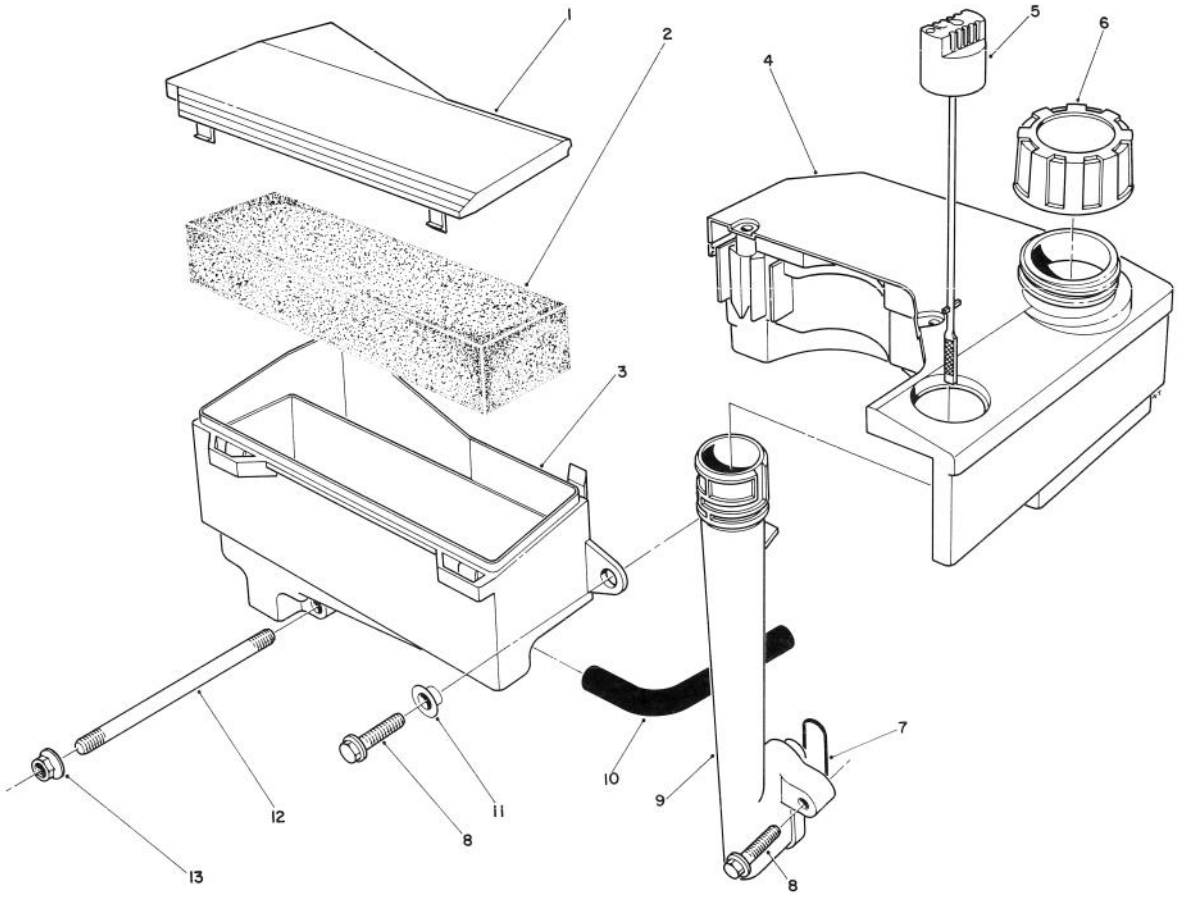

C–0161

AIR CLEANER & FUEL TANK ASSEMBLY (Engine No. VMM1–3)

Ref. No.	Part No.	Description	No. Used
1	81–4110	Cover – Air Cleaner	1
2	81–4120	Filter – Foam	1
3		Body – Air Cleaner	1
4	55–3530	Tank – Fuel	1
5	81–4140	Dipstick – Oil	1
6	55–3570	Cap – Gas	1
7	81–4150	Seal – Oil Tube	1
8	81–4160	Bolt	3

Ref. No.	Part No.	Description	No. Used
9	81–4170	Tube – Oil Fill	1
10	81–4180	Hose – Crankcase Breather	1
11	81–4200	Spacer	1
12	81–4220	Stud – Carburetor	2
13	50–7180	Nut	2
*	81–4240	Air Cleaner Assembly (Incl. Ref. #1 & 3)	1

*Not Illustrated

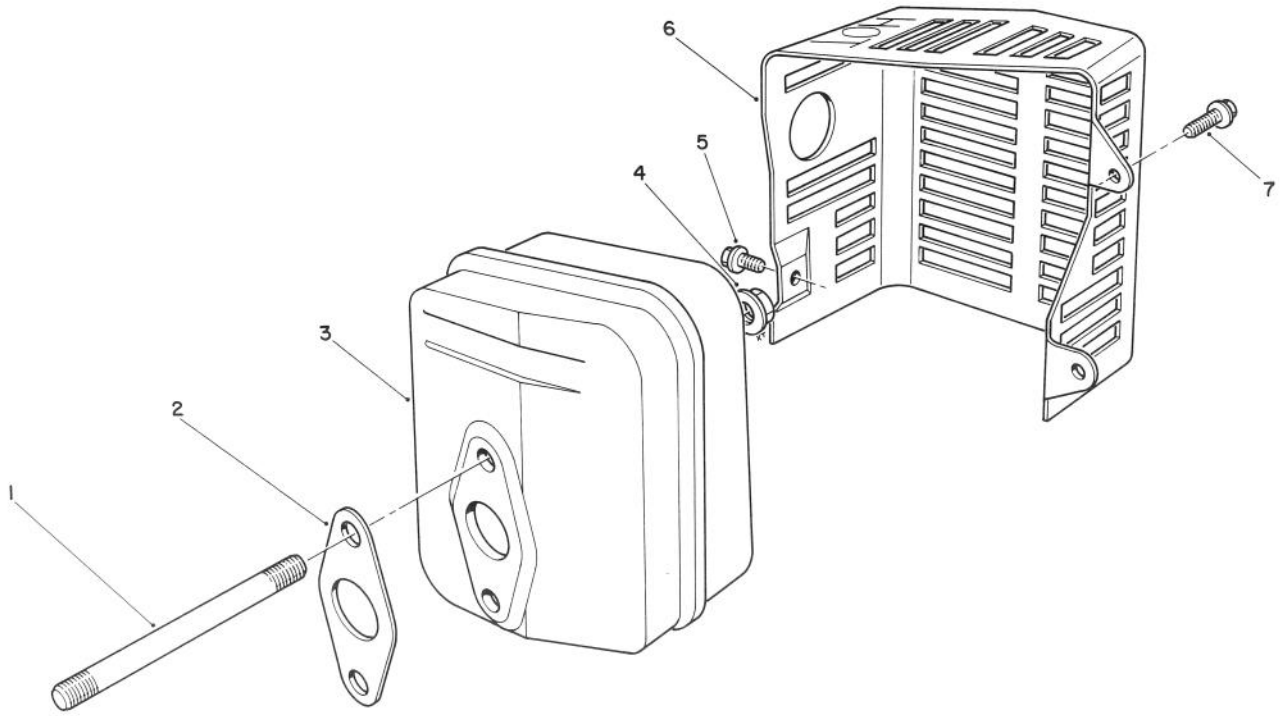

T–0726

MUFFLER ASSEMBLY
(Engine No. VMM1–3)

Ref. No.	Part No.	Description	No. Used
1	81–4380	Stud – Muffler	2
2	81–4390	Gasket – Muffler	1
3	81–4400	Muffler	1
4	50–0530	Nut	2
5	81–4420	Screw	1
6	81–4430	Cover – Muffler	1
7	81–1170	Bolt	2

*Not Illustrated

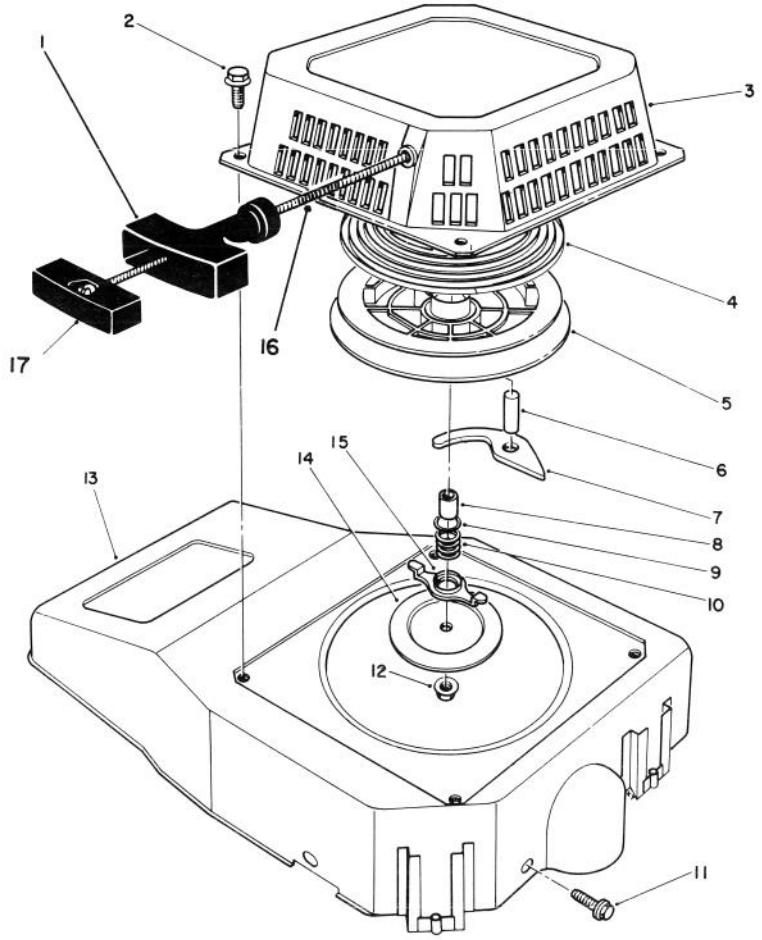

C–0162

RECOIL ASSEMBLY
(Engine No. VMM1–3)

Ref. No.	Part No.	Description	No. Used
1	81–4000	Handle	1
2	81–1280	Bolt	4
3	81–3970	Case – Recoil	1
4	81–4010	Spring – Recoil	1
5	81–4020	Reel – Rope Pulley	1
6	81–4030	Pin	1
7	81–4040	Pawl	1
8	81–4050	Spacer	1
9	81–4060	Washer	1
10	81–4070	Spring – Friction	1
11	81–1170	Bolt	3

Ref. No.	Part No.	Description	No. Used
12	81–4100	Nut – Lock	1
13	81–3960	Shroud – Blower	1
14	81–4090	Plate – Friction	1
15	81–4080	Guide – Pawl	1
16	81–1270	Rope – Recoil	1
17	81–4960	Retainer – Rope	1
*	81–3270	Recoil Starter Assembly (Incl. Ref. #1, 3–10, 12–15 & 17)	1
*	81–3990	Rope & Handle Ass'y (Incl. Ref. #1, 16, & 17)	1

*Not Illustrated

TORO PART NUMBER INDEX

Part No.	Description	Pg. No.	Ref. No.	Qty.
5–2490	Screw – Shoulder	8	19	2
5–2490	Screw – Shoulder	1	25	2
13–5859	Panel – Control	8	7	1
13–5869	Housing – 53cm	1	6	1
13–5889	Door – Discharge	1	10	1
13–5939	Short Block Assembly	12	*	1
14–9949	Wheel & Tire Assembly	2	30	2
14–9959	Wheel Tire & Gear Assy.	6	31	2
17–9426	Screw – Handle	9	7	2
22–4710	Charger – Battery (220V)	8	*	1
23–9591	Spacer	4	5	1
25–7740	Knob – Arm	6	3	2
25–7740	Knob – Spring Arm	1	26	2
27–6231	Bolt – Wheel	2	32	2
27–6231	Bolt – Wheel	6	33	2
27–6250	Bushing – Wheel	2	31	4
27–6250	Bushing – Wheel	6	32	4
29–9570	Bushing – Yoke	6	38	1
36–4780	Washer – Thrust	6	44	1
36–4791	Washer – Thrust	7	48	2
38–7820	Bearing – Ball	7	60	1
40–1940	Washer – Wheel	2	33	4
42–3190	Bolt – Blade	5	8	2
43–4370	Pinion Assembly	4	4	1
44–0500	Spring – Compression	4	3	1
46–5520	Lever – Traction	9	3	1
46–5780	Switch – Starter	8	10	1
46–6432	Screw – Handle	9	2	1
46–8091	Screw – Handle	1	18	2
46–8290	Plate – TORO Logo	3	2	1
46–8800	Lever – Control	9	12	1
47–2900	Bushing – Sleeve	6	19	2
48–2060	Bearing –Needle	6	21	2
49–2040	Screw – Self Tapping	6	8	8
49–2170	Stop – Pinion	4	2	1
49–2750	Pin – Handle	8	20	2
49–8312	Harness – Wire	8	*	1
50–0130	Bolt	14	14	1
50–0190	Bolt	12	53	4
50–0250	Screw – Idle Stop	15	17	1
50–0450	Pin – Dowel	12	44	2
50–0510	Nut	11	32	2
50–0530	Nut	17	4	2
50–0960	Circlip	11	18	2
50–2360	Screw – Pilot	15	16	1
50–7180	Nut	16	13	2
51–3211	Line – Fuel	3	9	1
51–3214	Line – Fuel	3	11	1
52–7430	Control Bar Assembly	9	1	1
53–0860	Bolt	13	1	2
53–4460	Frame – End	4	6	1
53–4500	Starter Motor Assembly	4	*	1
53–4500	Starter Motor Assembly	3	7	1
54–9190	Nut – Flange Lock	5	13	2
55–3530	Tank – Fuel	16	4	1
55–3570	Cap – Gas	16	6	1
55–3760	Gear – Pinion 15T	7	49	1
55–3770	Gear – 49T (1st Gear)	7	58	1
55–3780	Gear – Pinion 20T	7	50	1
55–3790	Gear – 44T (2nd Gear)	7	57	1
55–3800	Gear – Pinion 25T	7	51	1
55–3810	Gear – 39T (3rd Gear)	7	56	1
55–7520	Battery	8	12	1
55–8180	Retainer – Battery	8	13	1
56–6360	Filter – Fuel	3	10	1
56–6380	Screw – Thread Forming	3	6	2
56–6610	Screw – Thread Forming	3	4	2
57–3120	Decal – Recoil	3	3	1
57–3830	Spacer – Tubular	3	5	2
57–5750	Guard – Throttle	14	15	1
60–8710	Case – Gear (Upper)	7	61	1
60–8730	Cover – Gear Case	7	46	1
60–8750	Bushing – Intrmdt. Shaft	7	47	2
60–8770	Bushing – Output Shaft	7	45	1
60–8790	Sleeve – Gear	7	55	1
60–8800	Shaft – Intermediate	7	52	1
60–8810	Retainer – Shift Fork	6	39	1
60–8840	Pulley – Half	6	10	2
60–8850	Bushing – Output Shaft	7	53	1
60–8870	Yoke – Shift	6	37	1
60–8890	Pinion – Bevel	7	59	1
62–3860	Decal – Danger	1	5	1
62–3950	Decal – Step Pad	1	21	1
62–4280	Spacer – Blade	5	9	1
62–5920	Hub – Adapter	5	7	1
62–6660	Spacer	6	9	1
62–6673	Gear Case Assy. Complete	7	*	1
62–7560	Pulley – Engine	5	11	1
62–7700	Blade – 21	5	6	1
63–8360	Key – Ignition	8	3	1
65–2720	Ring – Retaining	6	24	4
65–4710	Ring – Friction	6	25	2
65–4720	Spring – Compression	6	29	2
65–4730	Washer – Thrust (Inner)	6	22	2
65–4740	Washer – Thrust (Keyed)	6	23	4
65–4750	Pinion	6	28	2
65–4760	Washer –Clutch	6	26	2
65–4770	Shaft – Output	6	17	1
65–5010	Ramp – Discharge	2	38	1
65–5042	Pivot Arm Assembly	6	2	2
65–5100	Handle – Door	1	14	1
65–5140	Clamp – Hinge	1	12	2
65–5150	Cover – Access	1	20	1
65–5160	Seal – Door	1	7	1
65–5190	Bracket – Belt Guide	6	7	1
65–5200	Cover	5	10	1
65–5210	Screw – Hex. Socket Hd.	1	13	2
65–5220	Screw – Socket Hd. Cap	2	35	2
65–5220	Screw – Socket Hd. Cap	6	36	2
65–5221	Screw – Bracket	2	37	1
65–5250	Clip – Spring	6	43	1
65–5290	Pin – Hinge	1	16	2
65–5350	Shield – Trailing	1	22	1
65–5360	Spring – Extension	1	4	1
65–5370	Cable – Door	1	8	1
65–5440	Spring Arm Assembly	6	4	2
65–5460	Bushing – Door	1	15	2
65–5480	Seal – Door Side	1	9	2
65–5490	Seal – Door (End)	1	19	1
65–5650	Decal – TORO K.E.	8	23	1
65–5660	Panel – Screen	1	2	1
65–5730	Latch – Handle	8	14	2
66–0010	Bag	10	2	1
66–0020	Panel – Vertical	1	1	1
66–0030	Bracket – Cable Support	5	1	1
66–0210	V–Belt	6	13	1
66–0236	Control – Throttle	8	6	1
66–0280	Decal – Instruction	8	8	1
66–0330	Support – Spacer	9	6	2
66–0360	Cap – End	6	5	2
66–0450	Screw – Shoulder Stud	8	17	2
66–0540	Arm – Front Spring	2	27	2
66–0560	Screw – Shoulder	2	29	2
66–0570	Guide – Belt	3	14	1
66–0580	Arm – Front Pivot	2	28	2
66–0610	Brace – Door	1	17	1
66–0620	Retainer – Belt	5	3	1
66–0640	Bracket – Discharge	2	36	1
66–0680	Decal – French Regulations	2	*	1
66–1790	Decal – Danger	8	2	1
66–6040	Key – Rocking (R.H.)	6	*	1
66–6050	Key – Rocking (L.H.)	6	27	1
71–0620	Cable – Traction	9	4	1
71–0960	Support – Cable	9	10	1

*Not Illustrated

TORO PART NUMBER INDEX (Cont.)

Part No.	Description	Pg. No.	Ref. No.	Qty.
71–8370	Decal – Danger	1	11	1
71–9870	Decal – 53cm	2	39	1
72–4142	Engine – OHV	3	1	1
72–8030	Decal – Danger	8	*	1
74–1660	Cover – Wheel	6	30	2
74–1671	Spacer – Wheel Cover	6	34	2
75–9850	Tube – Oil Drain	3	*	1
76–0760	Key – Shift	6	41	2
76–0770	Collar – Shift	6	42	1
76–0780	Sleeve – Shift Key	6	40	1
76–0920	Lever – Shift	6	16	1
76–1790	Frame – Grass Bag	10	1	1
76–1980	Hanger – Shield	1	24	2
76–2713	Control – Ground Speed	8	1	1
76–2930	Retainer – Cable	6	15	1
80–2770	Cup – Anti Scalp	5	12	1
81–0380	Screw	14	22	1
81–1170	Bolt	11	1	9
81–1170	Bolt	17	7	2
81–1170	Bolt	14	11	2
81–1170	Bolt	18	11	3
81–1270	Rope – Recoil	18	16	1
81–1280	Bolt	18	2	4
81–1300	Bolt	13	4	3
81–1480	Clamp	13	2	1
81–1690	Clamp – Cable	14	13	1
81–1830	Insulator – Kill Switch	14	16	1
81–1840	Terminal – Switch	14	17	1
81–2580	Spring – Pilot Screw	15	15	2
81–2630	Gasket – Float Bowl	15	30	1
81–2650	Gasket – Bowl Screw	15	23	1
81–2660	Screw – Bowl	15	24	1
81–2670	Screw – Drain	15	25	1
81–2680	Gasket – Drain Screw	15	26	1
81–2710	Screw – Choke Valve	15	2	4
81–2720	Valve – Choke	15	3	1
81–2900	Spring	14	21	2
81–2920	Shaft – Throttle Valve	15	8	1
81–2940	Valve – Throttle	15	12	1
81–3250	Plug – Spark	11	11	1
81–3270	Recoil Starter Assembly	18	*	1
81–3280	Block – Engine	11	22	1
81–3290	Seal – Upper Crankshaft	11	23	1
81–3300	Gasket – Breather	11	24	2
81–3320	Cover – Breather	11	28	1
81–3370	Reed Valve Assembly	11	*	1
81–3380	Bearing – Ball	11	30	1
81–3390	Connecting Rod Assembly	11	21	1
81–3400	Plate – Lock	11	31	1
81–3430	Crankshaft	11	33	1
81–3440	Washer	11	34	1
81–3450	Bolt	11	35	7
81–3460	Seal – Lower Crankshaft	11	36	1
81–3470	Cover – Oil Pump	11	37	1
81–3480	Seal – O–Ring	12	38	1
81–3490	Oil Pump Assembly	12	39	1
81–3510	Gasket – Oil Plug	12	41	1
81–3520	Crankcase – Lower	12	42	1
81–3530	Gasket – Crankcase	12	43	1
81–3550	Governor Flyweight Assy.	12	45	1
81–3560	Plunger – Governor	12	47	1
81–3570	Washer	12	48	1
81–3580	Spring – Comp. Release	12	49	1
81–3600	Tappet	12	51	2
81–3610	Stud – Connecting Rod	12	46	2
81–3620	Piston	11	20	1
81–3630	Pin – Piston	11	19	1
81–3650	Ring Set, Piston	11	17	1
81–3660	Valve – Exhaust	11	15	1
81–3670	Valve – Intake	11	16	1
81–3690	Pin – Dowel	11	13	2
81–3710	Guide – Push Rod	11	10	1
81–3720	Spring – Valve	11	9	2
81–3730	Retainer – Valve Spring	11	8	2
81–3740	Arm – Rocker	11	7	2
81–3750	Pivot – Rocker Arm	11	6	2
81–3760	Nut – Jam	11	5	2
81–3770	Gasket – Cover	11	4	1
81–3780	Cover – Rocker Arm	11	3	1
81–3790	Washer	11	2	4
81–3800	Stud – Rocker Arm	12	55	2
81–3810	Rod – Push	12	54	2
81–3820	Gasket Set	11	*	1
81–3830	Guide – Valve	12	52	2
81–3860	Cover – Spark Plug	13	12	1
81–3890	Nut	13	3	1
81–3910	Cup – Starter	13	5	1
81–3920	Flywheel	13	10	1
81–3930	Key – Flywheel	13	7	1
81–3940	Coil – Alternator	13	8	1
81–3950	Bolt	13	9	2
81–3960	Shroud – Blower	18	13	1
81–3970	Case – Recoil	18	3	1
81–3990	Rope & Handle Ass'y	18	*	1
81–4000	Handle	18	1	1
81–4010	Spring – Recoil	18	4	1
81–4020	Reel – Rope Pulley	18	5	1
81–4030	Pin	18	6	1
81–4040	Pawl	18	7	1
81–4050	Spacer	18	8	1
81–4060	Washer	18	9	1
81–4070	Spring – Friction	18	10	1
81–4080	Guide – Pawl	18	15	1
81–4090	Plate – Friction	18	14	1
81–4100	Nut – Lock	18	12	1
81–4110	Cover – Air Cleaner	16	1	1
81–4120	Filter – Foam	16	2	1
81–4140	Dipstick – Oil	16	5	1
81–4150	Seal – Oil Tube	16	7	1
81–4160	Bolt	16	8	3
81–4170	Tube – Oil Fill	16	9	1
81–4180	Hose – Crankcase Breather	16	10	1
81–4200	Spacer	16	11	1
81–4220	Stud – Carburetor	16	12	2
81–4240	Air Cleaner Assembly	16	*	1
81–4250	Gasket – Air Cleaner	15	1	1
81–4270	Choke Shaft Assembly	15	*	1
81–4280	Washer	15	9	1
81–4290	Seal – Throttle Shaft	15	10	1
81–4300	Clamp	15	18	1
81–4310	Tube – Bowl Vent	15	19	1
81–4340	Bowl – Float	15	27	1
81–4350	Spacer	15	31	1
81–4380	Stud – Muffler	17	1	2
81–4390	Gasket – Muffler	17	2	1
81–4400	Muffler	17	3	1
81–4420	Screw	17	5	1
81–4430	Cover – Muffler	17	6	1
81–4440	Rod – Choke	14	18	1
81–4450	Rod – Carburetor	14	1	1
81–4460	Spring – Choke Lever	14	8	1
81–4470	Spring – Carburetor Rod	14	7	1
81–4480	Shaft – Governor	14	2	1
81–4490	Nut	14	4	1
81–4500	Governor Arm Assembly	14	5	1
81–4510	Throttle & Choke Control	14	6	1
81–4520	Spring – Governor	14	10	1
81–4530	Rivet	14	12	2
81–4540	Ring – Retaining	14	3	1
81–4550	Screw	14	20	1
81–4560	Screw	14	19	1
81–4570	Spring	14	9	1
81–4700	Needle	15	29	1
81–4710	Gasket – Cylinder Head	11	14	1

*Not Illustrated

TORO PART NUMBER INDEX (Cont.)

Part No.	Description	Pg. No.	Ref. No.	Qty.
81–4780	Clamp	14	23	1
81–4920	Float	15	28	1
81–4940	Spacer – Float	15	22	1
81–4960	Retainer – Rope	18	17	1
81–4970	Plug – Oil Drain	12	40	1
81–5500	Shaft – Choke Control	15	7	1
81–5520	Ring – Choke (Upper)	15	6	1
81–5530	Ring – Choke (Lower)	15	5	1
81–5540	Head – Cylinder	11	12	1
81–5550	Camshaft Assembly	12	50	1
81–5560	Gasket – Carburetor	15	13	2
81–5570	Block – Insulator	15	14	1
81–5580	Magneto Coil Assembly	13	11	1
81–5590	Carburetor Assembly	15	*	1
81–5600	Pin – Hinge	15	20	1
81–5610	Jet – Main (#77.5)	15	32	1
81–5620	Jet – Pilot (#38.8)	15	11	1
81–5630	Nozzle – Main	15	21	1
81–5640	Jet – Main (#80 High Alt.)	15	*	1
81–5730	Cylinder Head Ass'y	12	*	1
81–5820	Needle Valve Kit	15	*	1
84–8331	Handle	8	9	1
218–461	Nut – Lock	8	4	1
218–550	Connector – Wire	13	6	1
237–153	Seal – ORing	6	18	2
2412–95	Clamp – Fuel Line	3	8	4
256–313	Washer – Nylon	8	18	2
302–56	Fitting – Grease	6	20	2
321–3	Screw – Hex. Hd. Cap	9	11	1
3254–5	Washer – Lock	8	5	1
3256–22	Washer – Flat	9	9	1
3256–23	Washer – Flat	8	16	2
3256–23	Washer – Flat	1	23	2
3256–24	Washer – Flat	5	4	1
3256–24	Washer – Flat	6	12	1
3257–3	Key – Woodruff	5	15	1
3272–5	Pin – Cotter	6	14	1
3290–378	Tie – Cable	8	22	5
3296–5	Nut – Lock	6	11	1
3296–6	Nut – Lock	2	34	4
3296–6	Nut – Lock	6	35	2
3296–29	Nut – Lock	8	15	2
3296–33	Nut – Lock	5	14	1
3296–42	Nut – Lock	9	8	2
3296–47	Nut – Lock	8	21	2
3296–58	Nut – Lock	9	5	2
32104–76	Screw – Self Tapping	8	11	5
32121–120	Pin – Coil	7	54	1
32144–15	Screw – Hex. Flange Hd.	5	5	1
32144–70	Screw – Hex. Hd.	1	3	3
32144–70	Screw – Hex. Hd. Cap	5	2	5
32144–70	Screw – Hex. Hd. Cap	3	13	2
32144–70	Screw – Hex. Washer Hd.	6	1	3
32144–102	Screw – Hex. Hd. Cap	3	12	3
32151–47	Ring – Retaining	4	1	1

OPTIONAL EQUIPMENT

Side Discharge Chute Kit ..... Model No. 59112
Dethatcher Kit ..... Model No. 59131
Leaf Shredder Kit ..... Model No. 59180
Spark Arrestor Kit ..... Part No. 56–6730

*Not Illustrated

PRODUCT CHANGES

In an effort to make improvements available to TORO owners as quickly as possible, minor changes are incorporated into Toro's products from time to time that do not become immediately shown in the Parts Catalog. If such a change has been made in your unit, which is not reflected in your manual, see your TORO Distributor or his Authorized TORO Service Dealer for information and part numbers.

COUNTRIES OTHER THAN THE UNITED STATES OR CANADA

Customers who have purchased TORO products exported from the United States or Canada should contact their Toro Distributor (Dealer) to obtain guarantee policies for your country, province or state. If for any reason you are dissatisfied with your Distributor's service or have difficulty obtaining guarantee information, contact the TORO importer. If all other remedies fail, you may contact us at The Toro Company.

MAINTENANCE RECORD

Date								

Compliance with Radio Interference Regulations Certified.
Certifie Conforme au Reglement sur le Brouillage Radioelectrique.

AL-931989

Litho in U.S.A.

MAINTENANCE RECORD

Date								

MAINTENANCE RECORD

Date								