FORM NO. 3316–183

TORO®

MODEL NO. 26630B–3900001 & UP
MODEL NO. 26630BG–3900001 & UP

PARTS CATALOG

53cm REAR BAGGING MOWER

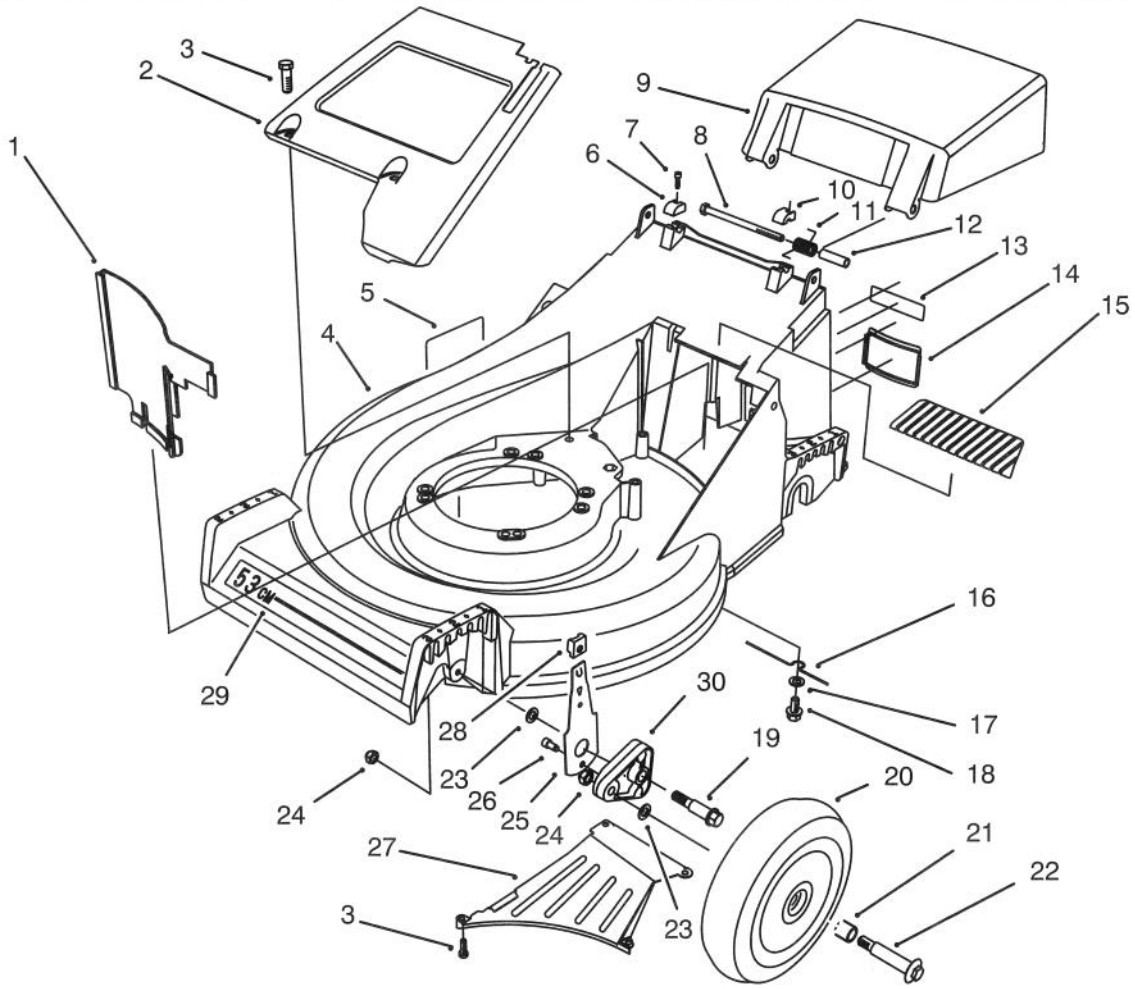

C–1568

HOUSING ASSEMBLY

Ref. No.	Part No.	Description	No. Used
1	66–0020	Panel – Vertical	1
2	65–5660	Panel – Screen	1
3	32144–70	Screw – Cap Hex. Hd.	6
4	16–1769	Housing – 53cm (Incl. Ref. #5 & 29)	1
5	62–3860	Decal – Danger	1
6	71–7910	Cap – Hinge Bolt R.H.	1
7	65–5210	Screw – Thread Forming	2
8	322–29	Screw – Hex Hd. Cap	2
9	71–9800	Door – Discharge	1
10	71–7900	Cap – Hinge Bolt L.H.	1
11	71–9840	Spring – Door	2
12	71–8580	Spacer – Door	2
13	66–0680	Decal – French Regulation	1
14	71–9650	Access – Cover	1

Ref. No.	Part No.	Description	No. Used
15	71–9920	Cover – Top	1
16	66–0620	Retainer – Belt	1
17	3256–24	Washer – Flat	1
18	32144–15	Screw – Hex Flange Hd.	1
19	66–0560	Screw – Shoulder	2
20	14–9949	Wheel & Tire Assembly (Incl. Ref. #21)	2
21	27–6250	Bushing – Wheel	2
22	27–6231	Bolt – Wheel	2
23	40–1940	Washer – Wheel Bolt	4
24	3296–6	Nut – Lock	4
25	66–0540	Arm – Spring Front	2
26	65–5220	Screw – Cap Socket Hd.	2
27	71–9640	Ramp – Discharge	1
28	25–7740	Knob – Arm	2

© The TORO Company –1993
All Rights Reserved

3316–183

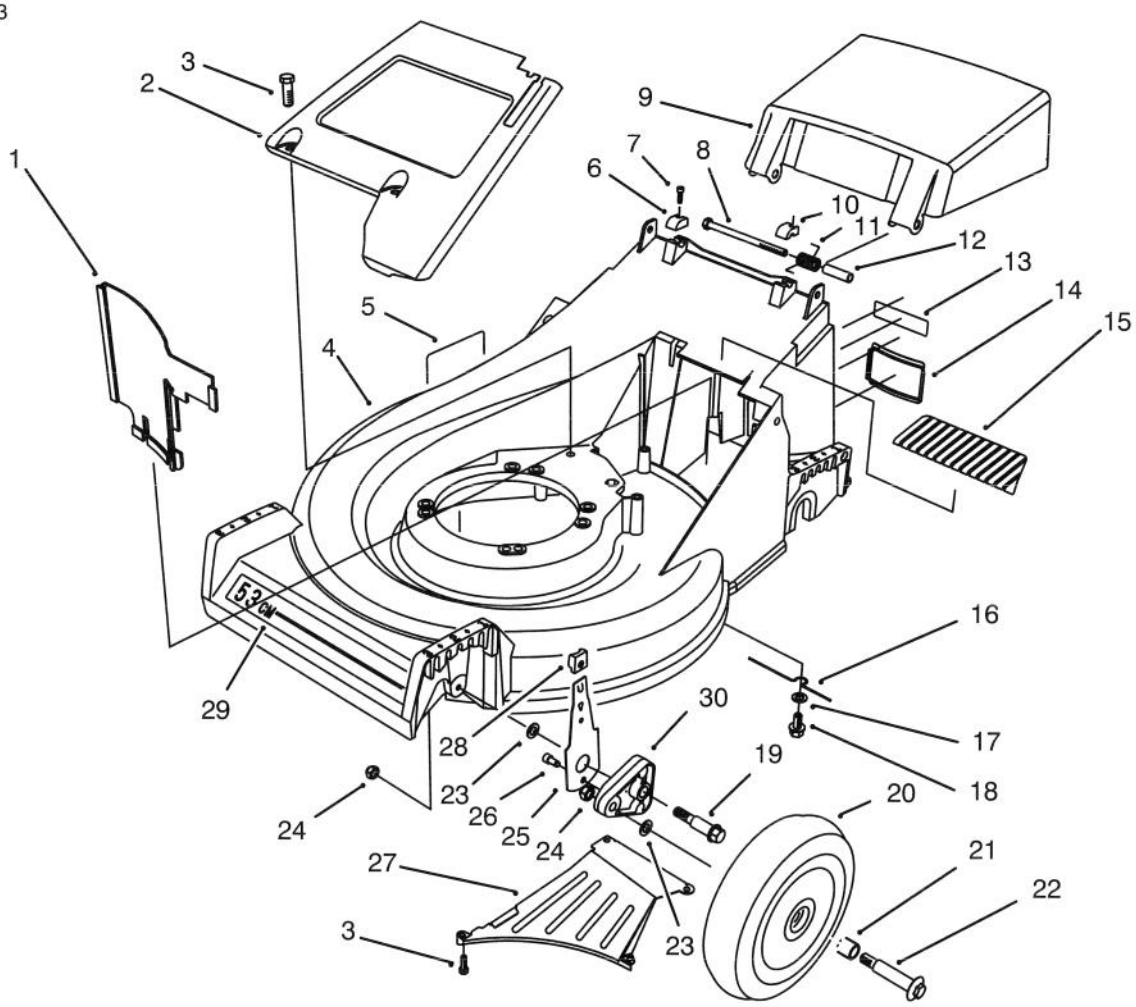

HOUSING ASSEMBLY (Continued)

Ref. No.	Part No.	Description	No. Used
29	71–9870	Decal – Deck 53cm (Model No. 26630B Only)	1
30	66–0580	Arm – Pivot	2
*	17367	Decal – Front (Model No. 26630BG Only)	1
*	11715	Decal – Triangle (Model No. 26630BG Only)	1

Ref. No.	Part No.	Description	No. Used
*	17738	Decal – Safety (Model No. 26630BG Only)	1
*	18075	Decal – Specification (Model No. 26630BG Only)	1

*Not Illustrated

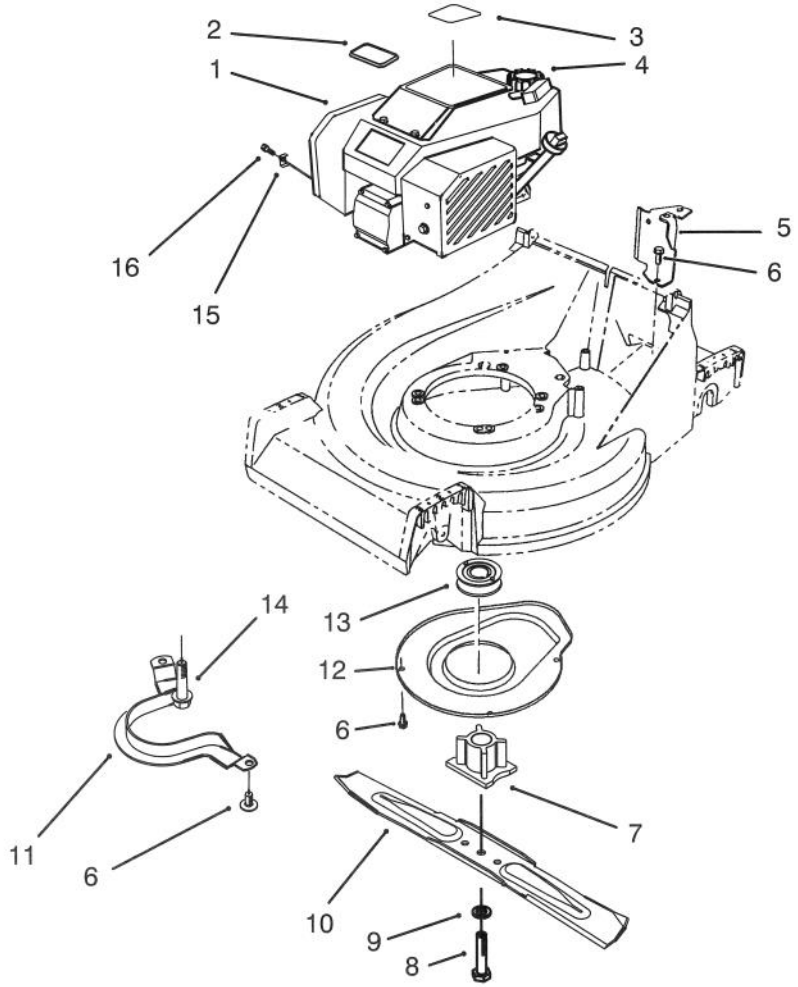

C–1566

ENGINE ASSEMBLY

Ref. No.	Part No.	Description	No. Used
1	92–6528	Engine	1
2	92–2289	Plate – TORO Logo	1
3	80–4800	Decal – Recoil	1
4	55–3570	Gas Cap Assembly	1
5	66–0030	Bracket – Cable Support	1
6	32144–70	Screw – Hex Hd. Cap	7
7	62–7540	Retainer – Blade	1
8	26–0670	Bolt – Blade	1

Ref. No.	Part No.	Description	No. Used
9	3253–22	Washer – Blade	1
10	62–7700	Blade – 21"	1
11	66–0570	Guide – Belt	1
12	65–5200	Cover	1
13	62–7550	Pulley – Engine	1
14	32144–102	Screw – Thread Forming	3
15	2210–249	Clamp – Throttle	1
16	86–7990	Screw – Clamp	1

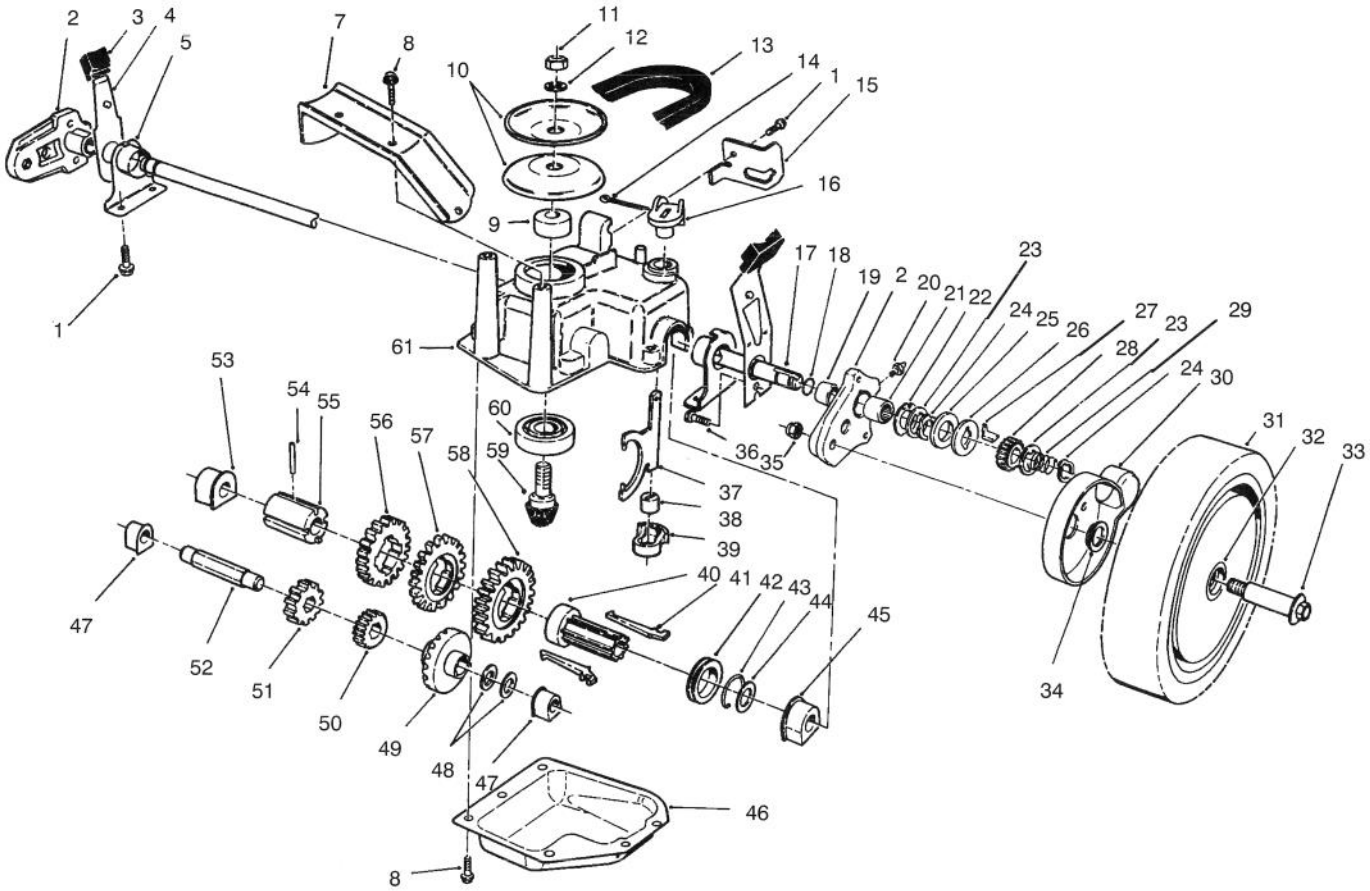

C–1555

GEAR CASE ASSEMBLY

Ref. No.	Part No.	Description	No. Used
1	32144–70	Screw – Hex. Washer Hd.	5
2	65–5042	Pivot Arm Assembly (Incl. Ref. #19–21)	2
3	25–7740	Knob – Arm	2
4	65–5440	Spring Arm Assembly	2
5	66–0360	Cap – End	2
7	65–5190	Bracket – Belt Guide	1
8	49–2040	Screw – Self Tapping	8
9	62–6660	Spacer	1
10	60–8840	Pulley – Half	2
11	3296–5	Nut – Lock	1
12	3256–24	Washer – Flat	1
13	66–0210	V–Belt	1
14	3272–5	Pin – Cotter	1
15	76–2930	Retainer – Cable	1
16	76–0920	Lever – Shift	1
17	65–4770	Shaft – Output	1
18	237–153	Seal – "O"Ring	2
19	70–9760	Bushing – Sleeve	2
20	302–56	Fitting – Grease	2
21	48–2060	Bearing –Needle	2
22	65–4730	Washer – Thrust (Inner)	2
23	65–4740	Washer – Thrust (Keyed)	4

Ref. No.	Part No.	Description	No. Used
24	65–2720	Ring – Retaining	4
25	65–4710	Ring – Friction	2
26	65–4760	Washer –Clutch	2
27	66–6050	Key – Rocking (L.H.)	1
*	66–6040	Key – Rocking (R.H.)	1
28	65–4750	Pinion	2
29	65–4720	Spring – Compression	2
30	74–1660	Cover – Wheel	2
31	14–9959	Wheel Tire & Gear Assy. (Incl. Ref. #32)	2
32	27–6250	Bushing – Wheel	4
33	27–6231	Bolt – Wheel	2
34	74–1671	Spacer – Wheel Cover	2
35	3296–6	Nut – Lock	2
36	65–5220	Screw – Socket Hd. Cap	2
37	60–8870	Yoke – Shift	1
38	29–9570	Bushing – Yoke	1
39	60–8810	Retainer – Shift Fork	1
40	76–0780	Sleeve – Shift Key	1
41	76–0760	Key – Shift	2
42	76–0770	Collar – Shift	1
43	65–5250	Clip – Spring	1
44	36–4780	Washer – Thrust	1

*Not Illustrated

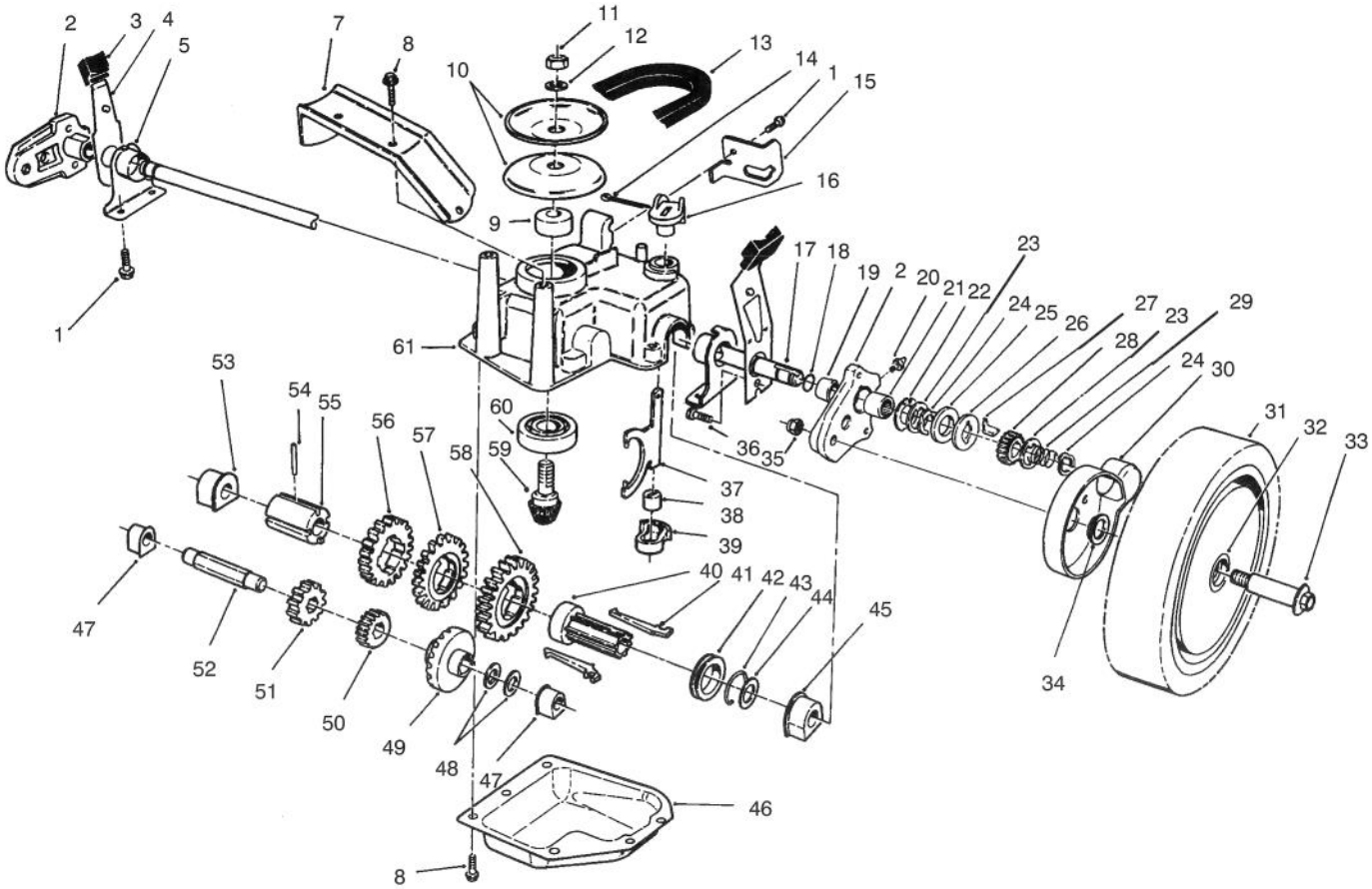

C–1555

GEAR CASE ASSEMBLY (Continued)

Ref. No.	Part No.	Description	No. Used
45	60–8770	Bushing – Output Shaft	1
46	60–8730	Cover – Gear Case	1
47	60–8750	Bushing – Intrmdt. Shaft	2
48	36–4791	Washer – Thrust	2
49	55–3760	Gear – Pinion 15T	1
50	55–3780	Gear – Pinion 20T	1
51	55–3800	Gear – Pinion 25T	1
52	60–8800	Shaft – Intermediate	1
53	60–8850	Bushing – Output Shaft	1

Ref. No.	Part No.	Description	No. Used
54	32121–120	Pin – Coil	1
55	60–8790	Sleeve – Gear	1
56	55–3810	Gear – 39T (3rd Gear)	1
57	55–3790	Gear – 44T (2nd Gear)	1
58	55–3770	Gear – 49T (1st Gear)	1
59	60–8890	Pinion – Bevel	1
60	38–7820	Bearing – Ball	1
61	60–8710	Case – Gear (Upper)	1
*	62–6673	Gear Case Assy. Complete	1

*Not Illustrated

3316–183

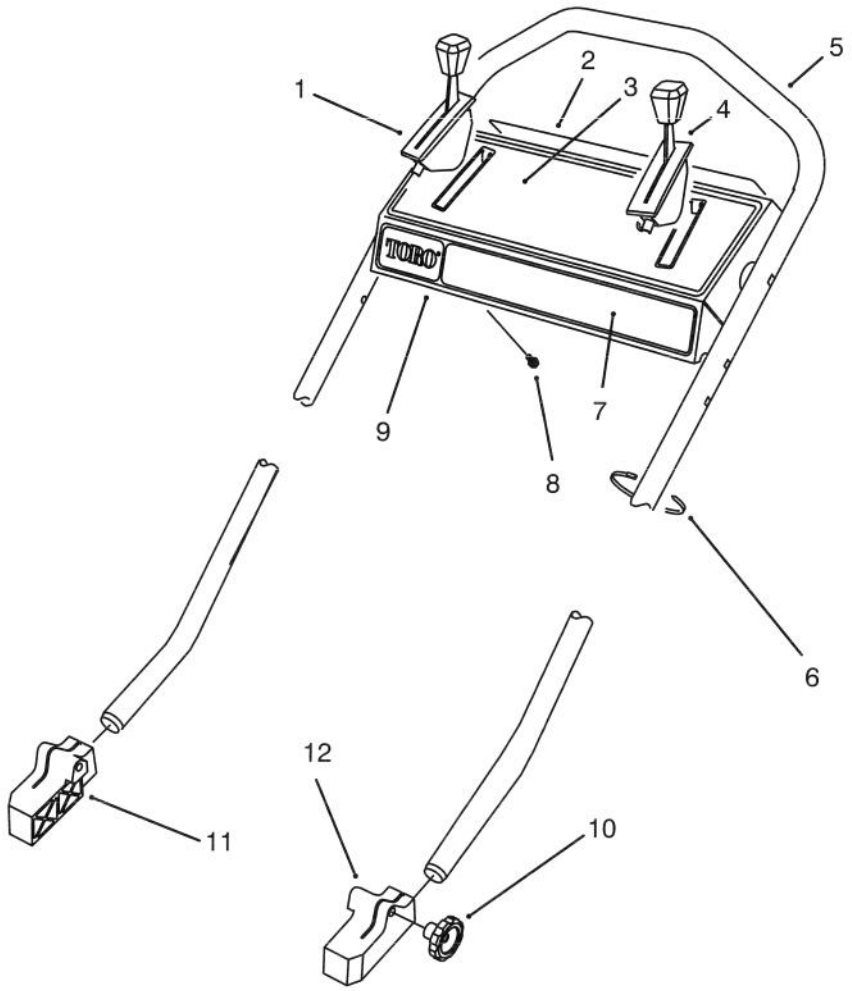

C–1569

HANDLE ASSEMBLY

Ref. No.	Part No.	Description	No. Used
1	76–2713	Control – Ground Speed	1
2	66–1790	Decal – Danger	1
3	71–9877	Decal – Instruction	1
4	66–0236	Control – Throttle Bend Type #3 Sheath Lg. 57" (145cm) Wire Lg. 2–3/8" (6cm)	1
5	71–9690	Handle	1

Ref. No.	Part No.	Description	No. Used
6	3290–378	Tie – Cable	5
7	71–9873	Decal – Panel	1
8	32104–76	Screw – Self Tapping	5
9	16–1729	Control Panel Assembly (Incl. Ref. #2, 3, & 7)	1
10	19–4050	Knob – Handle Release	2
11	71–8100	Mount – Handle R.H.	1
12	71–8090	Mount – Handle L.H.	1

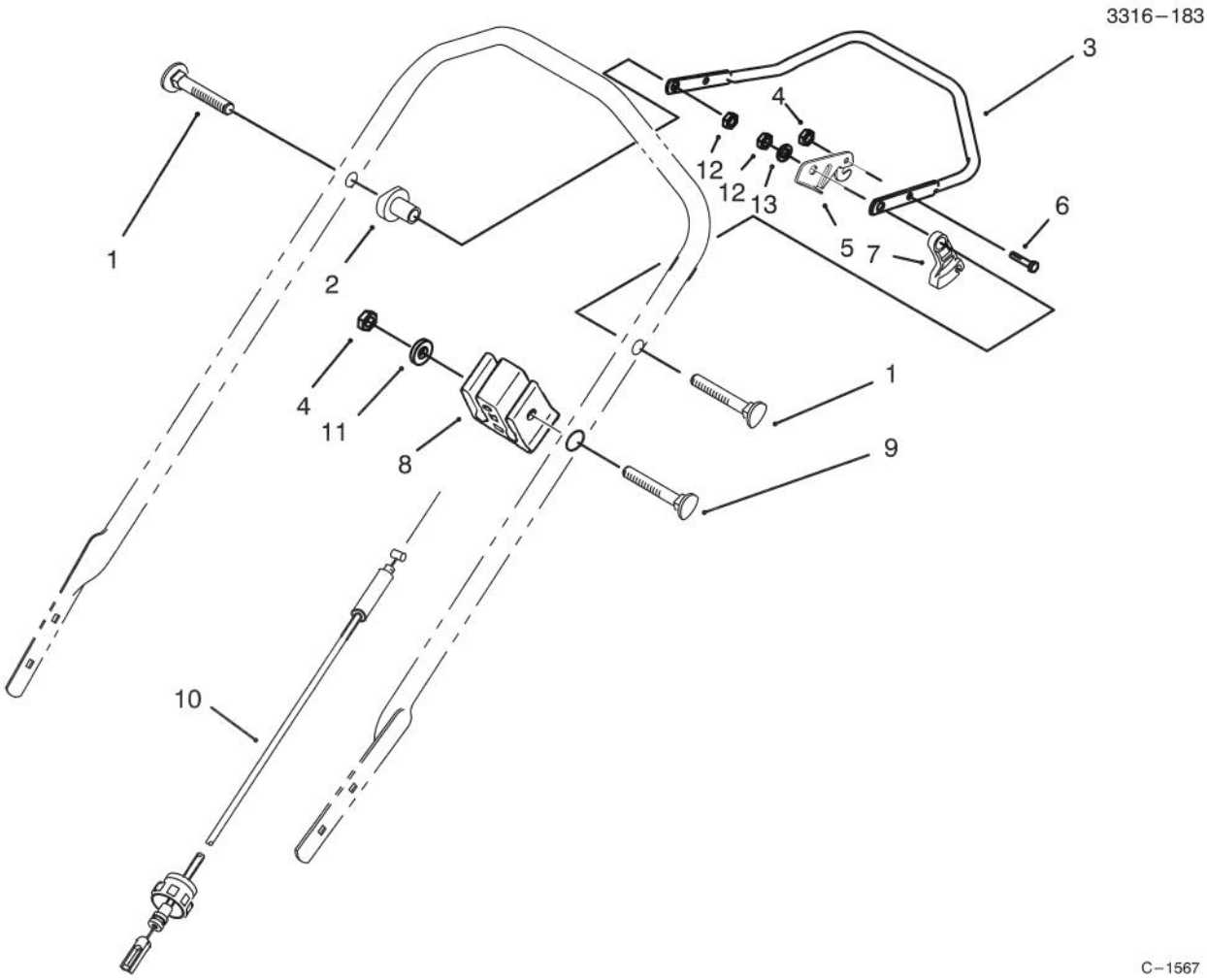

TRACTION CONTROL ASSEMBLY

Ref. No.	Part No.	Description	No. Used
1	17–9426	Screw – Handle	2
2	66–0330	Support – Spacer	2
3	52–7430	Control Bar Assembly	1
4	3296–42	Nut – Lock	2
5	46–8800	Lever – Control	1
6	321–3	Screw – Cap Hex. Hd.	1
7	46–5520	Lever – Traction	1

Ref. No.	Part No.	Description	No. Used
8	71–0960	Support – Cable	1
9	46–6432	Screw – Handle	1
10	71–0620	Cable – Traction	1
11	3256–22	Washer – Flat	1
12	3296–58	Nut – Lock	2
13	3256–23	Washer – Flat	2

3316–183

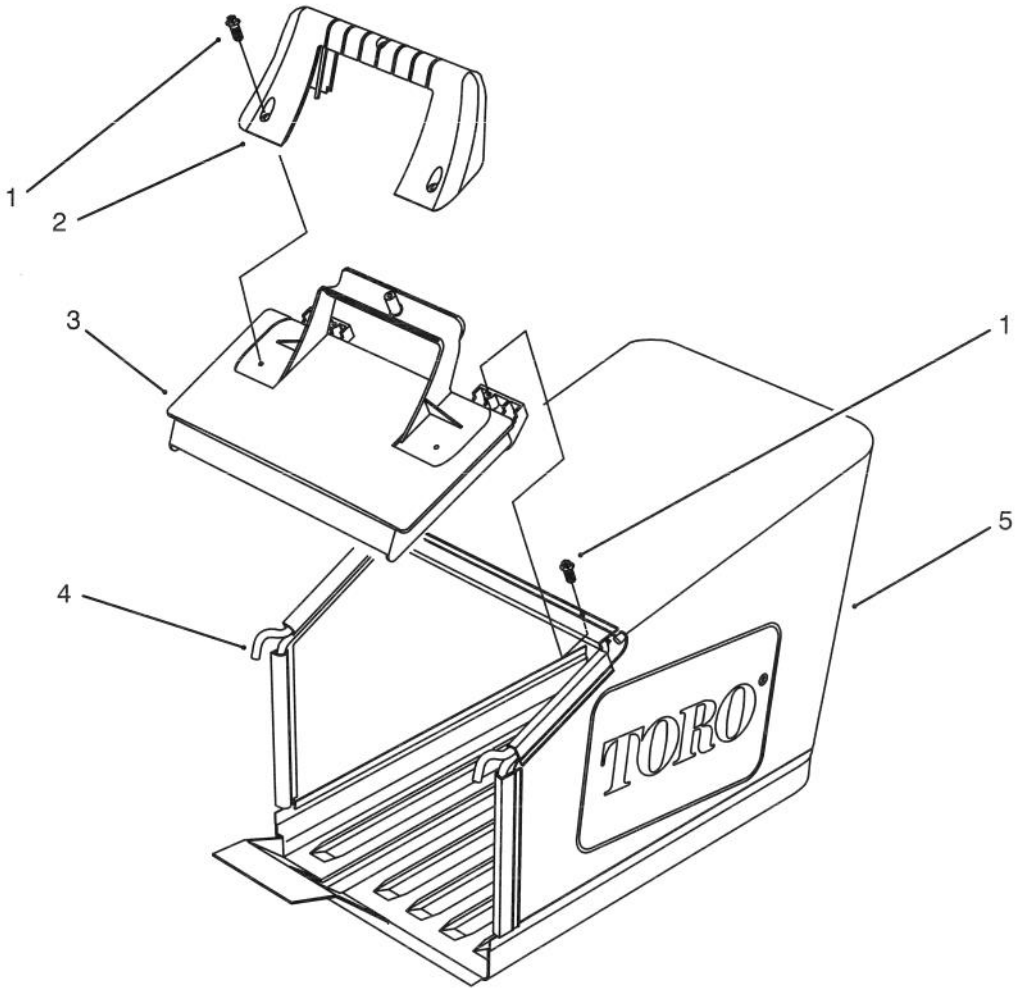

C–1570

GRASS BAG ASSEMBLY

Ref. No.	Part No.	Description	No. Used
1	32144–111	Screw – Index Hex Washer Head	5
2	71–9480	Handle – Door	1
3	71–9470	Door – Bag	1
4	71–9930	Frame – Grass Bag	1
5	71–9680	Bag – Grass 53cm	1

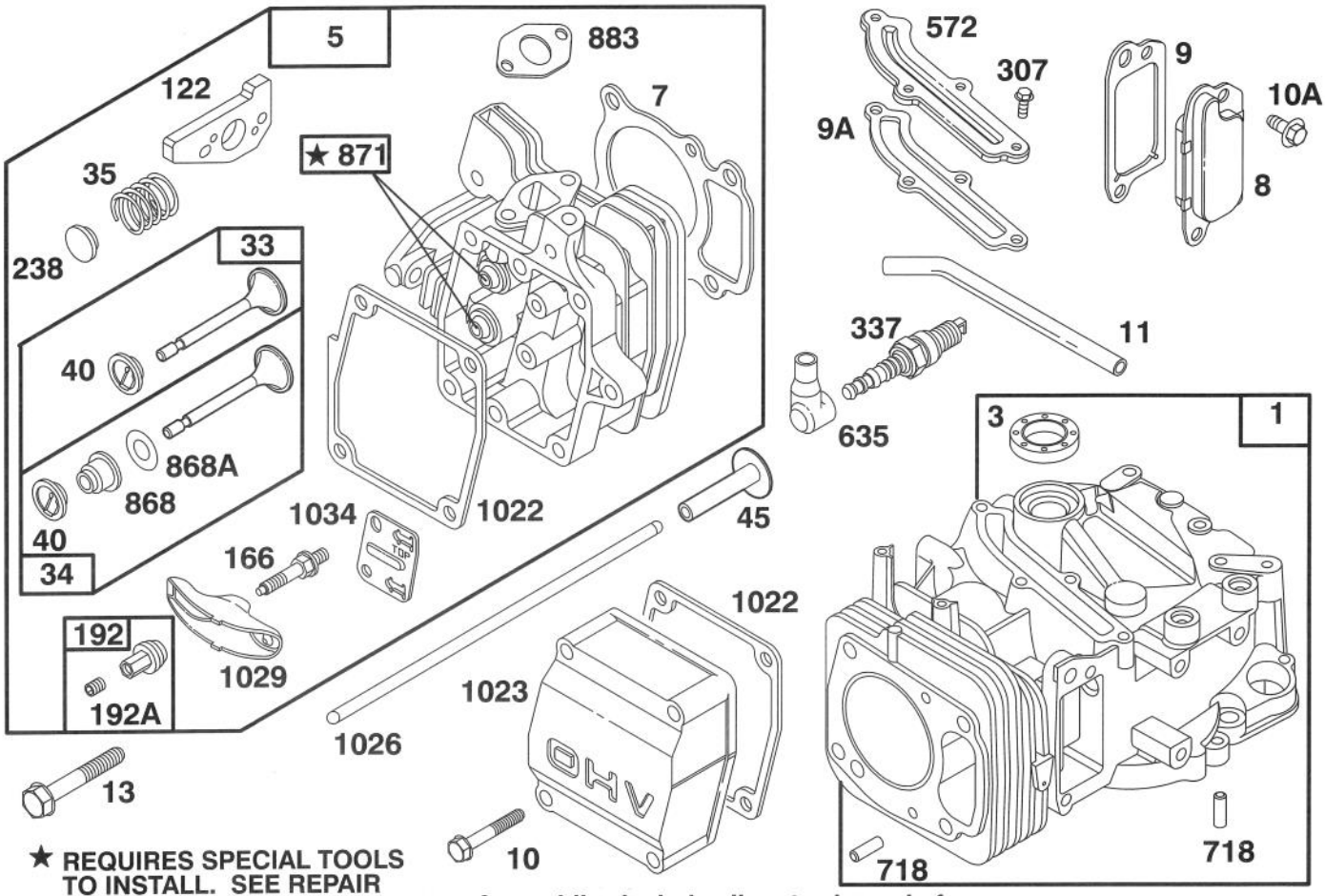

★ REQUIRES SPECIAL TOOLS TO INSTALL. SEE REPAIR INSTRUCTION MANUAL.

Assemblies include all parts shown in frames.

ENGINE GTS 150

Ref. No.	Part No.	Description	No. Used
1	77–7590	Cylinder Assy	1
*3	77–9060	Seal – Oil	1
5	77–7730	Head – Cylinder	1
*7	77–7740	Gasket – Cylinder Head	1
8	77–9260	Breather Assy	1
*9	77–9250	Gasket – Breather	1
*9A	77–7410	Gasket – Breather	1
10	77–7360	Screw – Hex Head (valve cover)	4
10A	77–9200	Screw – Hex Head	2
11	77–7350	Tube – Breather	1
13	77–7630	Screw – Cylinder Head	4
33	77–7860	Valve – Exhaust	1
34	77–7880	Valve – Intake	1
35	77–7810	Spring – Valve	2
40	77–7870	Retainer – Spring	2
45	77–7610	Tappet – Valve	2
†122	77–7820	Adapter Assy	1
166	77–7780	Stud – Rocker Arm	2
192	77–7910	Ball & Screw – Rocker Arm	2
192A	77–9090	Screw – Set	1
238	77–7800	Cap – Valve	2
307	77–7420	Screw – Cover Mtg (breather cover)	4

Ref. No.	Part No.	Description	No. Used
337	77–7330	Plug – Spark	1
572	77–7400	Cover – Breather	1
635	77–7340	Elbow – Spark Plug	1
718	77–7600	Pin – Cylinder	2
*868	77–7890	Seal Assy – Valve	1
*868A	77–7900	Gasket – Valve	1
871	77–7850	Bushing – Guide	1
*883	77–7760	Gasket – Exhaust	1
*1022	77–7320	Gasket – Rocker Cover	1
1023	77–7060	Cover – Valve	1
1026	77–7620	Rod – Push	2
1029	77–7790	Arm – Rocker	2
1034	77–7770	Guide – Push Rod	1
	77–9020	Short Block (Incl. Ref. # 1, 7, 9, 9A, 45, 122, 883, & 1022 pg. 9) (Incl. Ref. # 16, 18, 25, 28, 29, 46, 219, 230, 615, 616 979, & 1024 pg. 10)	
		(Incl. Ref. #163 pg. 12)	1

* Included in Gasket Set–Part No. 77–8900
†Included in Carburetor Overhaul Kit–Part No. 77–8920

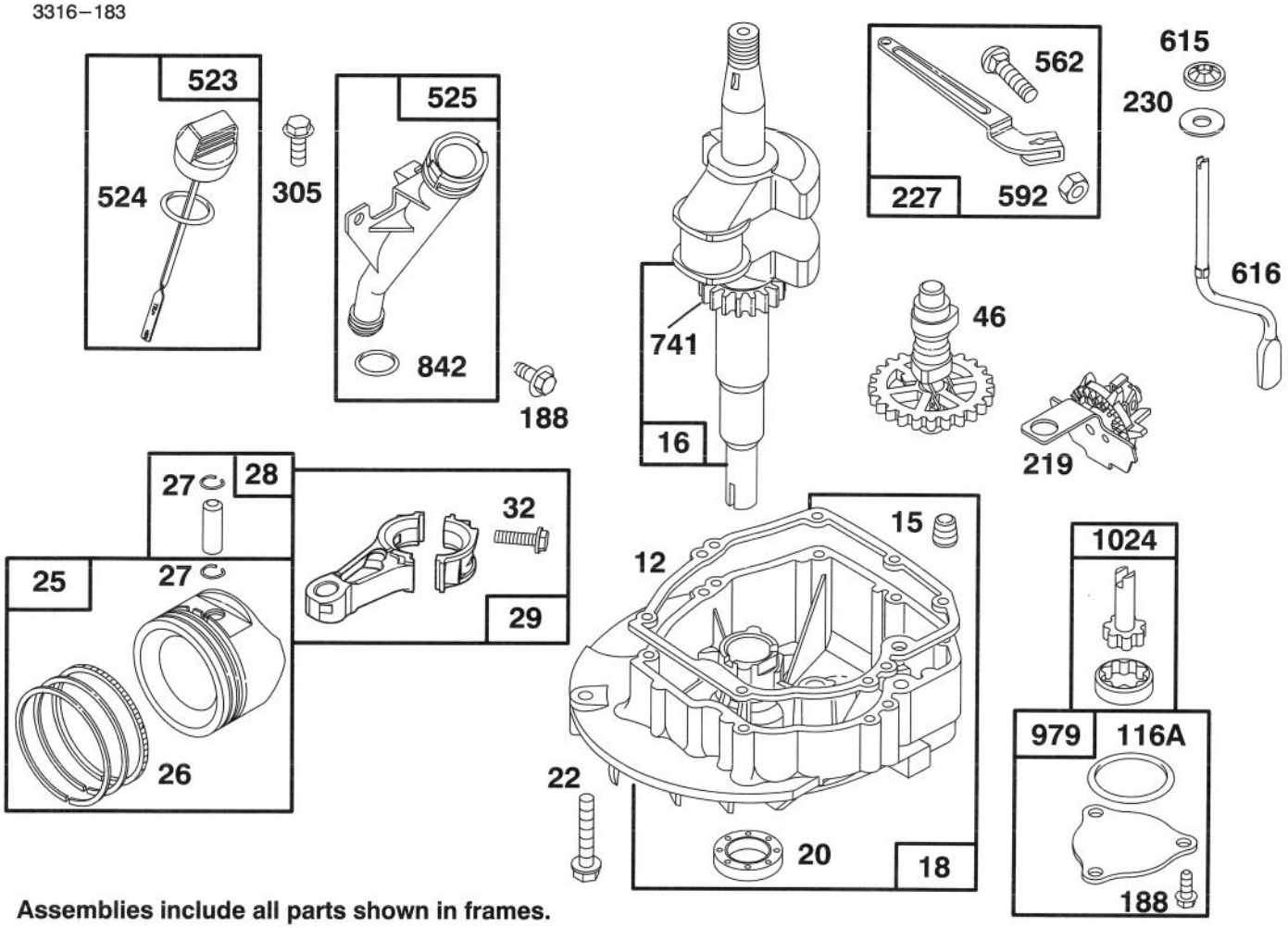

Assemblies include all parts shown in frames.

ENGINE GTS 150

Ref. No.	Part No.	Description	No. Used
*12	77–7550	Gasket – Engine Base	1
15	77–9240	Plug – Pipe	1
16	77–7520	Crankshaft Note: Order Part No. 77–7540 For Timing Gear Key	1
18	77–7560	Base – Engine	1
*20	77–7570	Seal – Oil	1
22	77–9070	Screw– Engine Base	7
25	77–7690	Piston Assy (Std)	1
26	77–7700	Ring Set (Std)	1
27	77–7710	Lock – Piston Pin	2
28	77–7720	Pin Assy – Piston	1
29	77–7670	Rod – Connecting	1
32	77–7680	Screw – Connecting Rod	2
46	77–7490	Gear – Cam	1
*116A	77–7660	O–Ring	1

Ref. No.	Part No.	Description	No. Used
188	77–7450	Screw – Hex Head	5
219	77–7500	Gear – Governor	1
227	77–7370	Lever Assy – Governor	1
230	77–7470	Washer	1
305	77–8310	Screw – Hex Head	2
523	77–7260	Dipstick – Oil	1
*524	77–7270	Seal – O Ring	1
525	77–7280	Tube – Oil Filler	1
562	77–7380	Bolt – Governor Lever	1
592	77–7390	Nut – Hex	1
615	77–7480	Pushnut	1
616	77–7460	Crank – Governor	1
741	77–7530	Gear – Timing	1
*842	77–7300	Seal – O Ring	1
979	77–7650	Cover – Oil Pump	1
1024	77–7640	Pump – Oil	1

* Included in Gasket Set–Part No. 77–8900

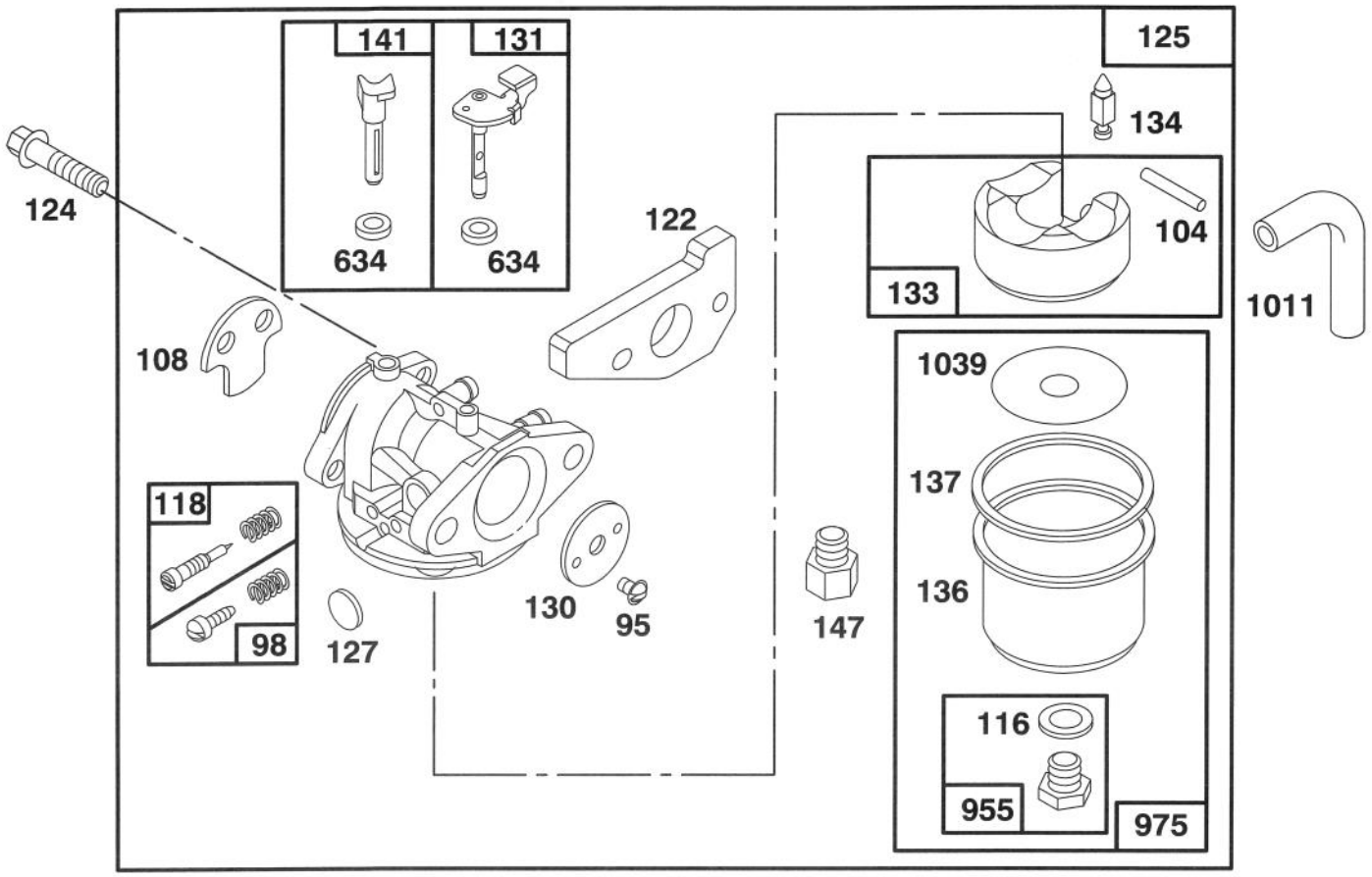

Assemblies include all parts shown in frames.

ENGINE GTS 150

Ref. No.	Part No.	Description	No. Used
95	77–8090	Screw – Valve Mtg	1
98	77–8240	Screw – Idle Adj	1
†104	77–8180	Pin – Float Hinge	1
108	77–8070	Valve – Choke	1
††116	77–8210	Sealing – Gasket	1
†118	77–8230	Valve & Spring – Needle	
†122	77–7820	Adapter Assy	1
124	77–7970	Screw – Hex Head (carb mtg)	2
125	77–8050	Carburetor Assy	1
†127	77–8100	Plug – Welch	1
130	77–8080	Valve – Throttle	1
131	77–8160	Shaft – Throttle	1
133	77–8170	Float – Carburetor	1

Ref. No.	Part No.	Description	No. Used
†134	77–8110	Valve – Inlet (Includes Seat)	1
136	77–7240	Bowl – Fuel	1
††137	77–8200	Gasket – Float Bowl	1
141	77–8130	Shaft – Choke	1
147	77–8120	Adapter – Jet Note: For High Altitude Jet, Order Part No. 77–9000	1
‡634	77–8150	Washer – Seal	2
955	77–8220	Screw – Hex Head	1
975	77–8190	Bowl Assy – Carburetor	1
1011	77–8040	Tube – Vent	1
†1039	77–7250	Limiter – Float	1

† Included in Carburetor Overhaul Kit–Part No. 77–8920
‡ Included in Carburetor Gasket Kit–Part No. 77–8930

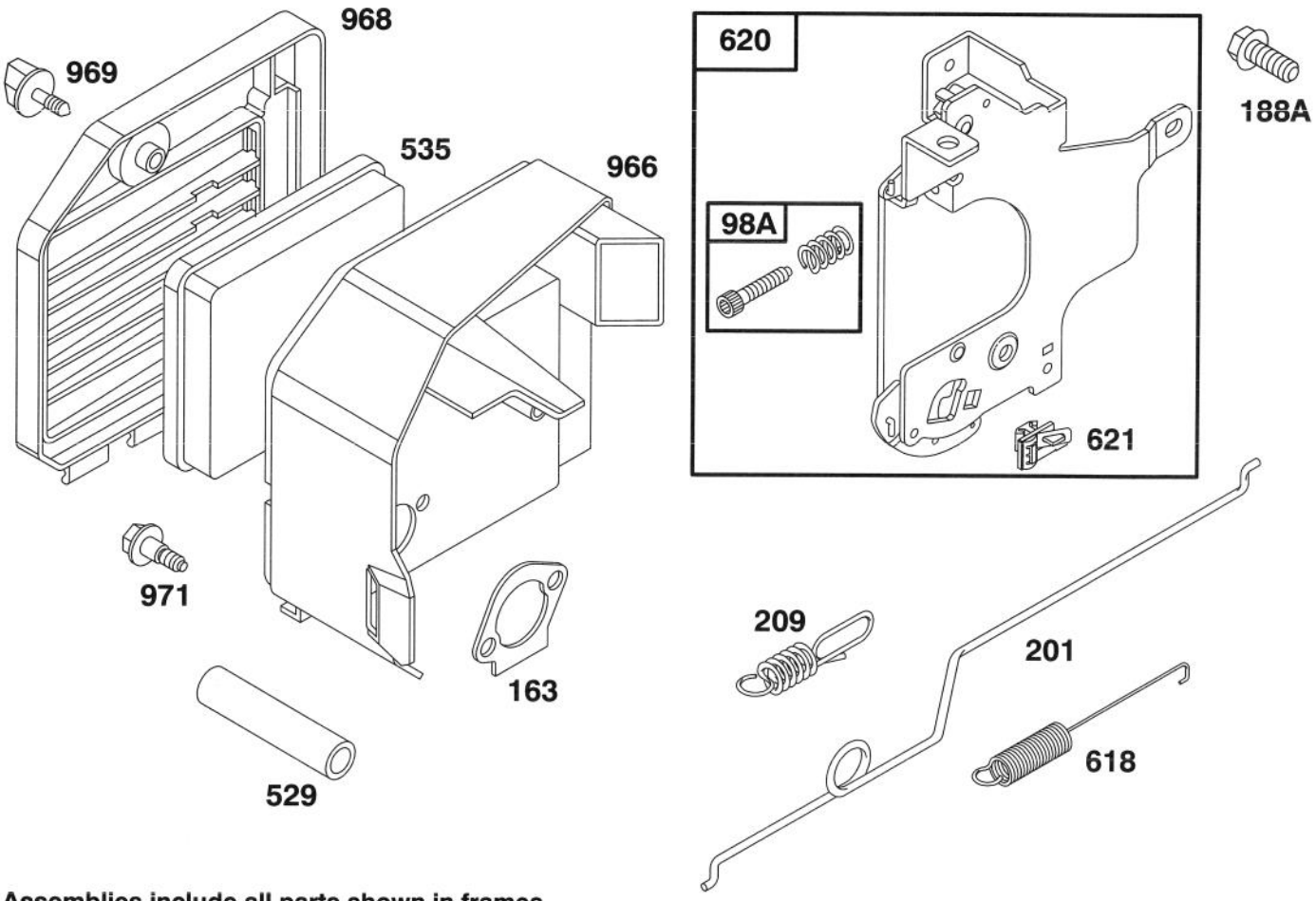

Assemblies include all parts shown in frames.

ENGINE GTS 150

Ref. No.	Part No.	Description	No. Used
98A	77–8020	Screw Assy – Speed Adj	1
*163	77–7960	Gasket – Air Cleaner	1
188A	77–9210	Screw – Hex Head	2
201	77–7980	Link – Governor	1
209	77–7990	Spring – Governor	1
529	77–8030	Tube – Breather	1
535	77–7950	Element – Filter	
		Note: 77–9010 Element – Paper (Optional)	1

Ref. No.	Part No.	Description	No. Used
618	77–8140	Spring – Choke	1
620	77–8000	Bracket – Carburetor	1
621	77–8010	Switch – Stop	1
966	77–7940	Base Air Cleaner	1
968	77–7040	Cover – Air Cleaner	1
969	77–7920	Screw – Air Cleaner	1
971	77–7930	Screw – Air Cleaner	3

* Included in Gasket Set–Part No. 77–8900

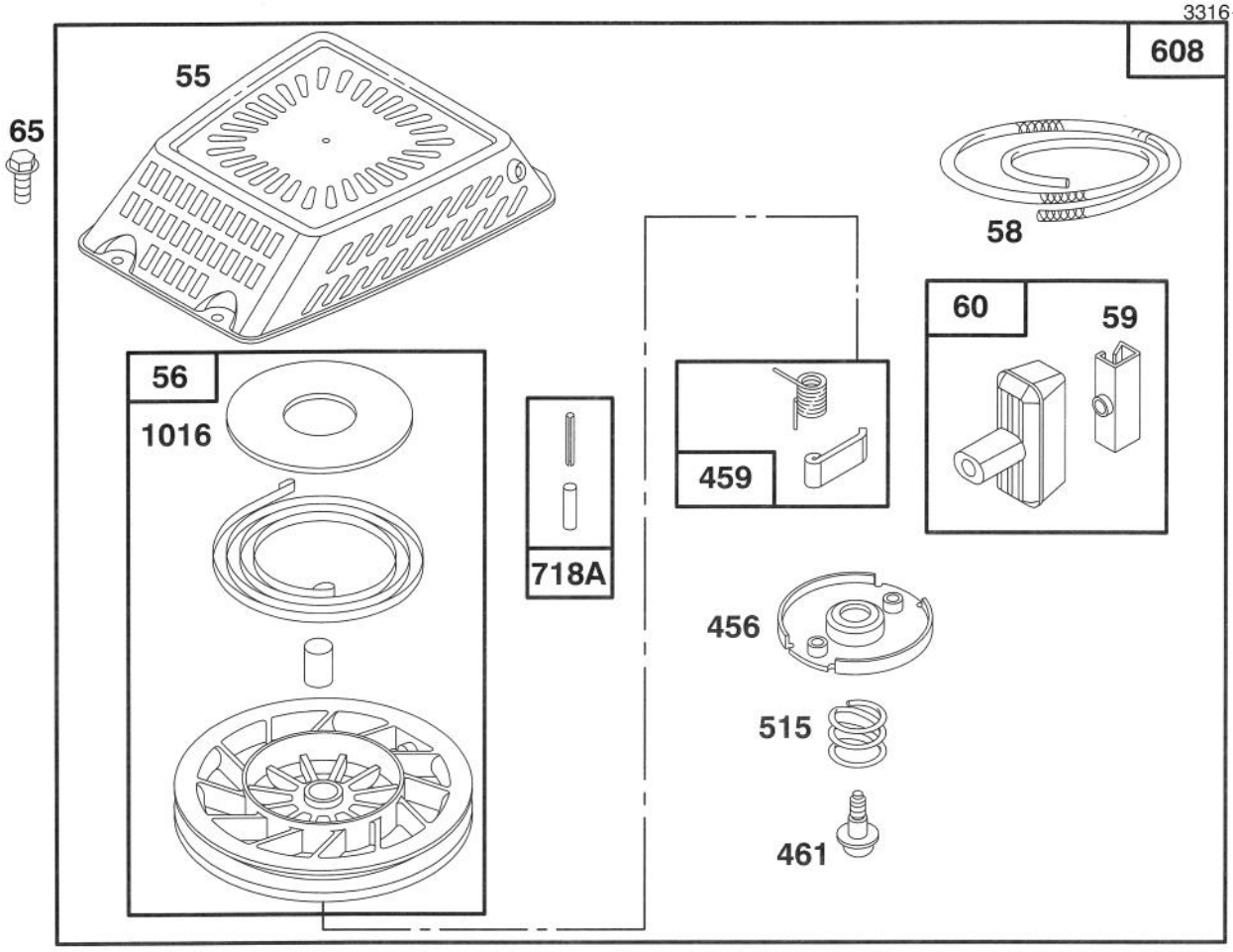

Assemblies include all parts shown in frames.

ENGINE GTS 150

Ref. No.	Part No.	Description	No. Used
55	77–8890	Housing – Rewind Starter	1
56	77–9270	Pulley – Rewind Starter	1
58	77–8480	Rope – Starter (Cut To Suit)	1
59	77–7210	Insert – Rewind Handle	1
60	77–8520	Handle – Rewind Starter	1
65	77–8300	Screw – Hex Head	4

Ref. No.	Part No.	Description	No. Used
456	77–8470	Retainer – Rewind Starter	1
459	77–8530	Pawl – Starter	2
461	77–8490	Screw – Rewind Starter	1
515	77–8500	Spring – Torsion	1
608	77–8840	Starter Assy – Rewind	1
718A	77–8550	Pin – Spring	1
1016	77–8570	Cover – Spring	1

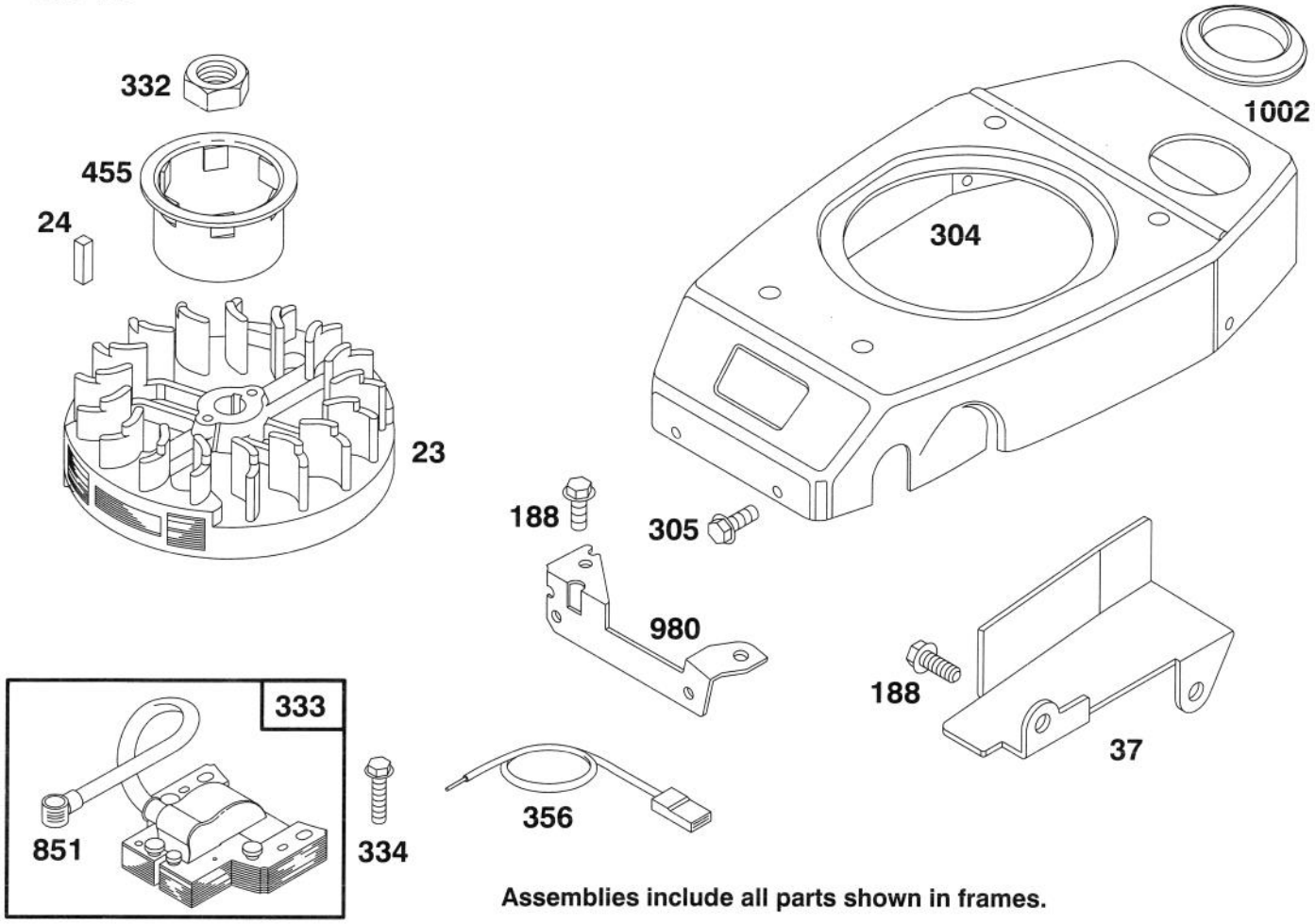

Assemblies include all parts shown in frames.

ENGINE GTS 150

Ref. No.	Part No.	Description	No. Used
23	77–8330	Flywheel – Magneto	1
24	77–8340	Key – Flywheel	1
37	77–7190	Guard – Flywheel	1
188	77–7450	Screw – Hex Head	2
304	77–8260	Housing – Blower	1
305	77–8310	Screw – Hex Head (blower hsg.)	4
332	77–8360	Nut – Flywheel	1

Ref. No.	Part No.	Description	No. Used
333	77–8420	Armature – Magneto	1
334	77–8440	Screw – Armature Mtg.	2
356	77–8400	Wire – Ground	1
455	77–8350	Cup – Starter	1
851	77–8430	Terminal – Spark Plug	1
980	77–7140	Bracket – Blower Housing	1
1002	77–7180	Grommet	1

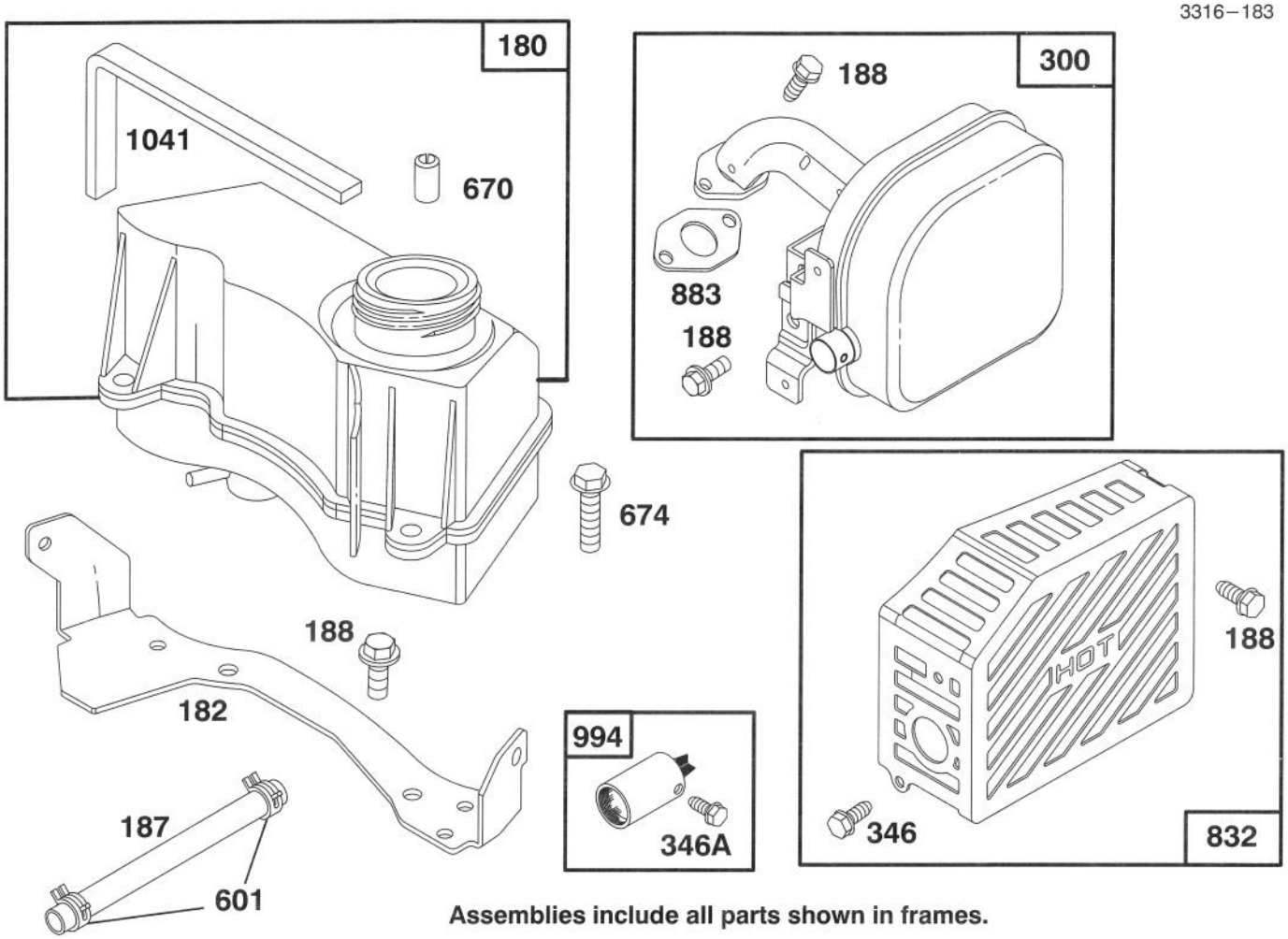

Assemblies include all parts shown in frames.

ENGINE GTS 150

Ref. No.	Part No.	Description	No. Used
180	77–8580	Tank Assy – Fuel	1
182	77–7170	Bracket – Fuel Tank	1
187	77–8620	Hose – Fuel (Cut To Suit)	1
188	77–7450	Screw – Hex Head	7
300	77–8640	Muffler – Exhaust	1
346	77–8650	Screw – Hex	2
346A	77–9050	Screw – Arrester Mtg.	1

Ref. No.	Part No.	Description	No. Used
601	77–8630	Clamp – Fuel Hose	2
670	77–9030	Spacer – Fuel Tank (includes 2)	1
674	77–8600	Screw – Tank Mtg	2
832	77–7290	Guard – Muffler	1
*883	77–7760	Gasket – Exhaust	1
994	77–9040	Arrester – Spark	1
*1041	77–8590	Seal – Foam	1

* Included in Gasket Set–Part No. 77–8900

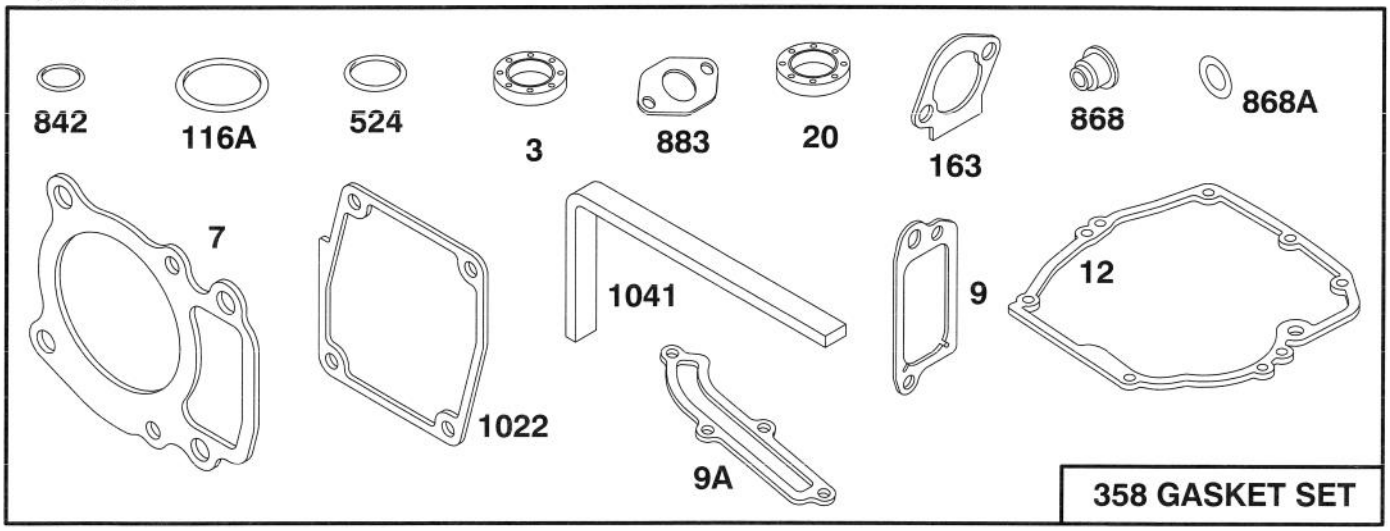

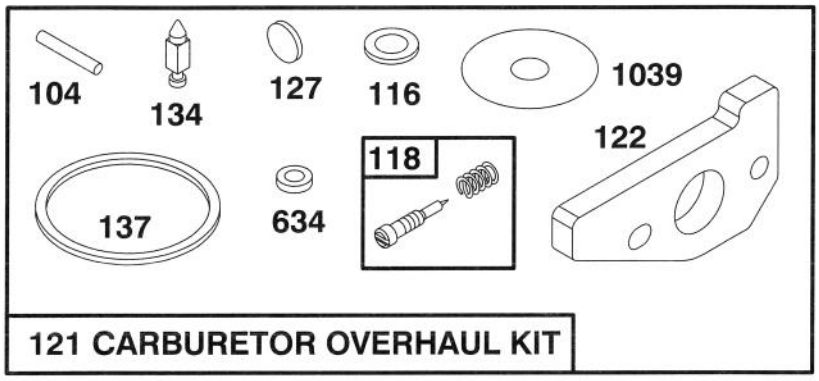

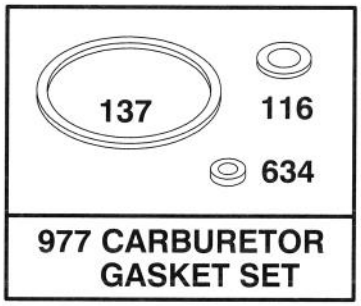

Assemblies include all parts shown in frames.

ENGINE GTS 150

Ref. No.	Part No.	Description	No. Used
*3	77–9060	Seal – Oil	1
*7	77–7740	Gasket – Cylinder Head	1
*9	77–9250	Gasket – Breather	1
*9A	77–7410	Gasket – Breather	1
*12	77–7550	Gasket – Engine Base	1
*20	77–7570	Seal – Oil	1
†104	77–8180	Pin – Float Hinge	1
††116	77–8210	Sealing – Gasket	1
*116A	77–7660	O–Ring	1
†118	77–8230	Valve & Spring – Needle	1
121	77–8920	Overhaul Kit – Carburetor	1
†122	77–7820	Adapter Assy.	1
†127	77–8100	Plug – Welch	1
†134	77–8110	Valve – Inlet (Includes Seat)	1

Ref. No.	Part No.	Description	No. Used
††137	77–8200	Gasket – Float Bowl	1
*163	77–7960	Gasket – Air Cleaner	1
358	77–8900	Gasket Set	1
*524	77–7270	Seal – O Ring	1
‡634	77–8150	Washer – Seal	2
*842	77–7300	Seal – O Ring	1
*868	77–7890	Seal Assy. – Valve	1
*868A	77–7900	Seal – Valve	1
*883	77–7760	Gasket – Exhaust	1
977	77–8930	Carburetor Gasket Set	1
*1022	77–7320	Gasket – Rocker Cover	1
†1039	77–7250	Limiter – Float	1
*1041	77–8590	Seal – Foam	1

* Included in Gasket Set–Part No. 77–8900 ‡ Included in Carburetor Gasket Kit–Part No. 77–8930
†Included in Carburetor Overhaul Kit–Part No. 77–8920

TORO PART NUMBER INDEX

Part No.	Description	Pg. No.	Ref. No.	Qty.
11715	Decal – Triangle	2	*	1
17367	Decal – Front	2	*	1
17738	Decal – Safety	2	*	1
18075	Decal – Specification	2	*	1
14–9949	Wheel & Tire Assembly	1	20	2
14–9959	Wheel Tire & Gear Assy.	4	31	2
16–1729	Control Panel Assembly	6	9	1
16–1769	Housing – 53cm	1	4	1
17–9426	Screw – Handle	7	1	2
19–4050	Knob – Handle Release	6	10	2
25–7740	Knob – Arm	4	3	2
25–7740	Knob – Arm	1	28	2
26–0670	Bolt – Blade	3	8	1
27–6231	Bolt – Wheel	1	22	2
27–6231	Bolt – Wheel	4	33	2
27–6250	Bushing – Wheel	1	21	4
27–6250	Bushing – Wheel	4	32	4
29–9570	Bushing – Yoke	4	38	1
36–4780	Washer – Thrust	4	44	1
36–4791	Washer – Thrust	5	48	2
38–7820	Bearing – Ball	5	60	1
40–1940	Washer – Wheel Bolt	1	23	4
46–5520	Lever – Traction	7	7	1
46–6432	Screw – Handle	7	9	1
46–8800	Lever – Control	7	5	1
48–2060	Bearing –Needle	4	21	2
49–2040	Screw – Self Tapping	4	8	8
52–7430	Control Bar Assembly	7	3	1
55–3570	Gas Cap Assembly	3	4	1
55–3760	Gear – Pinion 15T	5	49	1
55–3770	Gear – 49T (1st Gear)	5	58	1
55–3780	Gear – Pinion 20T	5	50	1
55–3790	Gear – 44T (2nd Gear)	5	57	1
55–3800	Gear – Pinion 25T	5	51	1
55–3810	Gear – 39T (3rd Gear)	5	56	1
60–8710	Case – Gear (Upper)	5	61	1
60–8730	Cover – Gear Case	5	46	1
60–8750	Bushing – Intrmdt. Shaft	5	47	2
60–8770	Bushing – Output Shaft	5	45	1
60–8790	Sleeve – Gear	5	55	1
60–8800	Shaft – Intermediate	5	52	1
60–8810	Retainer – Shift Fork	4	39	1
60–8840	Pulley – Half	4	10	2
60–8850	Bushing – Output Shaft	5	53	1
60–8870	Yoke – Shift	4	37	1
60–8890	Pinion – Bevel	5	59	1
62–3860	Decal – Danger	1	5	1
62–6660	Spacer	4	9	1
62–6673	Gear Case Assy. Complete	5	*	1
62–7540	Retainer – Blade	3	7	1
62–7550	Pulley – Engine	3	13	1
62–7700	Blade – 21	3	10	1
65–2720	Ring – Retaining	4	24	4
65–4710	Ring – Friction	4	25	2
65–4720	Spring – Compression	4	29	2
65–4730	Washer – Thrust (Inner)	4	22	2
65–4740	Washer – Thrust (Keyed)	4	23	4
65–4750	Pinion	4	28	2
65–4760	Washer –Clutch	4	26	2
65–4770	Shaft – Output	4	17	1
65–5042	Pivot Arm Assembly	4	2	2
65–5190	Bracket – Belt Guide	4	7	1
65–5200	Cover	3	12	1
65–5210	Screw – Thread Forming	1	7	2
65–5220	Screw – Cap Socket Hd.	1	26	2
65–5220	Screw – Socket Hd. Cap	4	36	2
65–5250	Clip – Spring	4	43	1
65–5440	Spring Arm Assembly	4	4	2
65–5660	Panel – Screen	1	2	1
66–0020	Panel – Vertical	1	1	1
66–0030	Bracket – Cable Support	3	5	1
66–0210	V–Belt	4	13	1
66–0236	Control – Throttle	6	4	1
66–0330	Support – Spacer	7	2	2
66–0360	Cap – End	4	5	2
66–0540	Arm – Spring Front	1	25	2
66–0560	Screw – Shoulder	1	19	2
66–0570	Guide – Belt	3	11	1
66–0580	Arm – Pivot	2	30	2
66–0620	Retainer – Belt	1	16	1
66–0680	Decal – French Regulation	1	13	1
66–1790	Decal – Danger	6	2	1
66–6040	Key – Rocking (R.H.)	4	*	1
66–6050	Key – Rocking (L.H.)	4	27	1
70–9760	Bushing – Sleeve	4	19	2
71–0620	Cable – Traction	7	10	1
71–0960	Support – Cable	7	8	1
71–7900	Cap – Hinge Bolt L.H.	1	10	1
71–7910	Cap – Hinge Bolt R.H.	1	6	1
71–8090	Mount – Handle L.H.	6	12	1
71–8100	Mount – Handle R.H.	6	11	1
71–8580	Spacer – Door	1	12	2
71–9470	Door – Bag	8	3	1
71–9480	Handle – Door	8	2	1
71–9640	Ramp – Discharge	1	27	1
71–9650	Access – Cover	1	14	1
71–9680	Bag – Grass 53cm	8	5	1
71–9690	Handle	6	5	1
71–9800	Door – Discharge	1	9	1
71–9840	Spring – Door	1	11	2
71–9870	Decal – Deck 53cm	2	29	1
71–9873	Decal – Panel	6	7	1
71–9877	Decal – Instruction	6	3	1
71–9920	Cover – Top	1	15	1
71–9930	Frame – Grass Bag	8	4	1
74–1660	Cover – Wheel	4	30	2
74–1671	Spacer – Wheel Cover	4	34	2
76–0760	Key – Shift	4	41	2
76–0770	Collar – Shift	4	42	1
76–0780	Sleeve – Shift Key	4	40	1
76–0920	Lever – Shift	4	16	1
76–2713	Control – Ground Speed	6	1	1
76–2930	Retainer – Cable	4	15	1
77–7040	Cover – Air Cleaner	12	968	1
77–7060	Cover – Valve	9	1023	1
77–7140	Bracket – Blower Housing	14	980	1
77–7170	Bracket – Fuel Tank	15	182	1
77–7180	Grommet	14	1002	1
77–7190	Guard – Flywheel	14	37	1
77–7210	Insert – Rewind Handle	13	59	1
77–7240	Bowl – Fuel	11	136	1
77–7250	Limiter – Float	16	1039	1
77–7250	Limiter – Float	11	1039	1
77–7260	Dipstick – Oil	10	523	1
77–7270	Seal – O Ring	10	*524	1
77–7270	Seal – O Ring	16	*524	1
77–7280	Tube – Oil Filler	10	525	1
77–7290	Guard – Muffler	15	832	1
77–7300	Seal – O Ring	10	*842	1
77–7300	Seal – O Ring	16	*842	1
77–7320	Gasket – Rocker Cover	16	*1022	1
77–7320	Gasket – Rocker Cover	9	*1022	1

*Not Illustrated

TORO PART NUMBER INDEX (Cont.)

Part No.	Description	Pg. Ref. No.	Ref. No.	Qty.
77-7330	Plug – Spark	9	337	1
77-7340	Elbow – Spark Plug	9	635	1
77-7350	Tube – Breather	9	11	1
77-7360	Screw – Hex Head	9	10	4
77-7370	Lever Assy – Governor	10	227	1
77-7380	Bolt – Governor Lever	10	562	1
77-7390	Nut – Hex	10	592	1
77-7400	Cover – Breather	9	572	1
77-7410	Gasket – Breather	16	*9A	1
77-7410	Gasket – Breather	9	*9A	1
77-7420	Screw – Cover Mtg	9	307	4
77-7450	Screw – Hex Head	10	188	5
77-7450	Screw – Hex Head	14	188	2
77-7450	Screw – Hex Head	15	188	7
77-7460	Crank – Governor	10	616	1
77-7470	Washer	10	230	1
77-7480	Pushnut	10	615	1
77-7490	Gear – Cam	10	46	1
77-7500	Gear – Governor	10	219	1
77-7520	Crankshaft	10	16	1
77-7530	Gear – Timing	10	741	1
77-7550	Gasket – Engine Base	10	*12	1
77-7550	Gasket – Engine Base	16	*12	1
77-7560	Base – Engine	10	18	1
77-7570	Seal – Oil	10	*20	1
77-7570	Seal – Oil	16	*20	1
77-7590	Cylinder Assy	9	1	1
77-7600	Pin – Cylinder	9	718	2
77-7610	Tappet – Valve	9	45	2
77-7620	Rod – Push	9	1026	2
77-7630	Screw – Cylinder Head	9	13	4
77-7640	Pump – Oil	10	1024	1
77-7650	Cover – Oil Pump	10	979	1
77-7660	O-Ring	10	*116A	1
77-7660	O-Ring	16	*116A	1
77-7670	Rod – Connecting	10	29	1
77-7680	Screw – Connecting Rod	10	32	2
77-7690	Piston Assy (Std)	10	25	1
77-7700	Ring Set (Std)	10	26	1
77-7710	Lock – Piston Pin	10	27	2
77-7720	Pin Assy – Piston	10	28	1
77-7730	Head – Cylinder	9	5	1
77-7740	Gasket – Cylinder Head	16	*7	1
77-7740	Gasket – Cylinder Head	9	*7	1
77-7760	Gasket – Exhaust	16	*883	1
77-7760	Gasket – Exhaust	15	*883	1
77-7760	Gasket – Exhaust	9	*883	1
77-7770	Guide – Push Rod	9	1034	1
77-7780	Stud – Rocker Arm	9	166	2
77-7790	Arm – Rocker	9	1029	2
77-7800	Cap – Valve	9	238	2
77-7810	Spring – Valve	9	35	2
77-7820	Adapter Assy	11	122	1
77-7820	Adapter Assy	9	122	1
77-7820	Adapter Assy.	16	122	1
77-7850	Bushing – Guide	9	871	1
77-7860	Valve – Exhaust	9	33	1
77-7870	Retainer – Spring	9	40	2
77-7880	Valve – Intake	9	34	1
77-7890	Seal Assy – Valve	9	*868	1
77-7890	Seal Assy. – Valve	16	*868	1
77-7900	Gasket – Valve	9	*868A	1
77-7900	Seal – Valve	16	*868A	1
77-7910	Ball & Screw – Rocker	9	192	2
77-7920	Screw – Air Cleaner	12	969	1
77-7930	Screw – Air Cleaner	12	971	3
77-7940	Base Air Cleaner	12	966	1
77-7950	Element – Filter	12	535	1
77-7960	Gasket – Air Cleaner	12	*163	1
77-7960	Gasket – Air Cleaner	16	*163	1
77-7970	Screw – Hex Head	11	124	2
77-7980	Link – Governor	12	201	1
77-7990	Spring – Governor	12	209	1
77-8000	Bracket – Carburetor	12	620	1
77-8010	Switch – Stop	12	621	1
77-8020	Screw Assy – Speed Adj	12	98A	1
77-8030	Tube – Breather	12	529	1
77-8040	Tube – Vent	11	1011	1
77-8050	Carburetor Assy	11	125	1
77-8070	Valve – Choke	11	108	1
77-8080	Valve – Throttle	11	130	1
77-8090	Screw – Valve Mtg	11	95	1
77-8100	Plug – Welch	11	127	1
77-8100	Plug – Welch	16	127	1
77-8110	Valve – Inlet	11	134	1
77-8110	Valve – Inlet	16	134	1
77-8120	Adapter – Jet	11	147	1
77-8130	Shaft – Choke	11	141	1
77-8140	Spring – Choke	12	618	1
77-8150	Washer – Seal	11	634	2
77-8150	Washer – Seal	16	634	2
77-8160	Shaft – Throttle	11	131	1
77-8170	Float – Carburetor	11	133	1
77-8180	Pin – Float Hinge	11	104	1
77-8180	Pin – Float Hinge	16	104	1
77-8190	Bowl Assy – Carburetor	11	975	1
77-8200	Gasket – Float Bowl	11	137	1
77-8200	Gasket – Float Bowl	16	137	1
77-8210	Sealing – Gasket	16	116	1
77-8210	Sealing – Gasket	11	116	1
77-8220	Screw – Hex Head	11	955	1
77-8230	Valve & Spring – Needle	11	118	
77-8230	Valve & Spring – Needle	16	118	1
77-8240	Screw – Idle Adj	11	98	1
77-8260	Housing – Blower	14	304	1
77-8300	Screw – Hex Head	13	65	4
77-8310	Screw – Hex Head	10	305	2
77-8310	Screw – Hex Head	14	305	4
77-8330	Flywheel – Magneto	14	23	1
77-8340	Key – Flywheel	14	24	1
77-8350	Cup – Starter	14	455	1
77-8360	Nut – Flywheel	14	332	1
77-8400	Wire – Ground	14	356	1
77-8420	Armature – Magneto	14	333	1
77-8430	Terminal – Spark Plug	14	851	1
77-8440	Screw – Armature Mtg.	14	334	2
77-8470	Retainer – Rewind Starter	13	456	1
77-8480	Rope – Starter	13	58	1
77-8490	Screw – Rewind Starter	13	461	1
77-8500	Spring – Torsion	13	515	1
77-8520	Handle – Rewind Starter	13	60	1
77-8530	Pawl – Starter	13	459	2
77-8550	Pin – Spring	13	718A	1
77-8570	Cover – Spring	13	1016	1
77-8580	Tank Assy – Fuel	15	180	1
77-8590	Seal – Foam	15	*1041	1
77-8590	Seal – Foam	16	*1041	1
77-8600	Screw – Tank Mtg	15	674	2
77-8620	Hose – Fuel	15	187	1
77-8630	Clamp – Fuel Hose	15	601	2
77-8640	Muffler – Exhaust	15	300	1
77-8650	Screw – Hex	15	346	2

*Not Illustrated

TORO PART NUMBER INDEX (Cont.)

Part No.	Description	Pg. No.	Ref. No.	Qty.
77–8840	Starter Assy – Rewind	13	608	1
77–8890	Housing – Rewind Starter	13	55	1
77–8900	Gasket Set	16	358	1
77–8920	Overhaul Kit – Carburetor	16	121	1
77–8930	Carburetor Gasket Set	16	977	1
77–9020	Short Block	9		1
77–9030	Spacer – Fuel Tank	15	670	1
77–9040	Arrester – Spark	15	994	1
77–9050	Screw – Arrester Mtg.	15	346A	1
77–9060	Seal – Oil	16	*3	1
77–9060	Seal – Oil	9	*3	1
77–9070	Screw– Engine Base	10	22	7
77–9090	Screw – Set	9	192A	1
77–9200	Screw – Hex Head	9	10A	2
77–9210	Screw – Hex Head	12	188A	2
77–9240	Plug – Pipe	10	15	1
77–9250	Gasket – Breather	16	*9	1
77–9250	Gasket – Breather	9	*9	1
77–9260	Breather Assy	9	8	1
77–9270	Pulley – Rewind Starter	13	56	1
80–4800	Decal – Recoil	3	3	1
86–7990	Screw – Clamp	3	16	1
92–2289	Plate – TORO Logo	3	2	1
92–6528	Engine	3	1	1
2210–249	Clamp – Throttle	3	15	1
237–153	Seal – ORing	4	18	2
302–56	Fitting – Grease	4	20	2
321–3	Screw – Cap Hex. Hd.	7	6	1
322–29	Screw – Hex Hd. Cap	1	8	2
3253–22	Washer – Blade	3	9	1
3256–22	Washer – Flat	7	11	1
3256–23	Washer – Flat	7	13	2
3256–24	Washer – Flat	4	12	1
3256–24	Washer – Flat	1	17	1
3272–5	Pin – Cotter	4	14	1
3290–378	Tie – Cable	6	6	5
3296–5	Nut – Lock	4	11	1
3296–6	Nut – Lock	1	24	4
3296–6	Nut – Lock	4	35	2
3296–42	Nut – Lock	7	4	2
3296–58	Nut – Lock	7	12	2
32104–76	Screw – Self Tapping	6	8	5
32121–120	Pin – Coil	5	54	1
32144–15	Screw – Hex Flange Hd.	1	18	1
32144–70	Screw – Cap Hex. Hd.	1	3	6
32144–70	Screw – Hex Hd. Cap	3	6	7
32144–70	Screw – Hex. Washer Hd.	4	1	5
32144–102	Screw – Thread Forming	3	14	3
32144–111	Screw – Index Hex Washer	8	1	5

OPTIONAL EQUIPMENT

Leaf Shredder Kit ..... Model No. 59180
Dethatcher Kit ..... Model No. 59131
Spark Arrestor Kit ..... Part No. 77–9040

Litho in U.S.A.

*Not Illustrated

PRODUCT CHANGES

In an effort to make improvements available to TORO owners as quickly as possible, minor changes are incorporated into Toro's products from time to time that do not become immediately shown in the Parts Catalog. If such a change has been made in your unit, which is not reflected in your manual, see your TORO Distributor or his Authorized TORO Service Dealer for information and part numbers.

COUNTRIES OTHER THAN THE UNITED STATES OR CANADA

Customers who have purchased TORO products exported from the United States or Canada should contact their Toro Distributor (Dealer) to obtain guarantee policies for your country, province or state. If for any reason you are dissatisfied with your Distributor's service or have difficulty obtaining guarantee information, contact the TORO importer. If all other remedies fail, you may contact us at The Toro Company.

MAINTENANCE RECORD

Date								

Compliance with Radio Interference Regulations Certified.
Certifie Conforme au Reglement sur le Brouillage Radioelectrique.

Litho in U.S.A.