FORM NO. 3316–185

TORO®

MODEL NO. 26635B–3900001 & UP
MODEL NO. 26635BG–3900001 & UP

PARTS CATALOG

53cm KEY–LECTRIC®
Rear Bagging Mower

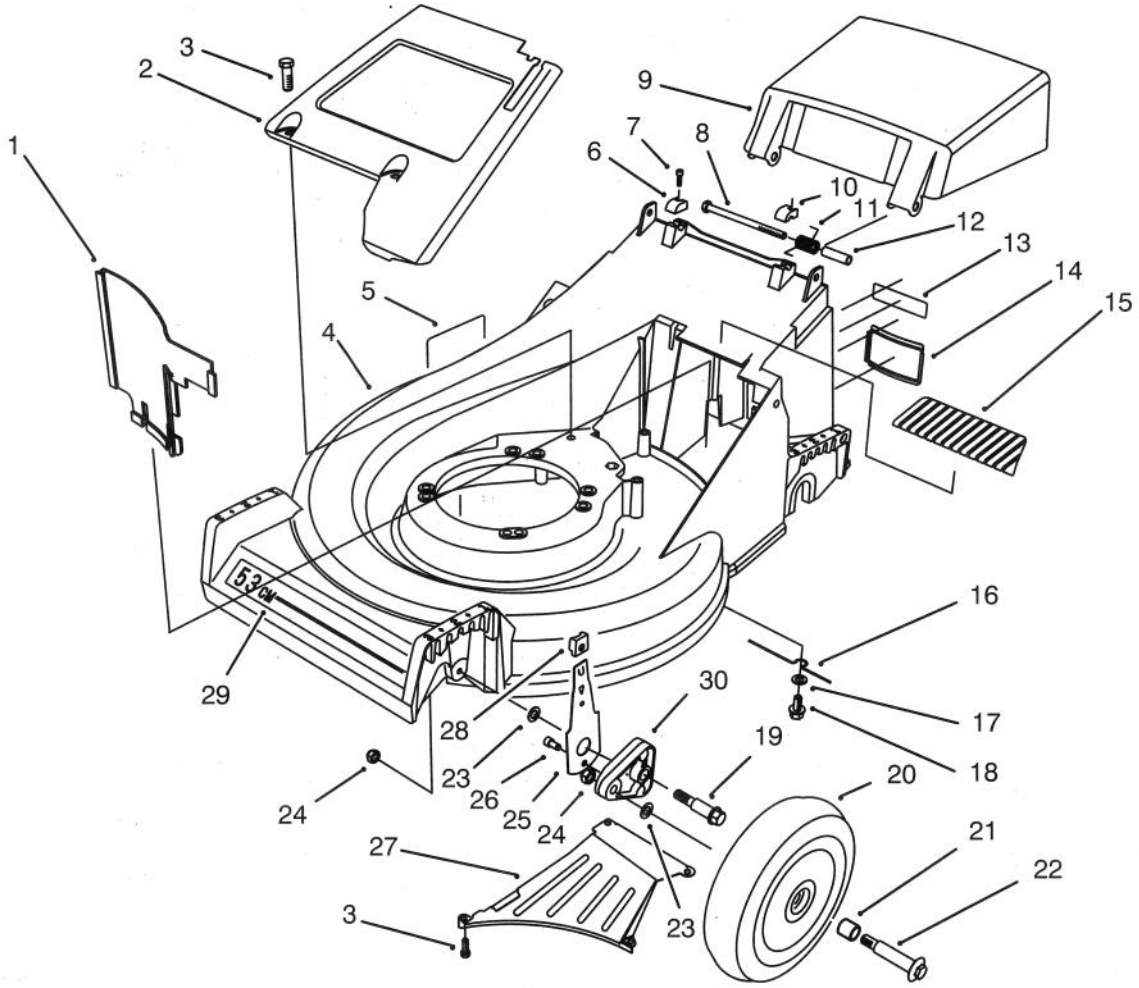

HOUSING ASSEMBLY

Ref. No.	Part No.	Description	No. Used
1	66–0020	Panel – Vertical	1
2	65–5660	Panel – Screen	1
3	32144–70	Screw – Cap Hex. Hd.	6
4	16–1769	Housing – 53cm (Incl. Ref. #5 & 29)	1
5	62–3860	Decal – Danger	1
6	71–7910	Cap – Hinge Bolt R.H.	1
7	65–5210	Screw – Thread Forming	2
8	322–29	Screw – Hex Hd. Cap	2
9	71–9800	Door – Discharge	1
10	71–7900	Cap – Hinge Bolt L.H.	1
11	71–9840	Spring – Door	2
12	71–8580	Spacer – Door	2
13	66–0680	Decal – French Regulation	1
14	71–9650	Access – Cover	1

Ref. No.	Part No.	Description	No. Used
15	71–9920	Cover – Top	1
16	66–0620	Retainer – Belt	1
17	3256–24	Washer – Flat	1
18	32144–15	Screw – Hex Flange Hd.	1
19	66–0560	Screw – Shoulder	2
20	14–9949	Wheel & Tire Assembly (Incl. Ref. #21)	2
21	27–6250	Bushing – Wheel	4
22	27–6231	Bolt – Wheel	2
23	40–1940	Washer – Wheel Bolt	4
24	3296–6	Nut – Lock	4
25	66–0540	Arm – Spring Front	2
26	65–5220	Screw – Cap Socket Hd.	2
27	71–9640	Ramp – Discharge	1
28	25–7740	Knob – Arm	2

© The TORO Company –1993
All Rights Reserved

3316–185

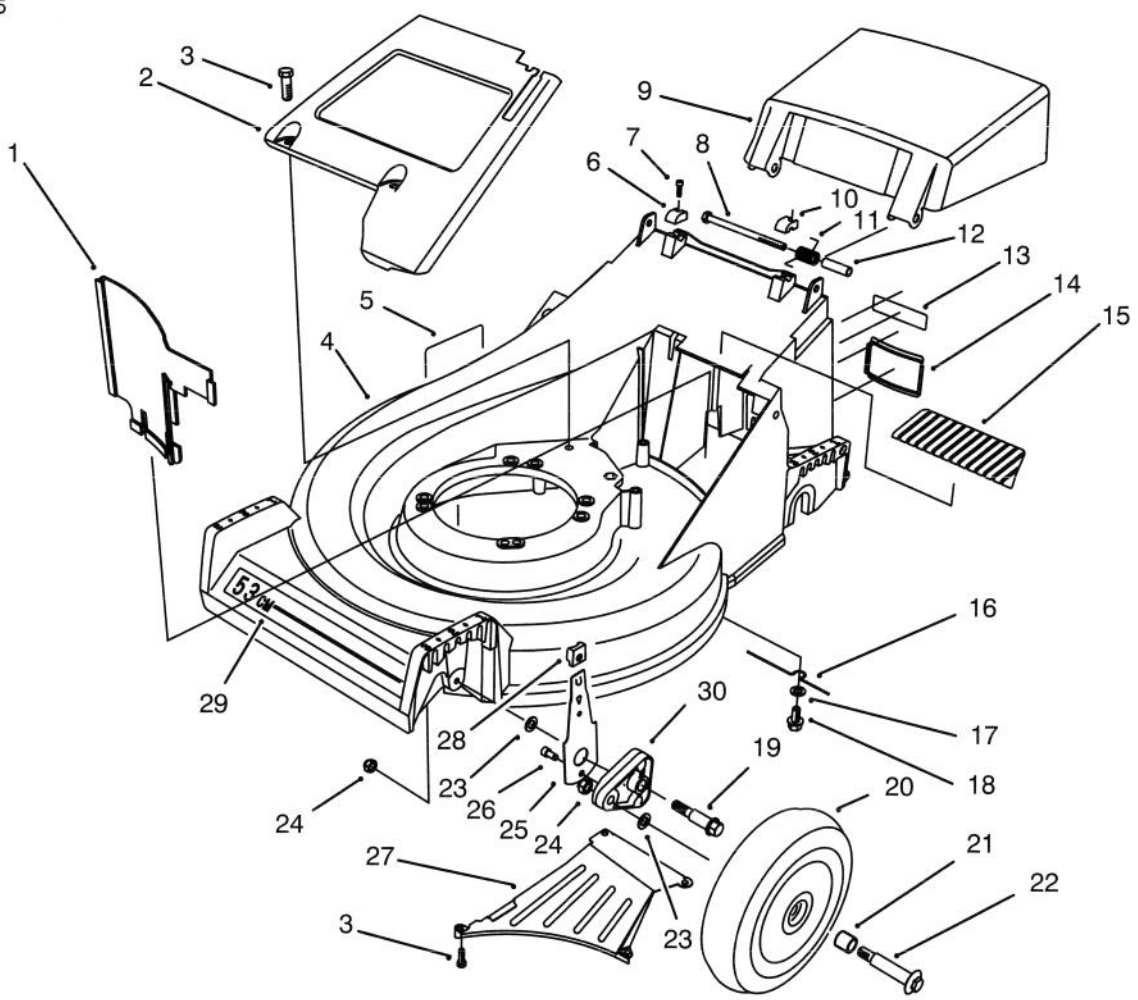

C–1568

HOUSING ASSEMBLY (Continued)

Ref. No.	Part No.	Description	No. Used
29	71–9870	Decal – Deck 53cm (Model No. 26635B Only)	1
30	66–0580	Arm – Pivot	2
*	17368	Decal – Front (Model No. 26635BG Only)	1
*	11715	Decal – Triangle (Model No. 26635BG Only)	1

Ref. No.	Part No.	Description	No. Used
*	17738	Decal – Safety (Model No. 26635BG Only)	1
*	18076	Decal – Specification (Model No. 26635BG Only)	1

*Not Illustrated

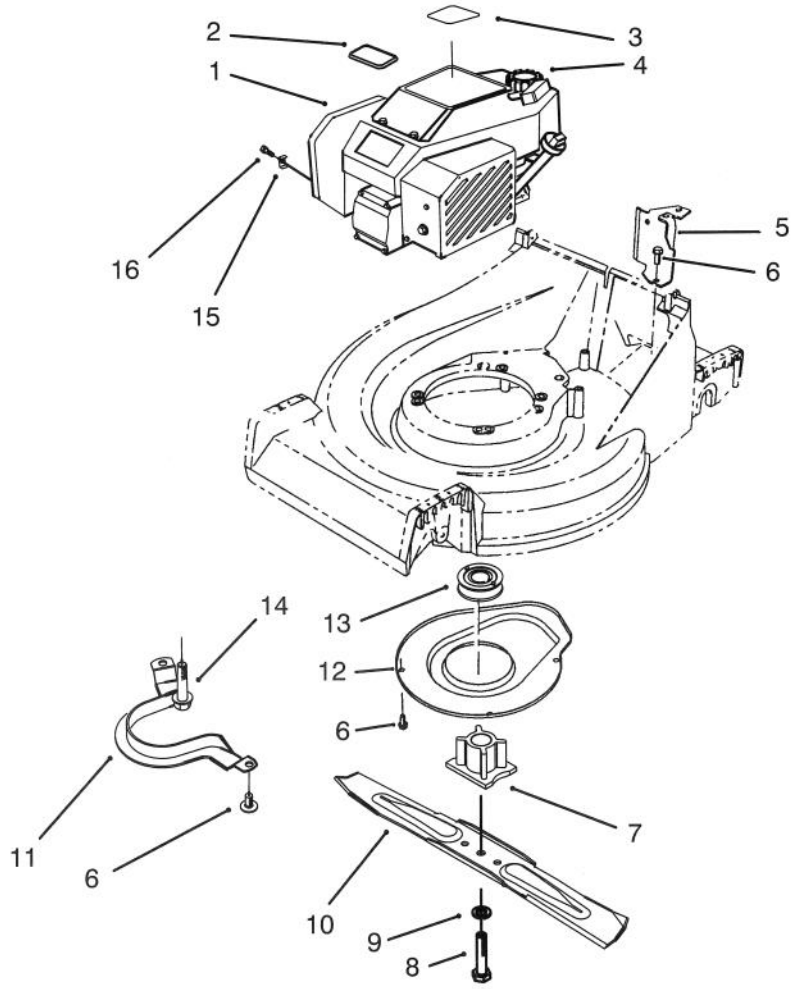

C–1566

ENGINE ASSEMBLY

Ref. No.	Part No.	Description	No. Used
1	77–8950	Engine – OHV	1
2	92–2289	Plate – TORO Logo	1
3	80–4800	Decal – Recoil	1
4	55–3570	Gas Cap Assembly	1
5	66–0030	Bracket – Cable Support	1
6	32144–70	Screw – Hex Hd. Cap	7
7	62–7540	Retainer – Blade	1
8	26–0670	Bolt – Blade	1
9	3253–22	Washer – Blade	1
10	62–7700	Blade – 21"	1
11	66–0570	Guide – Belt	1
12	65–5200	Cover	1
13	62–7550	Pulley – Engine	1
14	32144–102	Screw – Hex Hd. Cap	3
15	2210–249	Clamp – Casing	1
16	86–7990	Screw – Clamp	1

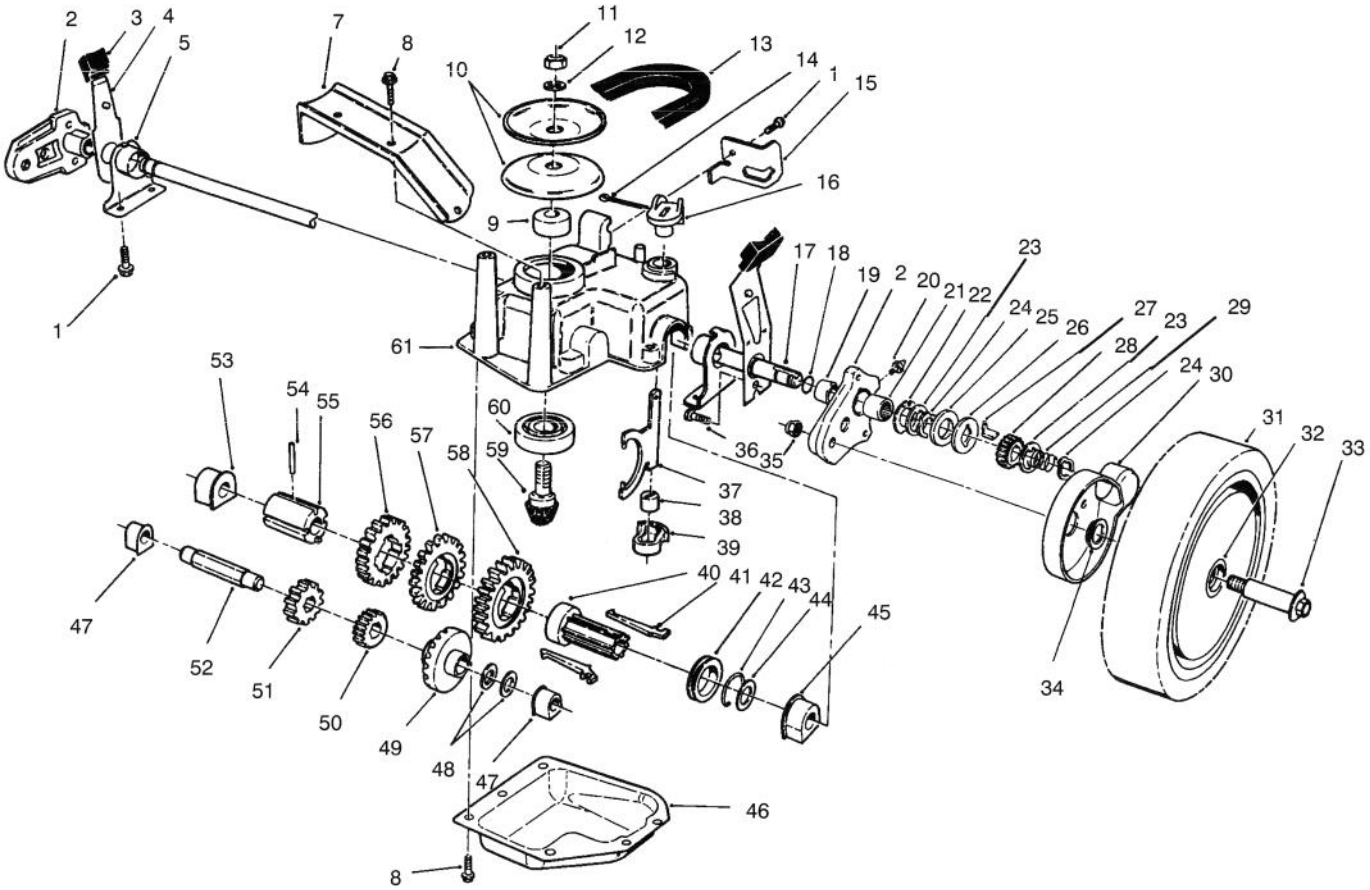

C–1555

GEAR CASE ASSEMBLY

Ref. No.	Part No.	Description	No. Used
1	32144–70	Screw – Hex. Washer Hd.	3
2	65–5042	Pivot Arm Assembly (Incl. Ref. #19–21)	2
3	25–7740	Knob – Arm	2
4	65–5440	Spring Arm Assembly	2
5	66–0360	Cap – End	2
7	65–5190	Bracket – Belt Guide	1
8	49–2040	Screw – Self Tapping	8
9	62–6660	Spacer	1
10	60–8840	Pulley – Half	2
11	3296–5	Nut – Lock	1
12	3256–24	Washer – Flat	1
13	66–0210	V–Belt	1
14	3272–5	Pin – Cotter	1
15	76–2930	Retainer – Cable	1
16	76–0920	Lever – Shift	1
17	65–4770	Shaft – Output	1
18	237–153	Seal – "O"Ring	2
19	70–9760	Bushing – Sleeve	2
20	302–56	Fitting – Grease	2
21	48–2060	Bearing –Needle	2
22	65–4730	Washer – Thrust (Inner)	2
23	65–4740	Washer – Thrust (Keyed)	4

Ref. No.	Part No.	Description	No. Used
24	65–2720	Ring – Retaining	4
25	65–4710	Ring – Friction	2
26	65–4760	Washer –Clutch	2
27	66–6050	Key – Rocking (L.H.)	1
*	66–6040	Key – Rocking (R.H.)	1
28	65–4750	Pinion	2
29	65–4720	Spring – Compression	2
30	74–1660	Cover – Wheel	2
31	14–9959	Wheel Tire & Gear Assy. (Incl. Ref. #32)	2
32	27–6250	Bushing – Wheel	4
33	27–6231	Bolt – Wheel	2
34	74–1671	Spacer – Wheel Cover	2
35	3296–6	Nut – Lock	2
36	65–5220	Screw – Socket Hd. Cap	2
37	60–8870	Yoke – Shift	1
38	29–9570	Bushing – Yoke	1
39	60–8810	Retainer – Shift Fork	1
40	76–0780	Sleeve – Shift Key	1
41	76–0760	Key – Shift	2
42	76–0770	Collar – Shift	1
43	65–5250	Clip – Spring	1
44	36–4780	Washer – Thrust	1

*Not Illustrated

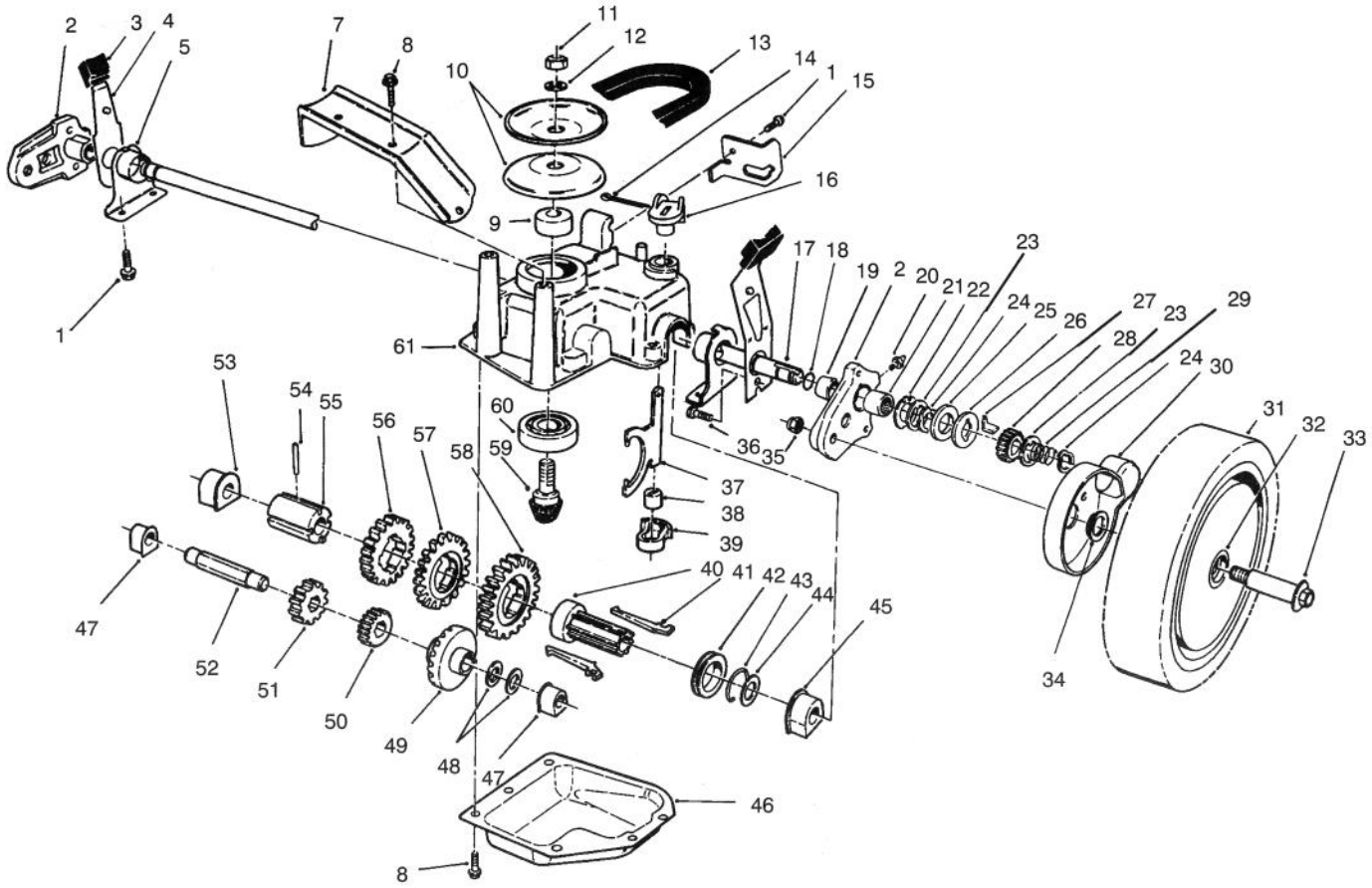

C–1555

GEAR CASE ASSEMBLY (Continued)

Ref. No.	Part No.	Description	No. Used
45	60–8770	Bushing – Output Shaft	1
46	60–8730	Cover – Gear Case	1
47	60–8750	Bushing – Intrmdt. Shaft	2
48	36–4791	Washer – Thrust	2
49	55–3760	Gear – Pinion 15T	1
50	55–3780	Gear – Pinion 20T	1
51	55–3800	Gear – Pinion 25T	1
52	60–8800	Shaft – Intermediate	1
53	60–8850	Bushing – Output Shaft	1

Ref. No.	Part No.	Description	No. Used
54	32121–120	Pin – Coil	1
55	60–8790	Sleeve – Gear	1
56	55–3810	Gear – 39T (3rd Gear)	1
57	55–3790	Gear – 44T (2nd Gear)	1
58	55–3770	Gear – 49T (1st Gear)	1
59	60–8890	Pinion – Bevel	1
60	38–7820	Bearing – Ball	1
61	60–8710	Case – Gear (Upper)	1
*	62–6673	Gear Case Assy. Complete	1

*Not Illustrated

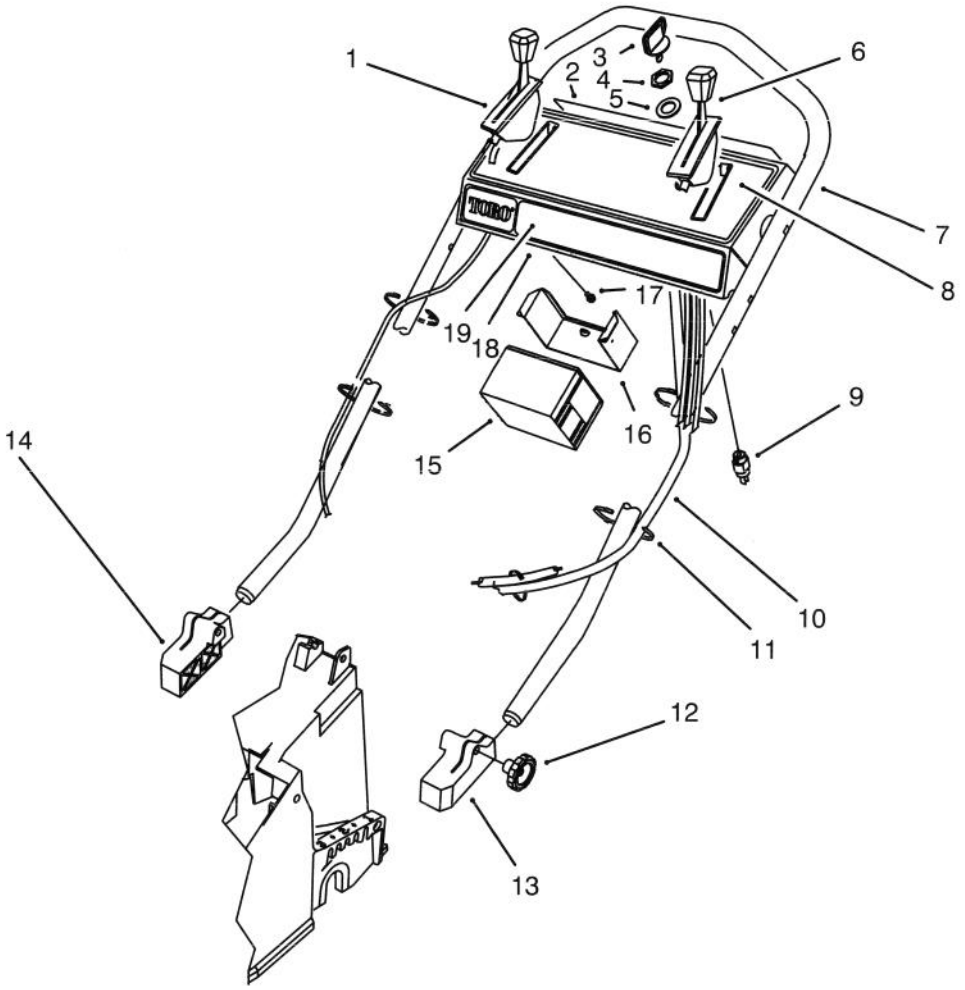

C–1583

HANDLE ASSEMBLY

Ref. No.	Part No.	Description	No. Used
1	76–2713	Control – Ground Speed	1
2	66–1790	Decal – Danger	
3	63–8360	Key – Ignition	1
4	218–461	Nut – Lock	1
5	3254–5	Washer – Lock	1
6	66–0236	Control – Throttle Bend Type #3 Sheath Lg. 57" (145cm) Wire Lg. 2–3/8" (6cm)	1
7	71–9690	Handle	1
8	71–9875	Decal – Instruction	1
9	46–5780	Switch – Starter (Incl. Ref. #4 & 5)	1

Ref. No.	Part No.	Description	No. Used
10	80–4791	Harness – Wire	1
11	3290–378	Tie – Cable	5
12	19–4050	Knob – Handle Release	2
13	71–8090	Mount – Handle L.H.	1
14	71–8100	Mount – Handle R.H.	1
15	63–8570	Battery	1
16	63–8480	Retainer – Battery	1
17	32104–76	Screw – Self Tapping	5
18	16–1739	Panel – Control (Incl. Ref. #2, 8 & 19)	1
19	71–9871	Decal – TORO	1
*	22–4710	Charger – Battery (220V)	1

*Not Illustrated

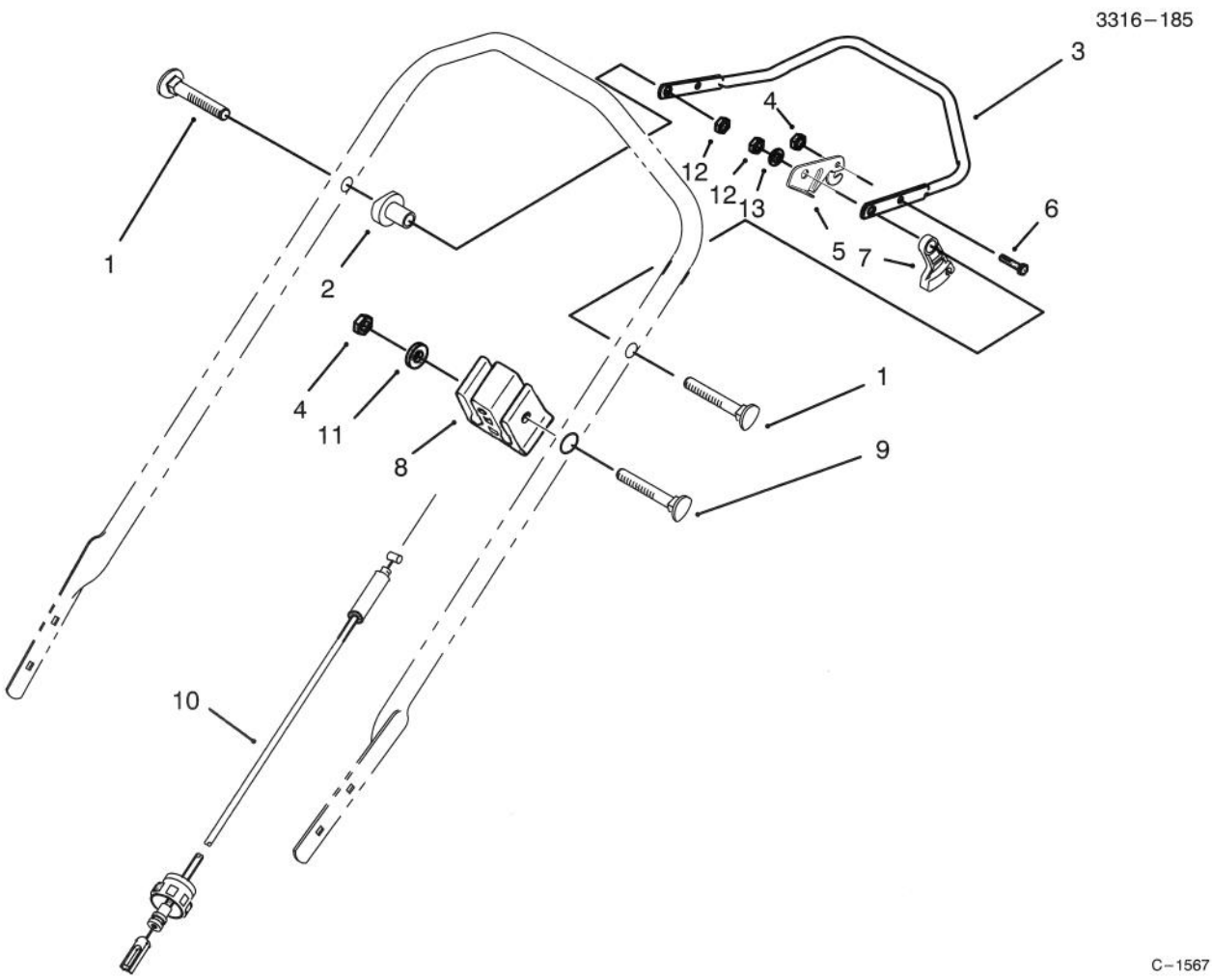

TRACTION CONTROL ASSEMBLY

Ref. No.	Part No.	Description	No. Used
1	17–9426	Screw – Handle	2
2	66–0330	Support – Spacer	2
3	52–7430	Control Bar Assembly	1
4	3296–42	Nut – Lock	2
5	46–8800	Lever – Control	1
6	321–3	Screw – Hex. Hd. Cap	1
7	46–5520	Lever – Traction	1

Ref. No.	Part No.	Description	No. Used
8	71–0960	Support – Cable	1
9	46–6432	Screw – Handle	1
10	71–0620	Cable – Traction	1
11	3256–22	Washer – Flat	1
12	3296–58	Nut – Lock	2
13	3256–23	Washer – Flat	2

ENGINE GTS–150

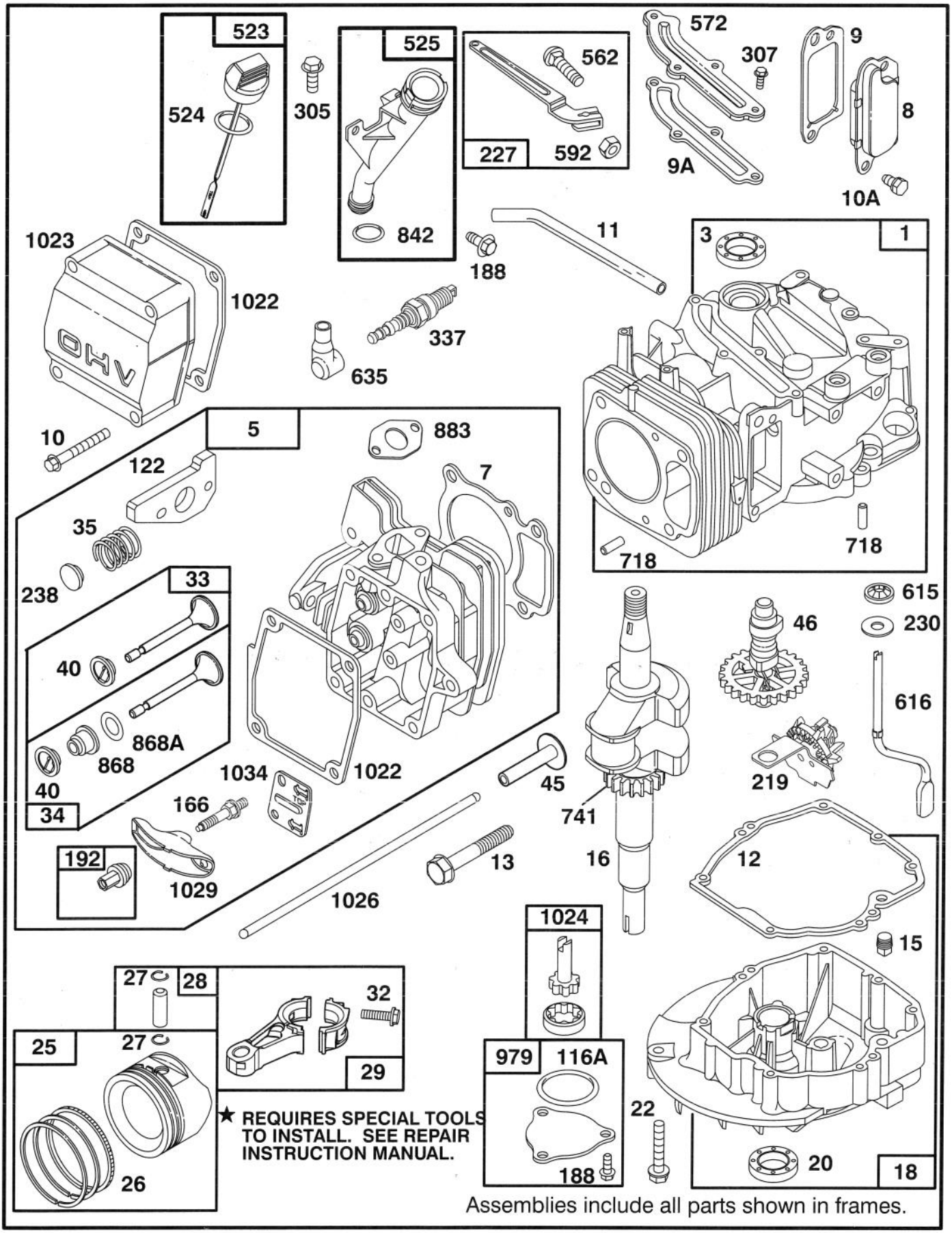

Assemblies include all parts shown in frames.

ENGINE GTS–150

Ref. No.	Part No.	Description	No. Used
1	77–7590	Cylinder Assy.	1
*3	77–9060	Seal – Oil	1
5	77–7730	Head – Cylinder	1
*7	77–7740	Gasket – Cylinder Head	1
8	77–9260	Breather Valve	1
*9	77–9250	Gasket – Breather	1
*9A	77–7410	Gasket – Breather	1
10	77–7360	Screw – Hex. Head (valve cover)	4
10A	77–9200	Screw – Hex Hd.	2
11	77–7350	Tube – Breather	1
*12	77–7550	Gasket – Engine Base	1
13	77–7630	Screw – Cylinder Head	4
15	77–9240	Plug – Pipe	1
16	77–7520	Crankshaft Note: Order Part No. 77–7540 For Timing Gear Key	1
18	77–7560	Base – Engine	1
*20	77–7570	Seal – Oil	1
22	77–9070	Screw – Engine Base Note: Order Part No. 77–9080 For Hole Nearest Breather	7
25	77–7690	Piston Assy. (Std.)	1
26	77–7700	Ring Set (Std.)	1
27	77–7710	Lock – Piston Pin	2
28	77–7720	Pin – Piston (STD)	1
29	77–7670	Rod – Connecting	1
32	77–7680	Screw – Connecting Rod	2
33	77–7860	Valve – Exhaust	1
34	77–7880	Valve – Intake	1
35	77–7810	Spring – Valve	2
40	77–7870	Retainer – Spring	2
45	77–7610	Tappet – Valve	2
46	77–7490	Gear – Cam	1
*116A	77–7660	Seal – O Ring	1
†122	77–7820	Adapter Assy.	1
166	77–7780	Stud – Rocker Arm	2
188	77–7450	Screw – Sem (Breather Mounting, pump cover)	5
192	77–7910	Nut – Hex Special	2
219	77–7500	Gear – Governor	1
227	77–7370	Lever – Governor	1
230	77–7470	Washer – Thrust	1
238	77–7800	Cap – Valve	2
305	77–8310	Screw – Hex. Head	2
307	77–7420	Screw – Sem (Breather Cover)	4
337	77–7330	Plug – Spark	1
523	77–7260	Dipstick – Oil	1
*524	77–7270	Seal – Intake Elbow	1
525	77–7280	Tube – Oil Filler	1
562	77–7380	Bolt – Governor Lever	1
572	77–7400	Baffle – Cylinder	1
592	77–7390	Nut – Hex.	1
615	77–7480	Push Nut	1
616	77–7460	Crank – Governor	1
635	77–7340	Elbow – Spark Plug	1
718	77–7600	Dowel – Sleeve	2
741	77–7530	Gear – Timing	1
*842	77–7300	Seal – O Ring	1
*868	77–7890	Seal Assy. – Valve	1
*868A	77–7900	Gasket – Valve	1
*883	77–7760	Gasket – Exhaust	1
979	77–7650	Cover – Oil Pump	1
*1022	77–7320	Gasket – Rocker Cover	1
1023	77–7060	Cover – Valve	1
1024	77–7640	Pump – Oil	1
1026	77–7620	Rod – Push	2
1029	77–7790	Arm – VLV Rocker	2
1034	77–7770	Guide – Push Rod	1
	77–9020	Short Block (Incl. Ref. #1, 7, 9, 9A, 16, 18, 25, 28, 29, 45, 46, 122, 219, 230, 615, 616, 883, 979, 1022, 1024 pg. 8) (Incl. Ref. #163 pg. 10)	1

*Included in Gasket Set
†Included in Carburetor Overhaul Kit

ENGINE GTS–150

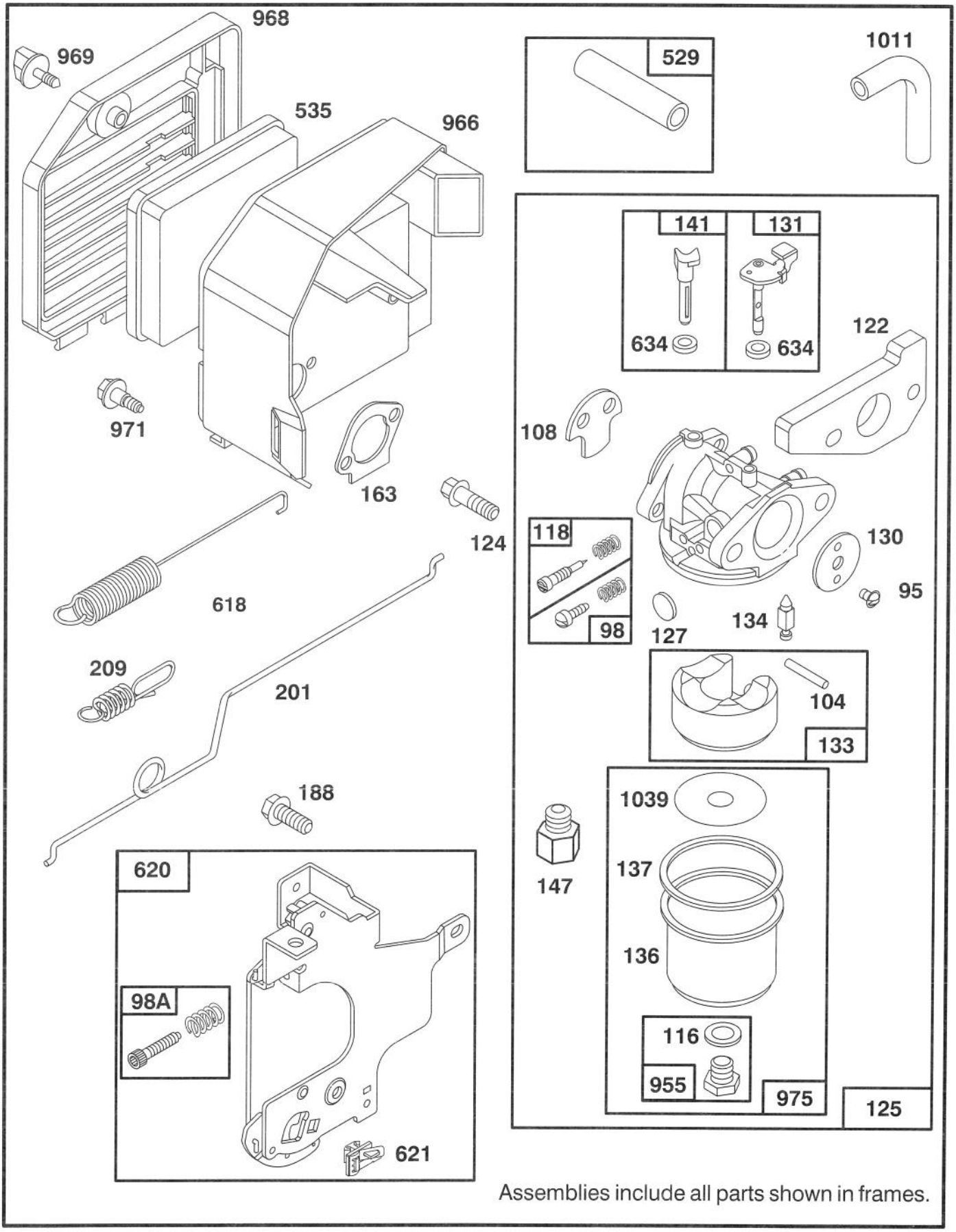

Assemblies include all parts shown in frames.

ENGINE GTS–150

Ref. No.	Part No.	Description	No. Used
95	77–8090	Screw – Round Head	1
98	77–8240	Screw – Idle Adj.	1
98A	77–8020	Screw Assy – Speed Adj.	1
†104	77–8180	Pin – Float Hinge	1
108	77–8070	Valve – Choke	1
†116	77–8210	Washer – Fuel Bowl	1
†118	77–8230	Valve & Kit – Needle	1
†122	77–7820	Adapter Assy.	1
124	77–7970	Screw – Hex Head (Carburetor Mounting)	2
125	77–8050	Carburetor Assy.	1
†127	77–8100	Plug – Welch	1
130	77–8080	Valve – Throttle	1
131	77–8160	Shaft – Throttle	1
133	77–8170	Float – Carburetor	1
†134	77–8110	Valve – Float (Includes Seat)	1
136	77–7240	Bowl – Fuel	1
†137	77–8200	Gasket – Fuel Bowl	1
141	77–8130	Shaft – Choke	1
147	77–8120	Adapter – Jet Note: For High Altitude Jet, Order Part No. 77–9000	1

Ref. No.	Part No.	Description	No. Used
*163	77–7960	Gasket – Air Cleaner	1
188	77–7450	Screw – Hex. Head (connecting bracket)	2
201	77–7980	Link – Governor	1
209	77–7990	Spring – Governor	1
529	77–8030	Tube – Breather	1
535	77–7950	Element – Filter Note: 77–9010 – Element Paper (Optional)	1
618	77–8140	Spring – Return	1
620	77–8000	Bracket – Carburetor	1
621	77–8010	Switch – Stop	1
†634	77–8150	Washer – Seal	2
955	77–8220	Screw – Hex. Head	1
966	77–7940	Base Air Cleaner	1
968	77–7040	Cover – Air Cover	1
969	77–7920	Screw – Air Cleaner	1
971	77–7930	Screw – Air Cleaner	3
975	77–8190	Bowl Assy. – Carburetor	1
1011	77–8040	Tube – Vent	1
†1039	77–7250	Limiter – Float	1

*Included in Gasket Set
†Included in Carburetor Overhaul Kit

ENGINE GTS–150

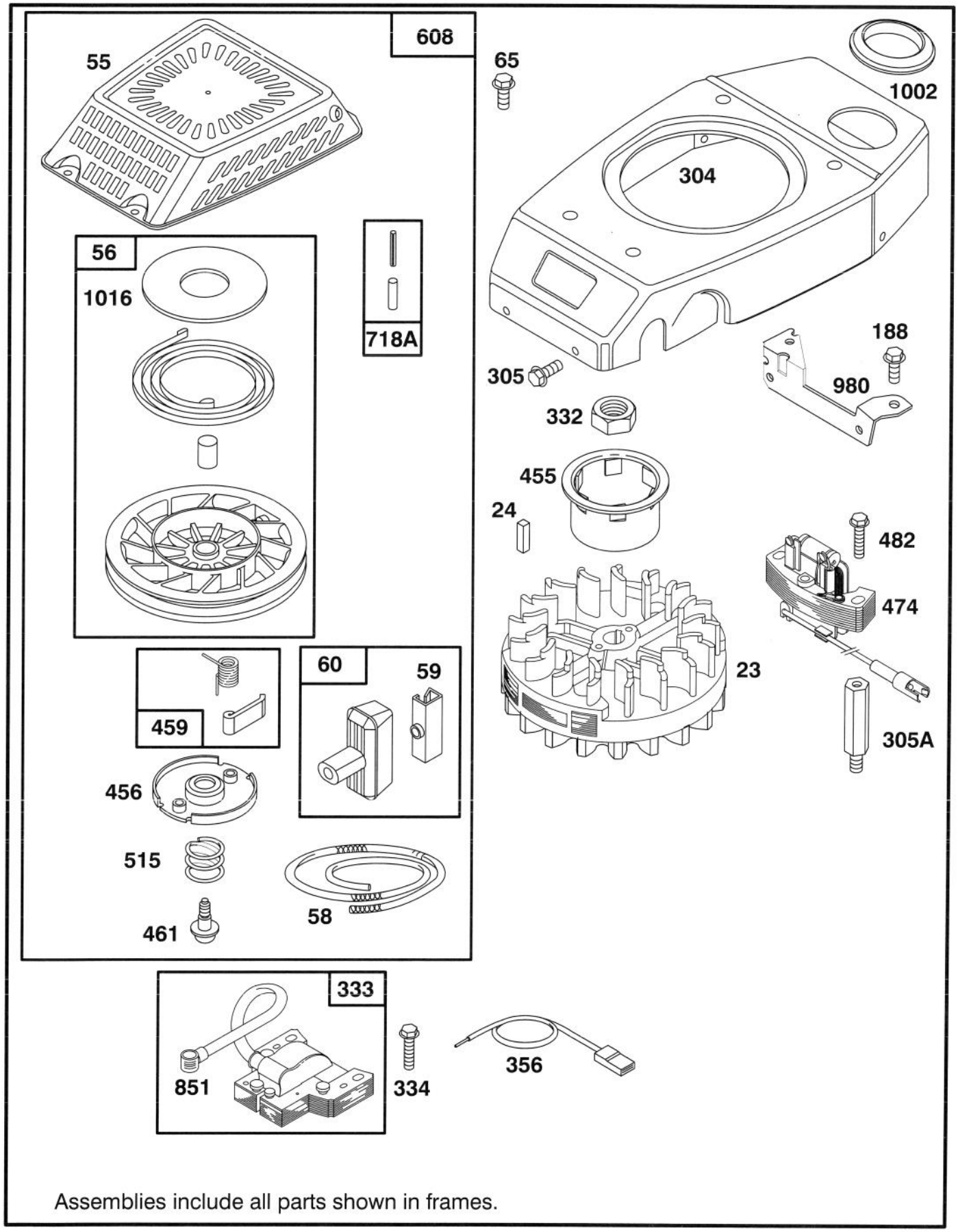

Assemblies include all parts shown in frames.

ENGINE GTS–150

Ref. No.	Part No.	Description	No. Used
23	77–8320	Flywheel – Magneto	1
24	77–8340	Key – Flywheel	1
55	77–8460	Housing – Rewind Starter	1
56	77–9270	Pulley – Rewind Starter	1
58	77–8480	Spool – Starter Rope (Cut To Suit)	1
59	77–7210	Insert – Starter Grip	1
60	77–8520	Grip – Starter Rope	1
65	77–8300	Screw – Hex. Head	4
188	77–7450	Screw – Hex. Head (Blower bracket)	2
304	77–8250	Housing – Blower	1
305	77–8310	Screw – Hex. Head (Blower Housing)	4
305A	77–8390	Stud – Mtg.	2
332	77–8360	Nut – Hexagon	1
333	77–8420	Armature – Magneto	1
334	77–8440	Screw – Sem	2
356	77–8400	Wire – Ground	1
455	77–8350	Cup – Starter	1
456	77–8470	Retainer – Spring	1
459	77–8530	Pawl & spring – Ratchet	2
461	77–8490	Screw – Rewind Starter	1
474	77–8370	Alternator	1
482	77–8870	Screw – Sem	2
515	77–8500	Spring – Retainer	1
608	77–8840	Starter Assy. – Rewind	1
718A	77–8550	Dowel – Sleeve	1
851	77–8430	Terminal – Spark Plug	1
980	77–7140	Bracket – Blower Housing	1
1002	77–7180	Grommet	1
1016	77–8570	Cover – Pulley	1

ENGINE GTS–150

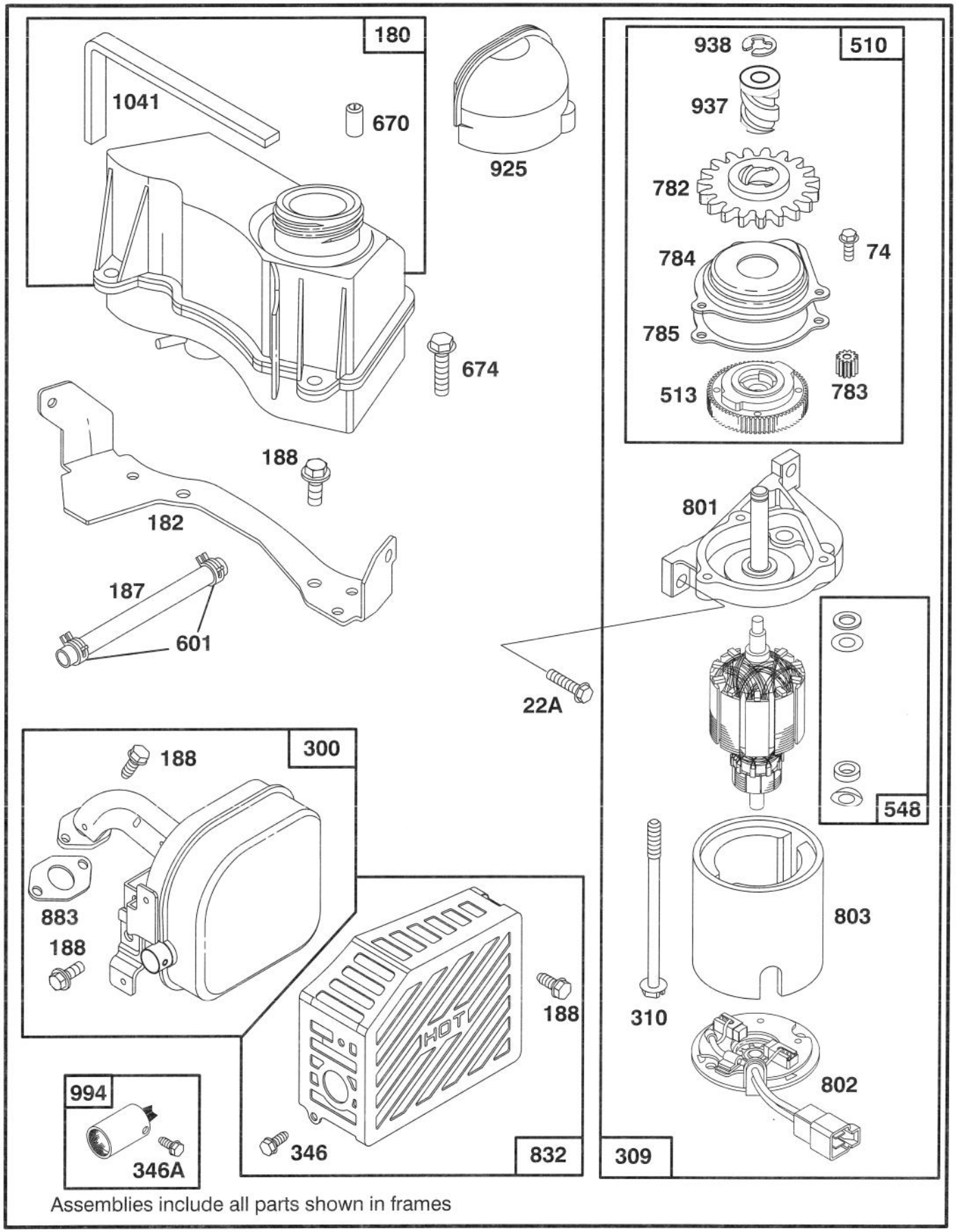

Assemblies include all parts shown in frames

ENGINE GTS–150

Ref. No.	Part No.	Description	No. Used
22A	77–8720	Screw – Carb. Mtg.	2
74	77–8800	Screw – Sem	3
180	77–8580	Tank Assy. – Fuel	1
182	77–7170	Bracket – Fuel Tank	1
187	77–8620	Hose – Fuel (Cut To Suit)	1
188	77–7450	Screw – Hex. Head (Muffler guard, muffler manifold to head, connecting bracket, Tk bracket)	7
300	77–8640	Muffler – Exhaust	1
309	77–8670	Motor Starter	1
310	77–8710	Bolt – Thru	2
346	77–8650	Screw – Self Tap (Muffler Guard)	2
346A	77–9050	Screw – Arrester Mtg.	1
510	77–8910	Drive – Starter	1
513	77–8770	Clutch – Starter	1
548	77–8740	Washer – Starter	1
601	77–8630	Clamp – Fuel Hose	2
670	77–9030	Spacer – Fuel Tank (Incl. 2)	1
674	77–8600	Screw – Tank Mtg.	2
782	77–8810	Gear – Starter	1
783	77–8760	Gear – Pinion	1
784	77–8780	Cover – Gear	1
785	77–8790	Gasket – Gear Cover	1
801	77–8680	Cap – Drive	1
802	77–8690	Cap – End	1
803	77–8700	Housing – Starter	1
832	77–9290	Guard – Muffler	1
*883	77–7760	Gasket – Exhaust	1
925	77–7200	Cover – Starter	1
937	77–8820	Drive – Starter	1
938	77–8830	Retainer – Lock	1
994	77–9040	Arrester – Spark	1
*1041	77–8590	Seal – Foam	1

*Included in Gasket Set

ENGINE GTS–150

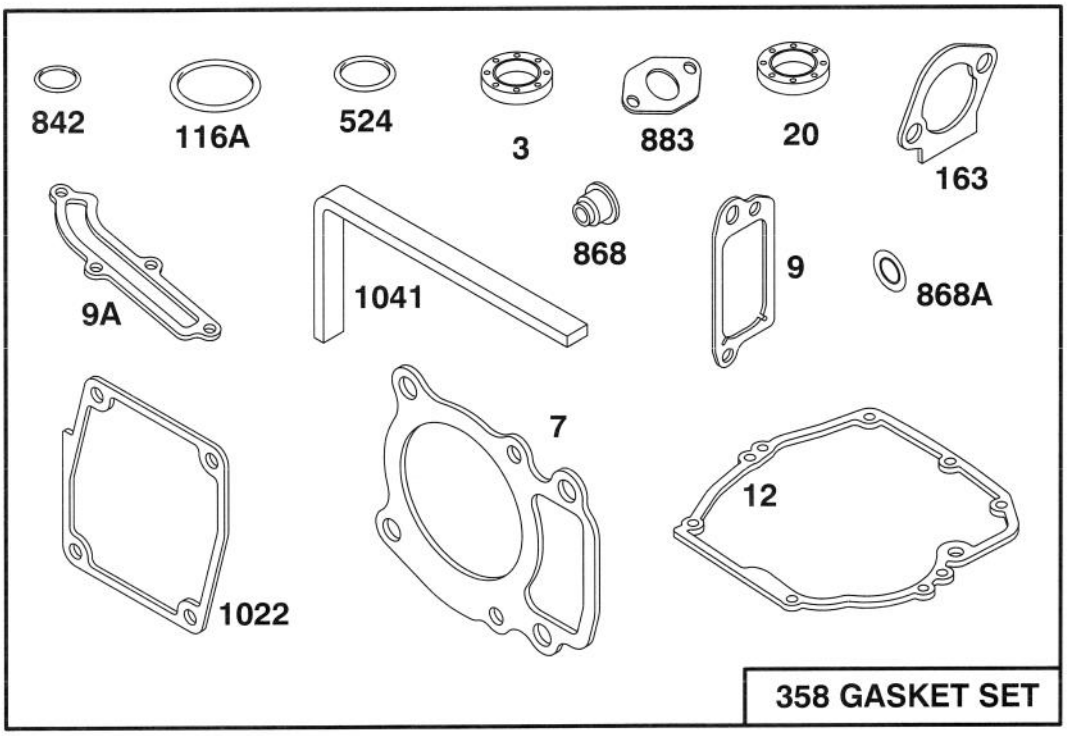

358 GASKET SET

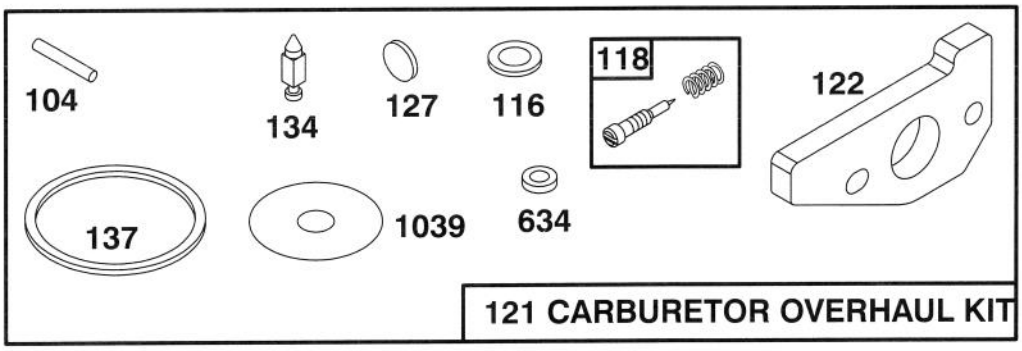

121 CARBURETOR OVERHAUL KIT

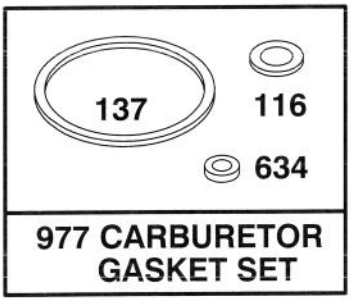

977 CARBURETOR GASKET SET

Assemblies include all parts shown in frames.

ENGINE GTS–150

Ref. No.	Part No.	Description	No. Used
* 3	77–9060	Seal – Oil	1
* 7	77–7740	Gasket – Cylinder Head	1
* 9	77–9250	Gasket – Valve Cover	1
* 9A	77–7410	Gasket – Breather	1
* 12	77–7550	Gasket – Engine Base	1
* 20	77–7570	Seal – Oil	1
† 104	77–8180	Pin – Float Hinge	1
†‡116	77–8210	Washer – Fuel Bowl	1
*116A	77–7660	Seal – O Ring	1
† 118	77–8230	Valve & Kit – Needle	1
† 121	77–8920	Overhaul Kit – Carburetor	1
† 122	77–7820	Adapter Assy.	1
† 127	77–8100	Plug – Welch	1
† 134	77–8110	Valve – Float (Includes Seat)	1
†‡137	77–8200	Gasket – Fuel Bowl	1
* 163	77–7960	Gasket – Air Cleaner	1
358	77–8900	Gasket Set	1
* 524	77–7270	Seal – Intake Elbow	1
‡ 634	77–8150	Washer – Seal	2
* 842	77–7300	Seal – O Ring	1
* 868	77–7890	Seal Assy. – Valve	1
*868A	77–7900	Gasket – Valve	1
* 883	77–7760	Gasket – Exhaust	1
977	77–8930	Gasket Set – Carburetor	1
*1022	77–7320	Gasket – Rocker Cover	1
†1039	77–7250	Limiter – Float	1
*1041	77–8590	Seal – Foam	1

† Included In Carburetor Overhaul Kit
‡ Included In Carburetor Gasket Set
*Included In Gasket Set

3316–185

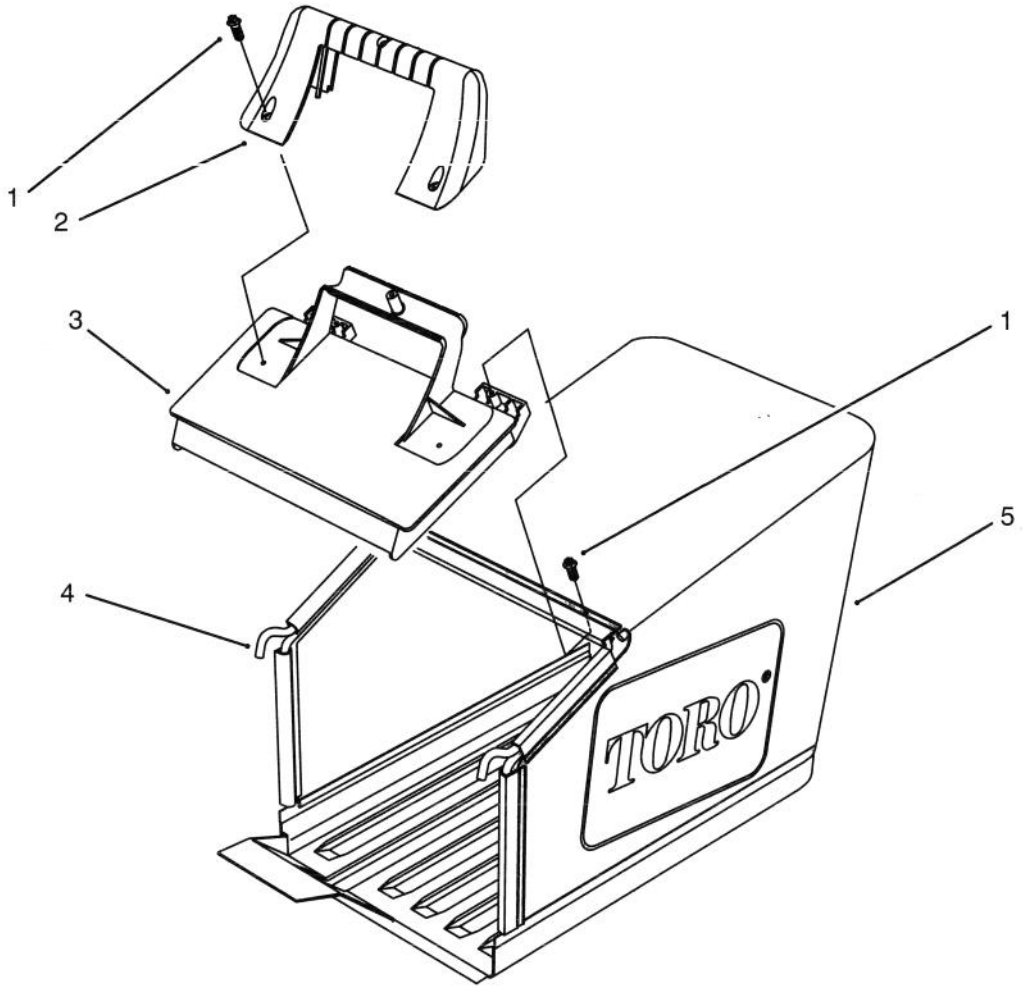

C–1570

GRASS BAG ASSEMBLY

Ref. No.	Part No.	Description	No. Used
1	32144–111	Screw – Index Hex Washer Head	5
2	71–9480	Handle – Door	1
3	71–9470	Door – Bag	1
4	71–9930	Frame – Grass Bag	1
5	71–9680	Bag – Grass 53cm	1

TORO PART NUMBER INDEX

Part No.	Description	Pg. No.	Ref. No.	Qty.
11715	Decal – Triangle	2	*	1
17368	Decal – Front	2	*	1
17738	Decal – Safety	2	*	1
18076	Decal – Specification	2	*	1
14–9949	Wheel & Tire Assembly	1	20	2
14–9959	Wheel Tire & Gear Assy.	4	31	2
16–1739	Panel – Control	6	18	1
16–1769	Housing – 53cm	1	4	1
17–9426	Screw – Handle	7	1	2
19–4050	Knob – Handle Release	6	12	2
22–4710	Charger – Battery (220V)	6	*	1
25–7740	Knob – Arm	4	3	2
25–7740	Knob – Arm	1	28	2
26–0670	Bolt – Blade	3	8	1
27–6231	Bolt – Wheel	1	22	2
27–6231	Bolt – Wheel	4	33	2
27–6250	Bushing – Wheel	1	21	4
27–6250	Bushing – Wheel	4	32	4
29–9570	Bushing – Yoke	4	38	1
36–4780	Washer – Thrust	4	44	1
36–4791	Washer – Thrust	5	48	2
38–7820	Bearing – Ball	5	60	1
40–1940	Washer – Wheel Bolt	1	23	4
46–5520	Lever – Traction	7	7	1
46–5780	Switch – Starter	6	9	1
46–6432	Screw – Handle	7	9	1
46–8800	Lever – Control	7	5	1
48–2060	Bearing –Needle	4	21	2
49–2040	Screw – Self Tapping	4	8	8
52–7430	Control Bar Assembly	7	3	1
55–3570	Gas Cap Assembly	3	4	1
55–3760	Gear – Pinion 15T	5	49	1
55–3770	Gear – 49T (1st Gear)	5	58	1
55–3780	Gear – Pinion 20T	5	50	1
55–3790	Gear – 44T (2nd Gear)	5	57	1
55–3800	Gear – Pinion 25T	5	51	1
55–3810	Gear – 39T (3rd Gear)	5	56	1
60–8710	Case – Gear (Upper)	5	61	1
60–8730	Cover – Gear Case	5	46	1
60–8750	Bushing – Intrmdt. Shaft	5	47	2
60–8770	Bushing – Output Shaft	5	45	1
60–8790	Sleeve – Gear	5	55	1
60–8800	Shaft – Intermediate	5	52	1
60–8810	Retainer – Shift Fork	4	39	1
60–8840	Pulley – Half	4	10	2
60–8850	Bushing – Output Shaft	5	53	1
60–8870	Yoke – Shift	4	37	1
60–8890	Pinion – Bevel	5	59	1
62–3860	Decal – Danger	1	5	1
62–6660	Spacer	4	9	1
62–6673	Gear Case Assy. Complete	5	*	1
62–7540	Retainer – Blade	3	7	1
62–7550	Pulley – Engine	3	13	1
62–7700	Blade – 21	3	10	1
63–8360	Key – Ignition	6	3	1
63–8480	Retainer – Battery	6	16	1
63–8570	Battery	6	15	1
65–2720	Ring – Retaining	4	24	4
65–4710	Ring – Friction	4	25	2
65–4720	Spring – Compression	4	29	2
65–4730	Washer – Thrust (Inner)	4	22	2
65–4740	Washer – Thrust (Keyed)	4	23	4
65–4750	Pinion	4	28	2
65–4760	Washer –Clutch	4	26	2
65–4770	Shaft – Output	4	17	1
65–5042	Pivot Arm Assembly	4	2	2
65–5190	Bracket – Belt Guide	4	7	1
65–5200	Cover	3	12	1
65–5210	Screw – Thread Forming	1	7	2
65–5220	Screw – Cap Socket Hd.	1	26	2
65–5220	Screw – Socket Hd. Cap	4	36	2
65–5250	Clip – Spring	4	43	1
65–5440	Spring Arm Assembly	4	4	2
65–5660	Panel – Screen	1	2	1
66–0020	Panel – Vertical	1	1	1
66–0030	Bracket – Cable Support	3	5	1
66–0210	V–Belt	4	13	1
66–0236	Control – Throttle	6	6	1
66–0330	Support – Spacer	7	2	2
66–0360	Cap – End	4	5	2
66–0540	Arm – Spring Front	1	25	2
66–0560	Screw – Shoulder	1	19	2
66–0570	Guide – Belt	3	11	1
66–0580	Arm – Pivot	2	30	2
66–0620	Retainer – Belt	1	16	1
66–0680	Decal – French Regulation	1	13	1
66–1790	Decal – Danger	6	2	
66–6040	Key – Rocking (R.H.)	4	*	1
66–6050	Key – Rocking (L.H.)	4	27	1
70–9760	Bushing – Sleeve	4	19	2
71–0620	Cable – Traction	7	10	1
71–0960	Support – Cable	7	8	1
71–7900	Cap – Hinge Bolt L.H.	1	10	1
71–7910	Cap – Hinge Bolt R.H.	1	6	1
71–8090	Mount – Handle L.H.	6	13	1
71–8100	Mount – Handle R.H.	6	14	1
71–8580	Spacer – Door	1	12	2
71–9470	Door – Bag	18	3	1
71–9480	Handle – Door	18	2	1
71–9640	Ramp – Discharge	1	27	1
71–9650	Access – Cover	1	14	1
71–9680	Bag – Grass 53cm	18	5	1
71–9690	Handle	6	7	1
71–9800	Door – Discharge	1	9	1
71–9840	Spring – Door	1	11	2
71–9870	Decal – Deck 53cm	2	29	1
71–9871	Decal – TORO	6	19	1
71–9875	Decal – Instruction	6	8	1
71–9920	Cover – Top	1	15	1
71–9930	Frame – Grass Bag	18	4	1
74–1660	Cover – Wheel	4	30	2
74–1671	Spacer – Wheel Cover	4	34	2
76–0760	Key – Shift	4	41	2
76–0770	Collar – Shift	4	42	1
76–0780	Sleeve – Shift Key	4	40	1
76–0920	Lever – Shift	4	16	1
76–2713	Control – Ground Speed	6	1	1
76–2930	Retainer – Cable	4	15	1
77–7040	Cover – Air Cover	11	968	1
77–7060	Cover – Valve	9	1023	1
77–7140	Bracket – Blower Housing	13	980	1
77–7170	Bracket – Fuel Tank	15	182	1
77–7180	Grommet	13	1002	1
77–7200	Cover – Starter	15	925	1
77–7210	Insert – Starter Grip	13	59	1
77–7240	Bowl – Fuel	11	136	1
77–7250	Limiter – Float	11	1039	1
77–7250	Limiter – Float	17	1039	1
77–7260	Dipstick – Oil	9	523	1
77–7270	Seal – Intake Elbow	17*	524	1
77–7270	Seal – Intake Elbow	9	*524	1
77–7280	Tube – Oil Filler	9	525	1

*Not Illustrated

TORO PART NUMBER INDEX (Cont.)

Part No.	Description	Pg. No.	Ref. No.	Qty.
77–7300	Seal – O Ring	9	*842	1
77–7300	Seal – O Ring	17*	842	1
77–7320	Gasket – Rocker Cover	9*	1022	1
77–7320	Gasket – Rocker Cover	17*	1022	1
77–7330	Plug – Spark	9	337	1
77–7340	Elbow – Spark Plug	9	635	1
77–7350	Tube – Breather	9	11	1
77–7360	Screw – Hex. Head	9	10	4
77–7370	Lever – Governor	9	227	1
77–7380	Bolt – Governor Lever	9	562	1
77–7390	Nut – Hex.	9	592	1
77–7400	Baffle – Cylinder	9	572	1
77–7410	Gasket – Breather	9	*9A	1
77–7410	Gasket – Breather	17*	9A	1
77–7420	Screw – Sem	9	307	4
77–7450	Screw – Hex. Head	11	188	2
77–7450	Screw – Hex. Head	13	188	2
77–7450	Screw – Hex. Head	15	188	7
77–7450	Screw – Sem	9	188	5
77–7460	Crank – Governor	9	616	1
77–7470	Washer – Thrust	9	230	1
77–7480	Push Nut	9	615	1
77–7490	Gear – Cam	9	46	1
77–7500	Gear – Governor	9	219	1
77–7520	Crankshaft	9	16	1
77–7530	Gear – Timing	9	741	1
77–7550	Gasket – Engine Base	9	*12	1
77–7550	Gasket – Engine Base	17*	12	1
77–7560	Base – Engine	9	18	1
77–7570	Seal – Oil	9	*20	1
77–7570	Seal – Oil	17*	20	1
77–7590	Cylinder Assy.	9	1	1
77–7600	Dowel – Sleeve	9	718	2
77–7610	Tappet – Valve	9	45	2
77–7620	Rod – Push	9	1026	2
77–7630	Screw – Cylinder Head	9	13	4
77–7640	Pump – Oil	9	1024	1
77–7650	Cover – Oil Pump	9	979	1
77–7660	Seal – O Ring	17*	116A	1
77–7660	Seal – O Ring	9*	116A	1
77–7670	Rod – Connecting	9	29	1
77–7680	Screw – Connecting Rod	9	32	2
77–7690	Piston Assy. (Std.)	9	25	1
77–7700	Ring Set (Std.)	9	26	1
77–7710	Lock – Piston Pin	9	27	2
77–7720	Pin – Piston (STD)	9	28	1
77–7730	Head – Cylinder	9	5	1
77–7740	Gasket – Cylinder Head	9	*7	1
77–7740	Gasket – Cylinder Head	17*	7	1
77–7760	Gasket – Exhaust	15	*883	1
77–7760	Gasket – Exhaust	9	*883	1
77–7760	Gasket – Exhaust	17*	883	1
77–7770	Guide – Push Rod	9	1034	1
77–7780	Stud – Rocker Arm	9	166	2
77–7790	Arm – VLV Rocker	9	1029	2
77–7800	Cap – Valve	9	238	2
77–7810	Spring – Valve	9	35	2
77–7820	Adapter Assy.	11	122	1
77–7820	Adapter Assy.	9	122	1
77–7820	Adapter Assy.	17	122	1
77–7860	Valve – Exhaust	9	33	1
77–7870	Retainer – Spring	9	40	2
77–7880	Valve – Intake	9	34	1
77–7890	Seal Assy. – Valve	9	*868	1
77–7890	Seal Assy. – Valve	17*	868	1
77–7900	Gasket – Valve	9*	868A	1
77–7900	Gasket – Valve	17*	868A	1
77–7910	Nut – Hex Special	9	192	2
77–7920	Screw – Air Cleaner	11	969	1
77–7930	Screw – Air Cleaner	11	971	3
77–7940	Base Air Cleaner	11	966	1
77–7950	Element – Filter	11	535	1
77–7960	Gasket – Air Cleaner	11	*163	1
77–7960	Gasket – Air Cleaner	17*	163	1
77–7970	Screw – Hex Head	11	124	2
77–7980	Link – Governor	11	201	1
77–7990	Spring – Governor	11	209	1
77–8000	Bracket – Carburetor	11	620	1
77–8010	Switch – Stop	11	621	1
77–8020	Screw Assy – Speed Adj.	11	98A	1
77–8030	Tube – Breather	11	529	1
77–8040	Tube – Vent	11	1011	1
77–8050	Carburetor Assy.	11	125	1
77–8070	Valve – Choke	11	108	1
77–8080	Valve – Throttle	11	130	1
77–8090	Screw – Round Head	11	95	1
77–8100	Plug – Welch	11	127	1
77–8100	Plug – Welch	17	127	1
77–8110	Valve – Float	11	134	1
77–8110	Valve – Float	17	134	1
77–8120	Adapter – Jet	11	147	1
77–8130	Shaft – Choke	11	141	1
77–8140	Spring – Return	11	618	1
77–8150	Washer – Seal	11	634	2
77–8150	Washer – Seal	17	634	2
77–8160	Shaft – Throttle	11	131	1
77–8170	Float – Carburetor	11	133	1
77–8180	Pin – Float Hinge	11	104	1
77–8180	Pin – Float Hinge	17	104	1
77–8190	Bowl Assy. – Carburetor	11	975	1
77–8200	Gasket – Fuel Bowl	11	137	1
77–8200	Gasket – Fuel Bowl	17	137	1
77–8210	Washer – Fuel Bowl	11	116	1
77–8210	Washer – Fuel Bowl	17	116	1
77–8220	Screw – Hex. Head	11	955	1
77–8230	Valve & Kit – Needle	11	118	1
77–8230	Valve & Kit – Needle	17	118	1
77–8240	Screw – Idle Adj.	11	98	1
77–8250	Housing – Blower	13	304	1
77–8300	Screw – Hex. Head	13	65	4
77–8310	Screw – Hex. Head	13	305	4
77–8310	Screw – Hex. Head	9	305	2
77–8320	Flywheel – Magneto	13	23	1
77–8340	Key – Flywheel	13	24	1
77–8350	Cup – Starter	13	455	1
77–8360	Nut – Hexagon	13	332	1
77–8370	Alternator	13	474	1
77–8390	Stud – Mtg.	13	305A	2
77–8400	Wire – Ground	13	356	1
77–8420	Armature – Magneto	13	333	1
77–8430	Terminal – Spark Plug	13	851	1
77–8440	Screw – Sem	13	334	2
77–8460	Housing – Rewind Starter	13	55	1
77–8470	Retainer – Spring	13	456	1
77–8480	Spool – Starter Rope	13	58	1
77–8490	Screw – Rewind Starter	13	461	1
77–8500	Spring – Retainer	13	515	1
77–8520	Grip – Starter Rope	13	60	1
77–8530	Pawl & spring – Ratchet	13	459	2
77–8550	Dowel – Sleeve	13	718A	1
77–8570	Cover – Pulley	13	1016	1
77–8580	Tank Assy. – Fuel	15	180	1

*Not Illustrated

TORO PART NUMBER INDEX (Cont.)

Part No.	Description	Pg. No.	Ref. No.	Qty.
77–8590	Seal – Foam	15*	1041	1
77–8590	Seal – Foam	17*	1041	1
77–8600	Screw – Tank Mtg.	15	674	2
77–8620	Hose – Fuel	15	187	1
77–8630	Clamp – Fuel Hose	15	601	2
77–8640	Muffler – Exhaust	15	300	1
77–8650	Screw – Self Tap	15	346	2
77–8670	Motor Starter	15	309	1
77–8680	Cap – Drive	15	801	1
77–8690	Cap – End	15	802	1
77–8700	Housing – Starter	15	803	1
77–8710	Bolt – Thru	15	310	2
77–8720	Screw – Carb. Mtg.	15	22A	2
77–8740	Washer – Starter	15	548	1
77–8760	Gear – Pinion	15	783	1
77–8770	Clutch – Starter	15	513	1
77–8780	Cover – Gear	15	784	1
77–8790	Gasket – Gear Cover	15	785	1
77–8800	Screw – Sem	15	74	3
77–8810	Gear – Starter	15	782	1
77–8820	Drive – Starter	15	937	1
77–8830	Retainer – Lock	15	938	1
77–8840	Starter Assy. – Rewind	13	608	1
77–8870	Screw – Sem	13	482	2
77–8900	Gasket Set	17	358	1
77–8910	Drive – Starter	15	510	1
77–8920	Overhaul Kit – Carburetor	17	121	1
77–8930	Gasket Set – Carburetor	17	977	1
77–8950	Engine – OHV	3	1	1
77–9020	Short Block	9	*	1
77–9030	Spacer – Fuel Tank	15	670	1
77–9040	Arrester – Spark	15	994	1
77–9050	Screw – Arrester Mtg.	15	346A	1
77–9060	Seal – Oil	9	*3	1
77–9060	Seal – Oil	17*	3	1
77–9070	Screw – Engine Base	9	22	7
77–9200	Screw – Hex Hd.	9	10A	2
77–9240	Plug – Pipe	9	15	1
77–9250	Gasket – Breather	9	*9	1
77–9250	Gasket – Valve Cover	17*	9	1
77–9260	Breather Valve	9	8	1
77–9270	Pulley – Rewind Starter	13	56	1
77–9290	Guard – Muffler	15	832	1
80–4791	Harness – Wire	6	10	1
80–4800	Decal – Recoil	3	3	1
86–7990	Screw – Clamp	3	16	1
92–2289	Plate – TORO Logo	3	2	1
218–461	Nut – Lock	6	4	1
2210–249	Clamp – Casing	3	15	1
237–153	Seal – ORing	4	18	2
302–56	Fitting – Grease	4	20	2
321–3	Screw – Hex. Hd. Cap	7	6	1
322–29	Screw – Hex Hd. Cap	1	8	2
3253–22	Washer – Blade	3	9	1
3254–5	Washer – Lock	6	5	1
3256–22	Washer – Flat	7	11	1
3256–23	Washer – Flat	7	13	2
3256–24	Washer – Flat	4	12	1
3256–24	Washer – Flat	1	17	1
3272–5	Pin – Cotter	4	14	1
3290–378	Tie – Cable	6	11	5
3296–5	Nut – Lock	4	11	1
3296–6	Nut – Lock	1	24	4
3296–6	Nut – Lock	4	35	2
3296–42	Nut – Lock	7	4	2
3296–58	Nut – Lock	7	12	2
32104–76	Screw – Self Tapping	6	17	5
32121–120	Pin – Coil	5	54	1
32144–15	Screw – Hex Flange Hd.	1	18	1
32144–70	Screw – Cap Hex. Hd.	1	3	6
32144–70	Screw – Hex Hd. Cap	3	6	7
32144–70	Screw – Hex. Washer Hd.	4	1	3
32144–102	Screw – Hex Hd. Cap	3	14	3
32144–111	Screw – Index Hex Washer	18	1	5

OPTIONAL EQUIPMENT

Leaf Shredder Kit ..... Model No. 59180
Dethatcher Kit ..... Model No. 59131
Spark Arrestor Kit ..... Part No. 77–9040

*Not Illustrated

PRODUCT CHANGES

In an effort to make improvements available to TORO owners as quickly as possible, minor changes are incorporated into Toro's products from time to time that do not become immediately shown in the Parts Catalog. If such a change has been made in your unit, which is not reflected in your manual, see your TORO Distributor or his Authorized TORO Service Dealer for information and part numbers.

COUNTRIES OTHER THAN THE UNITED STATES OR CANADA

Customers who have purchased TORO products exported from the United States or Canada should contact their Toro Distributor (Dealer) to obtain guarantee policies for your country, province or state. If for any reason you are dissatisfied with your Distributor's service or have difficulty obtaining guarantee information, contact the TORO importer. If all other remedies fail, you may contact us at The Toro Company.

MAINTENANCE RECORD

Date								

Compliance with Radio Interference Regulations Certified.
Certifie Conforme au Reglement sur le Brouillage Radioelectrique.

MAINTENANCE RECORD

Date								

MAINTENANCE RECORD

Date								