Form Number 3357-448 Rev B

# 22in Recycler® Lawn Mower

**Model No. 20076 - 270000001 and up.**

## Parts Catalog

**Ordering Replacement Parts**
To order replacement parts, please supply the part number, the quantity, and the description of each part desired.

**Understanding Reference Numbers**
Each Identified part in an illustration has a reference number. The reference number for a part also appears in the parts list, along with other information about the part.

This catalog uses two special reference number formats, one to indicate parts in a service assembly and another to indicate the quantity of a given part in an illustration.

**Service Assembly Reference Numbers**
Parts in service assemblies have reference numbers in the form a:b. The a represents the reference number of the entire service assembly and the b represents a sequential number unique to each part within the service assembly.

For example, a wheel assembly might be identified by reference number 6, the tire by 6:1, the valve by 6:2, and the wheel by 6:3. When you order the assembly identified by reference number 6, you receive all parts identified by reference numbers 6:1, 6:2, and 6:3. However, you may also order any part individually. Reference numbers of this type appear in illustrations and in part lists.

**Reference Numbers Indicating Quantity**
In an illustration, if a reference number indicates more than one part, the reference number has the form nX y. The n represents the quantity of the part, the X is the multiplication symbol, and the y represents the reference number.

For example, in an illustration, the reference number 2X 37 means that two of the parts identified by reference number 37 are indicated.

Register your product at www.Toro.com

**© The Toro Company - 2008**
**All Rights Reserved**

# Contents


| Description | Page |
|---|---|
| Deck, Side Chute and Rear Door Assembly | 3 |
| Front Axle Assembly | 4 |
| Rear Axle Assembly | 5 |
| Rear Axle and Transmission Assembly | 6 |
| Transmission Assembly No. 106-3956 | 7 |
| Engine Assembly | 8 |
| Handle Assembly | 9 |
| Electric Start Assembly | 10 |
| Rear Bag Assembly | 11 |
| Engine Assembly No. 1 Tecumseh LV195XA-362086E | 12 |
| Engine Assembly No. 2 Tecumseh LV195XA-362086E | 14 |
| Carburetor Assembly No. 640350 Tecumseh LV195XA-362086E | 16 |
| Rewind Starter Assembly No. 590739 Tecumseh LV195XA-362086E | 17 |
| Electric Starter Assembly No. 35707 Tecumseh LV195XA-362086E | 18 |
| Attachments and Accessories List | 19 |


# Part Description Abbreviations

Part descriptions in this catalog may include the following abbreviations.

| | |
|---|---|
| AR | as required |
| ASM | assembly |
| BBC | blade brake clutch |
| CARR | carriage |
| DEG | degrees |
| EXT | external |
| FH | flat head |
| GA | gauge |
| HD | heavy-duty |
| HF | hex flange |
| HH | hex head |
| HHF | hex head flange |
| HHFTF | hex head flange thread forming |
| HJ | hex jam |
| HLH | hex lag head |
| HOC | height-of-cut |
| HSBH | hex socket button head |
| HSFH | hex socket flat head |
| HSH | hex socket head |
| HWH | hex washer head |
| HWHTF | hex washer head thread forming |
| HYD | hydraulic |
| LH | left hand |
| NI | nylon insert |
| NPTF | national pipe thread fine |
| PFH | phillips flat head |
| PPH | phillips pan head |
| PPHTF | phillips pan head thread forming |
| PRH | phillips round head |
| PTH | phillips truss head |
| PTO | power-take-off |
| RH | right hand |
| ROPS | roll-over protection system |
| SFH | slotted fillister head |
| SHH | slotted hex head |
| SHWH | slotted hex washer head |
| SPH | slotted pan head |
| SQH | square head |
| SRH | slotted round head |
| STD | standard |
| TAP | self tapping |
| TTH | torx truss head |

# Footnotes

❶ Not illustrated

❷ Not serviced separately

❸ Obtain from your local Tecumseh dealer

❹ Included in Repair Kit 632760B

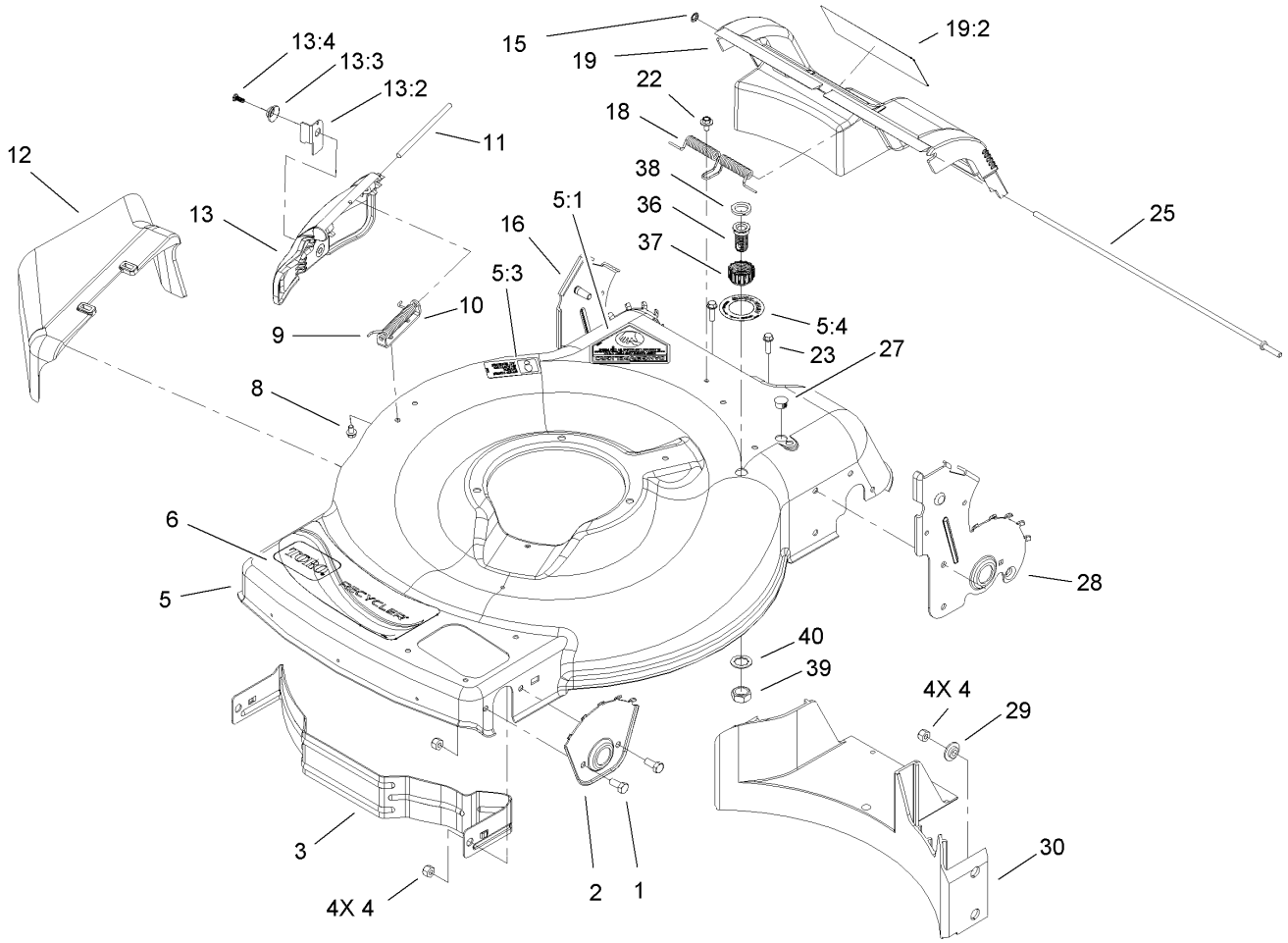


# Deck, Side Chute and Rear Door Assembly

| Ref | Part No. | Qty. | Description |
|---|---|---|---|
| 1 | 322-3 | 4 | Screw-HH |
| 2 | 105-1808-03 | 2 | Plate-HOC, Front |
| 3 | 104-8694-03 | 1 | Baffle-Front |
| 4 | 3296-29 | 8 | Nut-Lock, NI |
| 5 | 112-8854 | 1 | BBC Housing ASM |
| 5:1 | 94-8072 | 1 | Decal-Danger |
| 5:3 | 108-8117 | 1 | Decal |
| 5:4 | 112-8867 | 1 | Decal |
| 6 | 114-0321 | 1 | Decal |
| 8 | 99-8445 | 2 | Screw-HWH |
| 9 | 99-5293 | 1 | Spring-Torsion |
| 10 | 112-6416 | 1 | Bracket-Cover |
| 11 | 99-5291 | 1 | Rod-Cover |
| 12 | 105-3028 | 1 | Chute-Discharge, Side |
| 13 | 106-8376 | 1 | Discharge Door ASM |
| 13:2 | 107-0795 | 1 | Latch-Door |
| 13:3 | 107-7456 | 1 | Cap-Door |
| 13:4 | 107-7461 | 1 | Screw-Plastite |
| 15 | 32112-6 | 1 | Nut-Push |
| 16 | 112-6441 | 1 | 8 Inch RH HOC Plate ASM |
| 18 | 105-3032 | 1 | Spring-Door, Rear |
| 19 | 112-8864 | 1 | Rear Door ASM |
| 19:2 | 105-1295 | 1 | Decal-Warning |
| 22 | 46-6810 | 1 | Screw And Washer ASM |

| Ref | Part No. | Qty. | Description |
|---|---|---|---|
| 23 | 46-8091 | 2 | Screw-HWH |
| 25 | 105-1827 | 1 | Rod-Pivot, Rear Door |
| 27 | 104-9369 | 1 | Plug-Dome |
| 28 | 112-6443 | 1 | 8 Inch LH HOC Plate ASM |
| 29 | 105-3006 | 4 | Washer-Stepped |
| 30 | 105-1834 | 1 | Baffle-Rear |
| 36 | 112-6400 | 1 | Port-Washout |
| 37 | 112-6401 | 1 | Coupling-Hose, Washout Port |
| 38 | 112-6438 | 1 | Washer-Seal, Washout Port |
| 39 | 3218-6 | 1 | Nut-Jam |
| 40 | 3254-5 | 1 | Washer-Tooth |

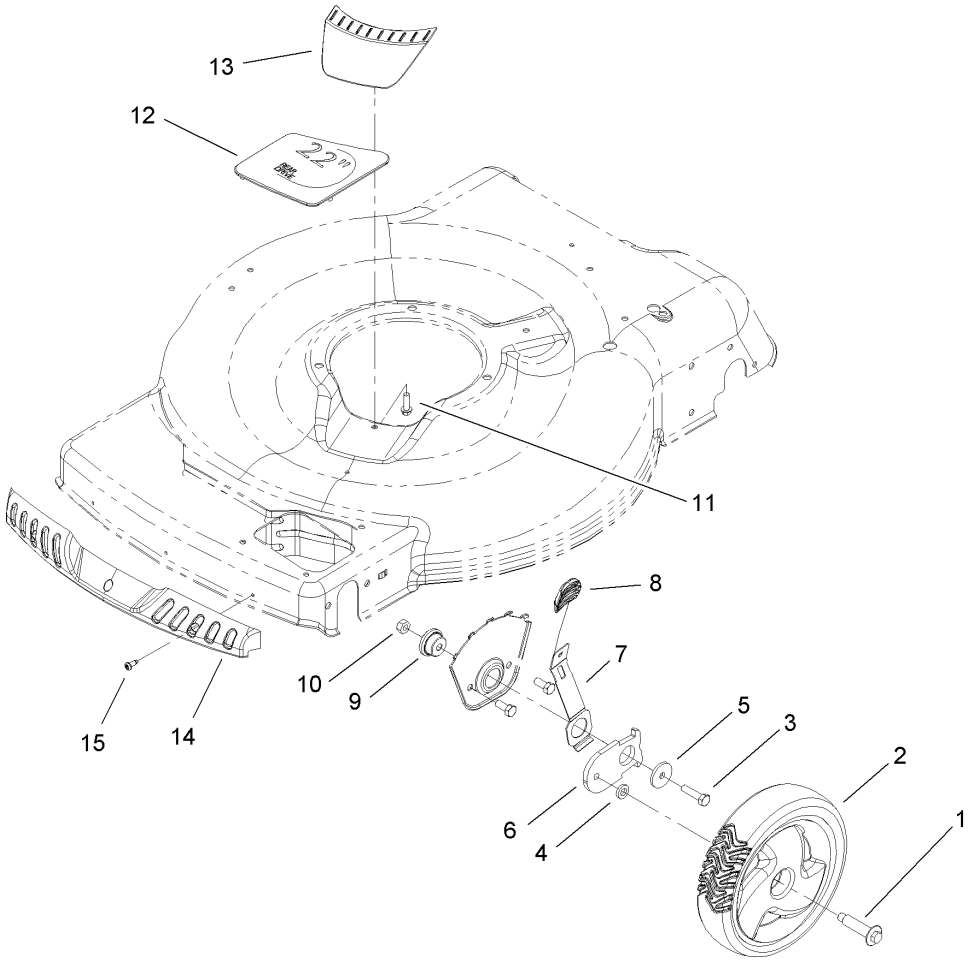


# Front Axle Assembly

| Ref | Part No. | Qty. | Description |
|---|---|---|---|
| 1 | 614650 | 2 | Bolt-Shoulder |
| 2 | 105-1814 | 2 | Wheel ASM |
| 3 | 322-6 | 2 | Screw-HH |
| 4 | 110-7466 | 2 | Washer-Bolt, Wheel |
| 5 | 105-3048 | 2 | Washer-Flat |
| 6 | 105-1807 | 2 | Arm-Pivot, Front |
| 7 | 105-1809 | 2 | Arm-Spring |
| 8 | 105-3042 | 2 | Knob-Lever, HOC |
| 9 | 105-1818 | 2 | Bushing-Mount, HOC |
| 10 | 3296-29 | 2 | Nut-Lock, NI |
| 11 | 46-8091 | 1 | Screw-HWH |
| 12 | 105-3004 | 1 | Cover-Cutout |
| 13 | 105-3005 | 1 | Cover-Belt Opening |
| 14 | 104-9359 | 1 | Bumper-Mower |
| 15 | 105-6849 | 3 | Screw-Thread Forming |

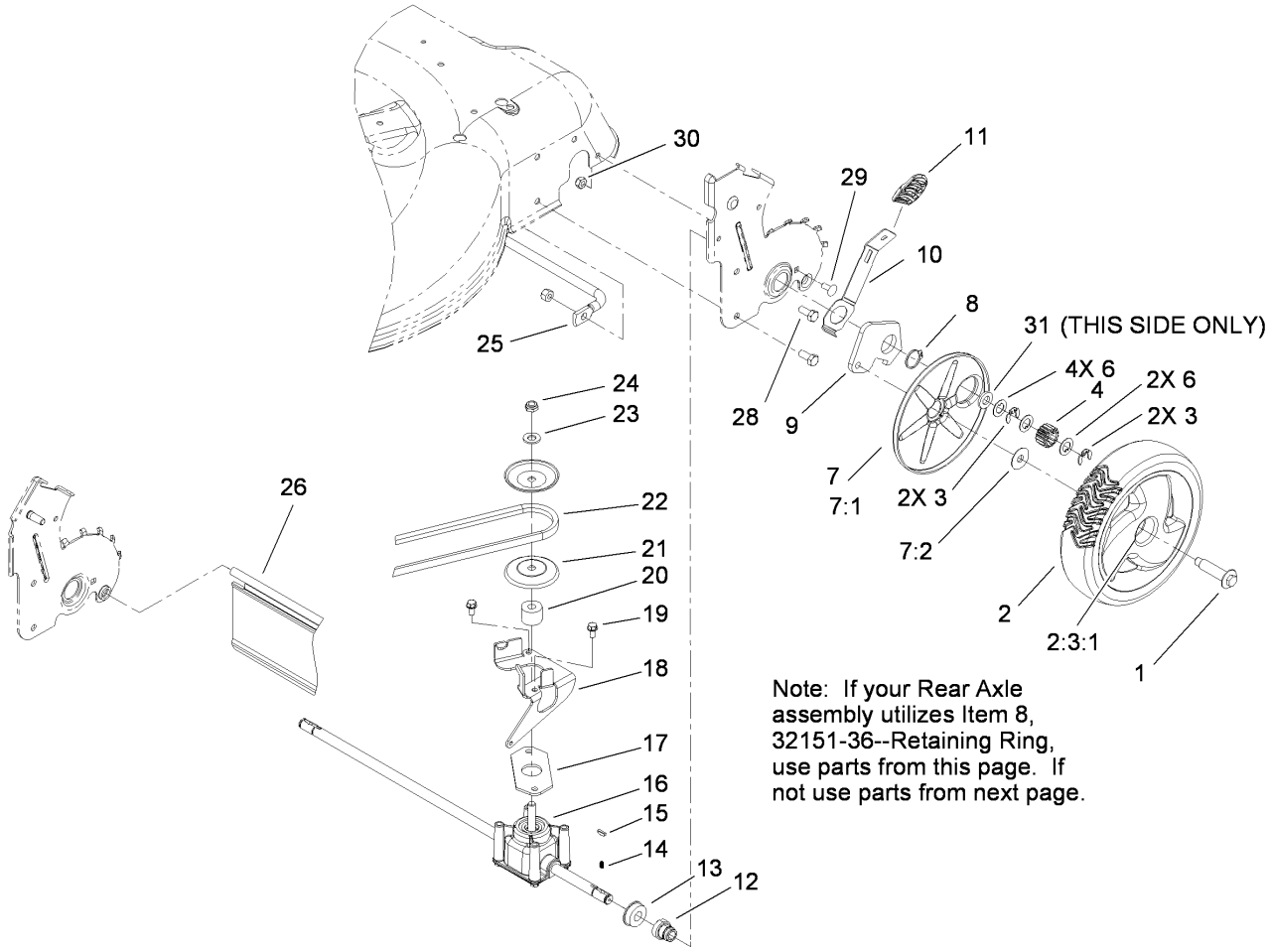


# Rear Axle Assembly

| Ref | Part No. | Qty. | Description |
|---|---|---|---|
| 1 | 614650 | 2 | Bolt-Shoulder |
| 2 | 105-3036 | 2 | Wheel Gear ASM |
| ❶❷2:3 | | 1 | Wheel ASM |
| 2:3:1 | 27-6250 | 2 | Bushing |
| 3 | 65-2720 | 4 | Ring-Clip, Locking |
| 4 | 105-3040 | 2 | Gear-Pinion, 15T |
| 6 | 105-6840 | 6 | Washer-Thrust |
| 7 | 110-1792 | 2 | Wheel Cover ASM |
| ❷7:1 | | 1 | Cover-Wheel |
| 7:2 | 614426 | 1 | Washer-Stepped |
| 8 | 32151-36 | 2 | Ring-Retaining |
| 9 | 105-1819 | 2 | Arm-Pivot, Rear |
| 10 | 105-1809 | 2 | Arm-Spring |
| 11 | 105-3042 | 2 | Knob-Lever, HOC |
| 12 | 104-8698 | 2 | Retainer-Bearing, HOC |
| 13 | 104-8699 | 2 | Bearing-Ball |
| 14 | 39-9650 | 2 | Spring-Compression |
| 15 | 612066 | 2 | Key |
| 16 | 106-3956 | 1 | Transmission ASM |
| 17 | 108-9756 | 1 | Gasket-Gearbox |
| 18 | 106-6809-03 | 1 | Bracket-Pivot |
| 19 | 32144-4 | 2 | Screw-HWH |
| 20 | 92-5791 | 1 | Spacer |
| 21 | 100-1176 | 2 | Pulley-Half |

| Ref | Part No. | Qty. | Description |
|---|---|---|---|
| 22 | 91-2258 | 1 | V-Belt |
| 23 | 3256-24 | 1 | Washer-Flat |
| 24 | 3296-5 | 1 | Nut-Lock |
| 25 | 105-1811 | 1 | Brace-Plate, HOC |
| 26 | 114-1585 | 1 | Shield-Trailing |
| 28 | 322-6 | 4 | Screw-HH |
| 29 | 3229-11 | 2 | Screw-CARR |
| 30 | 3296-16 | 2 | Nut-Lock, NI |
| 31 | 36-4780 | 1 | Washer-Plain |

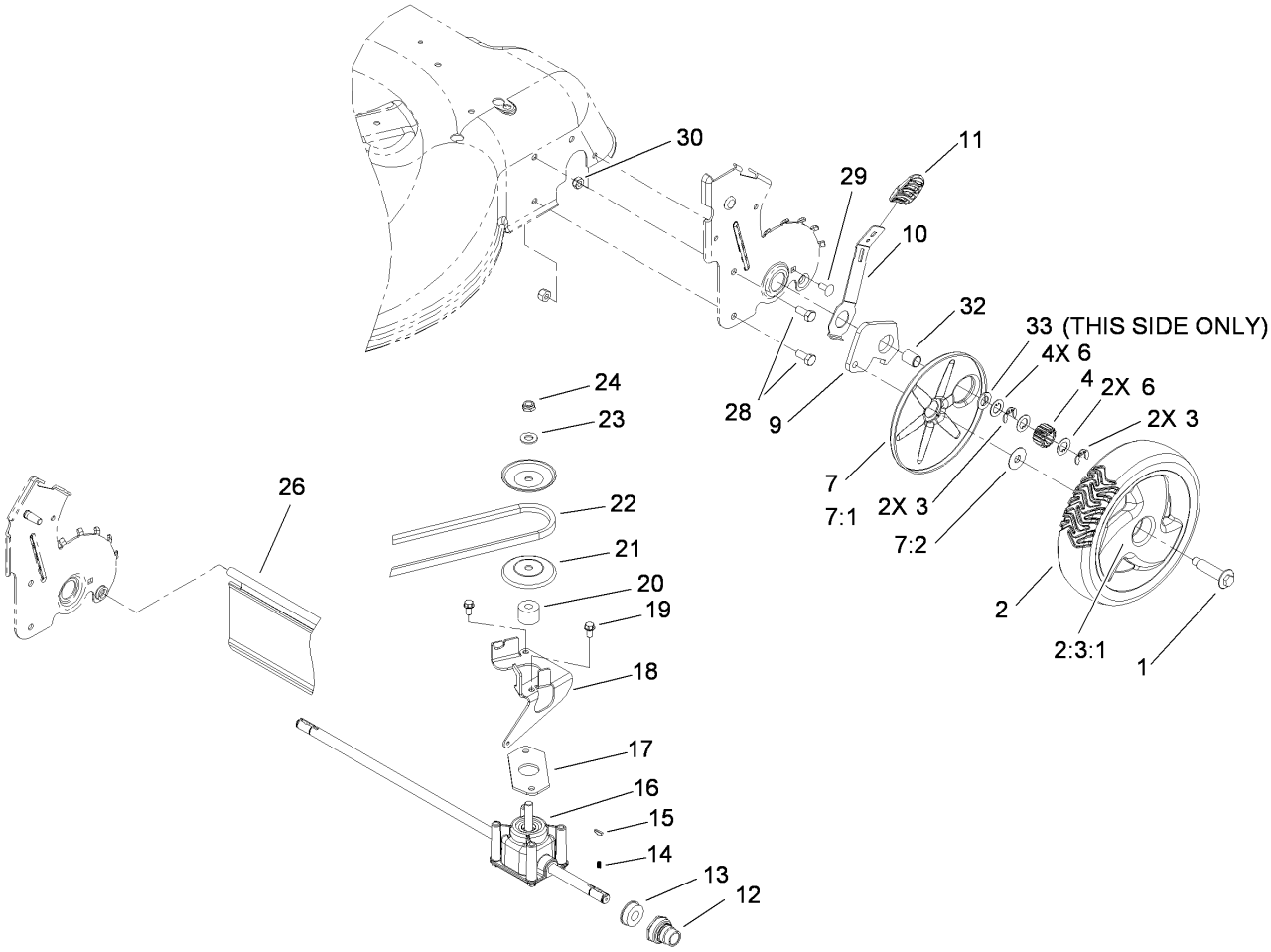


# Rear Axle and Transmission Assembly

| Ref | Part No. | Qty. | Description |
|---|---|---|---|
| 1 | 614650 | 2 | Bolt-Shoulder |
| 2 | 105-3036 | 2 | Wheel Gear ASM |
| ❶❷2:3 | | 1 | Wheel ASM |
| 2:3:1 | 27-6250 | 2 | Bushing |
| 3 | 65-2720 | 4 | Ring-Clip, Locking |
| 4 | 105-3040 | 2 | Gear-Pinion, 15T |
| 6 | 105-6840 | 6 | Washer-Thrust |
| 7 | 110-1792 | 2 | Wheel Cover ASM |
| ❷7:1 | | 1 | Cover-Wheel |
| 7:2 | 614426 | 1 | Washer-Stepped |
| 9 | 108-9781 | 2 | Arm-Pivot, Rear |
| 10 | 108-9780 | 2 | Arm-Spring |
| 11 | 105-3042 | 2 | Knob-Lever, HOC |
| 12 | 108-9779 | 2 | Retainer-Bushing, HOC |
| 13 | 104-8699 | 2 | Bearing-Ball |
| 14 | 39-9650 | 2 | Spring-Compression |
| 15 | 612066 | 2 | Key |
| 16 | 106-3956 | 1 | Transmission ASM |
| 17 | 108-9756 | 1 | Gasket-Gearbox |
| 18 | 106-6809-03 | 1 | Bracket-Pivot |
| 19 | 32144-4 | 2 | Screw-HWH |
| 20 | 92-5791 | 1 | Spacer |
| 21 | 100-1176 | 2 | Pulley-Half |
| 22 | 91-2258 | 1 | V-Belt |

| Ref | Part No. | Qty. | Description |
|---|---|---|---|
| 23 | 3256-24 | 1 | Washer-Flat |
| 24 | 3296-5 | 1 | Nut-Lock |
| 26 | 114-1585 | 1 | Shield-Trailing |
| 28 | 322-6 | 4 | Screw-HH |
| 29 | 3229-11 | 2 | Screw-CARR |
| 30 | 3296-16 | 2 | Nut-Lock, NI |
| 32 | 108-9782 | 2 | Bushing-Sleeve |
| 33 | 110-7191 | 1 | Washer-Thrust |

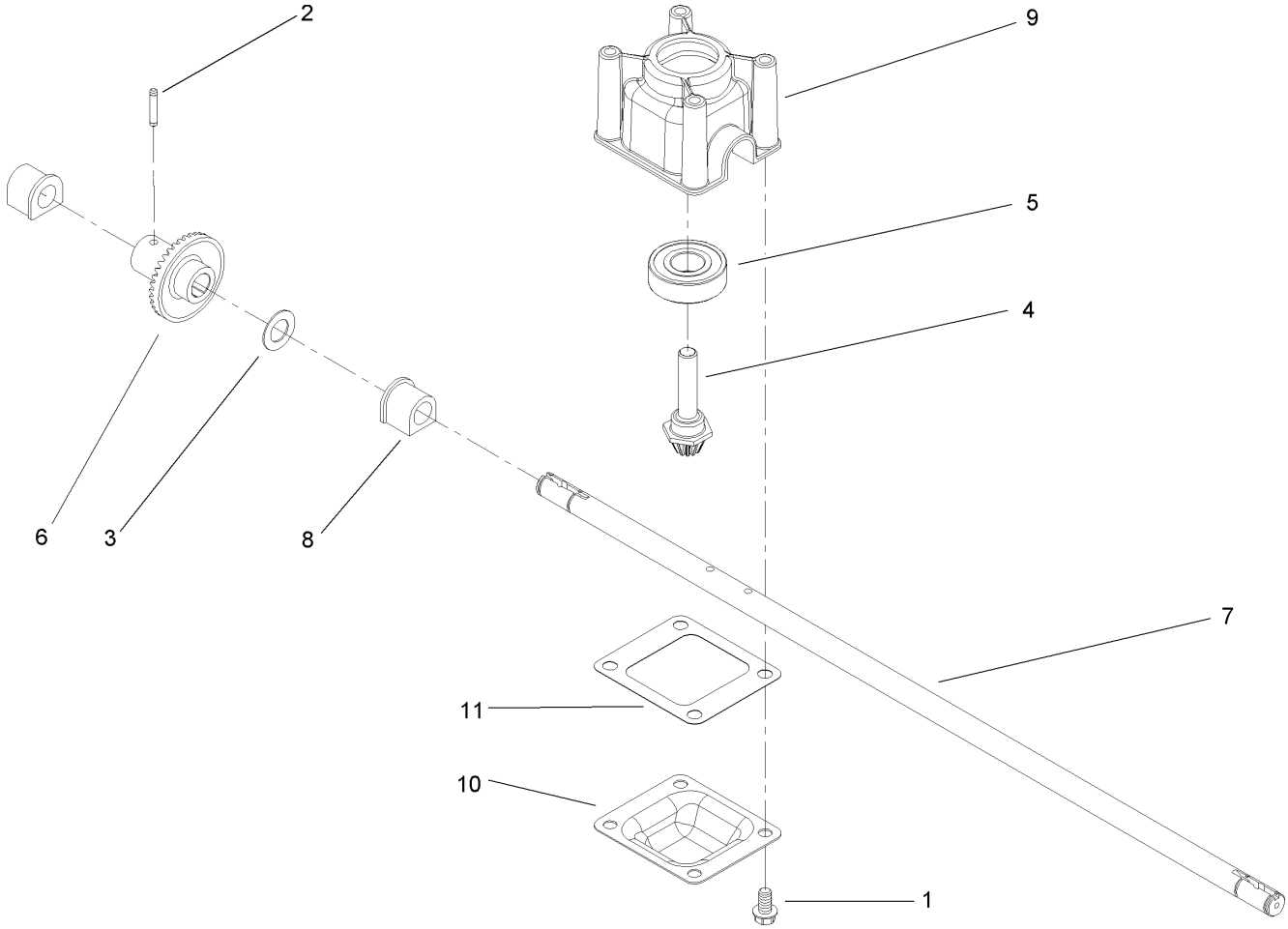


# Transmission Assembly No. 106-3956

| Ref | Part No. | Qty. | Description |
|---|---|---|---|
| 1 | 32144-4 | 4 | Screw-HWH |
| 2 | 105-6817 | 1 | Pin-Groove |
| 3 | 36-4780 | 1 | Washer-Plain |
| 4 | 92-5790 | 1 | Pinion |
| 5 | 100-1048 | 1 | Bearing-Ball |
| 6 | 104-8671 | 1 | Gear-Bevel, 37T |
| 7 | 106-3957 | 1 | Shaft-Output |
| 8 | 104-8673 | 2 | Bushing-Shaft, Output |
| 9 | 104-8674 | 1 | Gearcase-Upper |
| 10 | 104-8675-03 | 1 | Cover-Gearcase |
| 11 | 105-6839 | 1 | Gasket-Gearcase |

| | | | |
|---|---|---|---|
| | | | |

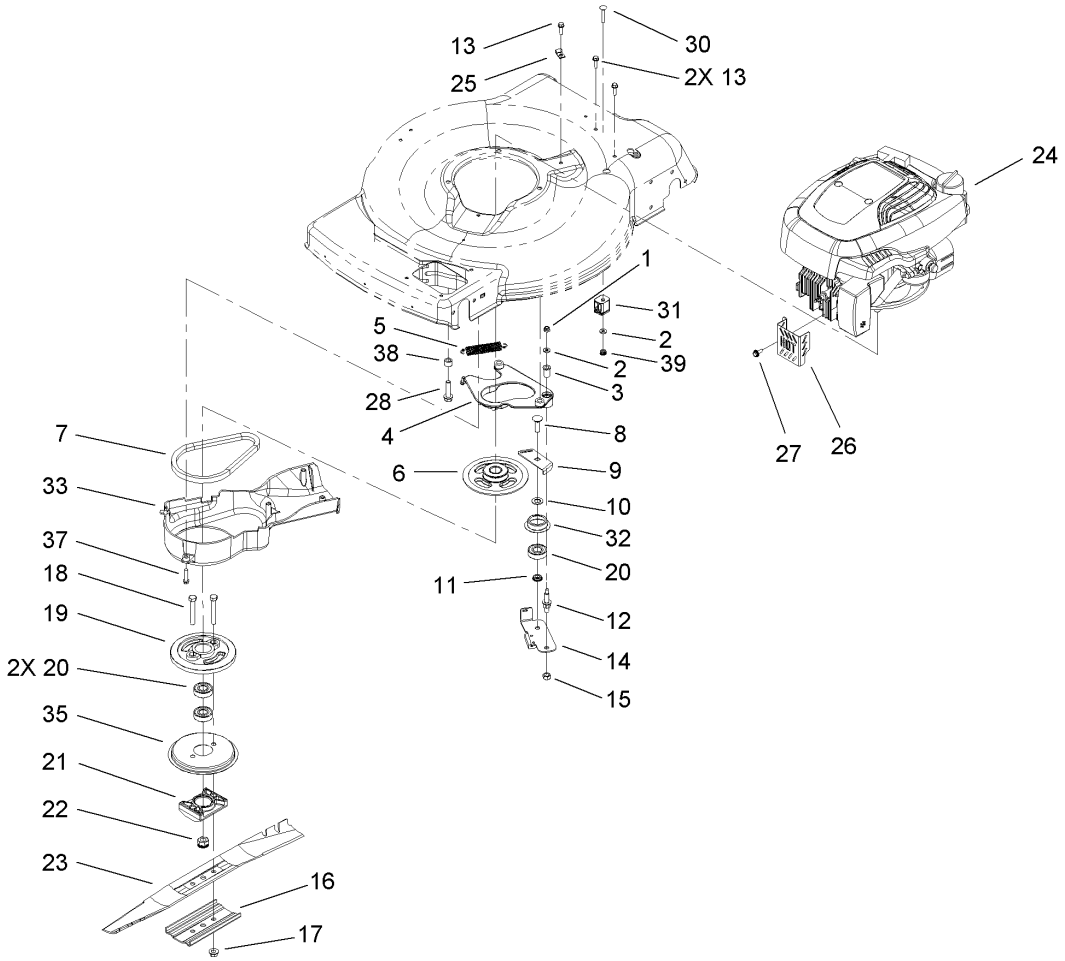


# Engine Assembly

| Ref | Part No. | Qty. | Description |
|---|---|---|---|
| 1 | 3296-73 | 1 | Nut-Lock, NI |
| 2 | 3256-16 | 2 | Washer-Flat |
| 3 | 107-0797 | 1 | Bushing |
| 4 | 108-9341 | 1 | Plate-Anchor |
| 5 | 108-3792 | 1 | Spring-Tension, Brake |
| 6 | 110-7456 | 1 | Pulley |
| 7 | 110-1790 | 1 | Belt-BBC |
| 8 | 3231-25 | 1 | Screw-CARR |
| 9 | 107-7471 | 1 | Plate-Guide |
| 10 | 605256 | 1 | Washer |
| 11 | 107-0758 | 1 | Spacer-Bearing |
| 12 | 107-0759 | 1 | Bolt-Shoulder |
| 13 | 46-8091 | 3 | Screw-HWH |
| 14 | 107-7477 | 1 | Brake Arm ASM |
| 15 | 603773 | 2 | Nut |
| 16 | 108-3766-03 | 1 | Support-Blade |
| 17 | 54-9190 | 2 | Nut-Lock |
| 18 | 3211-42 | 2 | Screw-HH |
| 19 | 107-0754 | 1 | Drum |
| 20 | 100-1048 | 3 | Bearing-Ball |
| 21 | 107-7487 | 1 | Support-Blade |
| 22 | 108-9342 | 1 | Nut-Hex |
| 23 | 108-9764-03 | 1 | Blade-22 Inch |

| Ref | Part No. | Qty. | Description |
|---|---|---|---|
| ❷❸24 | | 1 | Engine-Tecumseh, Lv195Xa-362086E |
| 25 | 2412-72 | 1 | Clip-Closed, Insulated |
| 26 | 106-8346-03 | 1 | Guard-Muffler |
| 27 | 32144-85 | 3 | Screw-HWH |
| 28 | 32144-102 | 3 | Screw-HWH |
| 30 | 3229-4 | 1 | Screw-CARR |
| 31 | 106-6801 | 1 | Anchor-Cable, BBC |
| 32 | 108-3790 | 1 | Retainer-Belt |
| 33 | 107-0798 | 1 | Cover-BBC |
| 35 | 108-3787 | 1 | Disc |
| 37 | 46-8092 | 1 | Screw-Plastite |
| 38 | 100-6447 | 1 | Tube-Spacer |
| 39 | 3296-56 | 1 | Nut-Lock, NI |

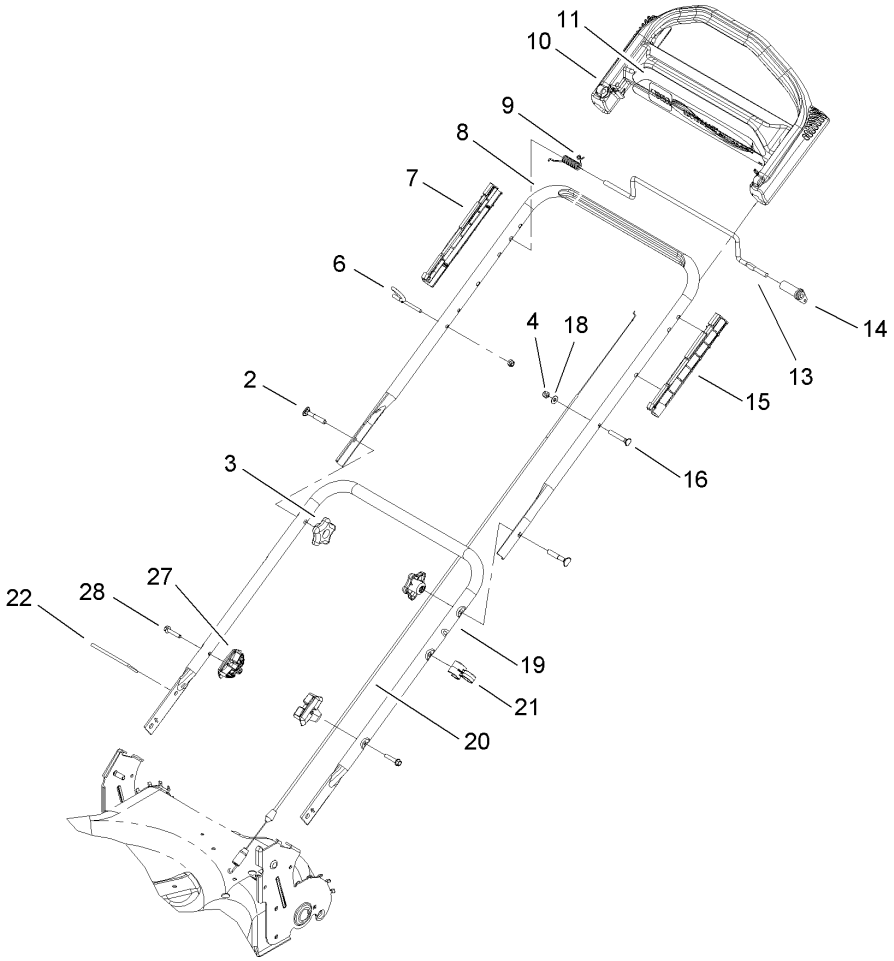


# Handle Assembly

| Ref | Part No. | Qty. | Description |
|---|---|---|---|
| 2 | 112-8876 | 2 | Screw-Handle |
| 3 | 108-8162 | 2 | Knob-Locking |
| 4 | 3296-73 | 2 | Nut-Lock, NI |
| 6 | 86-9671 | 1 | Guide-Rope |
| 7 | 105-6841 | 2 | Guide-RH |
| 8 | 104-8680-05 | 1 | Handle-Upper |
| 9 | 104-8690 | 1 | Spring-Torsion |
| 10 | 104-8678 | 1 | Handle-Control |
| 11 | 114-0338 | 1 | Decal |
| 13 | 99-1588 | 1 | Bar-Control, Traction |
| 14 | 99-1589 | 1 | Lever-Traction |
| 15 | 105-6842 | 1 | Guide-LH |
| 16 | 321-50 | 1 | Screw-HH |
| 18 | 3256-1 | 1 | Washer-Flat |
| 19 | 112-6440-05 | 1 | Handle-Lower |
| 20 | 105-1844 | 1 | Cable-Traction |
| 21 | 106-6805 | 1 | Guide-Cable |
| 22 | 614249 | 1 | Strap-Tie |
| 27 | 108-9788 | 2 | Anchor-Bag |
| 28 | 32144-110 | 2 | Screw-HWH |

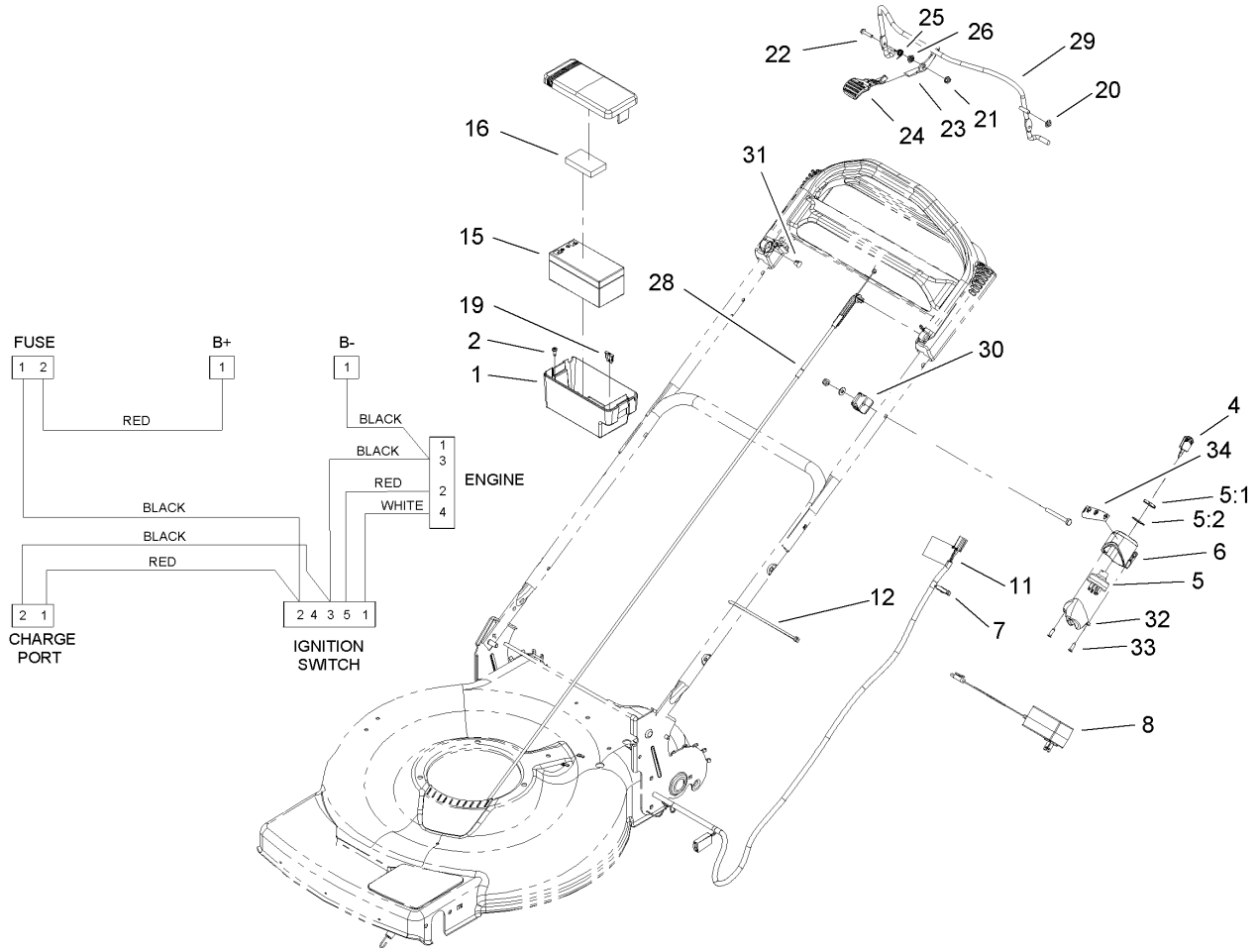


# Electric Start Assembly

| Ref | Part No. | Qty. | Description |
|---|---|---|---|
| 1 | 108-4844 | 1 | Battery Box ASM |
| 2 | 105-6849 | 2 | Screw-Thread Forming |
| 4 | 700918 | 1 | Key |
| 5 | 23-0660 | 1 | Switch-Starter |
| 5:1 | 218-461 | 1 | Nut-HH |
| 5:2 | 3254-5 | 1 | Washer-Tooth |
| 6 | 108-3795 | 1 | Housing-Key Switch |
| 7 | 110-1618 | 1 | Harness-Wire |
| 8 | 104-7401 | 1 | Charger-12 Volt |
| 11 | 104-7953 | 1 | Decal-Harness |
| 12 | 614249 | 2 | Strap-Tie |
| 15 | 106-8397 | 1 | Battery-12 Volt |
| 16 | 107-3774 | 1 | Foam-Battery, Top |
| 19 | 99-6124 | 2 | Fuse-40 Amp |
| 20 | 3290-337 | 1 | Nut-Speed |
| 21 | 32128-17 | 1 | Nut-Lock, Flange |
| 22 | 106-9169 | 1 | Screw |
| 23 | 106-6802 | 1 | Lever |
| 24 | 112-8884 | 1 | Knob-BBC |
| 25 | 107-7462 | 1 | Spring-Torsion |
| 26 | 107-7463 | 1 | Spacer |
| 28 | 107-0799 | 1 | Cable ASM |
| 29 | 108-3788 | 1 | Bail-Brake |
| 30 | 92-7729 | 1 | Anchor-Cable, Upper |

| Ref | Part No. | Qty. | Description |
|---|---|---|---|
| 31 | 104-9368 | 1 | Plug-Dome |
| 32 | 108-3796 | 1 | Cvr-Swtch M04 |
| 33 | 32144-111 | 2 | Screw-PPH |
| 34 | 108-9751 | 1 | Decal-Switch, Ignition |

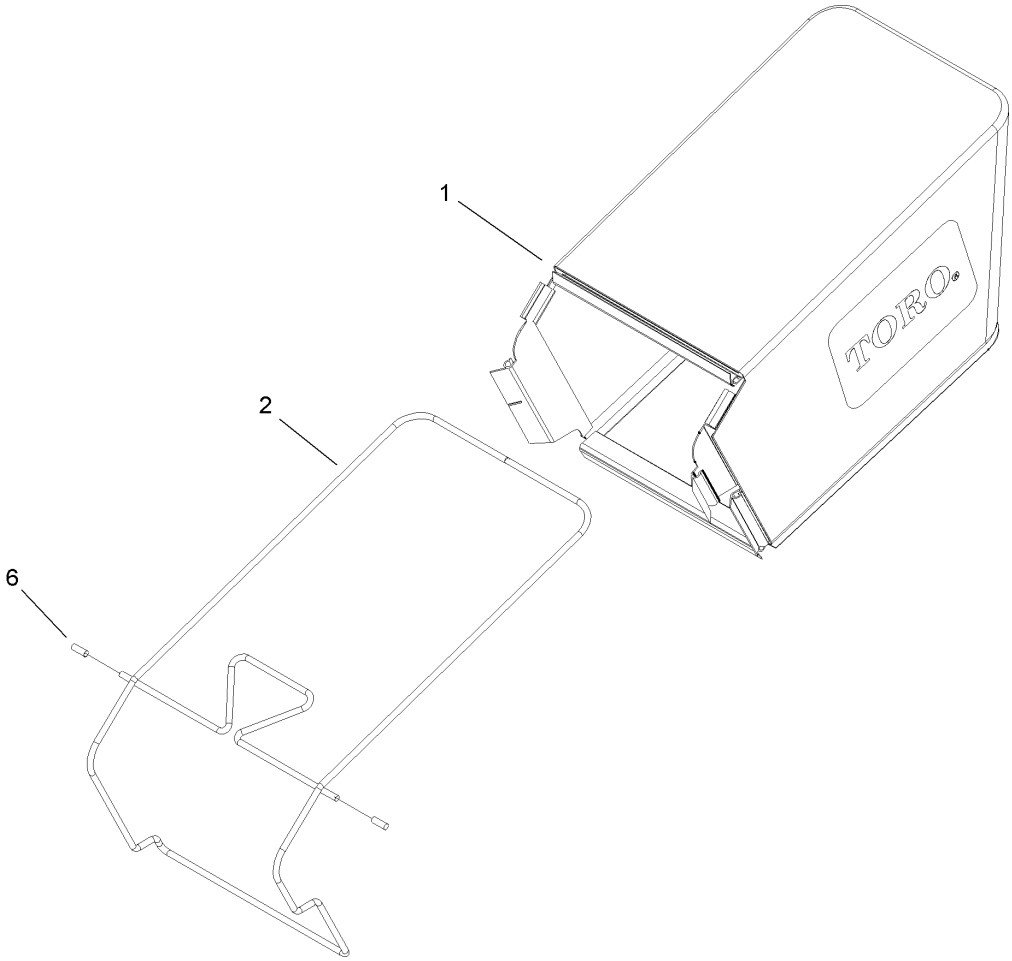


# Rear Bag Assembly

| Ref | Part No. | Qty. | Description |
|---|---|---|---|
| 1 | 108-9792 | 1 | Grass Bag ASM |
| 2 | 108-9785-03 | 1 | Frame-Bag |
| 6 | 112-6439 | 2 | Cap-End |

| | | | |
|---|---|---|---|
| | | | |

# Engine Assembly No. 1
# Tecumseh LV195XA-362086E

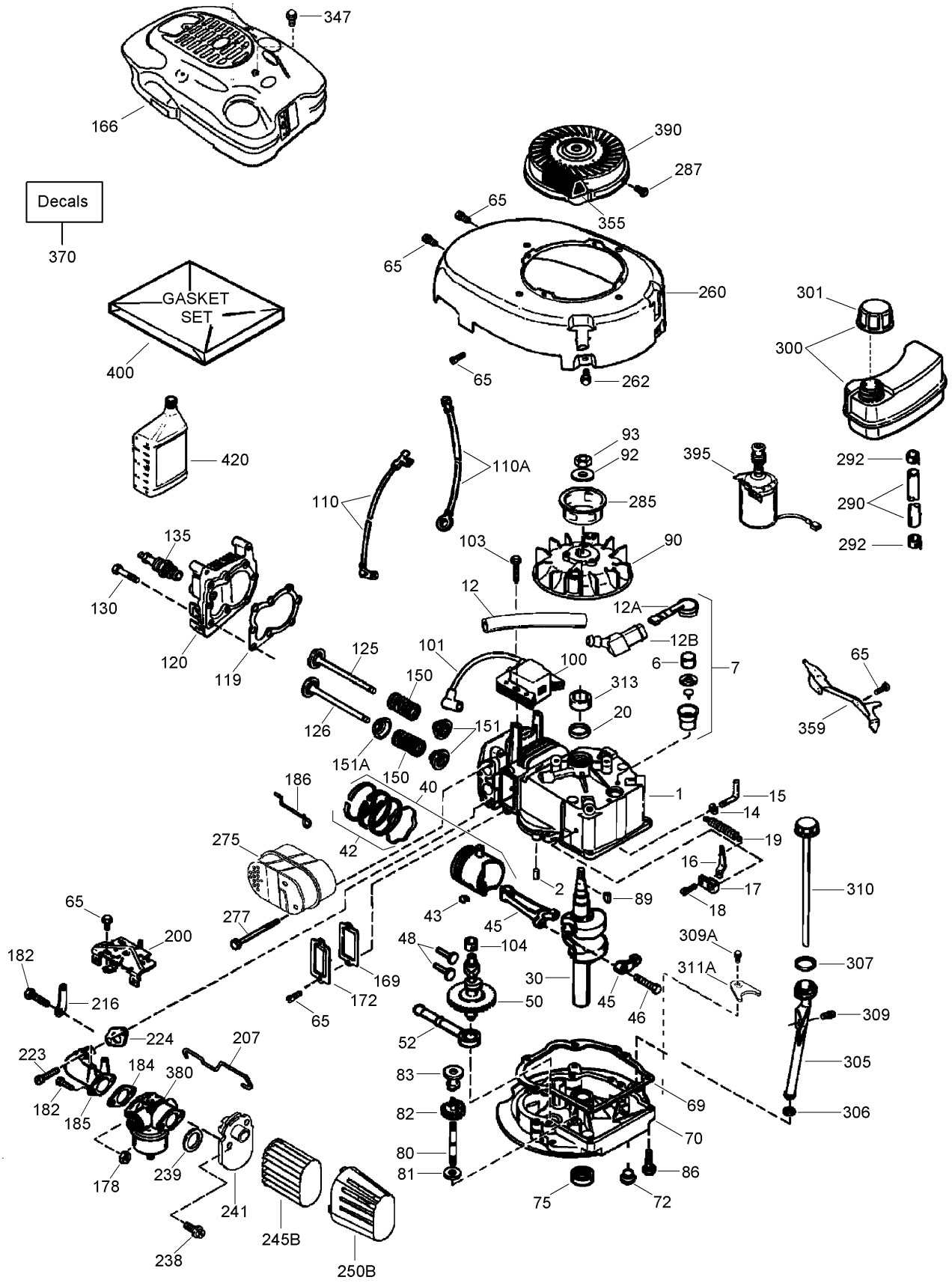

# Engine Assembly No. 1
# Tecumseh LV195XA-362086E

| Ref | Part No. | Qty. | Description |
|---|---|---|---|
| ❸1 | 37465 | 1 | Cylinder ASM (Includes 2, 20) |
| ❸2 | 26727 | 2 | Pin-Dowel |
| ❸6 | 33734 | 1 | Element-Breather |
| ❸7 | 36557 | 1 | Breather ASM (Includes 6, 12A) |
| ❸12 | 37944 | 1 | Tube-Breather |
| ❸12A | 36558 | 1 | Breather Cover And Tube ASM |
| ❸12B | 36694 | 1 | Elbow-Tube, Breather |
| ❸14 | 28277 | 1 | Washer-Flat |
| ❸15 | 30589 | 1 | Governor Rod ASM (Includes 14) |
| ❸16 | 34839A | 1 | Lever-Governor |
| ❸17 | 31335 | 1 | Clamp-Lever, Governor |
| ❸18 | 651018 | 1 | Screw (T-15, 8-32 X 19/64) |
| ❸19 | 36281 | 1 | Spring-Extension (Governor) |
| ❸20 | 32600 | 1 | Seal-Oil |
| ❸30 | 38001 | 1 | Crankshaft |
| ❸40 | 40045 | 1 | Piston, Pin And Ring Set (.010 O S) (Includes 42) |
| ❸40 | 40044 | 1 | Piston, Pin And Ring Set (STD) (Includes 42) |
| ❸42 | 40007 | 1 | Ring Set (.010 O S) |
| ❸42 | 40006 | 1 | Ring Set (STD) |
| ❸43 | 20381 | 2 | Ring-Retaining, Piston Pin |
| ❸45 | 36777 | 1 | Connecting Rod ASM (Includes 46) |
| ❸46 | 32610A | 2 | Bolt-Rod, Connecting |
| ❸48 | 27241 | 2 | Lifter-Valve |
| ❸50 | 37460 | 1 | Camshaft (Exhaust M C R) (Includes 104) |
| ❸52 | 29914 | 1 | Oil Pump ASM |
| ❸65 | 30200 | 6 | Screw (10-24 X 9/16) |
| ❸69 | 37609 | 1 | Gasket-Flange, Mounting |
| ❸70 | 37608A | 1 | Mounting Flange ASM (Includes 72-83, 306, 309A, 311A) |
| ❸72 | 37614 | 1 | Plug-Drain, Oil (Flush Mount) |
| ❸75 | 27897 | 1 | Seal-Oil |
| ❸80 | 30574A | 1 | Shaft-Governor |
| ❸81 | 30590A | 1 | Washer-Flat |
| ❸82 | 30591 | 1 | Governor Gear ASM (Includes 81) |
| ❸83 | 30588A | 1 | Spool-Governor |
| ❸86 | 650488 | 6 | Screw (1/4-20 X 1-1/4) |
| ❸89 | 611298 | 1 | Key-Flywheel |
| ❸90 | 611179 | 1 | Flywheel |
| ❸92 | 650815 | 1 | Washer-Belleville |
| ❸93 | 650816 | 1 | Nut-Flywheel |
| ❸100 | 34443C | 1 | Ignition-State, Solid |
| ❸101 | 610118 | 1 | Cover-Spark Plug |
| ❸103 | 651007 | 2 | Screw (T-15, 10-24 X 15/16) |
| ❸104 | 37480 | 1 | Bushing-Cam |
| ❸110 | 37682 | 1 | Wire-Ground |
| ❸110A | 36953 | 1 | Ground Wire (11.25 With Ring Terminal & Female Straight Terminal) |
| ❸119 | 37796 | 1 | Gasket-Head, Cylinder |

| Ref | Part No. | Qty. | Description |
|---|---|---|---|
| ❸120 | 37714 | 1 | Head-Cylinder |
| ❸125 | 37288 | 1 | Valve-Exhaust (STD) (Includes 151) |
| ❸126 | 37289 | 1 | Valve-Intake (STD) (Includes 151) |
| ❸130 | 6021A | 8 | Screw (5/16-18X1-1/2) |
| ❸135 | 35395 | 1 | Spark Plug-Resistor (R J19 L M) |
| ❸150 | 31672 | 2 | Spring-Valve |
| ❸151 | 31673 | 2 | Cap-Valve, Spring |
| ❸151A | 40017 | 1 | Seal-Valve, Intake |

# Engine Assembly No. 2
# Tecumseh LV195XA-362086E

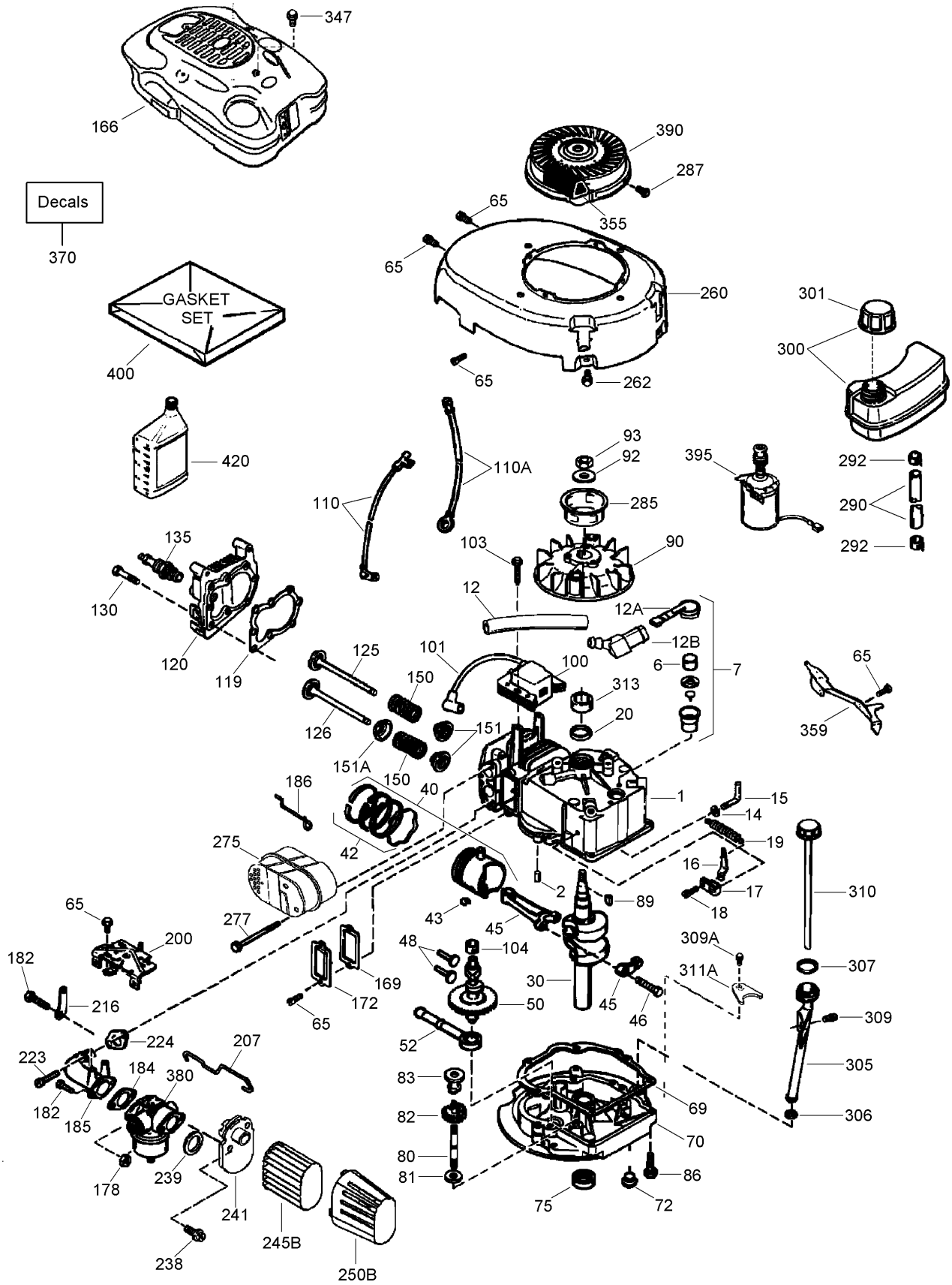

# Engine Assembly No. 2
# Tecumseh LV195XA-362086E

| Ref | Part No. | Qty. | Description |
|---|---|---|---|
| ❸166 | 38019 | 1 | Shroud-Engine |
| ❸169 | 36783 | 1 | Gasket-Cover, Valve |
| ❸172 | 36784 | 1 | Cover-Valve |
| ❸178 | 29752 | 2 | Nut And Lock Washer (1/4-28) |
| ❸182 | 6201 | 2 | Screw (1/4-28 X 7/8) |
| ❸184 | 26756 | 1 | Gasket |
| ❸185 | 37466 | 1 | Pipe-Intake |
| ❸186 | 32653 | 1 | Link-Governor |
| ❸200 | 37876 | 1 | Bracket-Control |
| ❸207 | 34336A | 1 | Link-Throttle |
| ❸216 | 33086 | 1 | Lever-Adjusting, R P M |
| ❸223 | 650451 | 2 | Screw (1/4-20 X 1) |
| ❸224 | 36786 | 1 | Gasket-Pipe, Intake |
| ❸238 | 650932 | 2 | Screw (10-32 X 49/64) |
| ❸239 | 34338 | 1 | Gasket-Cleaner, Air |
| ❸241 | 36919 | 1 | Collar-Cleaner, Air |
| ❸245B | 36905 | 1 | Filter-Air Cleaner (Paper) |
| ❸250B | 37122 | 1 | Cover-Cleaner, Air |
| ❸260 | 37693A | 1 | Housing-Blower |
| ❸262 | 650831 | 4 | Screw (1/4-20 X 1/2) |
| ❸275 | 37498 | 1 | Muffler |
| ❸277 | 650988 | 2 | Screw (1/4-20 X 2-9/32) |
| ❸285 | 35000A | 1 | Cup-Starter |
| ❸287 | 650926 | 2 | Screw (8-32 X 21/64) |
| ❸290 | 37962 | 1 | Line-Fuel, Low Permeation (8.62) |
| ❸292 | 26460 | 2 | Clamp-Line, Fuel |
| ❸300 | 37947 | 1 | Fuel Tank ASM (Includes 292, 301) |
| ❸301 | 37844 | 1 | Cap-Fuel (Black) (1-1/2 I D) |
| ❸305 | 35647A | 1 | Tube-Fill, Oil |
| ❸306 | 37610 | 1 | O-Ring |
| ❸307 | 35499 | 1 | O-Ring |
| ❸309 | 650562 | 1 | Screw (10-32 X 1/2) |
| ❸309A | 650783 | 1 | Screw (10-24 X 3/4) |
| ❸310 | 35648 | 1 | Dipstick |
| ❸311A | 37611 | 1 | Bracket-Holddown |
| ❸313 | 34080 | 1 | Spacer |
| ❸347 | 650898A | 4 | Screw (10-32 X 27/32) |
| ❸355 | 590701 | 1 | Handle-Starter (STD) |
| ❸359 | 38026 | 1 | Flywheel Guard |
| ❸370 | 35977 | 1 | Decal-Caution (Read Operator Manual) |
| ❸370 | 37695 | 1 | Decal-Primer (3X Complete Instructions) |
| ❸380 | 640350 | 1 | Carburetor ASM (Includes 184) |
| ❸390 | 590739 | 1 | Rewind Starter ASM |
| ❸395 | 35707 | 1 | Motor-Starter, Electric (12 Volt) |
| ❸400 | 37613A | 1 | Gasket Set |
| ❸420 | 730225A | 1 | Oil-Engine (4-Cycle Sae 30) |
| ❶❸0 | 805189A | 1 | Engine-Replacement |
| ❶❸0 | 750837D | 1 | Shortblock-Replacement |

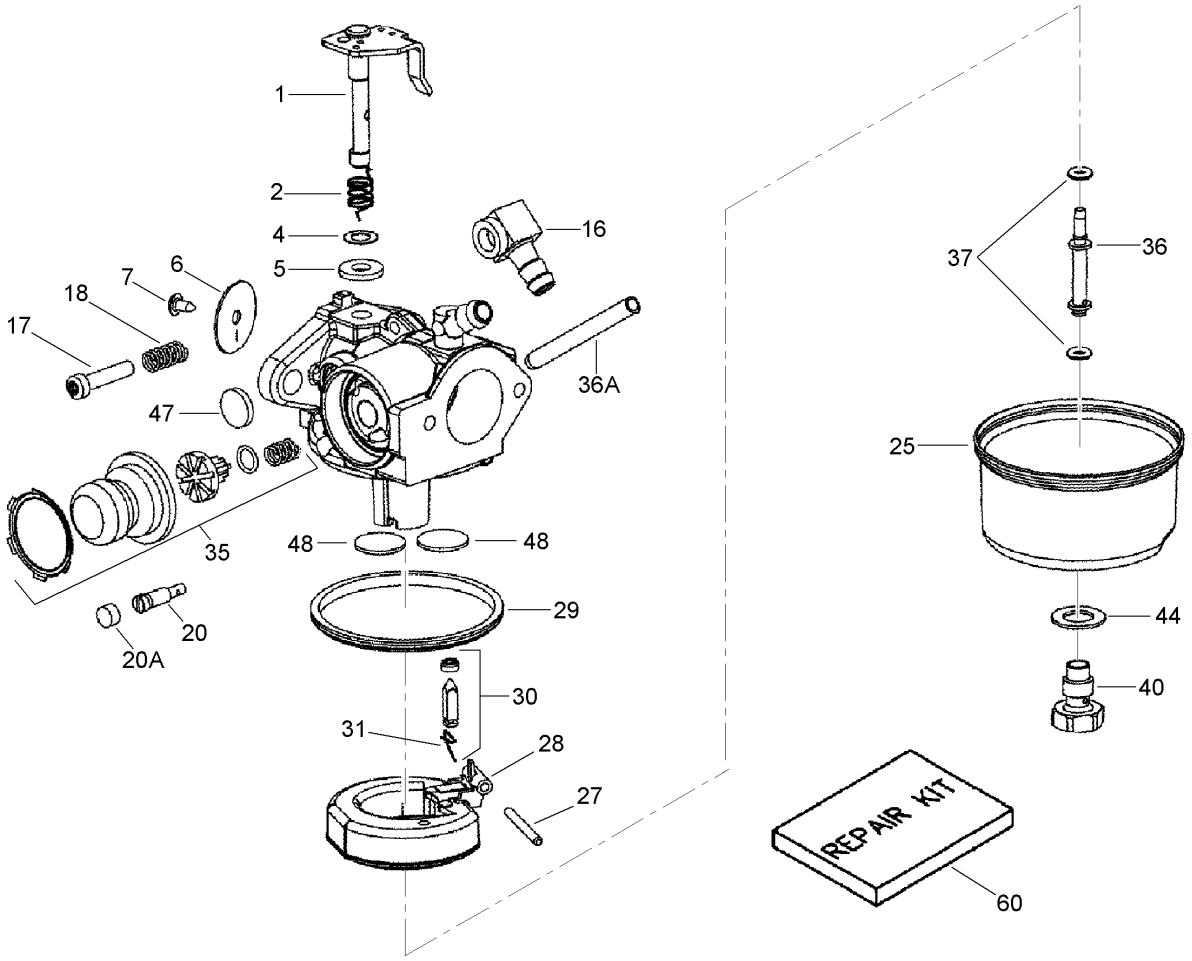


# Carburetor Assembly No. 640350
# Tecumseh LV195XA-362086E

| Ref | Part No. | Qty. | Description |
|---|---|---|---|
| ❸0 | 640350 | 1 | Carburetor ASM |
| ❸1 | 631615 | 1 | Throttle Shaft And Lever ASM |
| ❸2 | 631767 | 1 | Spring-Return, Throttle |
| ❸❹4 | 631184 | 1 | Washer-Seal, Dust |
| ❸❹5 | 631183 | 1 | Seal-Dust |
| ❸6 | 640070 | 1 | Shutter-Throttle |
| ❸❹7 | 650506 | 1 | Screw-Shutter |
| ❸16 | 631807 | 1 | Fitting-Fuel |
| ❸17 | 651025 | 1 | Screw-Throttle Crack And Idle Speed |
| ❸18 | 630766 | 1 | Spring-Tension |
| ❸20 | 640016 | 1 | Screw-Restrictor, Idle |
| ❸20A | 640200 | 1 | Cap-Screw, Restrictor Idle |
| ❸25 | 631867 | 1 | Bowl-Float (No Drain) |
| ❸❹27 | 631024 | 1 | Shaft-Float |
| ❸28 | 632802 | 1 | Float (Plastic) |
| ❸❹29 | 631028 | 1 | O Ring-Bowl, Float |
| ❸❹30 | 631021A | 1 | Inlet Needle, Seat And Clip ASM (Includes 31) |
| ❸31 | 631022 | 1 | Clip-Spring |
| ❸35 | 640351 | 1 | Primer Bulb And Valve Repair Kit |
| ❸36 | 640080 | 1 | Tube-Nozzle, Main |
| ❸36A | 632766 | 1 | Tube-Carburetor |
| ❸❹37 | 632547 | 2 | O-Ring |

| Ref | Part No. | Qty. | Description |
|---|---|---|---|
| ❸40 | 640030 | 1 | Nut-Bowl, High Speed |
| ❸❹44 | 27110A | 1 | Washer-Nut, Bowl |
| ❸❹47 | 630748 | 1 | Plug-Welch, Idle Mixture Well |
| ❸❹48 | 631027 | 2 | Plug-Welch, Atmospheric Vent |
| ❸60 | 632760B | 1 | Carburetor Repair Kit |

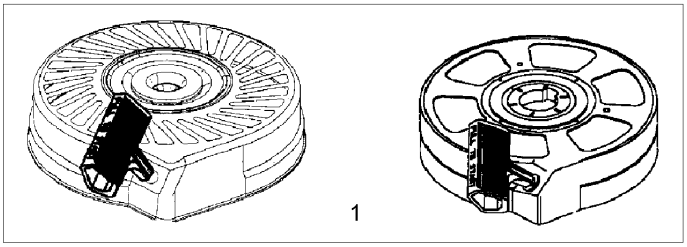


This illustratation may not depict actual equipment and is for reference purposes only

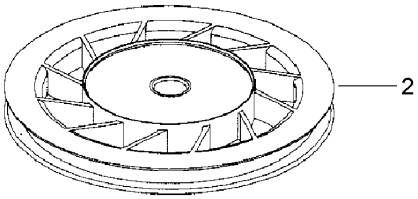


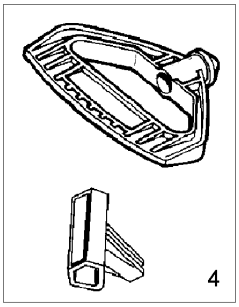


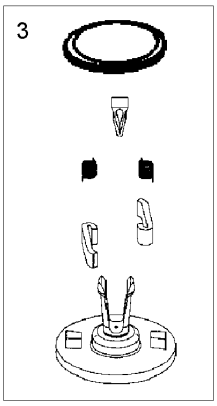


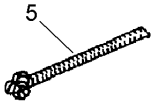


# Rewind Starter Assembly No. 590739
# Tecumseh LV195XA-362086E

| Ref | Part No. | Qty. | Description |
|---|---|---|---|
| ❸1 | 590739 | 1 | Rewind Starter ASM |
| ❸2 | 590618A | 1 | Pulley And Rewind Spring ASM |
| ❸3 | 590772 | 1 | Repair Kit |
| ❸4 | 590701 | 1 | Handle-Starter (STD) |
| ❸5 | 590535 | 1 | Rope-Starter (98 Cut To Length) |

| | | | |
|---|---|---|---|

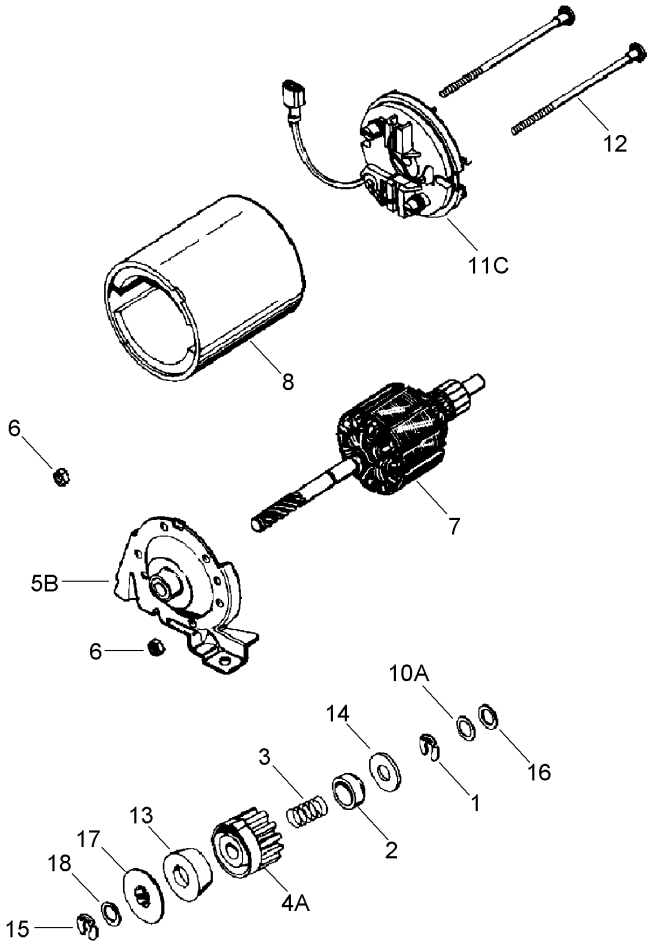


# Electric Starter Assembly No. 35707
# Tecumseh LV195XA-362086E

| Ref | Part No. | Qty. | Description |
|---|---|---|---|
| ❸0 | 35707 | 1 | Motor-Starter, Electric (12 Volt) |
| ❸1 | 34955 | 1 | Ring-Retaining |
| ❸2 | 34950 | 1 | Retainer-Spring |
| ❸3 | 34954 | 1 | Spring |
| ❸4A | 34949A | 1 | Gear |
| ❸5B | 34943 | 1 | Drive End Cap ASM |
| ❸6 | 33450 | 2 | Nut-Lock |
| ❸7 | 34944 | 1 | Armature |
| ❸8 | 34945 | 1 | Housing ASM |
| ❸10A | 590500 | 1 | Washer-Thrust |
| ❸11C | 34942 | 1 | Commutator End Cap ASM (Includes Brushes) |
| ❸12 | 34947 | 2 | Bolt (10-32 X 3-3/16) |
| ❸13 | 34946 | 1 | Driver-Pinion |
| ❸14 | 34951 | 1 | Washer-Cup |
| ❸15 | 34952 | 1 | Ring-Retaining |
| ❸16 | 34948 | 1 | Washer |
| ❸17 | 34953 | 1 | Nut-Drive |
| ❸18 | 590608 | 1 | Washer |

# Attachments and Accessories

## For 20076 - 22in Recycler Lawn Mower

| Product Name | Model/Part |
|---|---|
| Traction Assist Handle Kit | 108-8120 |
| Tuneup Kit | 20235 |
| Replacement Bag | 59303 |
| Bagger Kit | 59304 |
| 22 Inch Blade Kit | 59534 |

TORO®