Form Number 3357-583 Rev C

22in Recycler® Lawn Mower

Model No. 20076A - 270000001 and up.

Parts Catalog

Ordering Replacement Parts
To order replacement parts, please supply the part number, the quantity, and the description of each part desired.

Understanding Reference Numbers
Each Identified part in an illustration has a reference number. The reference number for a part also appears in the parts list, along with other information about the part.

This catalog uses two special reference number formats, one to indicate parts in a service assembly and another to indicate the quantity of a given part in an illustration.

Service Assembly Reference Numbers
Parts in service assemblies have reference numbers in the form a:b. The a represents the reference number of the entire service assembly and the b represents a sequential number unique to each part within the service assembly.

For example, a wheel assembly might be identified by reference number 6, the tire by 6:1, the valve by 6:2, and the wheel by 6:3. When you order the assembly identified by reference number 6, you receive all parts identified by reference numbers 6:1, 6:2, and 6:3. However, you may also order any part individually. Reference numbers of this type appear in illustrations and in part lists.

Reference Numbers Indicating Quantity
In an illustration, if a reference number indicates more than one part, the reference number has the form nX y. The n represents the quantity of the part, the X is the multiplication symbol, and the y represents the reference number.

For example, in an illustration, the reference number 2X 37 means that two of the parts identified by reference number 37 are indicated.

Register your product at www.Toro.com

© The Toro Company - 2008
All Rights Reserved

Contents

Description	Page
Deck, Side Chute and Rear Door Assembly	3
Front Axle Assembly	4
Rear Axle Assembly	5
Rear Axle and Transmission Assembly	6
Transmission Assembly No. 106-3956	7
Engine Assembly	8
Handle Assembly	9
Electric Start Assembly	10
Rear Bag Assembly	11
Engine Assembly No. 1 Tecumseh LV195EA-362086D	12
Engine Assembly No. 2 Tecumseh LV195EA-362086D	14
Carburetor Assembly No. 640350 Tecumseh LV195EA-362086D	16
Recoil Starter Assembly No. 590702 Tecumseh LV195EA-362086D	17
Electric Starter Assembly No. 35707 Tecumseh LV195EA-362086D	18
Attachments and Accessories List	19

Part Description Abbreviations

Part descriptions in this catalog may include the following abbreviations.

AR	as required
ASM	assembly
BBC	blade brake clutch
CARR	carriage
DEG	degrees
EXT	external
FH	flat head
GA	gauge
HD	heavy-duty
HF	hex flange
HH	hex head
HHF	hex head flange
HHFTF	hex head flange thread forming
HJ	hex jam
HLH	hex lag head
HOC	height-of-cut
HSBH	hex socket button head
HSFH	hex socket flat head
HSH	hex socket head
HWH	hex washer head
HWHTF	hex washer head thread forming
HYD	hydraulic
LH	left hand
NI	nylon insert
NPTF	national pipe thread fine
PFH	phillips flat head
PPH	phillips pan head
PPHTF	phillips pan head thread forming
PRH	phillips round head
PTH	phillips truss head
PTO	power-take-off
RH	right hand
ROPS	roll-over protection system
SFH	slotted fillister head
SHH	slotted hex head
SHWH	slotted hex washer head
SPH	slotted pan head
SQH	square head
SRH	slotted round head
STD	standard
TAP	self tapping
TTH	torx truss head

Footnotes

❶ Not illustrated

❷ Not serviced separately

❸ Obtain from your local Tecumseh dealer

❹ Included in Repair Kit 632760B

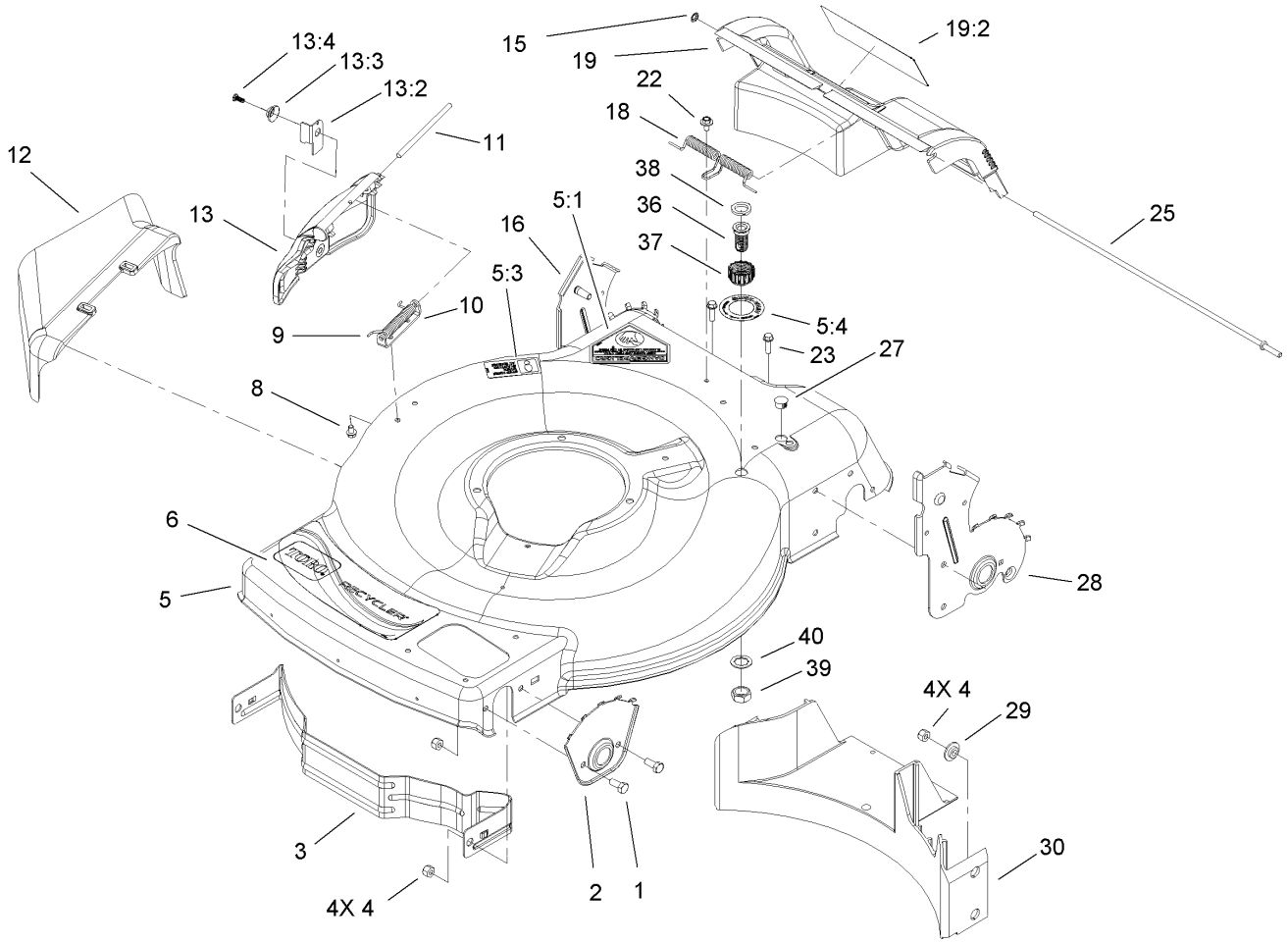

Deck, Side Chute and Rear Door Assembly

Ref	Part No.	Qty.	Description
1	322-3	4	Screw-HH
2	105-1808-03	2	Plate-HOC, Front
3	104-8694-03	1	Baffle-Front
4	3296-29	8	Nut-Lock, NI
5	112-8854	1	BBC Housing ASM
5:1	94-8072	1	Decal-Danger
5:3	108-8117	1	Decal
5:4	112-8867	1	Decal
6	114-0321	1	Decal
8	99-8445	2	Screw-HWH
9	99-5293	1	Spring-Torsion
10	112-6416	1	Bracket-Cover
11	99-5291	1	Rod-Cover
12	105-3028	1	Chute-Discharge, Side
13	106-8376	1	Discharge Door ASM
13:2	107-0795	1	Latch-Door
13:3	107-7456	1	Cap-Door
13:4	107-7461	1	Screw-Plastite
15	32112-6	1	Nut-Push
16	112-6441	1	8 Inch RH HOC Plate ASM
18	105-3032	1	Spring-Door, Rear
19	112-8864	1	Rear Door ASM
19:2	105-1295	1	Decal-Warning
22	46-6810	1	Screw And Washer ASM

Ref	Part No.	Qty.	Description
23	46-8091	2	Screw-HWH
25	105-1827	1	Rod-Pivot, Rear Door
27	104-9369	1	Plug-Dome
28	112-6443	1	8 Inch LH HOC Plate ASM
29	105-3006	4	Washer-Stepped
30	105-1834	1	Baffle-Rear
36	112-6400	1	Port-Washout
37	112-6401	1	Coupling-Hose, Washout Port
38	112-6438	1	Washer-Seal, Washout Port
39	3218-6	1	Nut-Jam
40	3254-5	1	Washer-Tooth

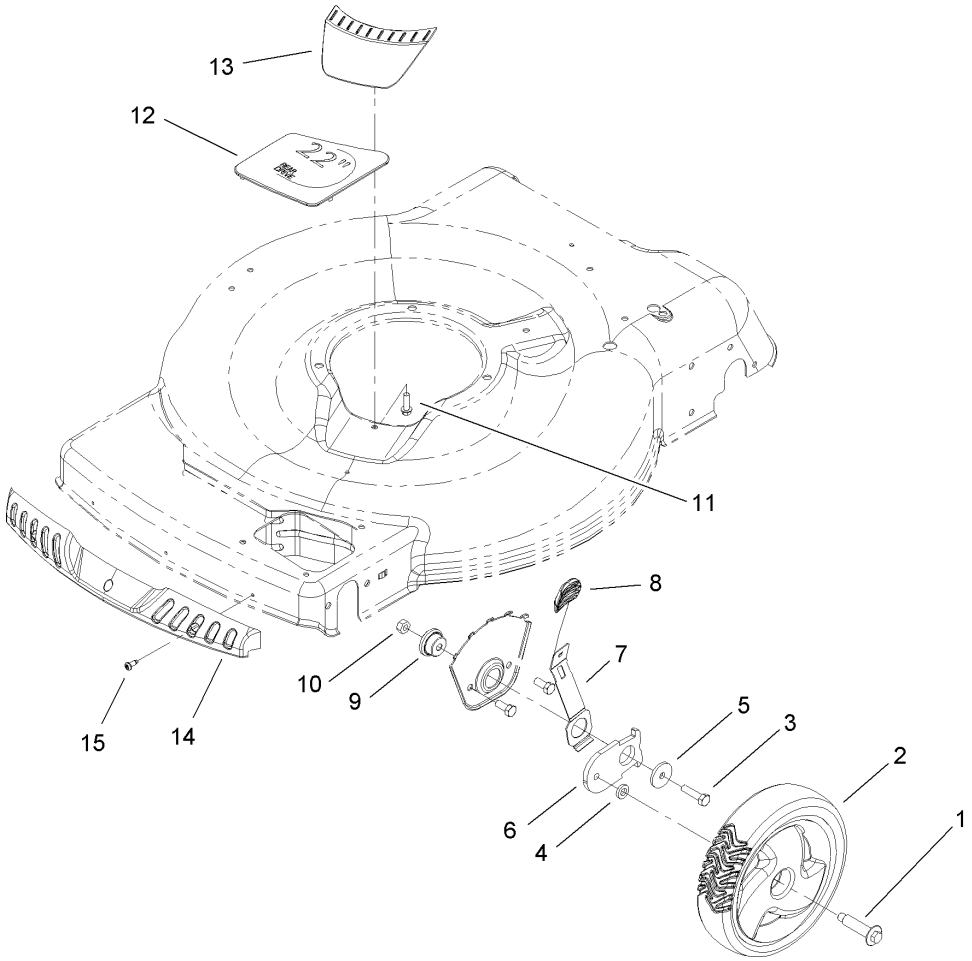

Front Axle Assembly

Ref	Part No.	Qty.	Description
1	614650	2	Bolt-Shoulder
2	105-1814	2	Wheel ASM
3	322-6	2	Screw-HH
4	110-7466	2	Washer-Bolt, Wheel
5	105-3048	2	Washer-Flat
6	105-1807	2	Arm-Pivot, Front
7	105-1809	2	Arm-Spring
8	105-3042	2	Knob-Lever, HOC
9	105-1818	2	Bushing-Mount, HOC
10	3296-29	2	Nut-Lock, NI
11	46-8091	1	Screw-HWH
12	105-3004	1	Cover-Cutout
13	105-3005	1	Cover-Belt Opening
14	104-9359	1	Bumper-Mower
15	105-6849	3	Screw-Thread Forming

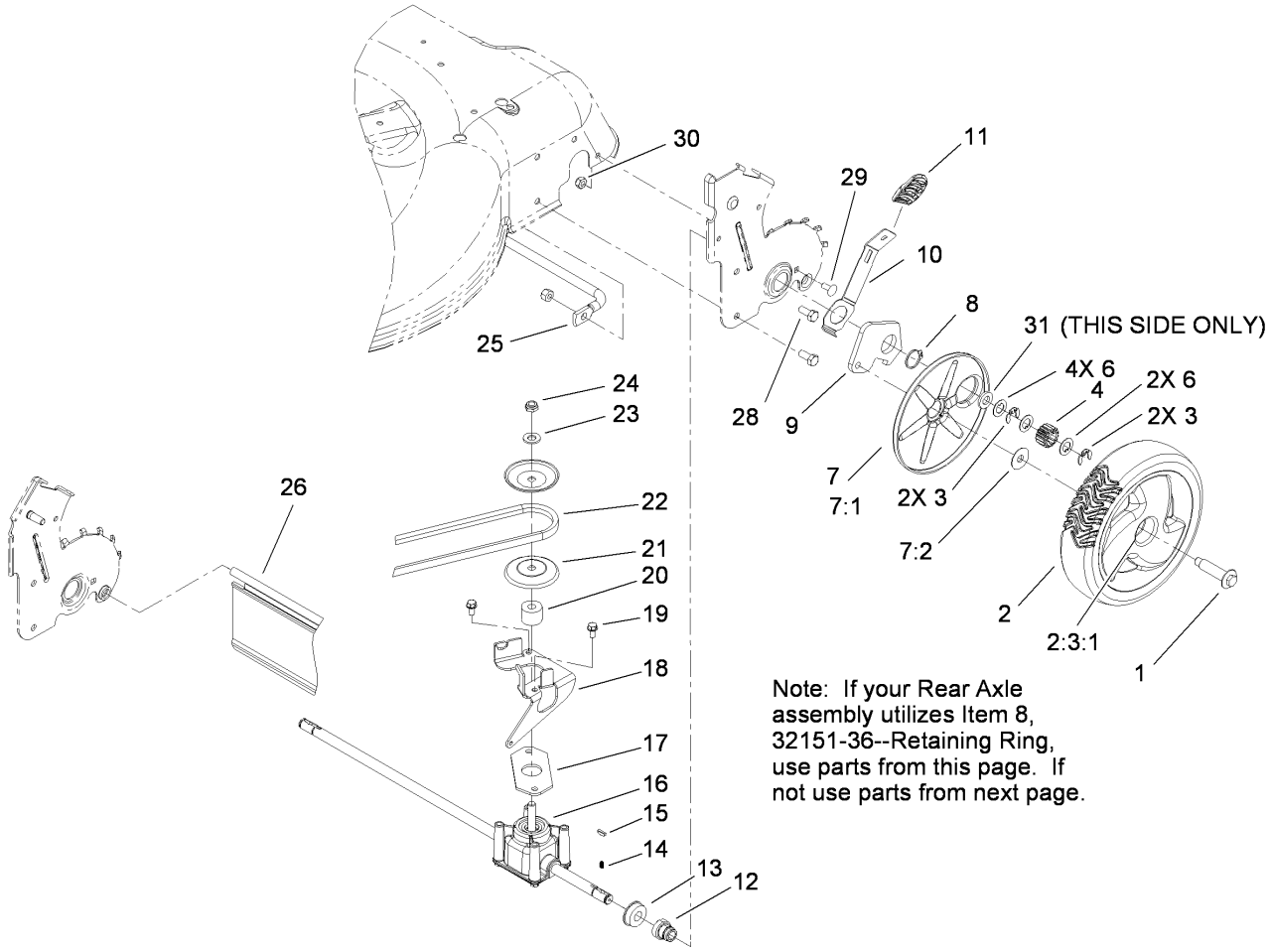

Rear Axle Assembly

Ref	Part No.	Qty.	Description
1	614650	2	Bolt-Shoulder
2	105-3036	2	Wheel Gear ASM
❶❷2:3		1	Wheel ASM
2:3:1	27-6250	2	Bushing
3	65-2720	4	Ring-Clip, Locking
4	105-3040	2	Gear-Pinion, 15T
6	105-6840	6	Washer-Thrust
7	110-1792	2	Wheel Cover ASM
❷7:1		1	Cover-Wheel
7:2	614426	1	Washer-Stepped
8	32151-36	2	Ring-Retaining
9	105-1819	2	Arm-Pivot, Rear
10	105-1809	2	Arm-Spring
11	105-3042	2	Knob-Lever, HOC
12	104-8698	2	Retainer-Bearing, HOC
13	104-8699	2	Bearing-Ball
14	39-9650	2	Spring-Compression
15	612066	2	Key
16	106-3956	1	Transmission ASM
17	108-9756	1	Gasket-Gearbox
18	106-6809-03	1	Bracket-Pivot
19	32144-4	2	Screw-HWH
20	92-5791	1	Spacer
21	100-1176	2	Pulley-Half

Ref	Part No.	Qty.	Description
22	91-2258	1	V-Belt
23	3256-24	1	Washer-Flat
24	3296-5	1	Nut-Lock
25	105-1811	1	Brace-Plate, HOC
26	114-1585	1	Shield-Trailing
28	322-6	4	Screw-HH
29	3229-11	2	Screw-CARR
30	3296-16	2	Nut-Lock, NI
31	36-4780	1	Washer-Plain

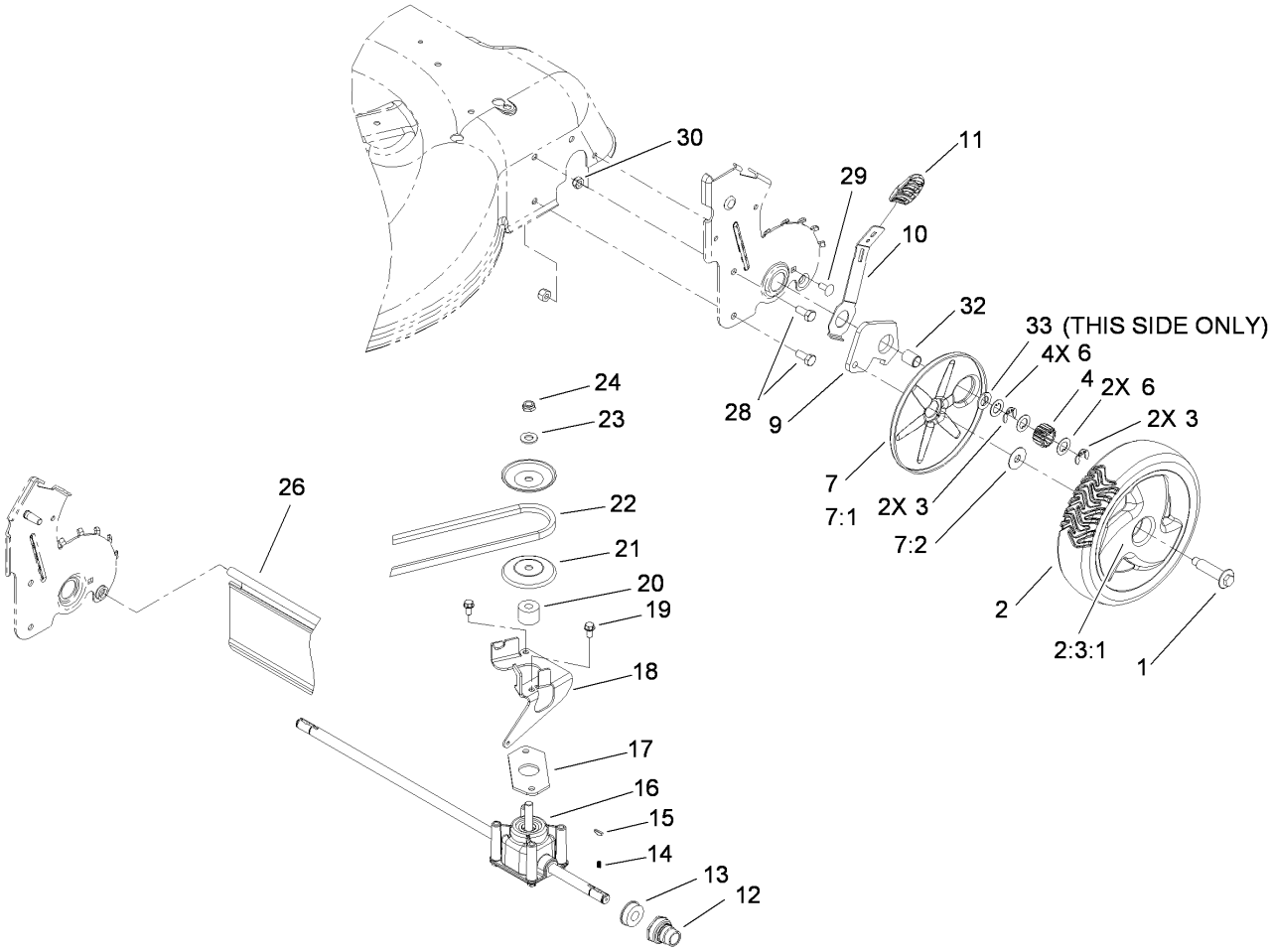

Rear Axle and Transmission Assembly

Ref	Part No.	Qty.	Description
1	614650	2	Bolt-Shoulder
2	105-3036	2	Wheel Gear ASM
❶❷2:3		1	Wheel ASM
2:3:1	27-6250	2	Bushing
3	65-2720	4	Ring-Clip, Locking
4	105-3040	2	Gear-Pinion, 15T
6	105-6840	6	Washer-Thrust
7	110-1792	2	Wheel Cover ASM
❷7:1		1	Cover-Wheel
7:2	614426	1	Washer-Stepped
9	108-9781	2	Arm-Pivot, Rear
10	108-9780	2	Arm-Spring
11	105-3042	2	Knob-Lever, HOC
12	108-9779	2	Retainer-Bushing, HOC
13	104-8699	2	Bearing-Ball
14	39-9650	2	Spring-Compression
15	612066	2	Key
16	106-3956	1	Transmission ASM
17	108-9756	1	Gasket-Gearbox
18	106-6809-03	1	Bracket-Pivot
19	32144-4	2	Screw-HWH
20	92-5791	1	Spacer
21	100-1176	2	Pulley-Half
22	91-2258	1	V-Belt

Ref	Part No.	Qty.	Description
23	3256-24	1	Washer-Flat
24	3296-5	1	Nut-Lock
26	114-1585	1	Shield-Trailing
28	322-6	4	Screw-HH
29	3229-11	2	Screw-CARR
30	3296-16	2	Nut-Lock, NI
32	108-9782	2	Bushing-Sleeve
33	110-7191	1	Washer-Thrust

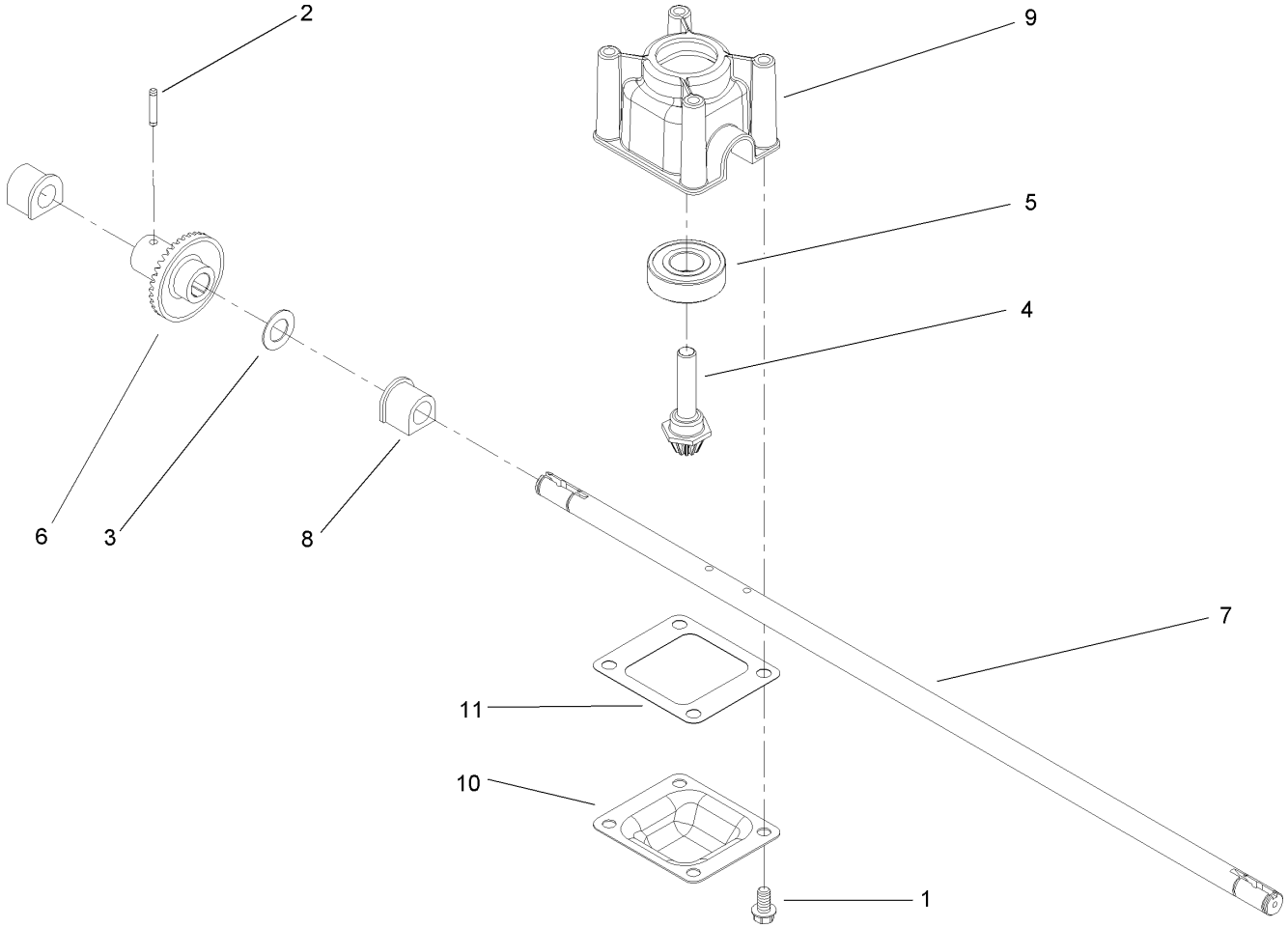

Transmission Assembly No. 106-3956

Ref	Part No.	Qty.	Description
1	32144-4	4	Screw-HWH
2	105-6817	1	Pin-Groove
3	36-4780	1	Washer-Plain
4	92-5790	1	Pinion
5	100-1048	1	Bearing-Ball
6	104-8671	1	Gear-Bevel, 37T
7	106-3957	1	Shaft-Output
8	104-8673	2	Bushing-Shaft, Output
9	104-8674	1	Gearcase-Upper
10	104-8675-03	1	Cover-Gearcase
11	105-6839	1	Gasket-Gearcase

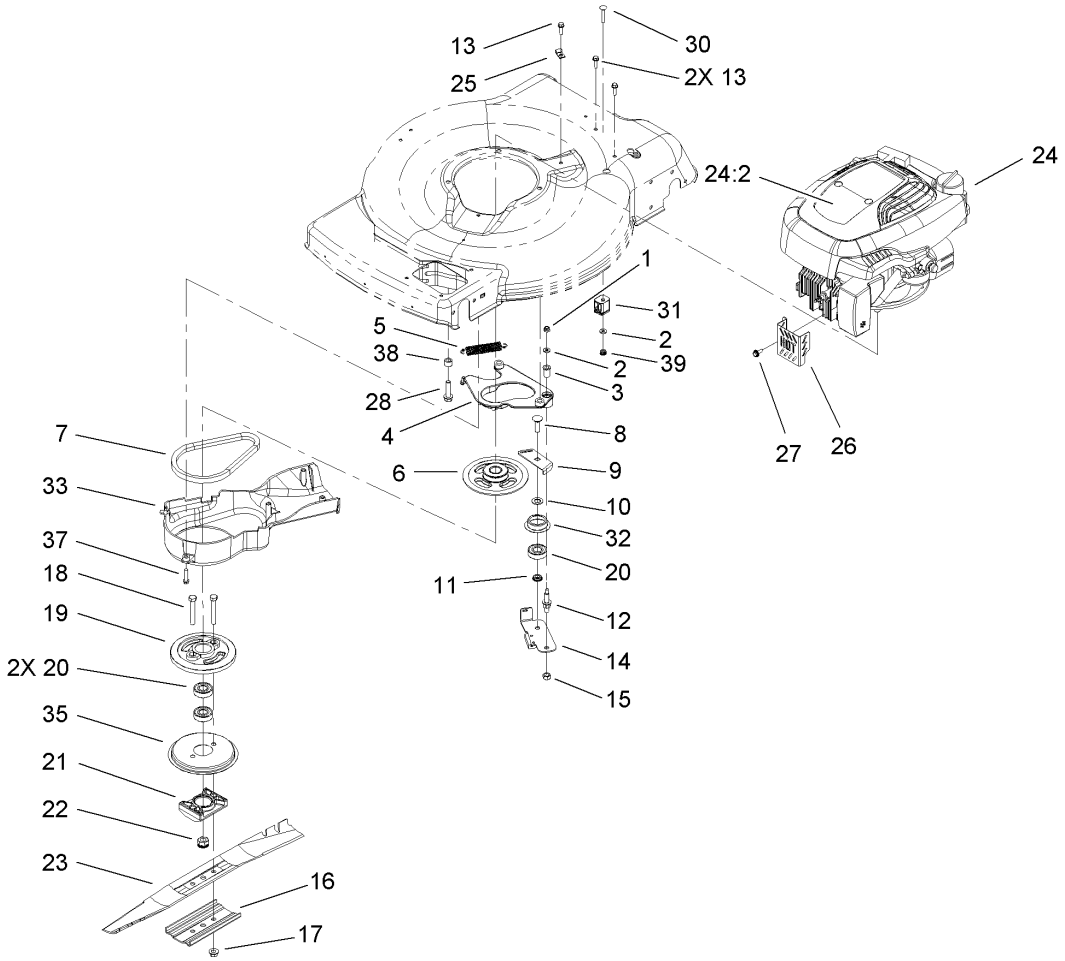

Engine Assembly

Ref	Part No.	Qty.	Description
1	3296-73	1	Nut-Lock, NI
2	3256-16	2	Washer-Flat
3	107-0797	1	Bushing
4	108-9341	1	Plate-Anchor
5	108-3792	1	Spring-Tension, Brake
6	110-7456	1	Pulley
7	110-1790	1	Belt-BBC
8	3231-25	1	Screw-CARR
9	107-7471	1	Plate-Guide
10	605256	1	Washer
11	107-0758	1	Spacer-Bearing
12	107-0759	1	Bolt-Shoulder
13	46-8091	3	Screw-HWH
14	107-7477	1	Brake Arm ASM
15	603773	2	Nut
16	108-3766-03	1	Support-Blade
17	54-9190	2	Nut-Lock
18	3211-42	2	Screw-HH
19	107-0754	1	Drum
20	100-1048	3	Bearing-Ball
21	107-7487	1	Support-Blade
22	108-9342	1	Nut-Hex
23	108-9764-03	1	Blade-22 Inch

Ref	Part No.	Qty.	Description
❷❸24		1	Engine-Tecumseh, Lv195Ea-362086D
24:2	112-8874	1	Decal-Shroud, Engine
25	2412-72	1	Clip-Closed, Insulated
26	106-8346-03	1	Guard-Muffler
27	32144-85	3	Screw-HWH
28	32144-102	3	Screw-HWH
30	3229-4	1	Screw-CARR
31	106-6801	1	Anchor-Cable, BBC
32	108-3790	1	Retainer-Belt
33	107-0798	1	Cover-BBC
35	108-3787	1	Disc
37	46-8092	1	Screw-Plastite
38	100-6447	1	Tube-Spacer
39	3296-56	1	Nut-Lock, NI

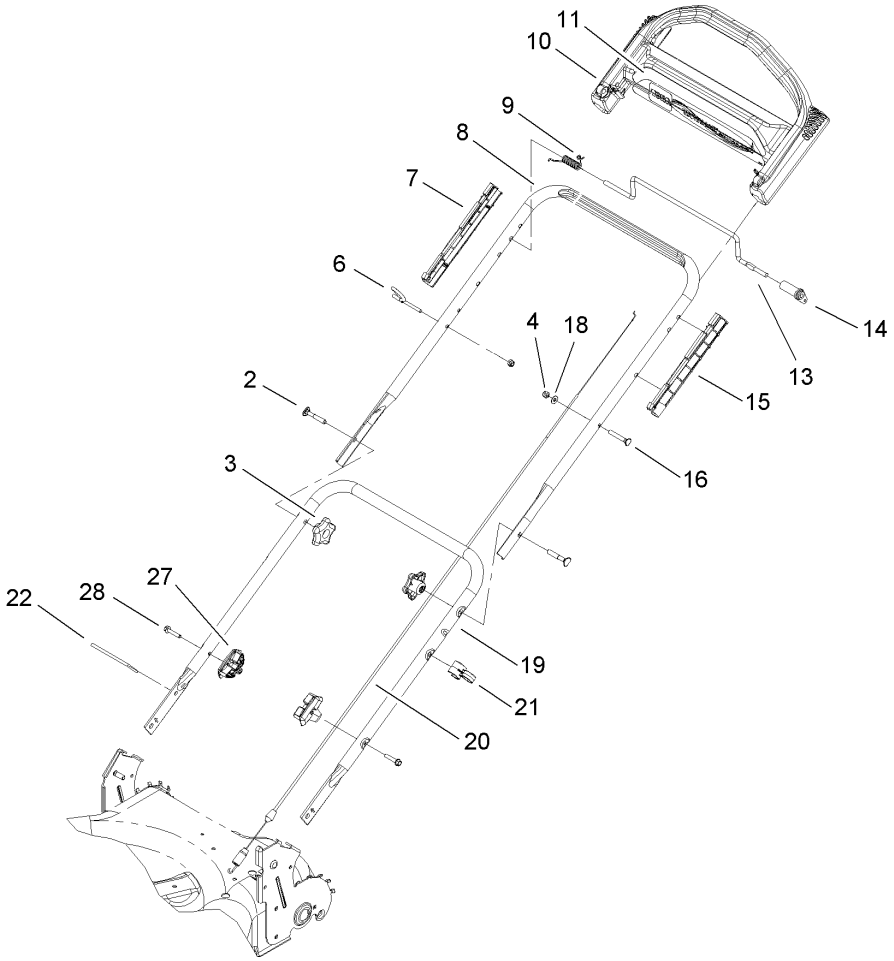

Handle Assembly

Ref	Part No.	Qty.	Description
2	112-8876	2	Screw-Handle
3	108-8162	2	Knob-Locking
4	3296-73	2	Nut-Lock, NI
6	86-9671	1	Guide-Rope
7	105-6841	2	Guide-RH
8	104-8680-05	1	Handle-Upper
9	104-8690	1	Spring-Torsion
10	104-8678	1	Handle-Control
11	114-0338	1	Decal
13	99-1588	1	Bar-Control, Traction
14	99-1589	1	Lever-Traction
15	105-6842	2	Guide-LH
16	321-50	1	Screw-HH
18	3256-1	1	Washer-Flat
19	112-6440-05	1	Handle-Lower
20	105-1844	1	Cable-Traction
21	106-6805	1	Guide-Cable
22	614249	1	Strap-Tie
27	108-9788	2	Anchor-Bag
28	32144-110	2	Screw-HWH

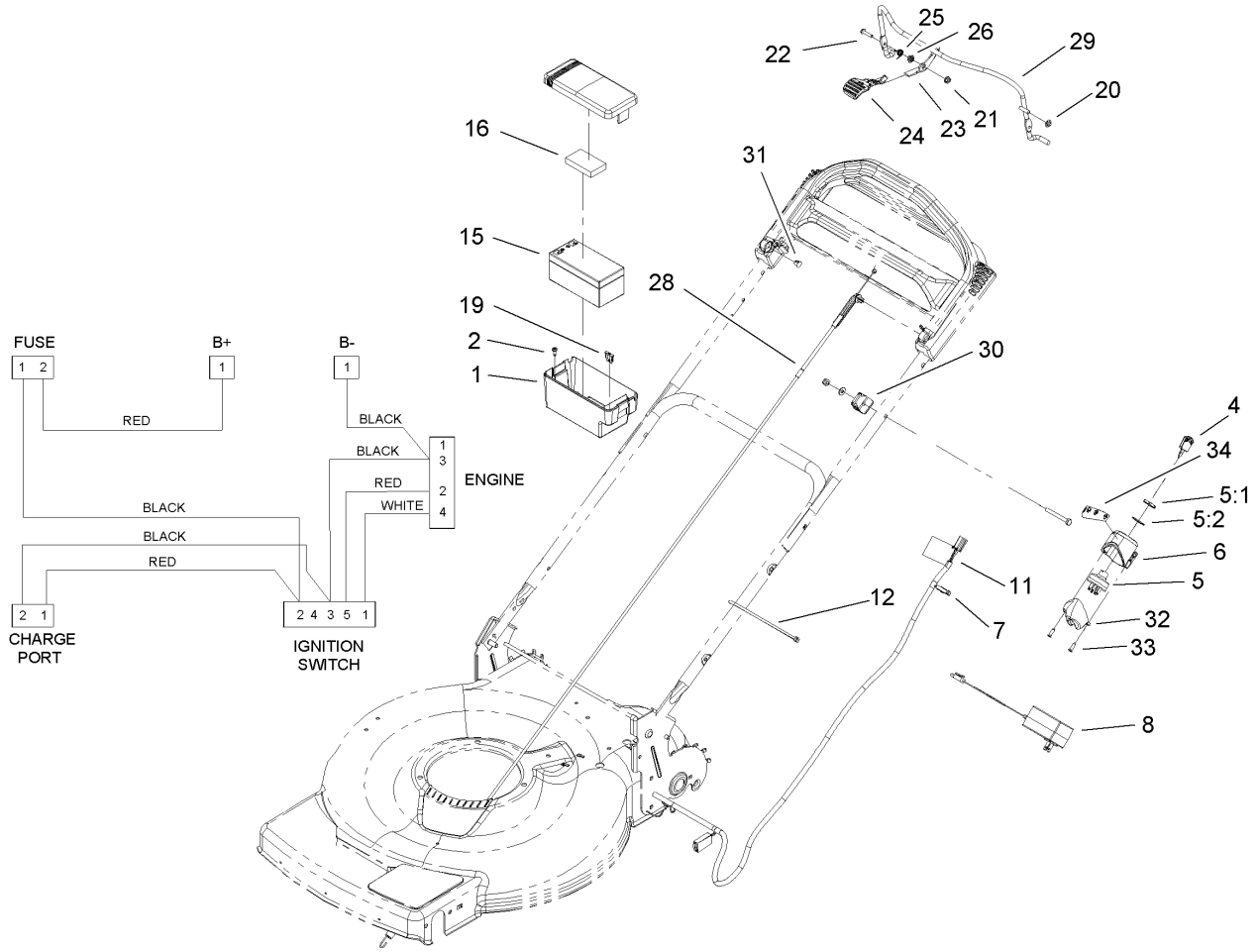

Electric Start Assembly

Ref	Part No.	Qty.	Description
1	108-4844	1	Battery Box ASM
2	105-6849	2	Screw-Thread Forming
4	700918	1	Key
5	23-0660	1	Switch-Starter
5:1	218-461	1	Nut-HH
5:2	3254-5	1	Washer-Tooth
6	108-3795	1	Housing-Key Switch
7	110-1618	1	Harness-Wire
8	108-8190	1	Charger-Battery, 12 Volt
11	104-7953	1	Decal-Harness
12	614249	2	Strap-Tie
15	106-8397	1	Battery-12 Volt
16	107-3774	1	Foam-Battery, Top
19	99-6124	2	Fuse-40 Amp
20	3290-337	1	Nut-Speed
21	32128-17	1	Nut-Lock, Flange
22	106-9169	1	Screw
23	106-6802	1	Lever
24	112-8884	1	Knob-BBC
25	107-7462	1	Spring-Torsion
26	107-7463	1	Spacer
28	107-0799	1	Cable ASM
29	108-3788	1	Bail-Brake
30	92-7729	1	Anchor-Cable, Upper

Ref	Part No.	Qty.	Description
31	104-9368	1	Plug-Dome
32	108-3796	1	Cvr-Swtch M04
33	32144-111	2	Screw-PPH
34	108-9751	1	Decal-Switch, Ignition

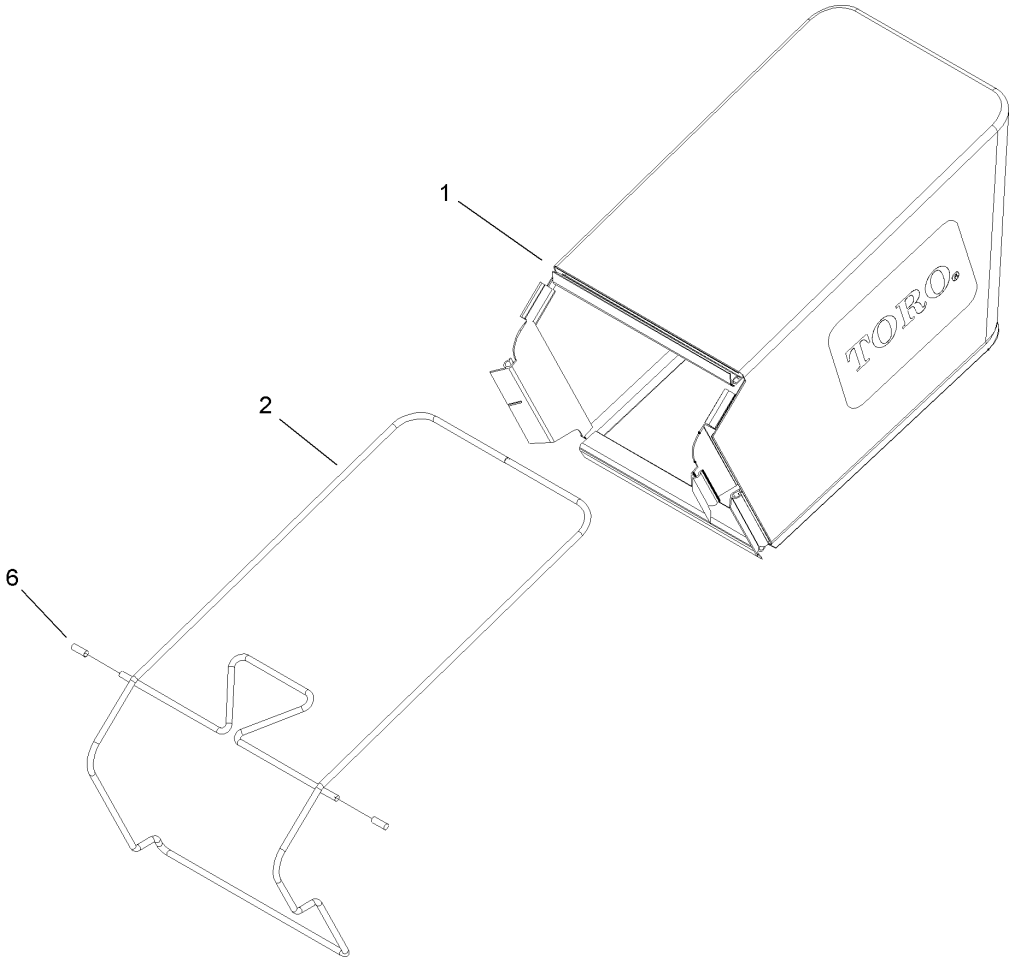

Rear Bag Assembly

Ref	Part No.	Qty.	Description
1	108-9792	1	Grass Bag ASM
2	108-9785-03	1	Frame-Bag
6	112-6439	2	Cap-End

Engine Assembly No. 1
Tecumseh LV195EA-362086D

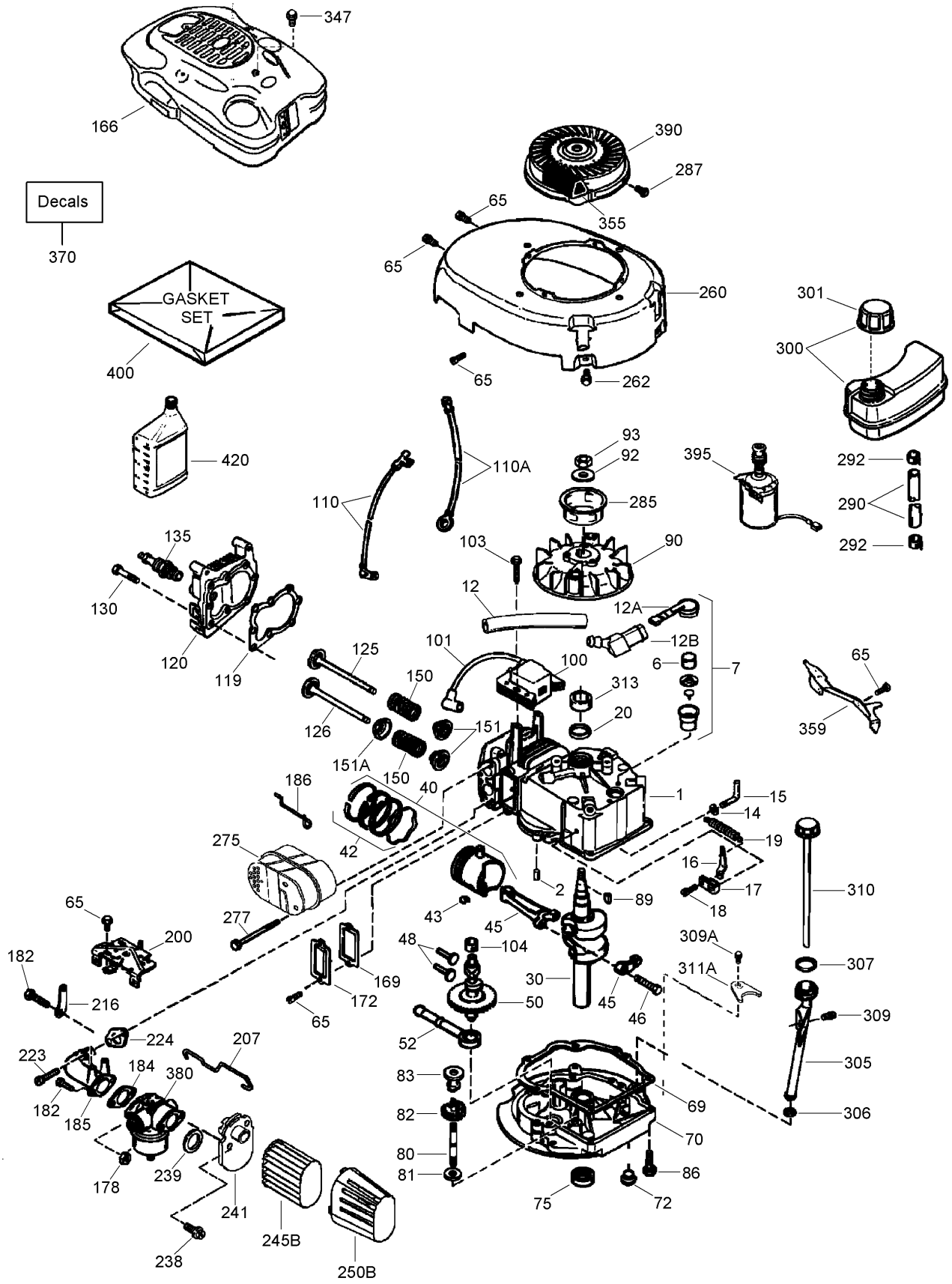

Engine Assembly No. 1
Tecumseh LV195EA-362086D

Ref	Part No.	Qty.	Description
❸1	37465	1	Cylinder ASM (Includes 2, 20)
❸2	26727	2	Pin-Dowel
❸6	33734	1	Element-Breather
❸7	36557	1	Breather ASM (Includes 6, 12A)
❸12	37944	1	Tube-Breather
❸12A	36558	1	Breather Cover And Tube ASM
❸12B	36694	1	Elbow-Tube, Breather
❸14	28277	1	Washer-Flat
❸15	30589	1	Governor Rod ASM (Includes 14)
❸16	34839A	1	Lever-Governor
❸17	31335	1	Clamp-Lever, Governor
❸18	651018	1	Screw (T-15, 8-32 X 19/64)
❸19	36281	1	Spring-Extension
❸20	32600	1	Seal-Oil
❸30	38001	1	Crankshaft
❸40	40044	1	Piston, Pin And Ring Set (STD) (Includes 42)
❸40	40045	1	Piston, Pin And Ring Set (.010 Os) (Includes 42)
❸42	40006	1	Ring Set (STD)
❸42	40007	1	Ring Set (.010 O S)
❸43	20381	2	Ring-Retaining, Piston Pin
❸45	36777	1	Connecting Rod ASM (Includes 46)
❸46	32610A	2	Bolt-Rod, Connecting
❸48	27241	2	Lifter-Valve
❸50	37460	1	Camshaft (Exhaust M C R) (Includes 104)
❸52	29914	1	Oil Pump ASM
❸65	30200	6	Screw (10-24 X 9/16)
❸69	37609	1	Gasket-Flange, Mounting
❸70	37608A	1	Mounting Flange ASM (Includes 72-83, 306, 309A, 311A)
❸72	37614	1	Plug-Drain, Oil (Flush Mount)
❸75	27897	1	Seal-Oil
❸80	30574A	1	Shaft-Governor
❸81	30590A	1	Washer-Flat
❸82	30591	1	Governor Gear ASM (Includes 81)
❸83	30588A	1	Spool-Governor
❸86	650488	6	Screw (1/4-20 X 1-1/4)
❸89	611298	1	Key-Flywheel
❸90	611179	1	Flywheel
❸92	650815	1	Washer-Belleville
❸93	650816	1	Nut-Flywheel
❸100	34443C	1	Ignition-State, Solid
❸101	611289	1	Cover-Spark Plug
❸103	651007	2	Screw (T-15, 10-24 X 15/16)
❸104	37480	1	Bushing-Cam
❸110	37682	1	Wire-Ground
❸110A	36953	1	Ground Wire ASM (11.25) With Ring Terminal And Female Straight Terminal
❸119	37796	1	Gasket-Head, Cylinder

Ref	Part No.	Qty.	Description
❸120	37714	1	Head-Cylinder
❸125	37288	1	Exhaust Valve (STD) (Includes 151)
❸126	37289	1	Intake Valve (STD) (Includes 151)
❸130	6021A	8	Screw (5/16-18X1-1/2)

Engine Assembly No. 2
Tecumseh LV195EA-362086D

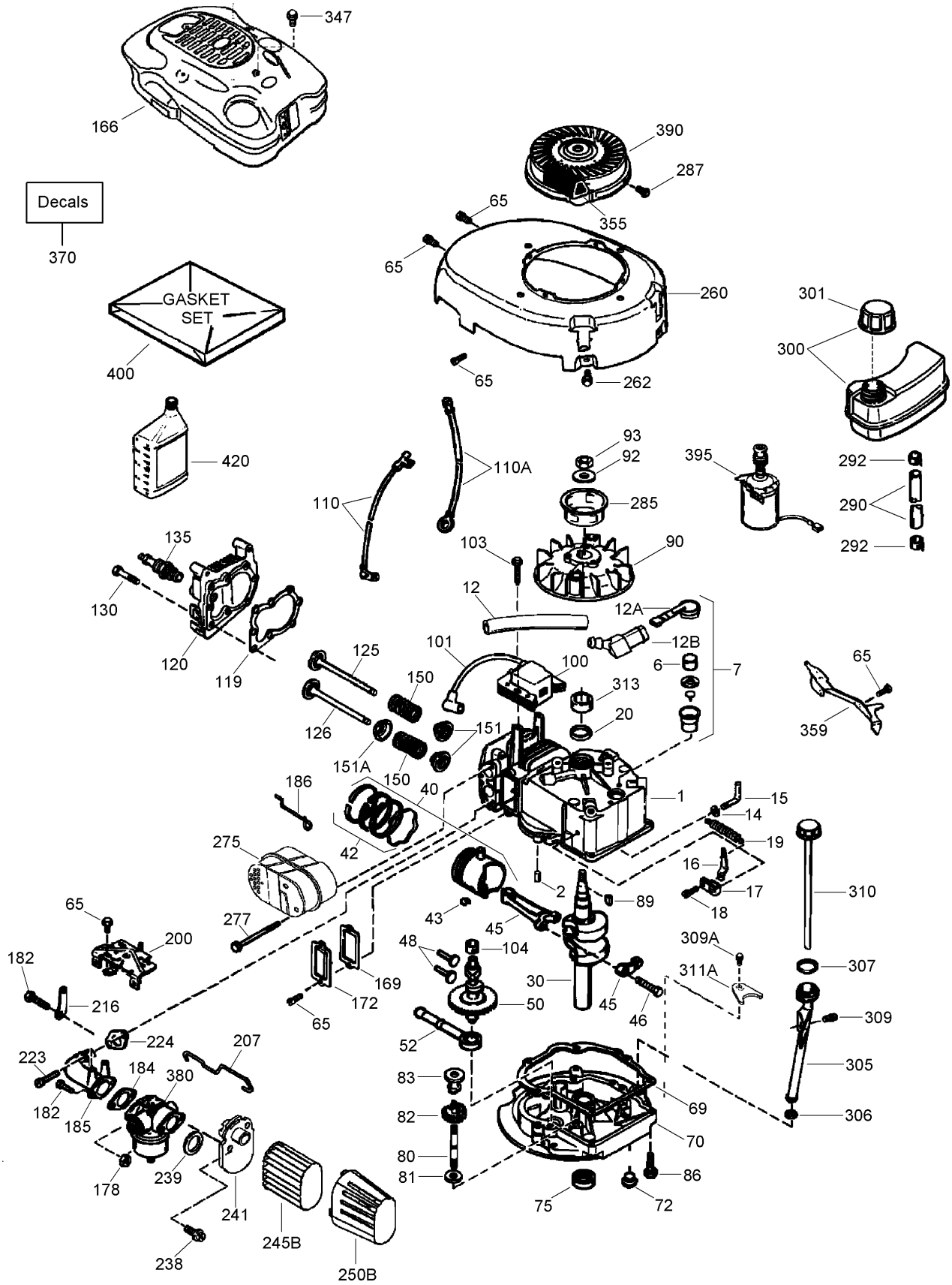

Engine Assembly No. 2
Tecumseh LV195EA-362086D

Ref	Part No.	Qty.	Description
❸135	35395	1	Spark Plug-Resistor (R J19 L M)
❸150	31672	2	Spring-Valve
❸151	31673	2	Cap-Valve, Spring
❸151A	40017	1	Seal-Valve, Intake
❸166	38019	1	Shroud-Engine
❸169	36783	1	Gasket-Cover, Valve
❸172	36784	1	Cover-Valve
❸178	29752	2	Nut And Lock Washer (1/4-28)
❸182	6201	2	Screw (1/4-28 X 7/8)
❸184	26756	1	Gasket
❸185	37466	1	Pipe-Intake
❸186	32653	1	Link-Governor
❸200	37876	1	Bracket-Control
❸207	34336A	1	Link-Throttle
❸216	33086	1	Lever-Adjusting, R P M
❸223	650451	2	Screw (1/4-20 X 1)
❸224	36786	1	Gasket-Pipe, Intake
❸238	650932	2	Screw (10-32 X 49/64)
❸239	34338	1	Gasket-Cleaner, Air
❸241	36919	1	Collar-Cleaner, Air
❸245B	36905	1	Filter-Air Cleaner (Paper)
❸250B	37122	1	Cover-Cleaner, Air
❸260	37693A	1	Housing-Blower
❸262	650831	4	Screw (1/4-20 X 1/2)
❸275	37498	1	Muffler
❸277	650988	2	Screw (1/4-20 X 2-9/32)
❸285	35000A	1	Cup-Starter
❸287	650926	2	Screw (8-32 X 21/64)
❸290	37962	1	Line-Fuel, Low Permeation (8.62)
❸292	26460	2	Clamp-Line, Fuel
❸300	37947	1	Fuel Tank ASM (Includes 292, 301)
❸301	37844	1	Cap-Fuel (Black) (1-1/2 I D)
❸305	35647A	1	Tube-Fill, Oil
❸306	37610	1	O-Ring
❸307	35499	1	O-Ring
❸309	650562	1	Screw (10-32 X 1/2)
❸309A	650783	1	Screw (10-24 X 3/4)
❸310	35648	1	Dipstick
❸311A	37611	1	Bracket-Holddown
❸313	34080	1	Spacer
❸347	650898A	4	Screw (10-32 X 27/32)
❸355	590701	1	Handle-Starter (STD)
❸359	36646	1	Flywheel Guard
❸370	37695	1	Decal-Primer
❸370	35977	1	Decal-Warning
❸380	640350	1	Carburetor ASM
❸390	590702	1	Starter-Recoil
❸395	35707	1	Motor-Starter, Electric (12 Volt)
❸400	37613A	1	Gasket Set
❸420	730225A	1	Oil-Engine (4-Cycle Sae 30)

Ref	Part No.	Qty.	Description
❶❸999	730277	1	Summer Maintenance Kit (Includes Sae 30 Oil)
❸0	750891	1	Short Block Replacement

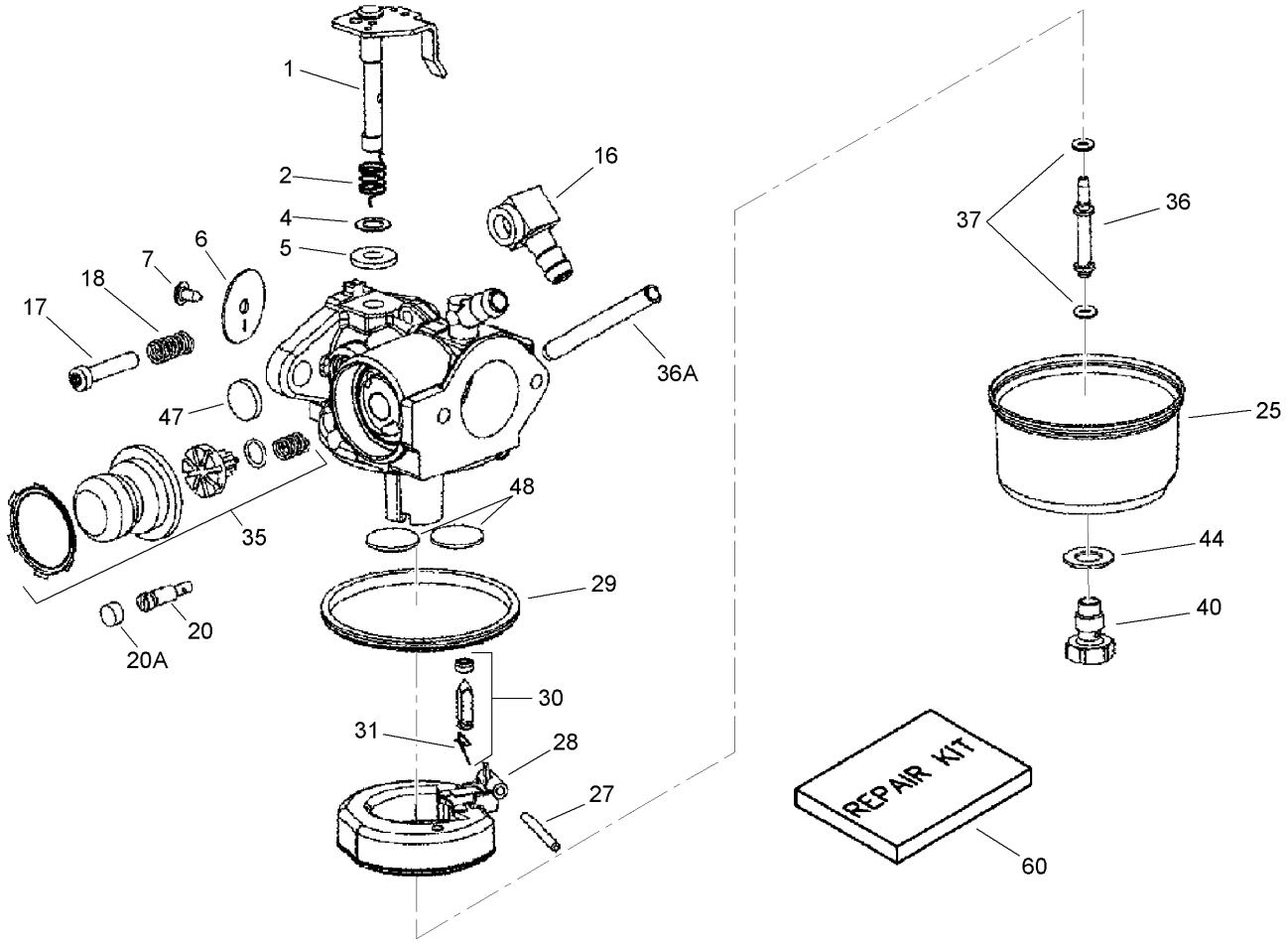

Carburetor Assembly No. 640350
Tecumseh LV195EA-362086D

Ref	Part No.	Qty.	Description
❸0	640350	1	Carburetor ASM
❸1	631615	1	Throttle Shaft And Lever ASM
❸2	631767	1	Spring-Return, Throttle
❸❹4	631184	1	Washer-Seal, Dust
❸❹5	631183	1	Seal-Dust
❸6	640070	1	Shutter-Throttle
❸❹7	650506	1	Screw-Shutter
❸16	631807	1	Fitting-Fuel
❸17	651025	1	Screw-Throttle Crack And Idle Speed
❸18	630766	1	Spring-Tension
❸20	640016	1	Screw-Restrictor, Idle
❸20A	640200	1	Cap-Screw, Restrictor Idle
❸25	631867	1	Bowl-Float (No Drain)
❸❹27	631024	1	Shaft-Float
❸28	632802	1	Float (Plastic)
❸❹29	631028	1	O Ring-Bowl, Float
❸❹30	631021A	1	Inlet Needle, Seat And Clip ASM (Includes 31)
❸31	631022	1	Clip-Spring
❸35	640351	1	Primer Bulb And Valve Repair Kit
❸36	640080	1	Tube-Nozzle, Main
❸36A	632766	1	Tube-Carburetor
❸❹37	632547	2	O-Ring

Ref	Part No.	Qty.	Description
❸40	640030	1	Nut-Bowl, High Speed
❸❹44	27110A	1	Washer-Nut, Bowl
❸❹47	630748	1	Plug-Welch, Idle Mixture Well
❸❹48	631027	2	Plug-Welch, Atmospheric Vent
❸60	632760B	1	Carburetor Repair Kit

This illustratation may not depict actual equipment and is for reference purposes only

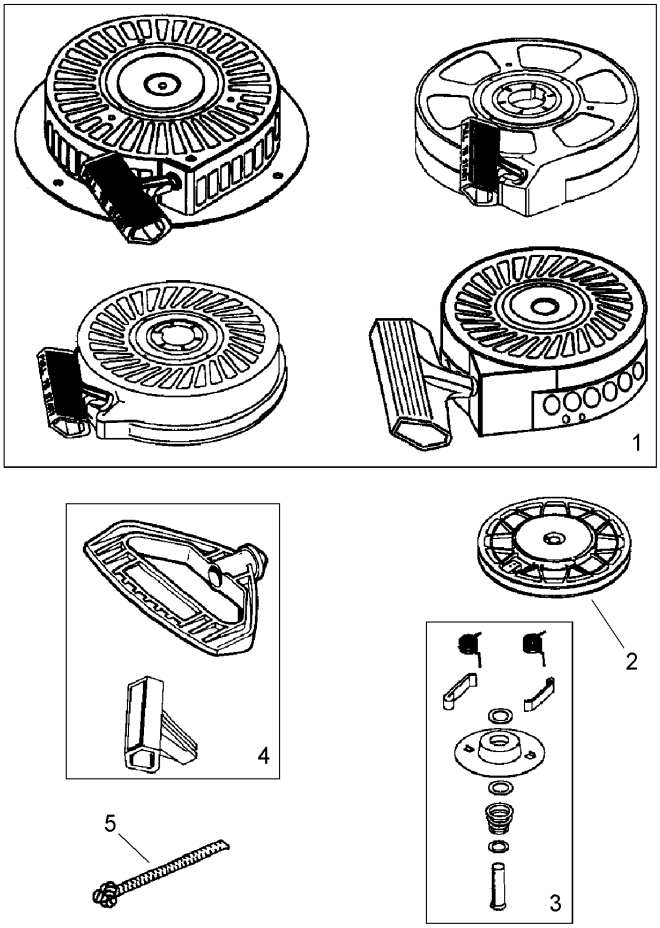

Recoil Starter Assembly No. 590702
Tecumseh LV195EA-362086D

Ref	Part No.	Qty.	Description
❸1	590702	1	Starter-Recoil
❸2	590700	1	Pulley And Rewind Spring ASM
❸3	590774	1	Repair Kit
❸4	590701	1	Handle-Starter (STD)
❸5	590535	1	Rope-Starter (98 Cut To Length)

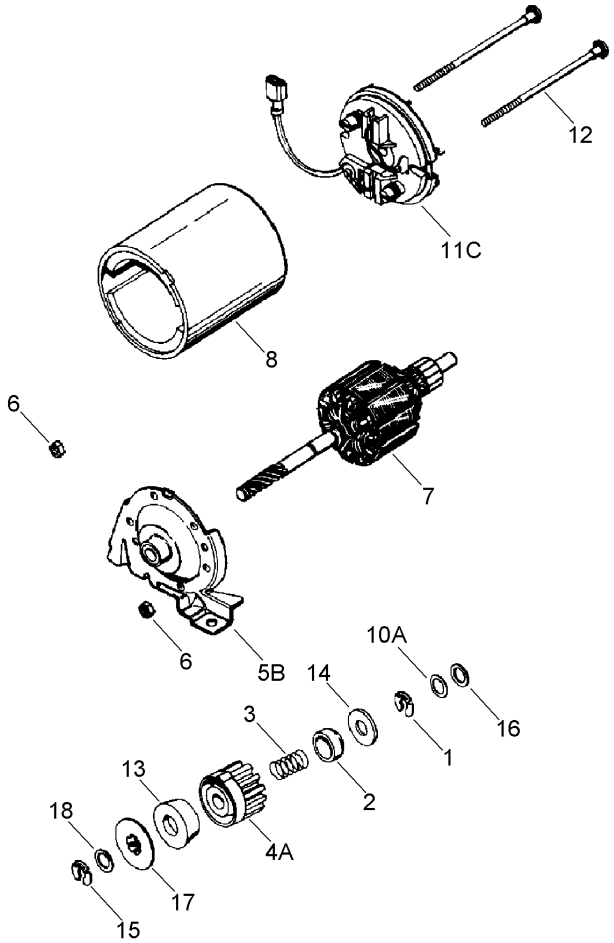

Electric Starter Assembly No. 35707
Tecumseh LV195EA-362086D

Ref	Part No.	Qty.	Description
❸0	35707	1	Motor-Starter, Electric (12 Volt)
❸1	34955	1	Ring-Retaining
❸2	34950	1	Retainer-Spring
❸3	34954	1	Spring
❸4A	34949A	1	Gear
❸5B	34943	1	Drive End Cap ASM
❸6	33450	2	Nut-Lock
❸7	34944	1	Armature
❸8	34945	1	Housing ASM
❸10A	590500	1	Washer-Thrust
❸11C	34942	1	Commutator End Cap ASM (Includes Brushes)
❸12	34947	2	Bolt (10-32 X 3-3/16)
❸13	34946	1	Driver-Pinion
❸14	34951	1	Washer-Cup
❸15	34952	1	Ring-Retaining
❸16	34948	1	Washer
❸17	34953	1	Nut-Drive
❸18	590608	1	Washer

Attachments and Accessories

For 20076A - 22in Recycler Lawn Mower

Product Name	Model/Part
Traction Assist Handle Kit	108-8120
Tuneup Kit	20235
Replacement Bag	59303
Bagger Kit	59304
22 Inch Blade Kit	59534

TORO®