Form Number 3360-921 Rev A

Super Recycler® Lawn Mower

Model No. 20093C - 290000001 and up.

Parts Catalog

Ordering Replacement Parts
To order replacement parts, please supply the part number, the quantity, and the description of each part desired.

Understanding Reference Numbers
Each Identified part in an illustration has a reference number. The reference number for a part also appears in the parts list, along with other information about the part.

This catalog uses two special reference number formats, one to indicate parts in a service assembly and another to indicate the quantity of a given part in an illustration.

Service Assembly Reference Numbers
Parts in service assemblies have reference numbers in the form a:b. The a represents the reference number of the entire service assembly and the b represents a sequential number unique to each part within the service assembly.

For example, a wheel assembly might be identified by reference number 6, the tire by 6:1, the valve by 6:2, and the wheel by 6:3. When you order the assembly identified by reference number 6, you receive all parts identified by reference numbers 6:1, 6:2, and 6:3. However, you may also order any part individually. Reference numbers of this type appear in illustrations and in part lists.

Reference Numbers Indicating Quantity
In an illustration, if a reference number indicates more than one part, the reference number has the form nX y. The n represents the quantity of the part, the X is the multiplication symbol, and the y represents the reference number.

For example, in an illustration, the reference number 2X 37 means that two of the parts identified by reference number 37 are indicated.

Register your product at www.Toro.com

© The Toro Company - 2009
All Rights Reserved

Contents

Description	Page
Deck Housing and Rear Door Assembly	3
Discharge Door Assembly No. 107-3717	4
Housing Assembly No. 115-2855	5
Front Wheel Assembly	6
Rear Wheel and Transmission Assembly	7
Engine and Blade Assembly	8
Handle Assembly	9
Brake Bail and Cable Assembly	10
Rear Bag Assembly	11
Cylinder Assembly Briggs and Stratton 126T02-0237-B1	12
Crankshaft Assembly Briggs and Stratton 126T02-0237-B1	13
Crankcase Assembly Briggs and Stratton 126T02-0237-B1	14
Carburetor Assembly Briggs and Stratton 126T02-0237-B1	15
Air Cleaner Assembly Briggs and Stratton 126T02-0237-B1	16
Governor Assembly Briggs and Stratton 126T02-0237-B1	17
Muffler and Fuel Tank Assembly Briggs and Stratton 126T02-0237-B1	18
Blower Housing Assembly Briggs and Stratton 126T02-0237-B1	19
Starter Assembly Briggs and Stratton 126T02-0237-B1	20
Engine Gasket Set Briggs and Stratton 126T02-0237-B1	21
Carburetor Overhaul Kit Briggs and Stratton 126T02-0237-B1	22
Attachments and Accessories List	23

Part Description Abbreviations

Part descriptions in this catalog may include the following abbreviations.

AR	as required
ASM	assembly
BBC	blade brake clutch
CARR	carriage
DEG	degrees
EXT	external
FH	flat head
GA	gauge
HD	heavy-duty
HF	hex flange
HH	hex head
HHF	hex head flange
HHFTF	hex head flange thread forming
HJ	hex jam
HLH	hex lag head
HOC	height-of-cut
HSBH	hex socket button head
HSFH	hex socket flat head
HSH	hex socket head
HWH	hex washer head
HWHTF	hex washer head thread forming
HYD	hydraulic
LH	left hand
NI	nylon insert
NPTF	national pipe thread fine
PFH	phillips flat head
PPH	phillips pan head
PPHTF	phillips pan head thread forming
PRH	phillips round head
PTH	phillips truss head
PTO	power-take-off
RH	right hand
ROPS	roll-over protection system
SFH	slotted fillister head
SHH	slotted hex head
SHWH	slotted hex washer head
SPH	slotted pan head
SQH	square head
SRH	slotted round head
STD	standard
TAP	self tapping
TTH	torx truss head

Footnotes

❶ Not serviced separately

❷ Obtain from your local Briggs & Stratton dealer

❸ Included in Carburetor Overhaul Kit (Ref. No. 121)

❹ Included in Engine Gasket Set (Ref. No. 358)

❺ Included in Carburetor Gasket Set (Ref. No. 977)

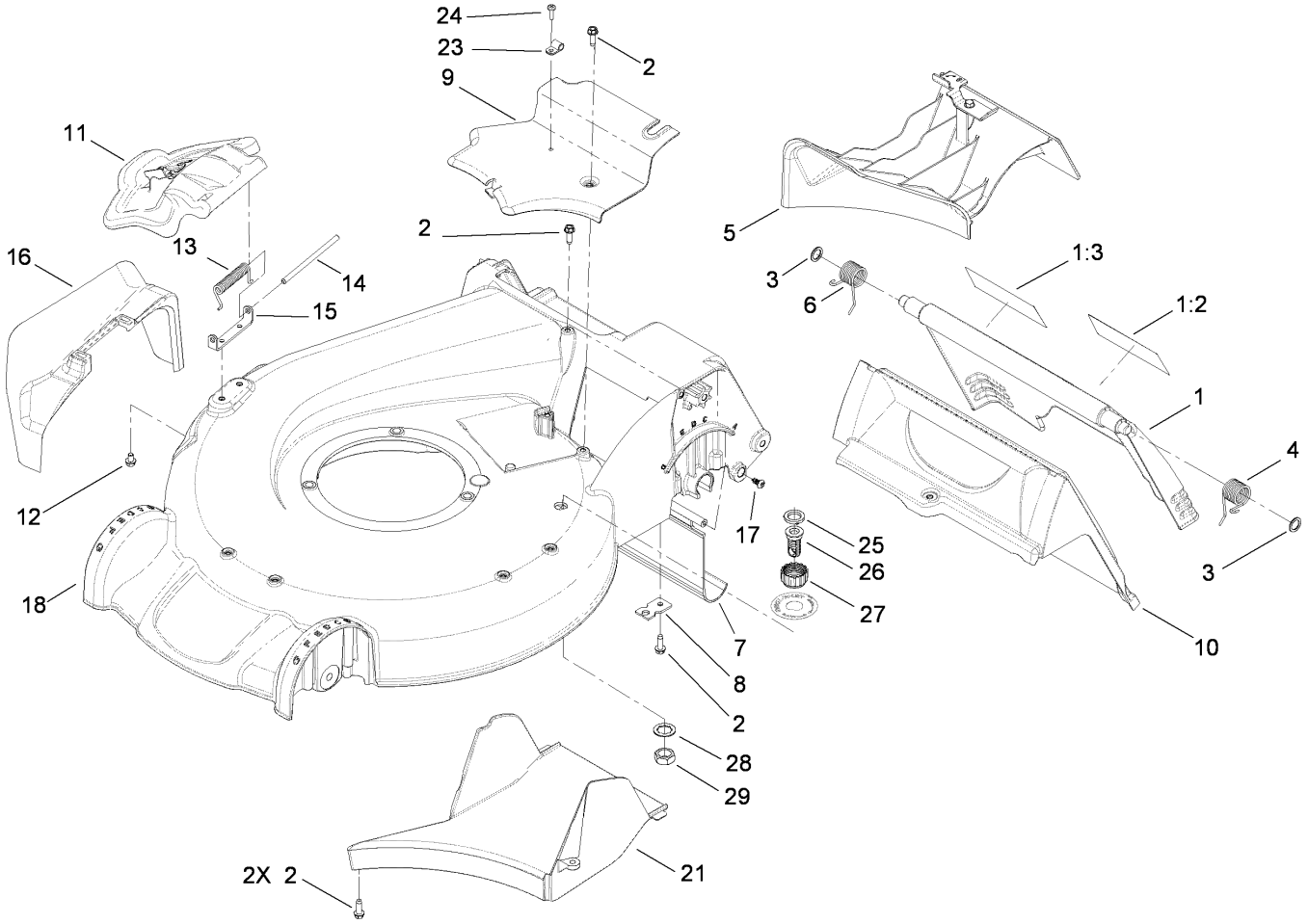

Deck Housing and Rear Door Assembly

Ref	Part No.	Qty.	Description
1	115-2856	1	Rear Door ASM
1:2	114-7982	1	Decal-Warning
1:3	104-7908	1	Decal-Warning
2	49-2040	6	Screw-HWHTF
3	94-8196	2	Washer-Nylon
4	115-2859	1	Spring-Torsion
5	115-8413	1	Mulch Plug ASM
6	114-7924	1	Spring-Torsion
7	114-1586	1	Shield-Trailing
8	107-7497	1	Bracket-Cable, Traction
9	107-7494	1	Cover-Belt
10	114-2668	1	Chute
11	107-3717	1	Discharge Door ASM
12	99-8445	2	Screw-HWH
13	99-5293	1	Spring-Torsion
14	99-5291	1	Rod-Cover
15	112-6416	1	Bracket-Cover
16	108-3753	1	Chute-Discharge, Side
17	117-1092	2	Screw-PPH
18	115-2855	1	Housing ASM
21	107-7495	1	Tunnel-Discharge
23	98-2256	1	Clamp
24	32144-32	1	Screw
25	112-6438	1	Washer-Seal, Washout Port

Ref	Part No.	Qty.	Description
26	112-6400	1	Port-Washout
27	112-6401	1	Coupling-Hose, Washout Port
28	3254-5	1	Washer-Tooth
29	3218-6	1	Nut-Jam

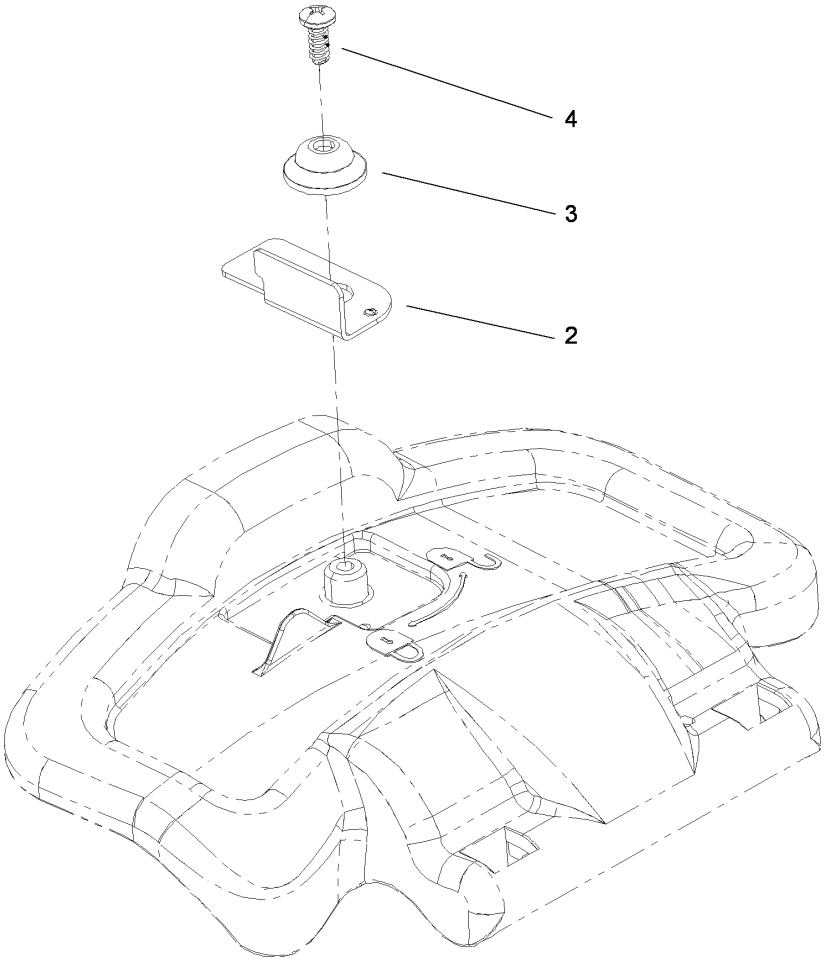

Discharge Door Assembly No. 107-3717

Ref	Part No.	Qty.	Description
2	107-0795	1	Latch-Door
3	107-7456	1	Cap-Door
4	107-7461	1	Screw-Plastite

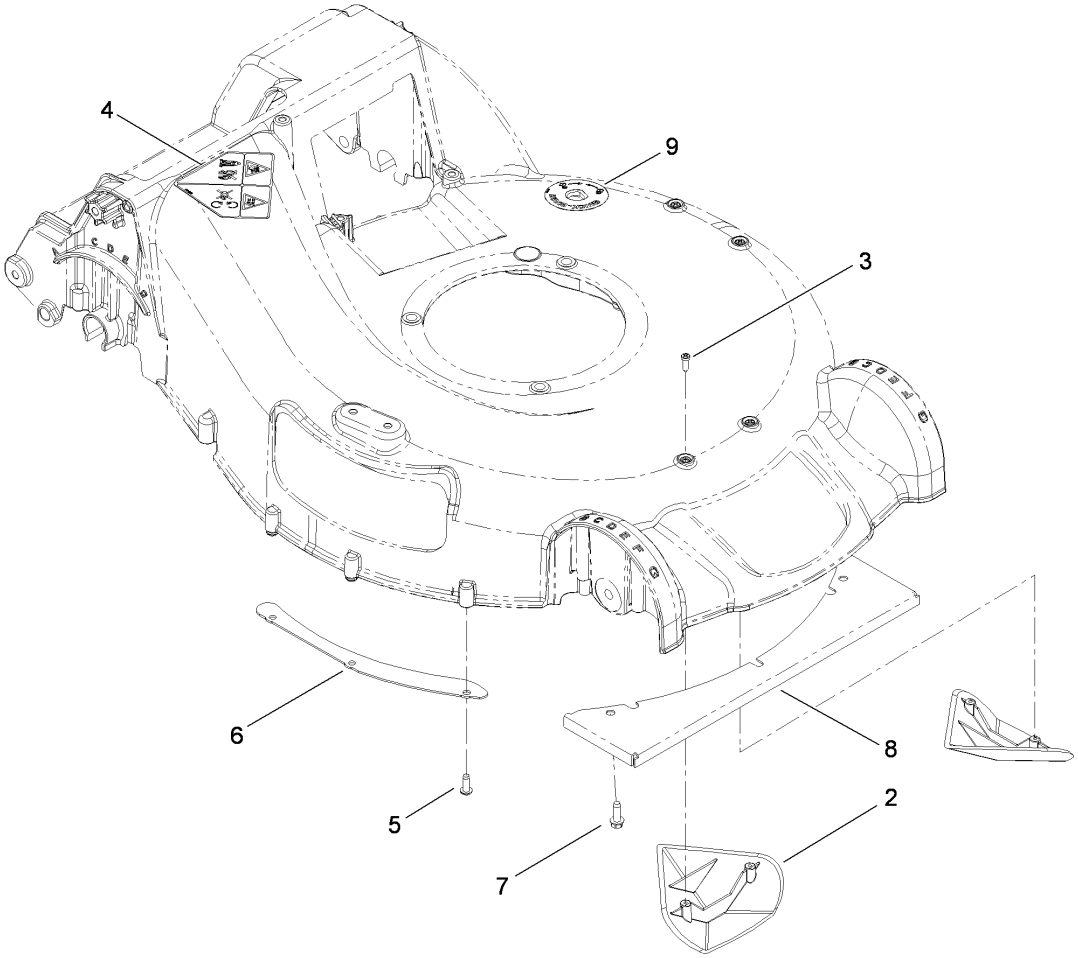

Housing Assembly No. 115-2855

Ref	Part No.	Qty.	Description
2	108-3798	2	Kicker-Housing
3	32144-111	4	Screw-PPH
4	112-8760	1	Decal-Danger
5	63-8590	3	Screw
6	105-1316-03	1	Sheet-Lip
7	49-2040	3	Screw-HWHTF
8	108-3797-03	1	Plate-Cover, Front
9	112-8867	1	Decal

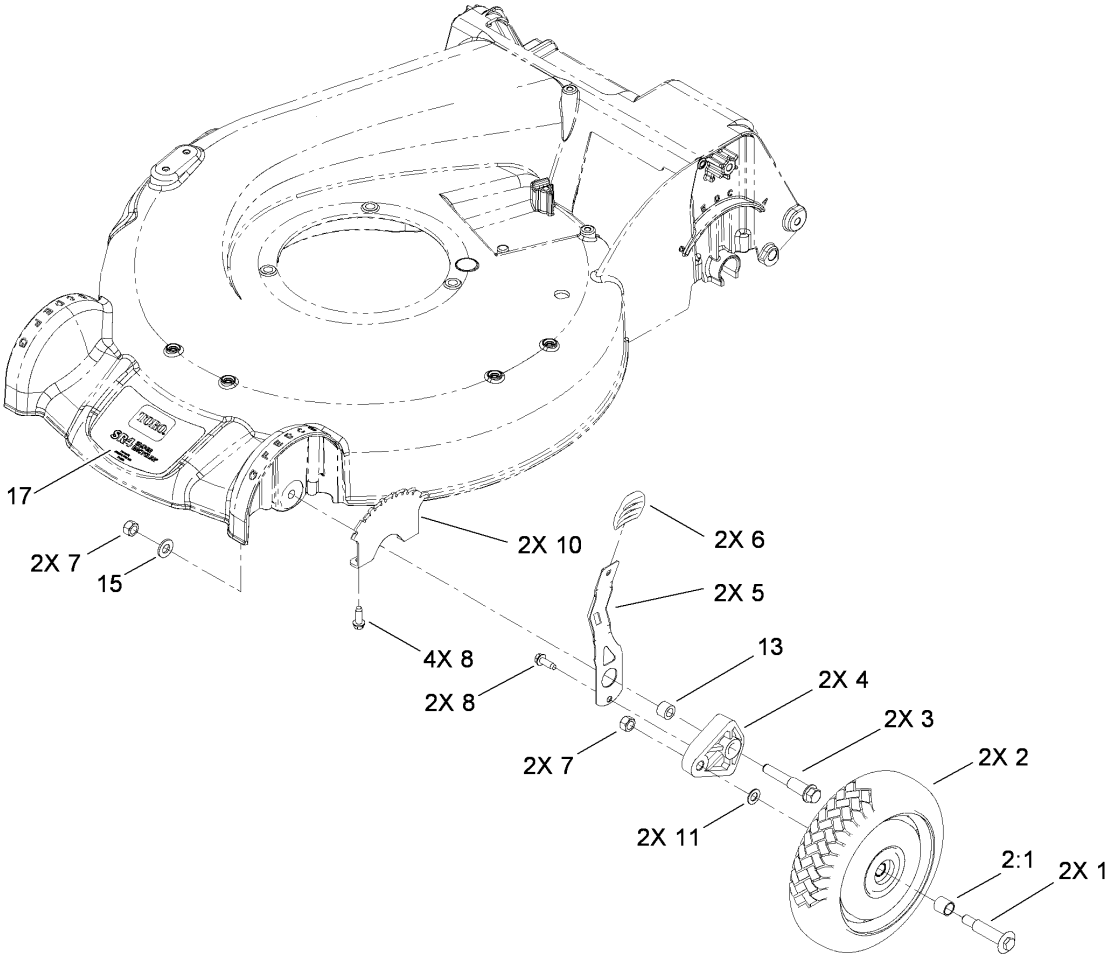

Front Wheel Assembly

Ref	Part No.	Qty.	Description
1	92-1057	2	Bolt-Shoulder
2	14-9989	2	Wheel And Tire ASM
2:1	27-6250	2	Bushing
3	114-3467	2	Screw-Shoulder
4	107-7492	2	Arm-Pivot
5	107-7491	2	Arm-Spring
6	105-3042	2	Knob-Lever, HOC
7	603773	4	Nut
8	49-2040	10	Screw-HWHTF
10	107-7478	4	Plate-HOC
11	40-1940	2	Washer
13	52-2480	2	Spacer-Wheel
15	3256-24	2	Washer-Flat
17	108-8168	1	Decal

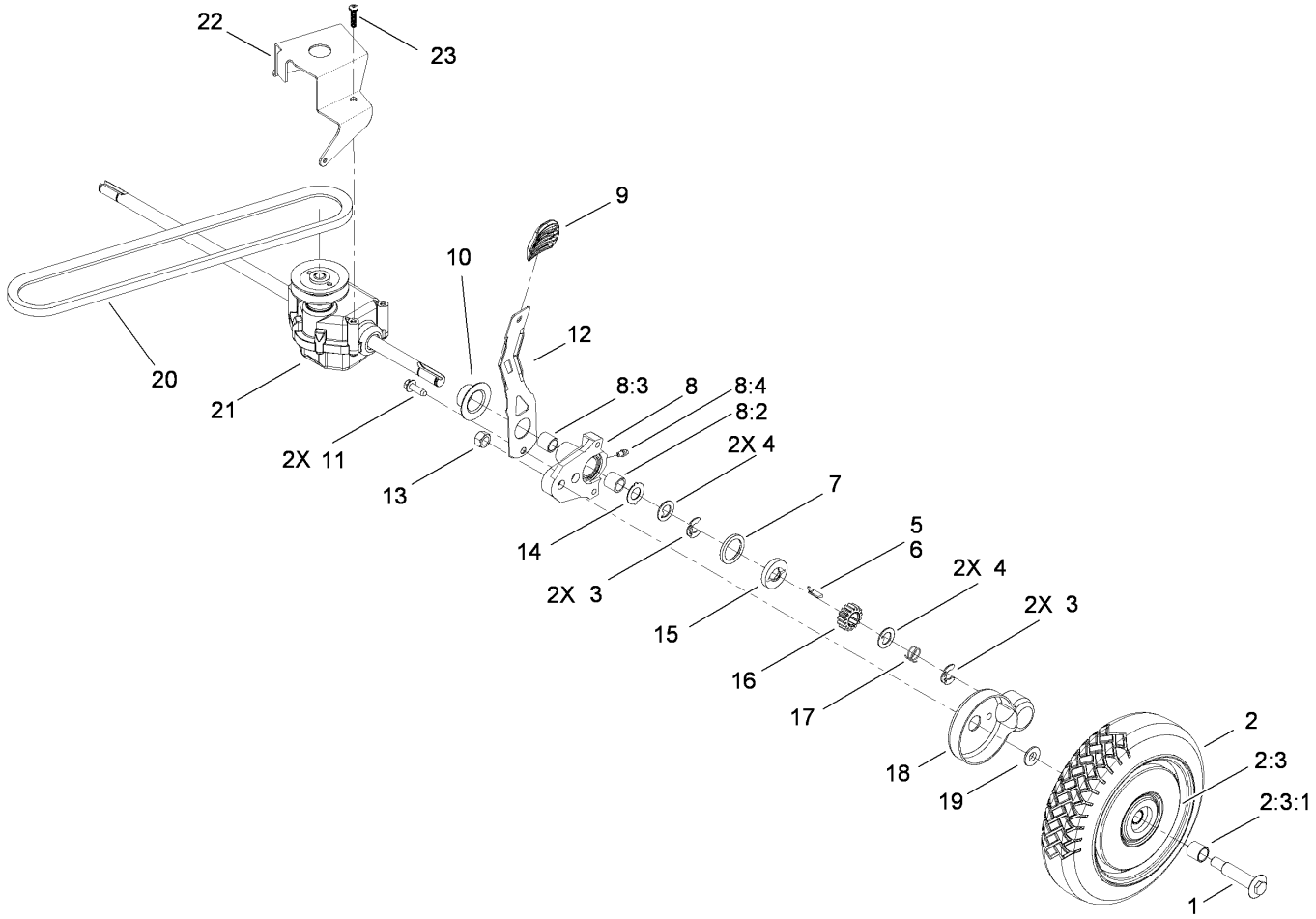

Rear Wheel and Transmission Assembly

Ref	Part No.	Qty.	Description
1	92-1057	2	Bolt-Shoulder
2	16-0029	2	Wheel And Tire ASM (W/Gear)
❶2:3		1	Wheel ASM
2:3:1	27-6250	2	Bushing
3	65-2720	4	Ring-Clip, Locking
4	65-4740	4	Washer-Thrust, Keyed
5	66-6040	1	Key-Rocking, RH
6	66-6050	1	Key-Rocking, LH
7	65-4710	2	Ring-Friction
8	100-8774	2	Pivot Arm ASM
8:2	47-2900	1	Bushing
8:3	70-9760	1	Bushing
8:4	302-56	1	Fitting-Grease
9	105-3042	2	Knob-Lever, HOC
10	42-3520	2	Cap-End
11	49-2040	2	Screw-HWHTF
12	107-7491	2	Arm-Spring
13	603773	2	Nut
14	65-4730	2	Washer-Arm, Pivot
15	65-4760	2	Washer-Clutch
16	65-4750	2	Gear-Pinion
17	65-4720	2	Spring-Compression
18	74-1660	2	Cover-Wheel
19	74-1671	2	Spacer-Cover, Wheel

Ref	Part No.	Qty.	Description
20	92-1043	1	V-Belt
21	115-4560	1	Transmission - Sr4, (6:1)
22	114-7977-03	1	Bracket-Transmission
23	108-7476	3	Screw-Plastite

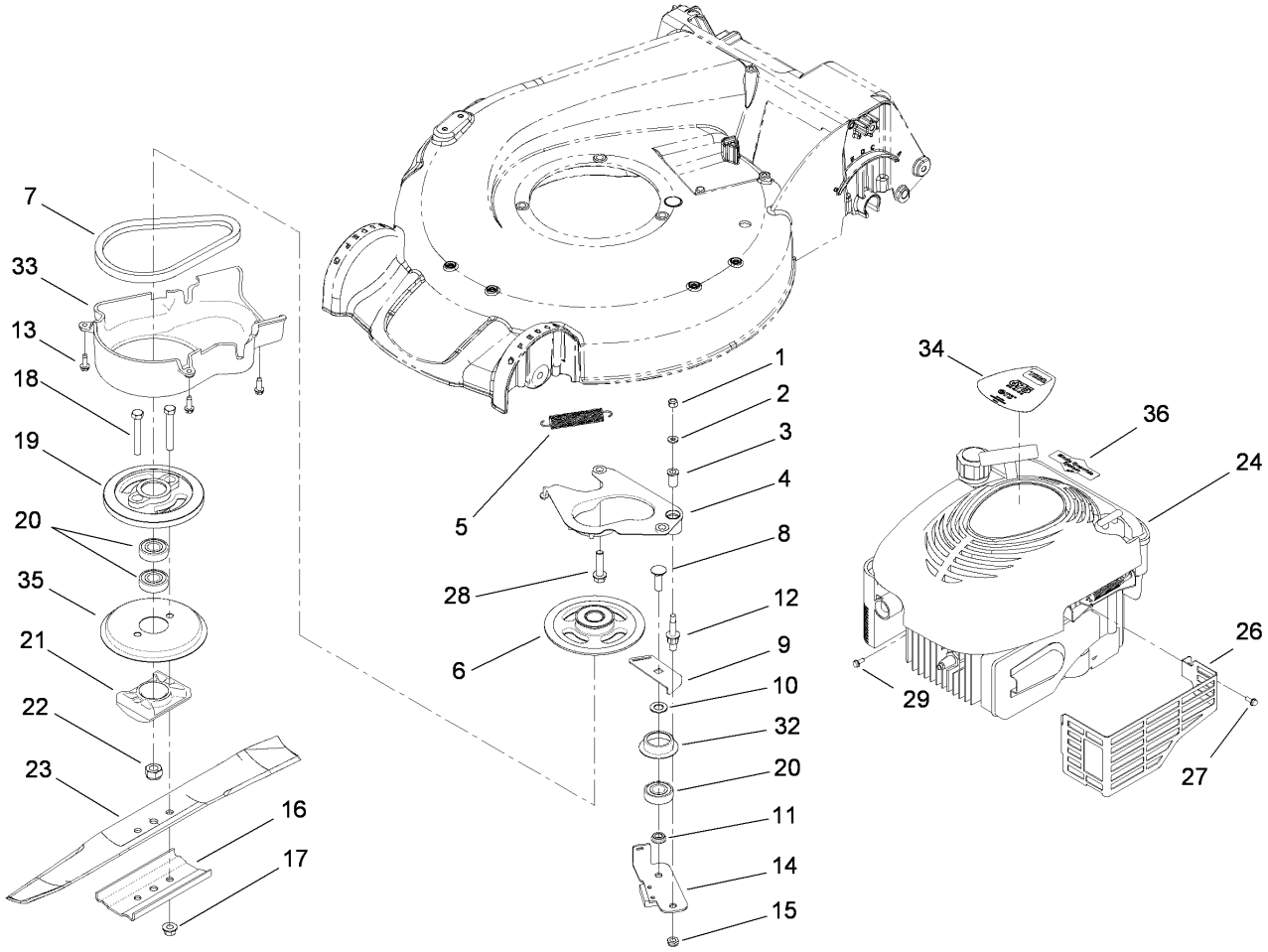

Engine and Blade Assembly

Ref	Part No.	Qty.	Description
1	3296-42	1	Nut-Lock, NI
2	3256-16	1	Washer-Flat
3	107-0797	1	Bushing
4	107-0761	1	Plate-Anchor
5	108-3792	1	Spring-Tension, Brake
6	110-7456	1	Pulley
7	110-1790	1	Belt-BBC
8	3231-25	1	Screw-CARR
9	107-7471	1	Plate-Guide
10	605256	1	Washer
11	107-0758	1	Spacer-Bearing
12	107-0759	1	Bolt-Shoulder
13	49-2040	3	Screw-HWHTF
14	107-7477	1	Brake Arm ASM
15	603773	2	Nut
16	108-3766-03	1	Support-Blade
17	54-9190	2	Nut-Lock
18	3211-42	2	Screw-HH
19	107-0754	1	Drum
20	100-1048	3	Bearing-Ball
21	107-7487	1	Support-Blade
22	108-9342	1	Nut-Hex
23	108-3762-03	1	Blade-Recycling
❶❷24		1	Engine-B&s, 126T02-0190-B1

Ref	Part No.	Qty.	Description
26	104-7577-03	1	Shield-Muffler
27	32144-1	3	Screw-Taptite
28	32144-102	3	Screw-HWH
29	32144-112	1	Screw-HWH
32	108-3790	1	Retainer-Belt
33	107-7488	1	Cover
34	114-0339	1	Decal-Engine
35	108-3787	1	Disc
36	108-8131	1	Decal-Recoil

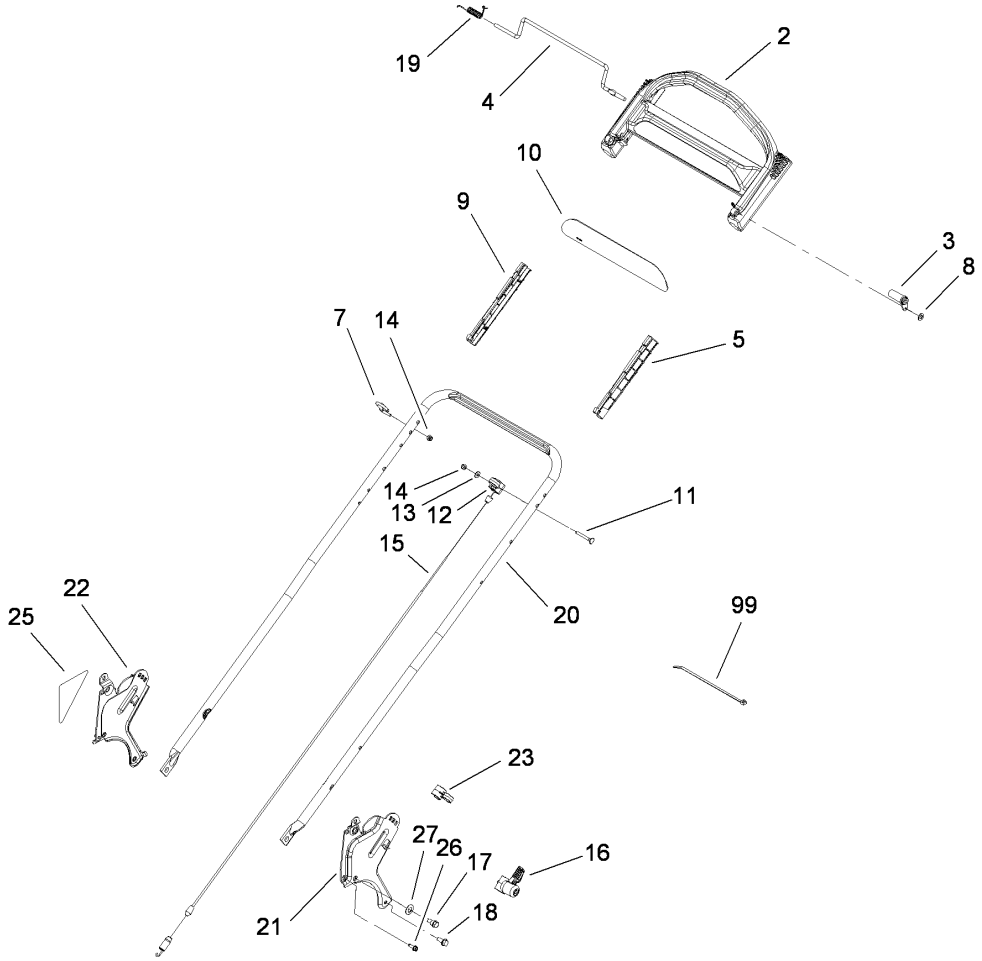

Handle Assembly

Ref	Part No.	Qty.	Description
2	104-8678	1	Handle-Control
3	99-1589	1	Lever-Traction
4	99-1588	1	Bar-Control, Traction
5	105-6842	1	Guide-LH
7	86-9671	1	Guide-Rope
8	3256-23	1	Washer-Flat
9	105-6841	1	Guide-RH
10	108-8134	1	Decal-Handle
11	321-50	1	Screw-HH
12	99-5239	1	Anchor-Cable
13	3256-1	1	Washer-Flat
14	3296-73	2	Nut-Lock, NI
15	108-8158	1	Cable-Traction
16	115-2860	2	Quick Release ASM
17	115-1958	2	Bolt-Shoulder
18	32144-11	2	Screw-HWHTF
19	104-8690	1	Spring-Torsion
20	115-1300-05	1	Handle
21	114-2671-03	1	Bracket-Handle, LH
22	114-2672-03	1	Bracket-Handle, RH
23	106-6805	1	Guide-Cable
25	115-2884	1	Decal-Instruction
26	49-2040	2	Screw-HWHTF
27	112-9972	2	Washer-Conical, Spring

Ref	Part No.	Qty.	Description
99	614249	3	Strap-Tie

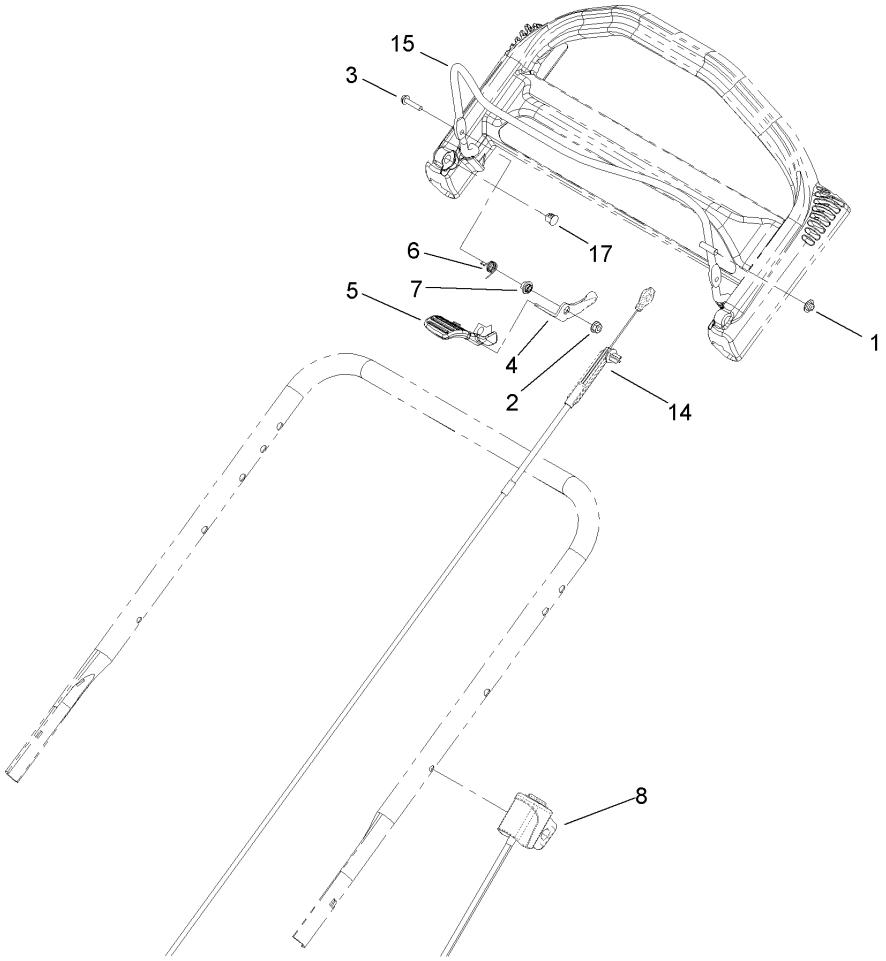

Brake Bail and Cable Assembly

Ref	Part No.	Qty.	Description
1	3290-337	1	Nut-Speed
2	32128-17	1	Nut-Lock, Flange
3	106-9169	1	Screw
4	106-6802	1	Lever
5	112-8884	1	Knob-BBC
6	107-7462	1	Spring-Torsion
7	107-7463	1	Spacer
8	108-8161	1	Switch Housing ASM
14	108-8155	1	Cable ASM
15	108-3788-03	1	Bail-Brake
17	104-9368	1	Plug-Dome

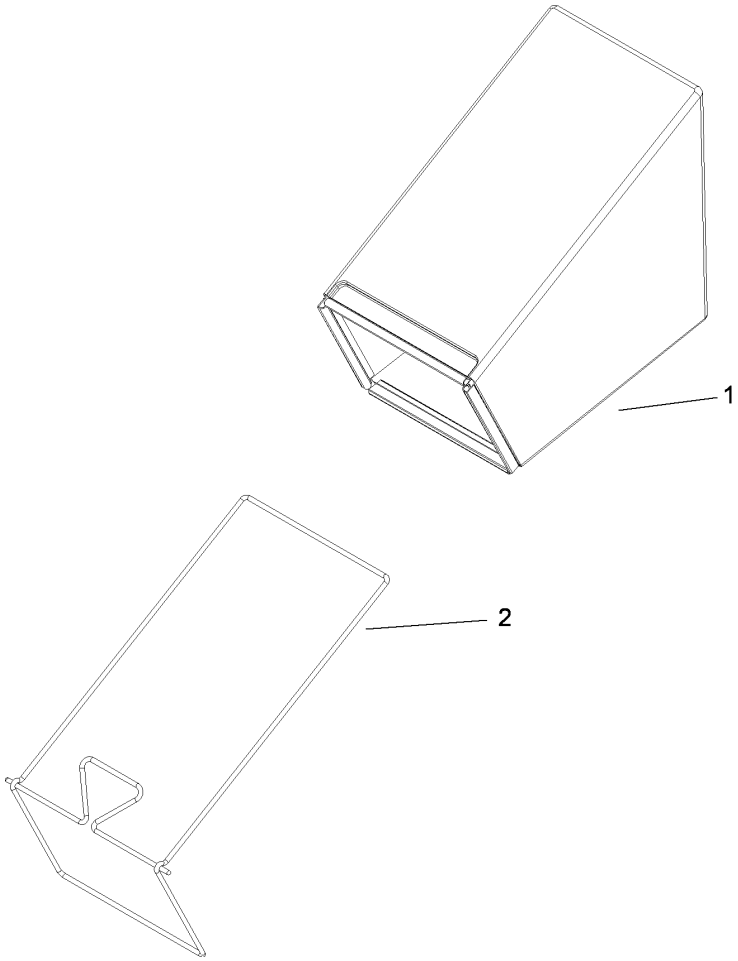

Rear Bag Assembly

Ref	Part No.	Qty.	Description
1	114-2664	1	Grass Bag ASM
2	114-2679-03	1	Bag Frame ASM

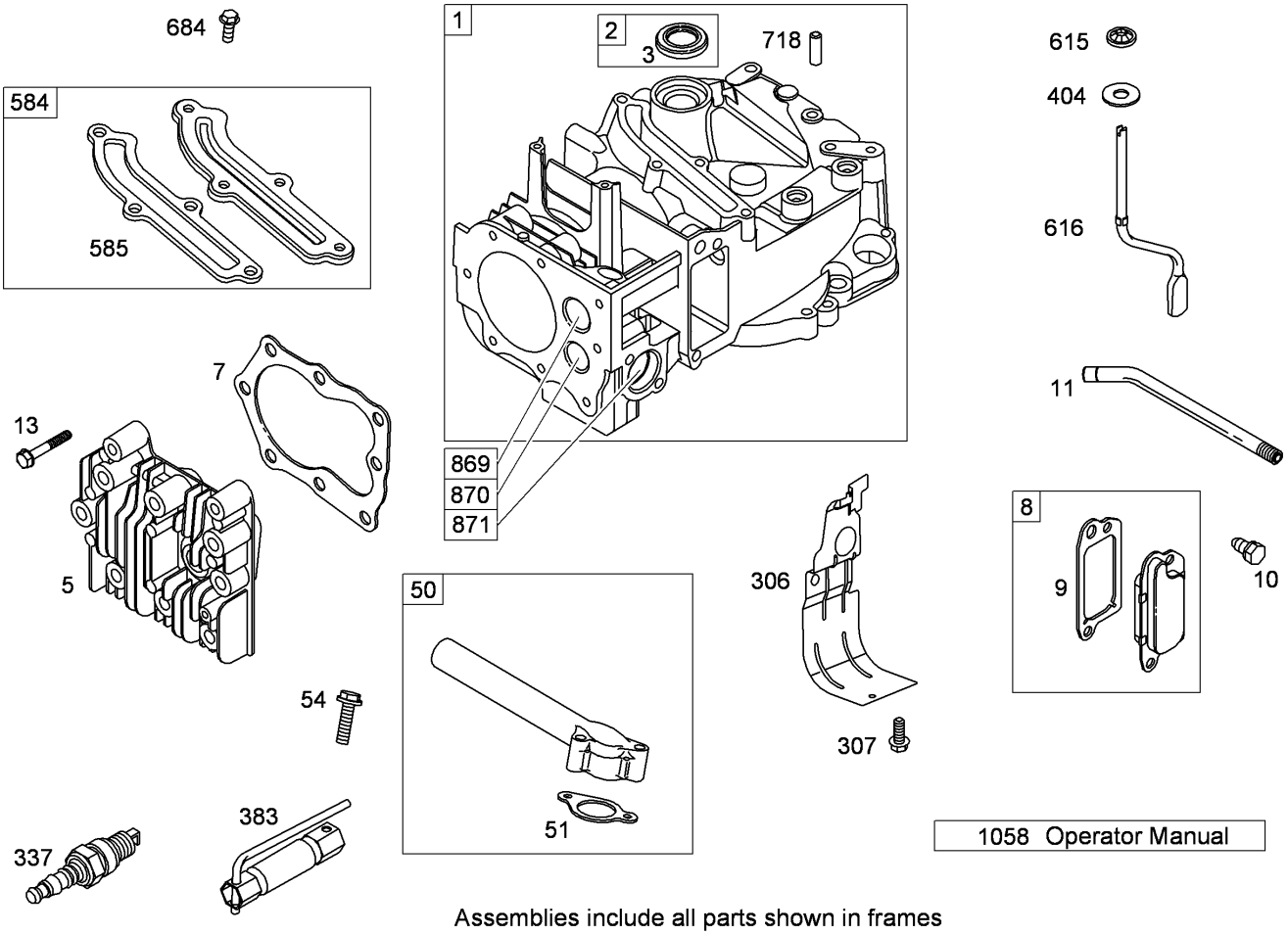

Assemblies include all parts shown in frames

Cylinder Assembly
Briggs and Stratton 126T02-0237-B1

Ref	Part No.	Qty.	Description
❷1	697322	1	Cylinder ASM
❷2	399269	1	Bushing And Seal Kit
❷❹3	299819s	1	Seal-Oil (Magneto Side)
❷5	691160	1	Head-Cylinder
❷❹7	692249	1	Gasket-Head, Cylinder
❷8	695250	1	Breather ASM
❷9	696125	1	Gasket-Breather
❷10	691125	1	Screw (Breather ASM)
❷11	691781	1	Tube-Breather
❷13	690912	1	Screw (Cylinder Head)
❷50	794305	1	Manifold-Intake
❷❹51	794306	1	Gasket-Intake
❷54	691650	1	Screw (Intake Manifold)
❷306	790836	1	Shield-Cylinder
❷307	690345	1	Screw (Cylinder Shield)
❷337	802592s	1	Plug-Spark
❷383	89838s	1	Wrench-Spark Plug
❷404	690272	1	Washer (Governor Crank)
❷584	697734	1	Cover-Passage, Breather
❷❹585	691879	1	Gasket-Passage, Breather
❷615	690340	1	Retainer-Shaft, Governor
❷616	698801	1	Crank-Governor
❷684	690345	1	Screw (Breather Passage Cover)
❷718	690959	1	Pin-Locating

Ref	Part No.	Qty.	Description
❷869	691155	1	Seat-Valve (Intake)
❷870	690380	1	Seat-Valve (Exhaust)
❷871	262001	1	Bushing-Guide (Exhaust)
❷871	63709	1	Bushing-Guide (Intake)
❷1058	277039TRI	1	Operator Manual

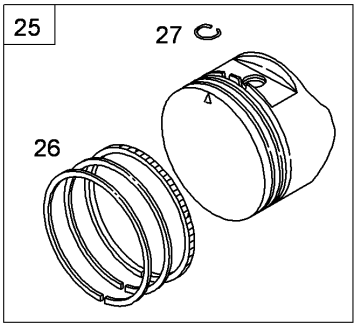

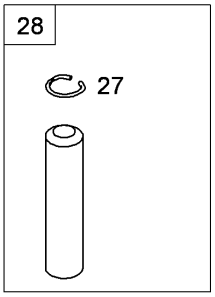

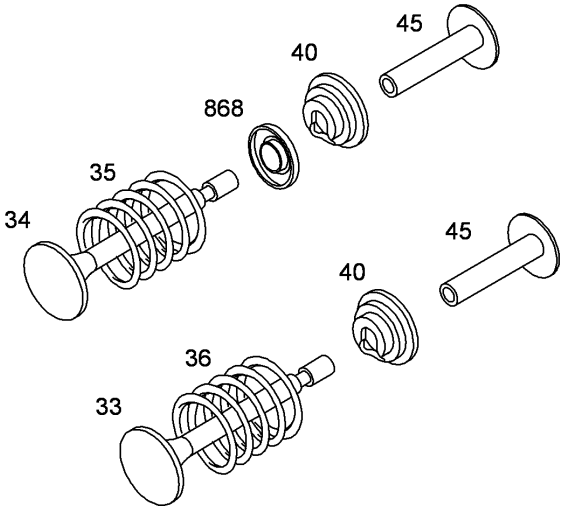

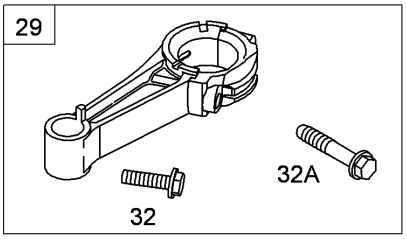

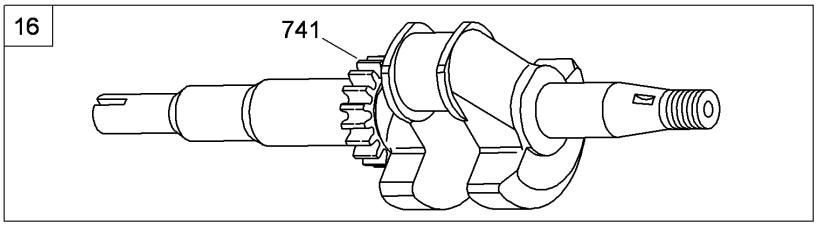

Assemblies include all parts shown in frames

Crankshaft Assembly
Briggs and Stratton 126T02-0237-B1

Ref	Part No.	Qty.	Description
❷16	791061	1	Crankshaft
❷24	222698s	1	Key-Flywheel
❷25	795429	1	Piston ASM (Standard)
❷25	795430	1	Piston ASM (.020 Oversize)
❷26	795431	1	Ring Set (Standard)
❷26	795432	1	Ring Set (.020 Oversize)
❷27	691866	1	Lock-Pin, Piston
❷28	499423	1	Pin-Piston
❷29	499424	1	Rod-Connecting
❷32	691664	1	Screw (Connecting Rod)
❷32A	695759	1	Screw (Connecting Rod)
❷33	262651s	1	Valve-Exhaust
❷34	262652s	1	Valve-Intake
❷35	691270	1	Spring-Valve (Intake)
❷36	691270	1	Spring-Valve (Exhaust)
❷40	692194	1	Retainer-Valve
❷45	690548	1	Tappet-Valve
❷741	795755	1	Gear-Timing
❷868	697338	1	Seal-Valve

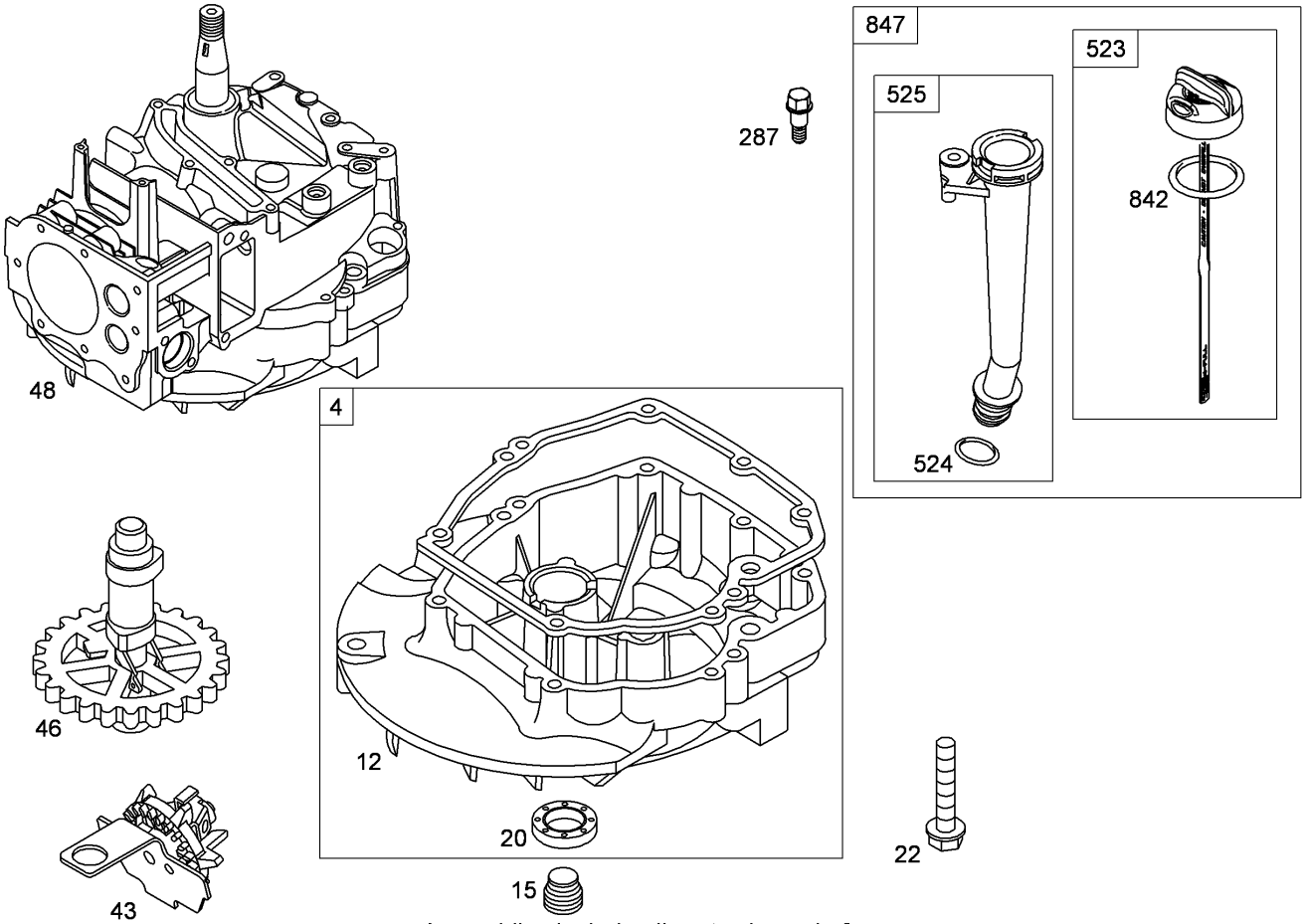

Assemblies include all parts shown in frames

Crankcase Assembly
Briggs and Stratton 126T02-0237-B1

Ref	Part No.	Qty.	Description
❷4	493279	1	Sump-Engine
❷❹12	692232	1	Gasket–Crankcase (.015 STD)
❷15	691680	1	Plug-Drain, Oil
❷❹20	399781s	1	Seal-Oil
❷22	691092	1	Screw (Engine Sump)
❷43	691997	1	Slinger-Oil, Governor
❷46	691449	1	Camshaft
❷48	791772	1	Block-Short
❷287	690940	1	Screw (Dipstick Tube)
❷523	499621	1	Dipstick
❷❹524	692296	1	O-Ring Seal (Dipstick Tube)
❷525	495265	1	Tube-Dipstick
❷❹842	691031	1	Seal-O Ring (Dipstick Tube)
❷847	692047	1	Dipstick Tube ASM

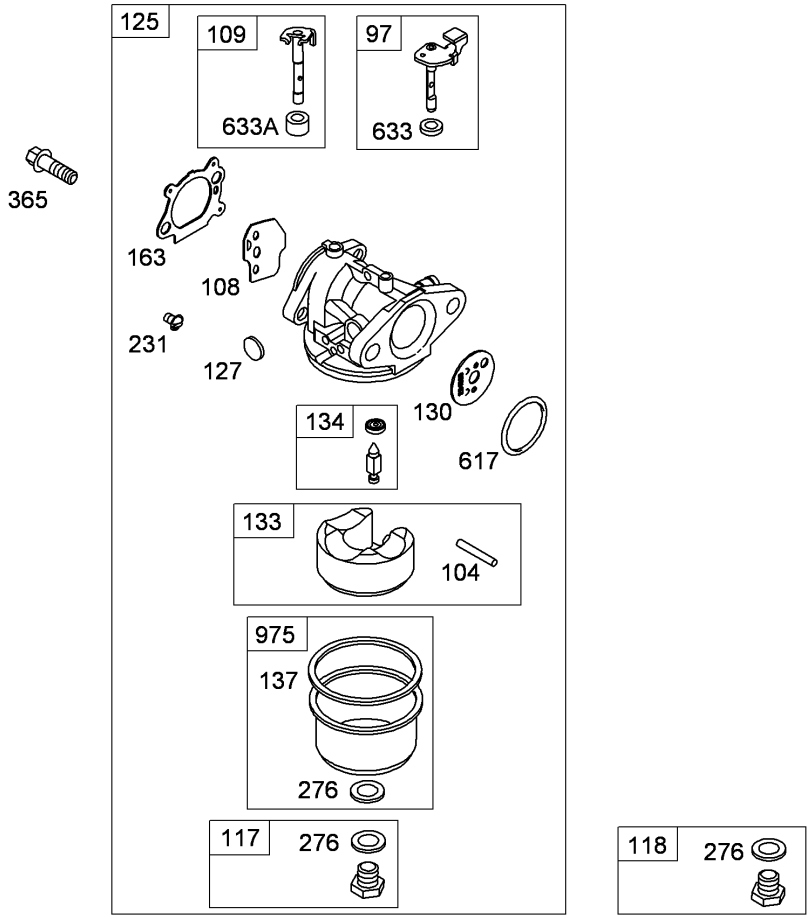

Assemblies include all parts shown in frames

Carburetor Assembly
Briggs and Stratton 126T02-0237-B1

Ref	Part No.	Qty.	Description
❷97	696565	1	Shaft-Throttle
❷❸104	691242	1	Pin-Hinge, Float
❷108	790844	1	Valve-Choke
❷109	790843	1	Shaft-Choke
❷117	691428	1	Jet-Main (Standard)
❷118	498977	1	Jet-Main (High Altitude)
❷125	794304	1	Carburetor
❷❸127	694468	1	Plug-Welch
❷130	696564	1	Valve-Throttle
❷133	398187	1	Float-Carburetor
❷❸134	398188	1	Needle And Seat Kit
❷137	693981	1	Gasket-Bowl, Float
❷❸163 ❹❺	272653s	1	Gasket-Cleaner, Air
❷231	691636	1	Screw (Choke Valve)
❷❸276 ❺	271716	1	Washer-Sealing
❷365	692524	1	Screw (Carburetor)
❷❸617 ❺	270344s	1	Seal-O Ring (Intake Manifold)
❷❸633 ❺	691321	1	Seal-Shaft, Choke Throttle
❷❸633A ❺	693867	1	Seal-Shaft, Choke Throttle
❷975	493640	1	Bowl-Float

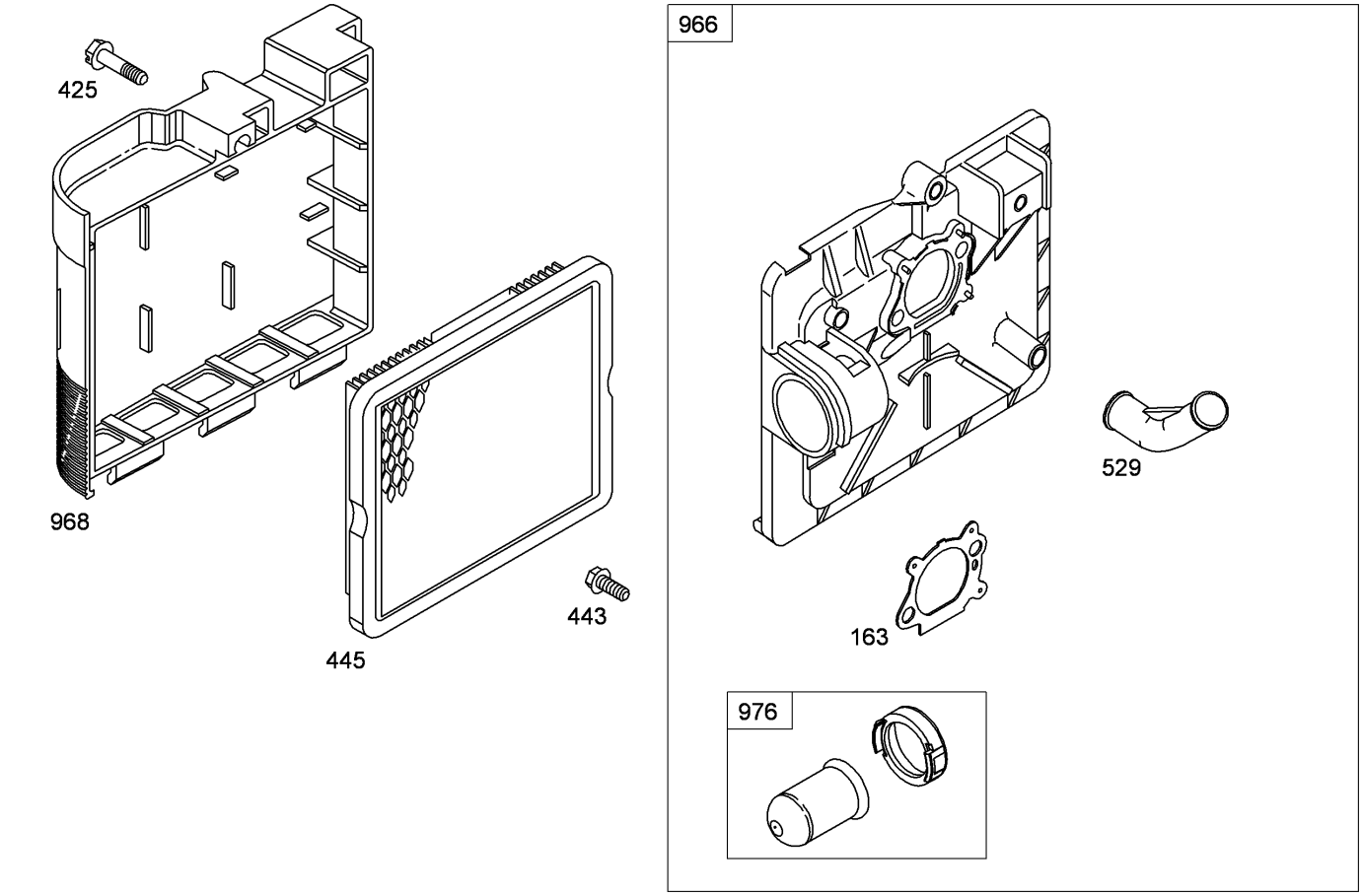

Assemblies include all parts shown in frames

Air Cleaner Assembly
Briggs and Stratton 126T02-0237-B1

Ref	Part No.	Qty.	Description
❷❸163 ❹❺	272653s	1	Gasket-Cleaner, Air
❷425	690670	1	Screw (Air Cleaner Cover)
❷443	692523	1	Screw (Air Cleaner Primer Base)
❷445	491588s	1	Filter-Cartridge, Air Cleaner
❷529	691923	1	Grommet
❷966	792040	1	Base-Primer, Air Cleaner
❷968	692298	1	Cover-Cleaner, Air
❷976	694395	1	Primer-Carburetor

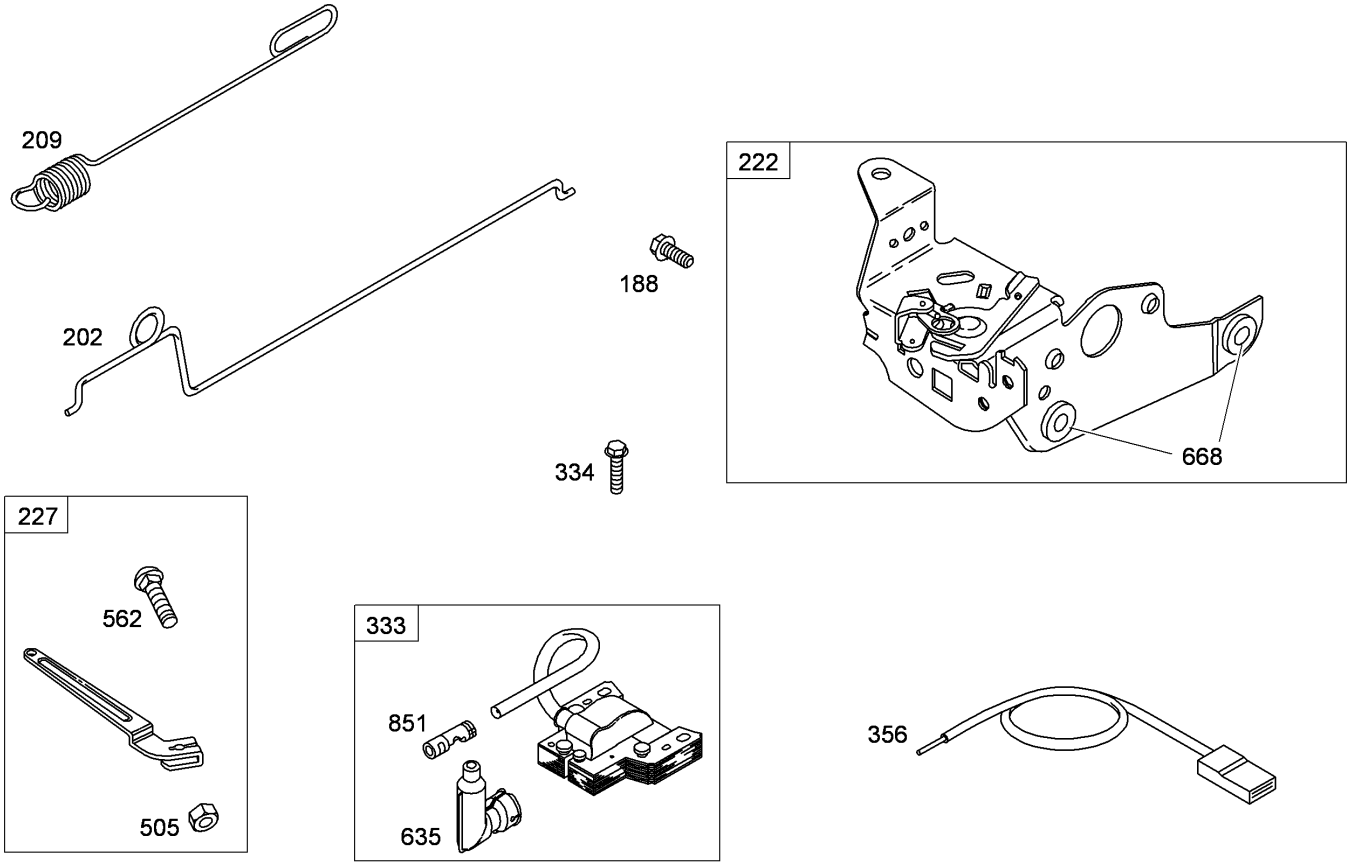

Assemblies include all parts shown in frames

Governor Assembly
Briggs and Stratton 126T02-0237-B1

Ref	Part No.	Qty.	Description
❷188	693399	1	Screw (Control Bracket)
❷202	691829	1	Link-Governor, Mechanical
❷209	691292	1	Spring-Governor
❷222	793754	1	Bracket-Control
❷227	690783	1	Lever-Control, Governor
❷333	793353	1	Armature-Magneto
❷334	691061	1	Screw (Magneto Armature)
❷356	690791	1	Wire-Stop
❷505	691251	1	Nut (Governor Control Lever)
❷562	691119	1	Bolt (Governor Control Lever)
❷635	793351	1	Boot-Spark Plug
❷❹668	493823	1	Spacer
❷851	692424	1	Terminal–Spark Plug

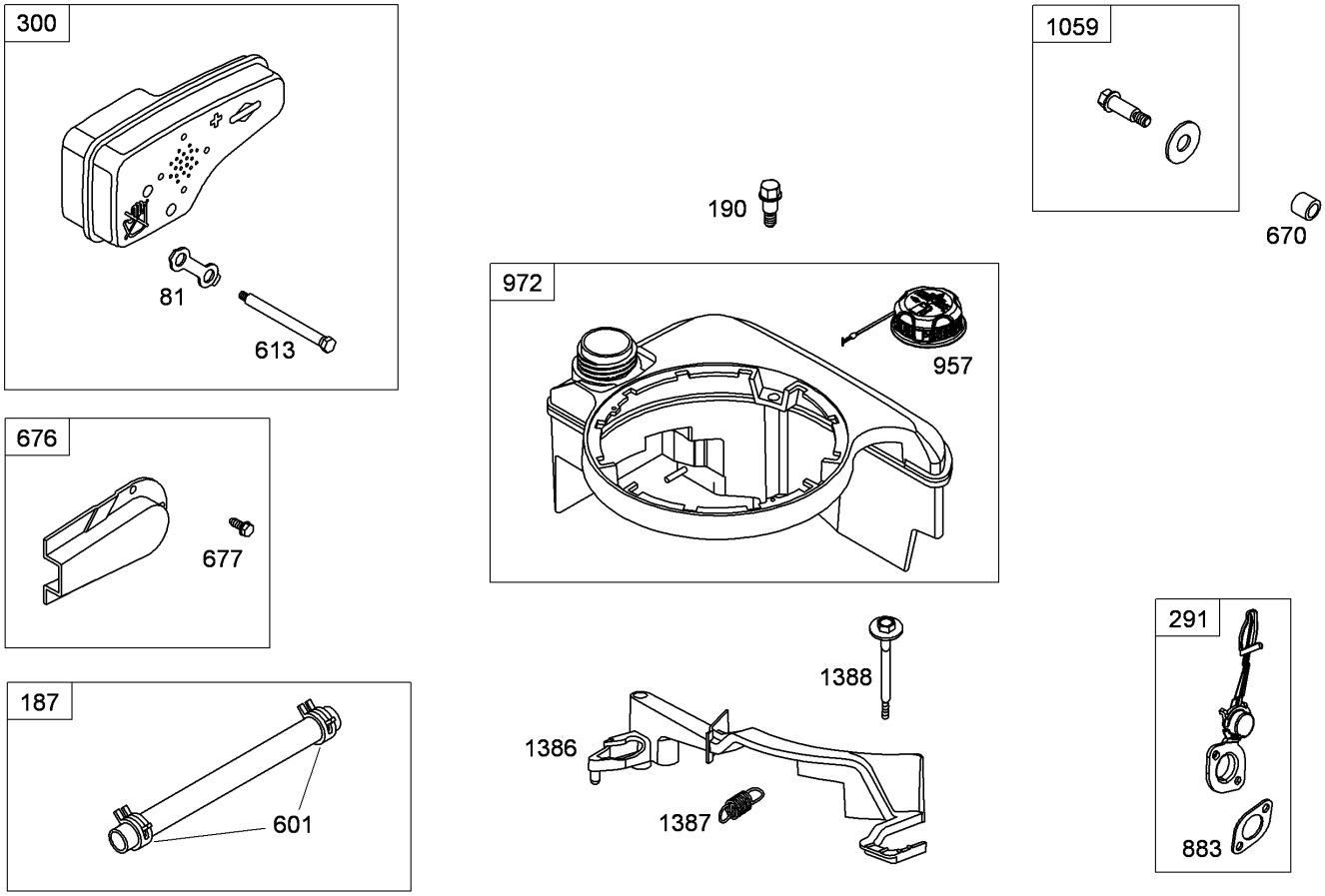

Assemblies include all parts shown in frames

Muffler and Fuel Tank Assembly
Briggs and Stratton 126T02-0237-B1

Ref	Part No.	Qty.	Description
❷81	691740	1	Lock-Screw, Muffler
❷187	791766	1	Line-Fuel (Cut To Required Length)
❷190	690940	1	Screw (Fuel Tank)
❷291	790830	1	Thermostat
❷300	692038	1	Muffler
❷601	791850	1	Clamp-Hose
❷613	691340	1	Screw (Muffler)
❷670	692294	1	Spacer-Tank, Fuel
❷676	493871	1	Deflector-Muffler
❷677	690661	1	Screw (Muffler Deflector)
❷883	691881	1	Gasket-Exhaust
❷957	699985	1	Cap-Tank, Fuel
❷972	699374	1	Tank-Fuel
❷1059	692311	1	Screw And Washer Kit
❷1386	790848	1	Vane-Air
❷1387	790849	1	Spring-Vane, Air
❷1388	790850	1	Screw (Air Vane)

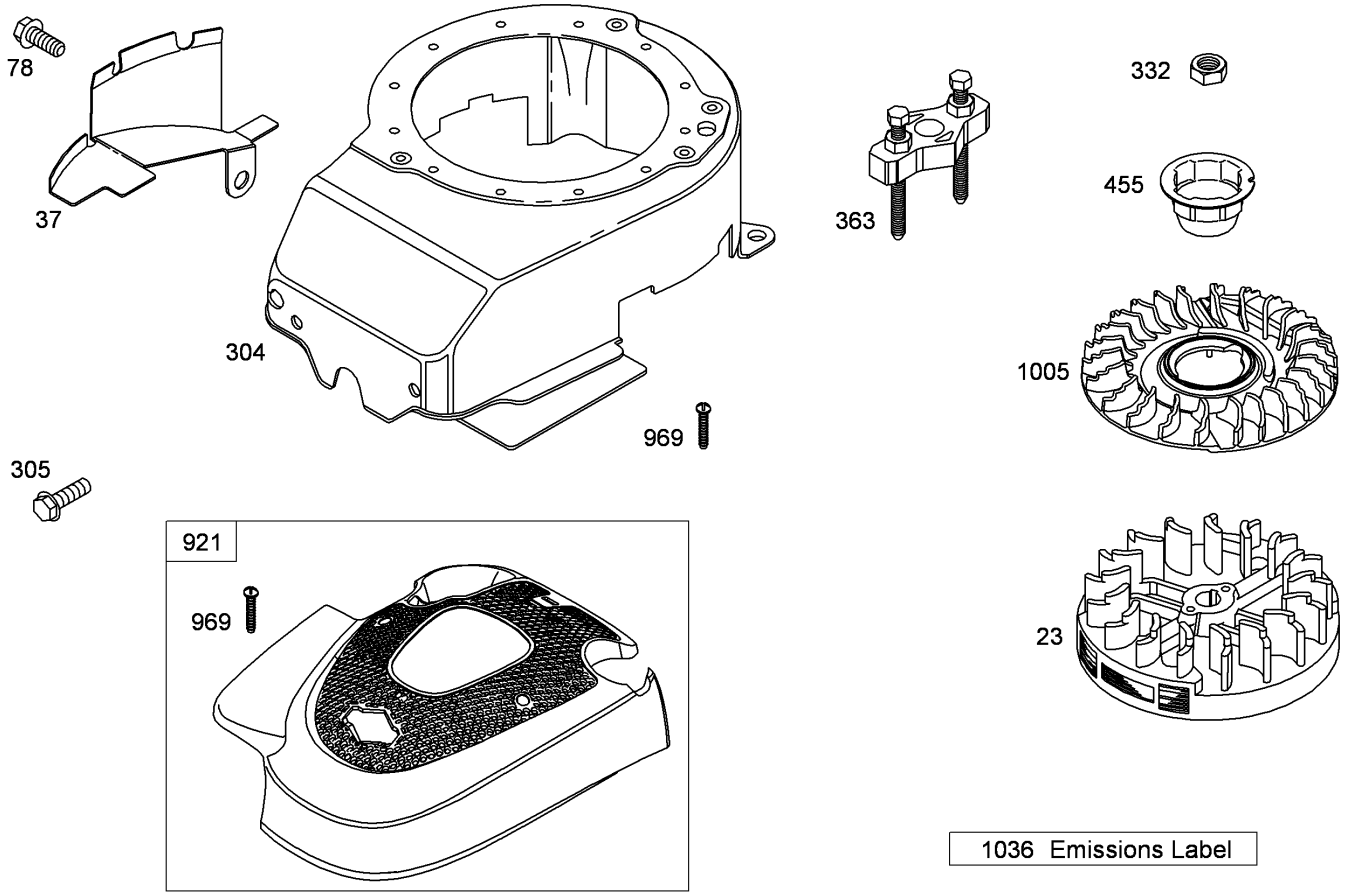

Assemblies include all parts shown in frames

Blower Housing Assembly
Briggs and Stratton 126T02-0237-B1

Ref	Part No.	Qty.	Description
❷23	691992	1	Flywheel
❷37	694086	1	Guard-Flywheel
❷78	691108	1	Screw (Flywheel Guard)
❷304	791288	1	Housing-Blower
❷305	691108	1	Screw (Blower Housing)
❷332	690662	1	Nut (Flywheel)
❷363	19069	1	Puller-Flywheel
❷455	791760	1	Cup-Flywheel
❷921	790036	1	Cover-Housing, Blower
❷969	691138	1	Screw (Blower Housing Cover)
❷1005	691346	1	Fan–Flywheel
❷1036		1	Label-Emissions

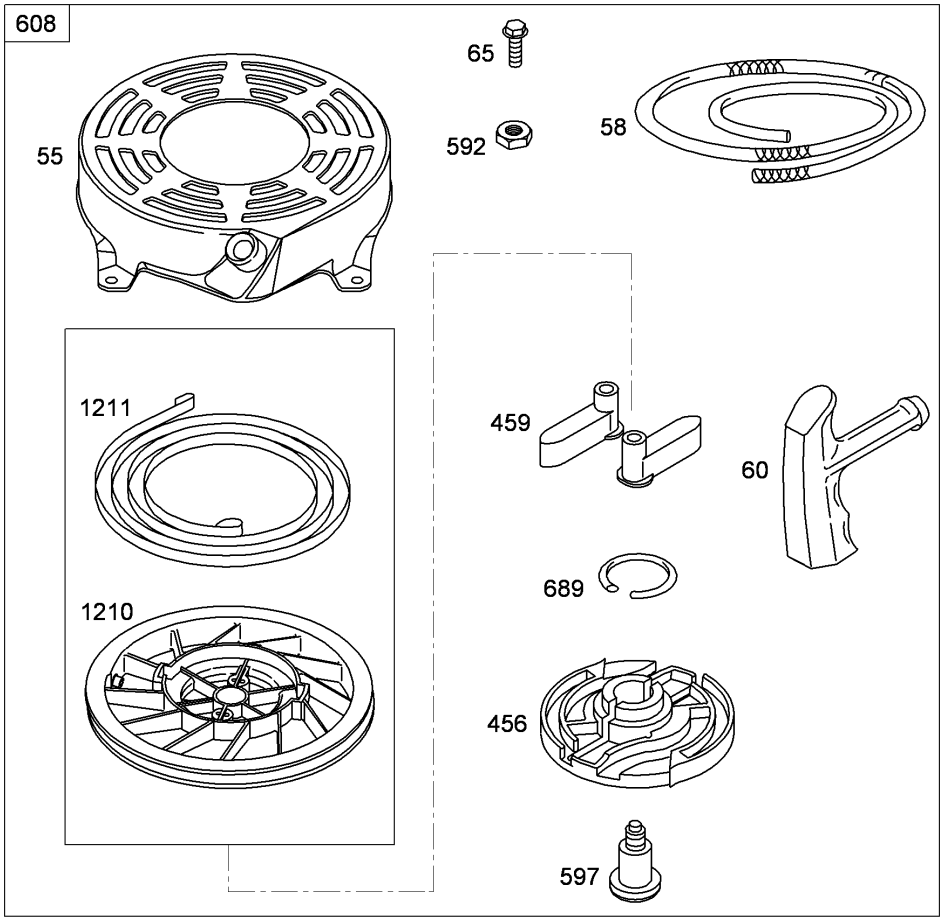

Assemblies include all parts shown in frames

Starter Assembly
Briggs and Stratton 126T02-0237-B1

Ref	Part No.	Qty.	Description
❷55	691421	1	Housing-Starter, Rewind
❷58	697316	1	Rope-Starter (Cut To Required Length)
❷60	281434s	1	Grip-Rope, Starter
❷65	690837	1	Screw (Rewind Starter)
❷456	692299	1	Plate-Friction, Pawl
❷459	281505s	1	Ratchet-Pawl
❷592	690800	1	Nut (Rewind Starter)
❷597	691696	1	Screw (Pawl Friction Plate)
❷608	497680	1	Starter-Rewind
❷689	691855	1	Spring-Friction
❷1210	498144	1	Pulley And Spring ASM (Pulley)
❷1211	498144	1	Pulley And Spring ASM (Spring)

358 Engine Gasket Set

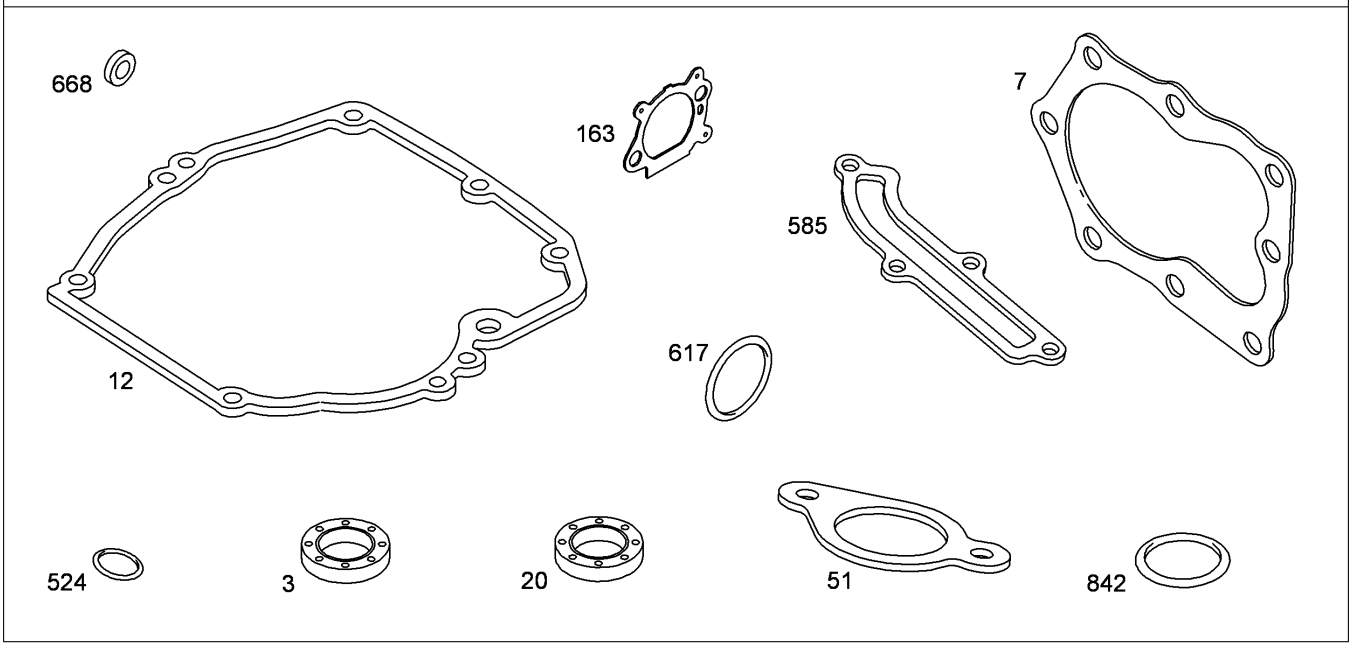

Assemblies include all parts shown in frames

Engine Gasket Set
Briggs and Stratton 126T02-0237-B1

Ref	Part No.	Qty.	Description
❷❹3	299819s	1	Seal-Oil (Magneto Side)
❷❹7	692249	1	Gasket-Head, Cylinder
❷❹12	692232	1	Gasket-Crankcase (.015 STD)
❷❹20	399781s	1	Seal-Oil (PTO Side)
❷❹51	794306	1	Gasket-Intake
❷❺163 ❹❺	272653s	1	Gasket-Cleaner, Air
❷358	794307	1	Engine Gasket Set
❷❹524	692296	1	Seal-O Ring (Dipstick Tube)
❷❹585	691879	1	Gasket-Passage, Breather
❷❺617 ❹❺	270344s	1	Seal-O Ring (Intake Manifold)
❷❹668	493823	1	Spacer
❷❹842	691031	1	Seal-O Ring (Dipstick)

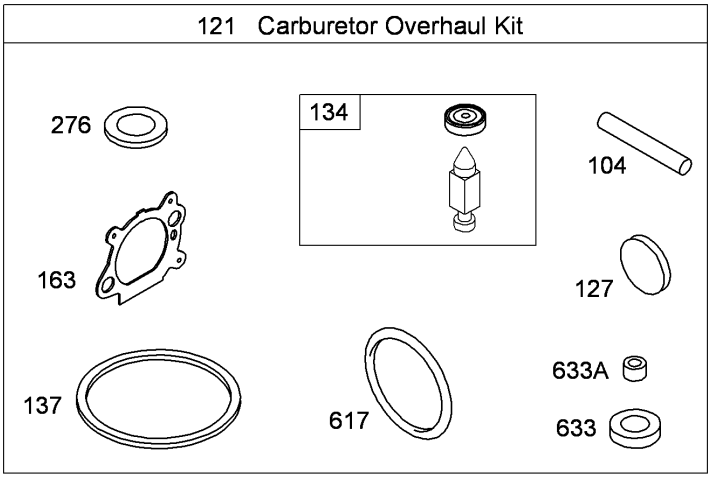

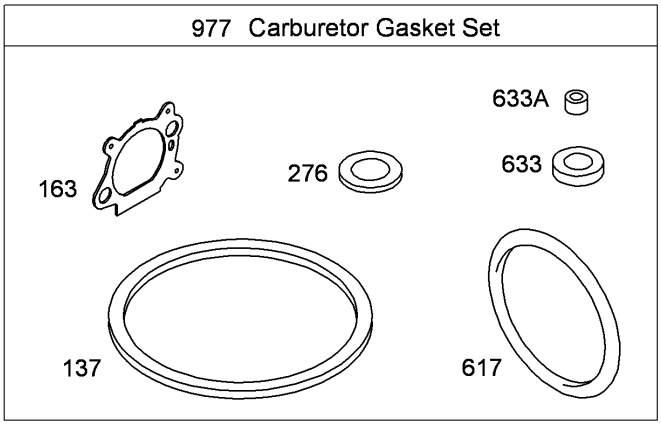

Assemblies include all parts shown in frames

Carburetor Overhaul Kit
Briggs and Stratton 126T02-0237-B1

Ref	Part No.	Qty.	Description
❷❸104	691242	1	Pin-Hinge, Float
❷121	498260	1	Carburetor Overhaul Kit
❷❸127	694468	1	Plug-Welch
❷❸134	398188	1	Needle And Seat Kit
❷❸137 ❺	693981	1	Gasket-Bowl, Float
❷❸163 ❹❺	272653s	1	Gasket-Cleaner, Air
❷❸276 ❺	271716	1	Washer-Sealing
❷❸617 ❹❺	270344s	1	Seal-O Ring (Intake Manifold)
❷❸633 ❺	691321	1	Seal-Shaft, Choke Throttle
❷❸633A ❺	693867	1	Seal-Shaft, Choke Throttle
❷977	498261	1	Carburetor Gasket Set

Attachments and Accessories

For 20093C - Super Recycler Lawn Mower

Product Name	Model/Part
Bagging Blade	108-3759-03
Traction Assist Handle Kit	108-8120
Toro Walk Mower Cover	490-7462
Plain Walk Mower Cover	490-7463
Dethatcher Kit	59131

TORO®