FORM NO. 3316–246

TORO®

MODEL NO. 78355–3900001 & UP

PARTS CATALOG

WHEEL HORSE®

42" Recycler® Rotary Cutting Unit

G T

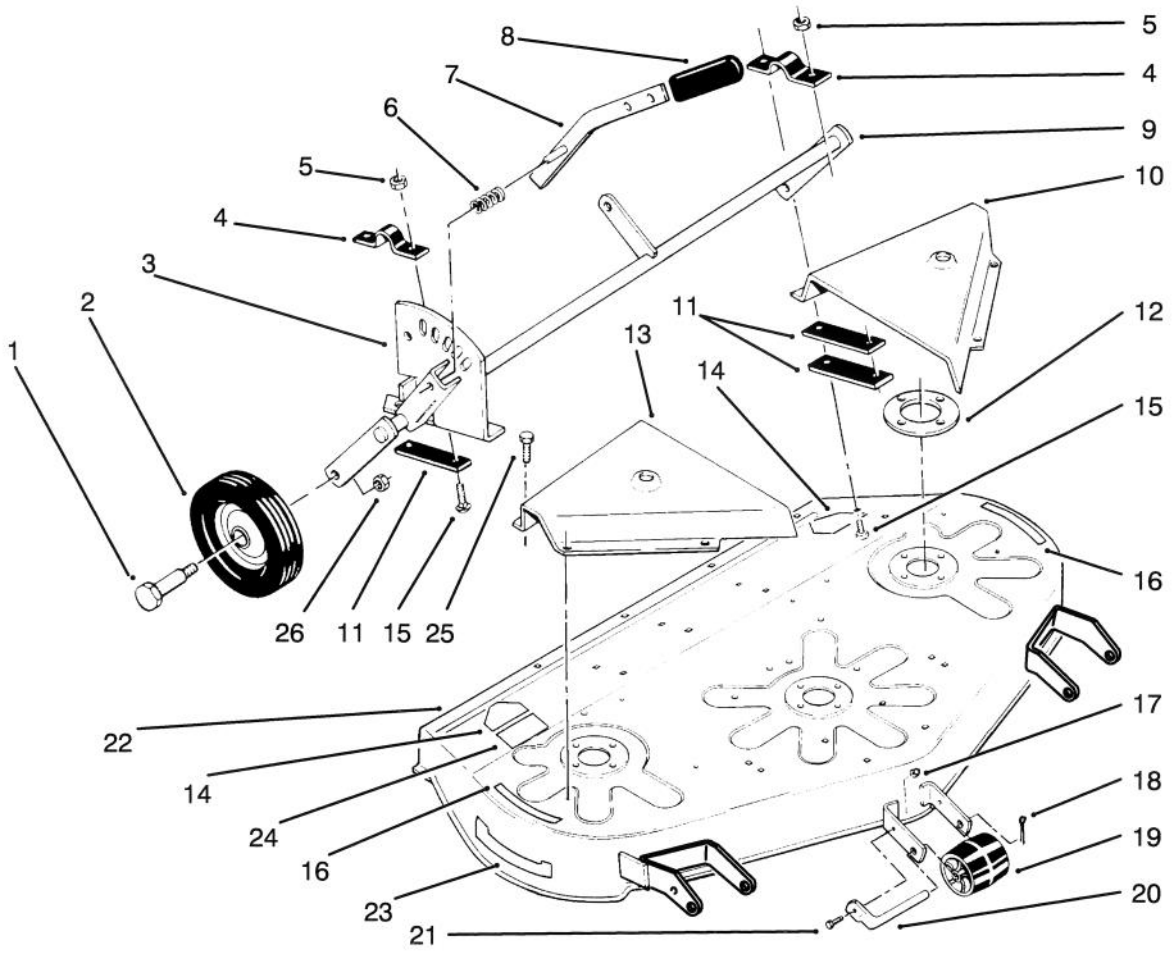

C–0884

DECK & COVER ASSEMBLY

Ref. No.	Part No.	Description	No. Used
1	5188	Bolt – Shoulder	2
2	110506	Wheel	2
3	106392	Quadrant	1
4	110841	Camp	2
5	3296–39	Nut – Lock	4
6	101853	Spring	1
7	115213	Lever	1
8	103712	Grip	1
9	79–5360	Gauge – Wheel Support	1
10	106638	Cover – Belt L.H.	1
11	110840	Strap	3
12	106117	Plate – Spindle	3
13	106409	Cover – Belt R.H.	1
14	43–8480	Decal – Danger	2

Ref. No.	Part No.	Description	No. Used
15	3231–25	Bolt – Carriage	4
16	76–4070	Decal – Danger	2
17	3296–42	Nut – Lock	3
18	3272–21	Pin – Cotter	3
19	108798	Roller	3
20	110847	Shaft – Roller	3
21	321–4	Bolt	3
22	92–7292	Deck – Mower (Incl. ref.# 14 & 16)	1
23	79–1301	Decal – Recycler	2
24	106748	Decal – Height of Cut	1
25	9266714	Bolt	8
26	32146–2	Nut – Lock	2

© The TORO Company –1993
All rights reserved.

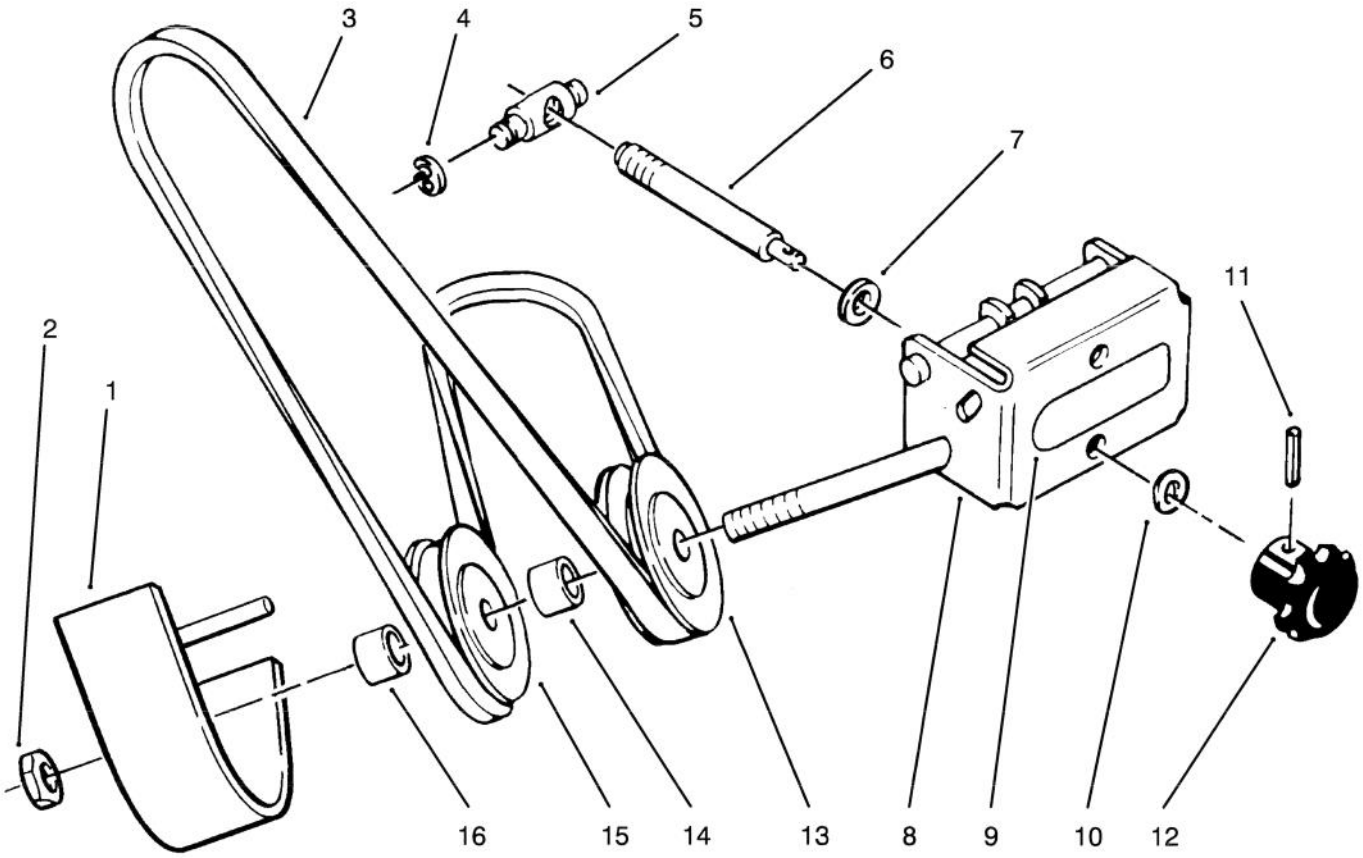

C–0885

DECK DRIVE BELT ATTACHMENT

Ref. No.	Part No.	Description	No. Used
1	102582	Cover – Belt	1
2	9150076	Nut – Lock	1
3	108834	Drive – Belt	1
4	105797	Ring – Retaining	2
5	101708	Trunion	1
6	101842	Rod – Adjustment	1
7	3256–24	Washer	1
8	101728	Support – Idler, Front	1
9	115197	Decal – Attach a Matic	1

Ref. No.	Part No.	Description	No. Used
10	108571	Washer – Spring	1
11	933156	Pin – Spirol	1
12	101851	Knob – Adjustment	1
13	104974	Pulley – Idler	1
14	101734	Spanner – Inner	
15	104975	Pulley – Idler, Flat	1
16	101757	Spacer – Outer	1
*	101657	Idler Assembly – Front (Incl. Ref. #1–16)	1

*Not Illustrated

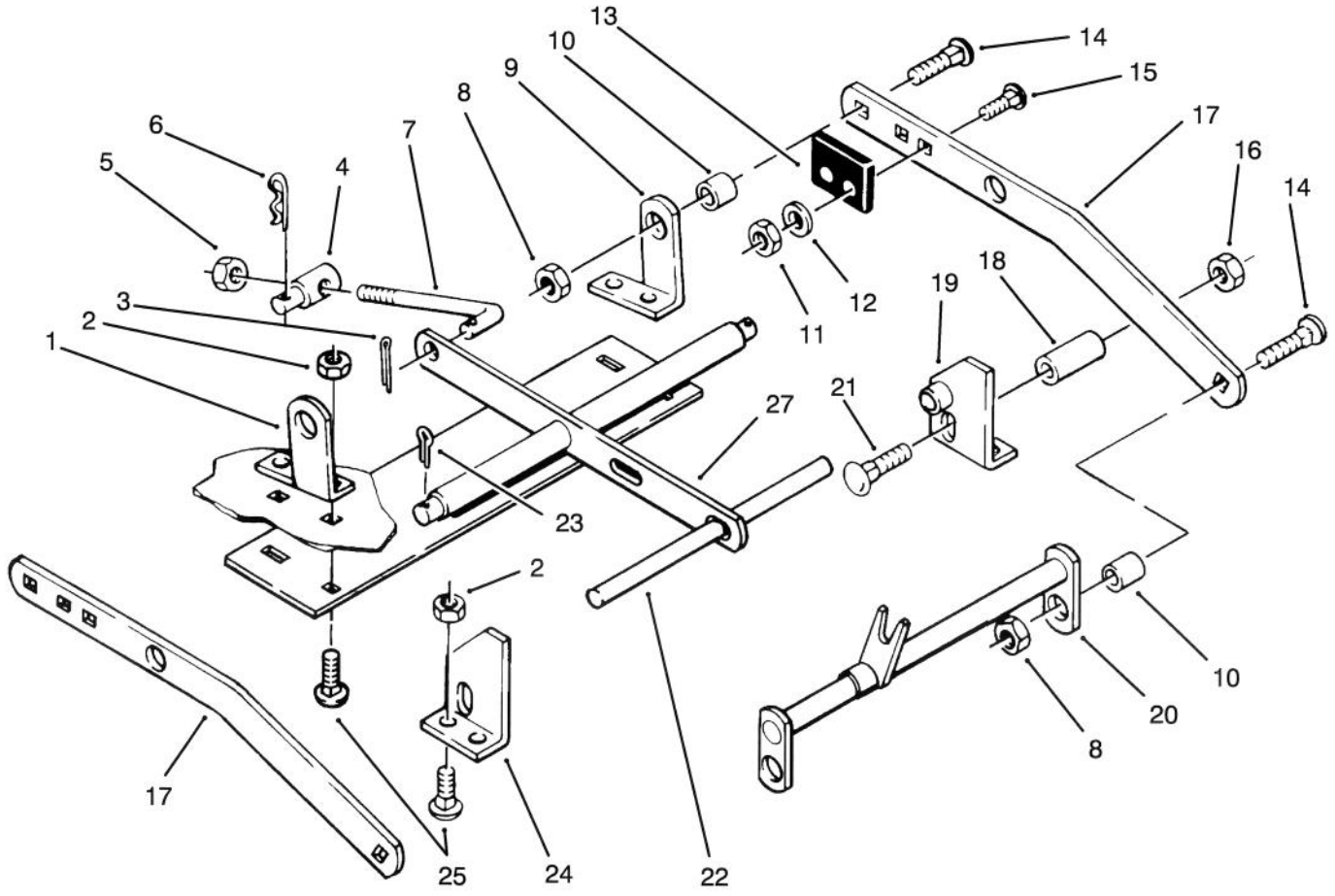

C–0886

SUSPENSION ASSEMBLY

Ref. No.	Part No.	Description	No. Used
1	107512	Bracket – Right Rear	1
2	3296–39	Nut – Lock	8
3	3272–6	Pin – Cotter	1
4	6739	Trunion	1
5	3296–39	Nut – Lock	1
6	9335044	Pin – Cotter	1
7	101828	Rod – Leveler	1
8	102809	Nut	4
9	107511	Bracket – Left Rear	1
10	111044	Spacer	4
11	3296–29	Nut – Lock	4
12	3256–3	Washer	4
13	102322	Bumper – Rubber	2

Ref. No.	Part No.	Description	No. Used
14	3231–25	Bolt – Carriage	4
15	3230–3	Bolt – Carriage	4
16	9156644	Nut	2
17	101777	Bar – Draft	2
18	9793604	Spacer – Transport Stop	2
19	102567	Bracket – Left Front	1
20	101758	Hitch	1
21	3232–3	Bolt – Carriage	2
22	102570	Shaft – Front	1
23	3272–12	Pin – Cotter	2
24	102566	Bracket – Right Front	1
25	3231–2	Bolt – Carriage	8
27	110268	Leveler	1

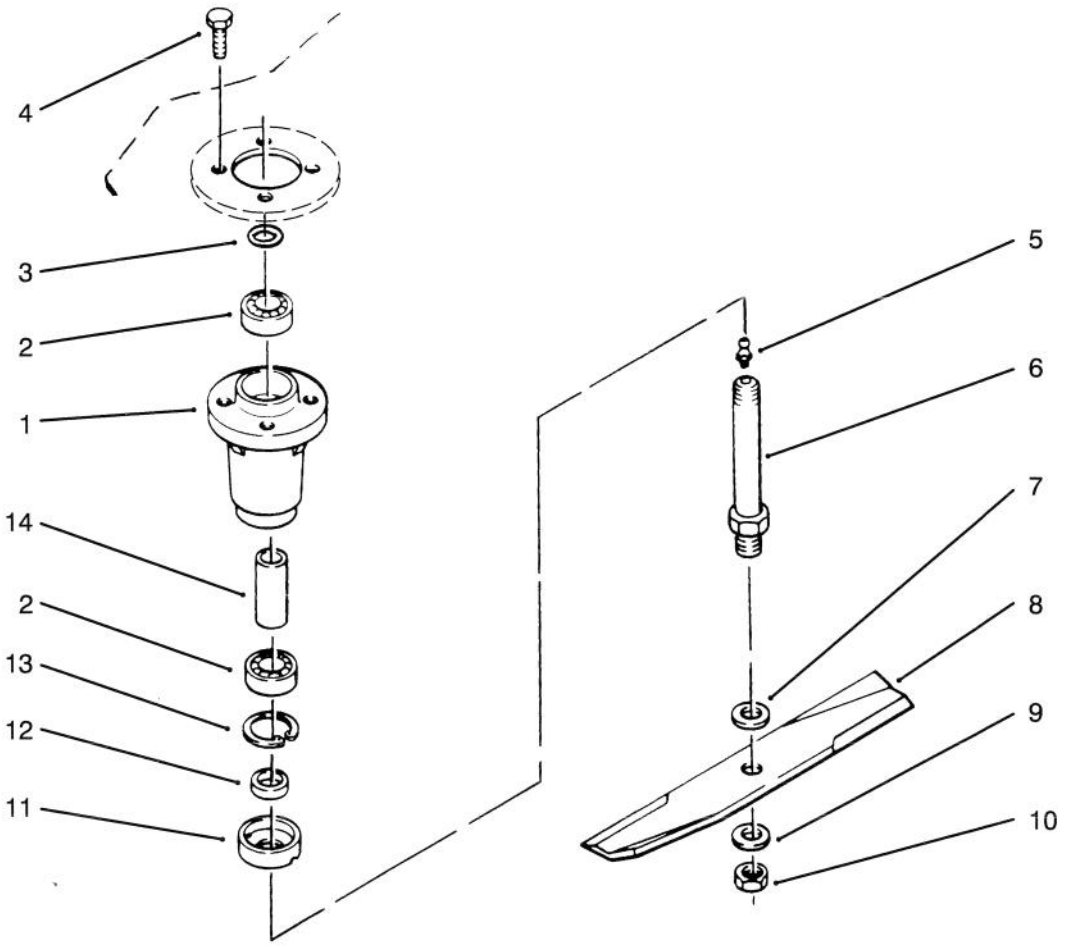

C–0887

SPINDLE & BLADE ASSEMBLY

Ref. No.	Part No.	Description	No. Used
1	114568	Housing – Spindle	1
2	109966	Bearing – Ball	2
3	971015	"O"Ring	1
4	9080326	Bolt	4
5	302–5	Fitting – Grease	1
6	112674	Shaft – Spindle	1
7	9202574	Washer – Special	1
8	79–2920	Blade	1

Ref. No.	Part No.	Description	No. Used
9	3256–28	Washer	1
10	3220–7	Nut – Jam	1
11	106067	Cup – Spindle	1
12	106068	Spacer – Blade	1
13	32120–42	Ring – Retaining Int.	1
14	116085	Spacer	1
*	110172	Spindle Assy. (Incl. ref. #1, 2, 3, 5, 6 & 11–14)	3

*Not Illustrated

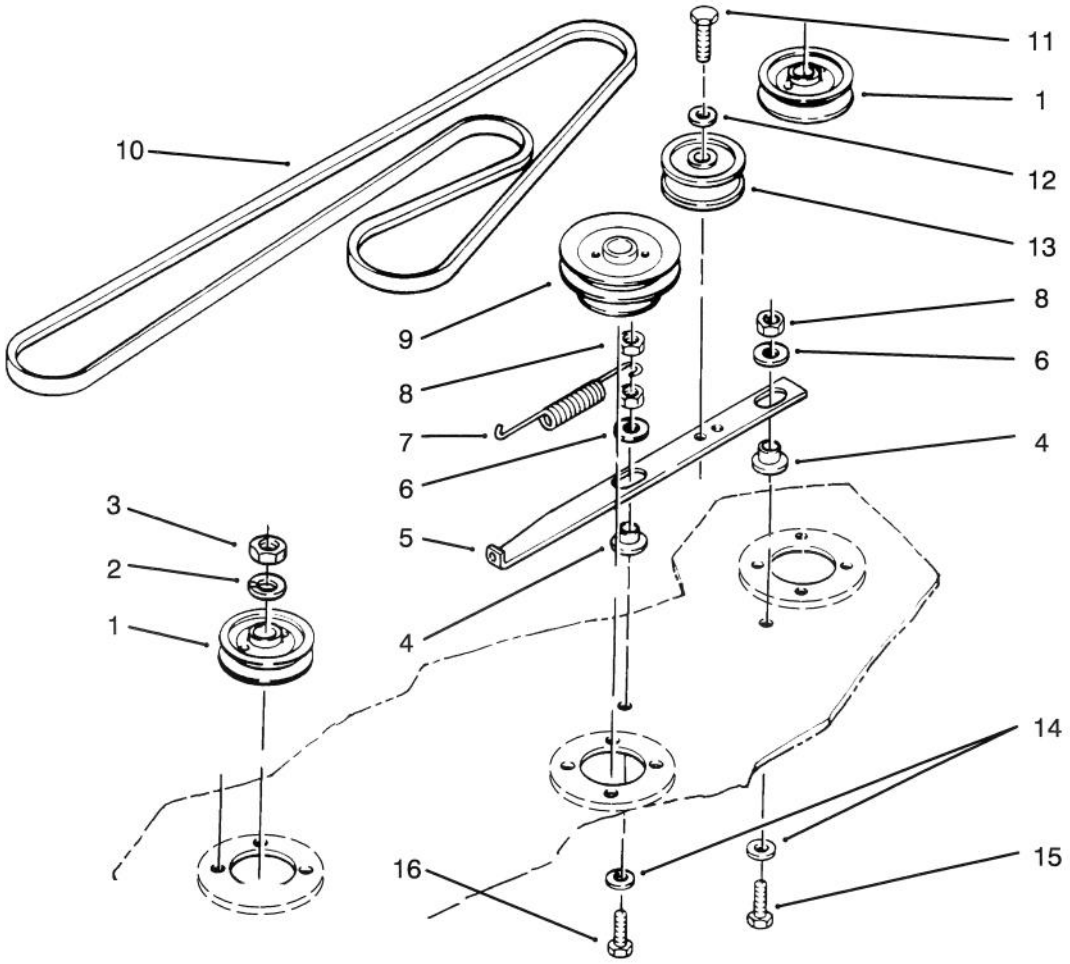

C–0888

DECK BELT & PULLEYS

Ref. No.	Part No.	Description	No. Used
1	109967	Pulley – Outer	2
2	3253–8	Washer – Lock	3
3	3220–6	Nut – Jam	3
4	107674	Bushing –Spacer	2
5	106120	Bar – Idler Support	1
6	107675	Washer – Special	2
7	100071	Spring	1
8	3296–39	Nut – Lock	3

Ref. No.	Part No.	Description	No. Used
9	110148	Pulley – Center	1
10	106125	"V"Belt	1
11	323–7	Bolt	1
12	3253–21	Washer –Lock	1
13	112425	Pulley – Idler, Flat	1
14	2844	Washer – Special	2
15	323–7	Bolt	1
16	323–9	Bolt	1

3316–246

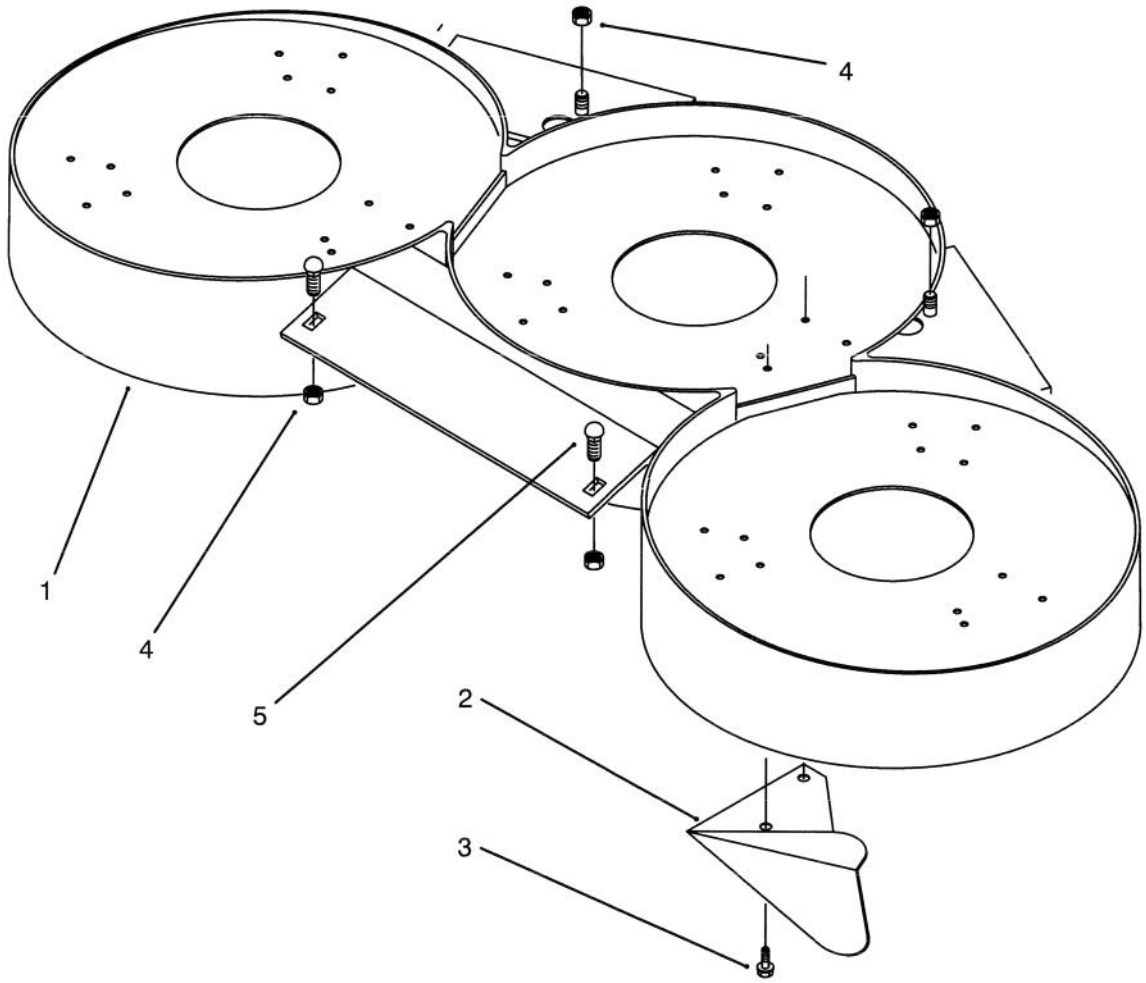

C–0844

BAFFLE ASSEMBLY

Ref. No.	Part No.	Description	No. Used
1	79–2960	Baffle	1
2	80–2630	Kicker	9
3	9266714	Screw	18

Ref. No.	Part No.	Description	No. Used
4	3296–39	Nut – Lock	4
5	3231–25	Bolt – Carriage	2

TORO PART NUMBER INDEX

Part No.	Description	Pg. No.	Ref. No.	Qty.
2844	Washer – Special	5	14	2
5188	Bolt – Shoulder	1	1	2
6739	Trunion	3	4	1
100071	Spring	5	7	1
101657	Idler Assembly – Front	2	*	1
101708	Trunion	2	5	1
101728	Support – Idler, Front	2	8	1
101734	Spanner – Inner	2	14	
101757	Spacer – Outer	2	16	1
101758	Hitch	3	20	1
101777	Bar – Draft	3	17	2
101828	Rod – Leveler	3	7	1
101842	Rod – Adjustment	2	6	1
101851	Knob – Adjustment	2	12	1
101853	Spring	1	6	1
102322	Bumper – Rubber	3	13	2
102566	Bracket – Right Front	3	24	1
102567	Bracket – Left Front	3	19	1
102570	Shaft – Front	3	22	1
102582	Cover – Belt	2	1	1
102809	Nut	3	8	4
103712	Grip	1	8	1
104974	Pulley – Idler	2	13	1
104975	Pulley – Idler, Flat	2	15	1
105797	Ring – Retaining	2	4	2
106067	Cup – Spindle	4	11	1
106068	Spacer – Blade	4	12	1
106117	Plate – Spindle	1	12	3
106120	Bar – Idler Support	5	5	1
106125	V–Belt	5	10	1
106392	Quadrant	1	3	1
106409	Cover – Belt R.H.	1	13	1
106638	Cover – Belt L.H.	1	10	1
106748	Decal – Height of Cut	1	24	1
107511	Bracket – Left Rear	3	9	1
107512	Bracket – Right Rear	3	1	1
107674	Bushing –Spacer	5	4	2
107675	Washer – Special	5	6	2
108571	Washer – Spring	2	10	1
108798	Roller	1	19	3
108834	Drive – Belt	2	3	1
109966	Bearing – Ball	4	2	2
109967	Pulley – Outer	5	1	2
110148	Pulley – Center	5	9	1
110172	Spindle Assembly	4	*	3
110268	Leveler	3	27	1
110506	Wheel	1	2	2
110840	Strap	1	11	3
110841	Camp	1	4	2
110847	Shaft – Roller	1	20	3
111044	Spacer	3	10	4
112425	Pulley – Idler, Flat	5	13	1
112674	Shaft – Spindle	4	6	1
114568	Housing – Spindle	4	1	1
115197	Decal – Attach a Matic	2	9	1
115213	Lever	1	7	1
116085	Spacer	4	14	1
933156	Pin – Spirol	2	11	1
971015	O–Ring	4	3	1
9080326	Bolt	4	4	4
9150076	Nut	2	2	1
9156644	Nut	3	16	2
9202574	Washer – Special	4	7	1
9266714	Bolt	1	25	8
9266714	Screw	6	3	18
9335044	Pin – Cotter	3	6	1
9793604	Spacer – Transport Stop	3	18	2
43–8480	Decal – Danger	1	14	2
76–4070	Decal – Danger	1	16	2
79–1301	Decal – Recycler	1	23	2
79–2920	Blade	4	8	1
79–2960	Baffle	6	1	1
79–5360	Gauge – Wheel Support	1	9	1
80–2630	Kicker	6	2	9
92–7292	Deck – Mower	1	22	1
302–5	Fitting – Grease	4	5	1
321–4	Bolt	1	21	3
323–7	Bolt	5	11	1
323–7	Bolt	5	15	1
323–9	Bolt	5	16	1
3220–6	Nut	5	3	3
3220–7	Nut	4	10	1
3230–3	Bolt – Carriage	3	15	4
3231–2	Bolt – Carriage	3	25	4
3231–25	Bolt – Carriage	6	5	2
3231–25	Bolt – Carriage	3	14	4
3231–25	Bolt – Carriage	1	15	4
3232–3	Bolt – Carriage	3	21	2
3253–8	Washer – Lock	5	2	3
3253–21	Washer –Lock	5	12	1
3256–3	Washer	3	12	4
3256–24	Washer	2	7	1
3256–28	Washer – Special	4	9	1
3272–6	Pin – Cotter	3	3	1
3272–12	Pin – Cotter	3	23	2
3272–21	Pin – Cotter	1	18	3
3296–29	Nut	3	11	4
3296–39	Nut	3	2	4
3296–39	Nut	1	5	4
3296–39	Nut	3	5	1
3296–39	Nut	5	8	3
3296–39	Nut – Lock	6	4	4
3296–42	Nut	1	17	3
32120–42	Ring – Retaining Int.	4	13	1
32146–2	Nut	1	26	2

*Not Illustrated

PRODUCT CHANGES

In an effort to make improvements available to TORO owners as quickly as possible, minor changes are incorporated into Toro's products from time to time that do not become immediately shown in the Parts Catalog. If such a change has been made in your unit, which is not reflected in your manual, see your TORO Distributor or his Authorized TORO Service Dealer for information and part numbers.

COUNTRIES OTHER THAN THE UNITED STATES OR CANADA

Customers who have purchased TORO products exported from the United States or Canada should contact their Toro Distributor (Dealer) to obtain guarantee policies for your country, province or state. If for any reason you are dissatisfied with your Distributor's service or have difficulty obtaining guarantee information, contact the TORO importer. If all other remedies fail, you may contact us at The Toro Company.

MAINTENANCE RECORD

Date								

Compliance with Radio Interference Regulations Certified.
Certifie Conforme au Reglement sur le Brouillage Radioelectrique.

Litho in U.S.A.