FORM NO. 3316–253

TORO®

MODEL NO. 78230–3900001 & UP

PARTS CATALOG

42" (107cm) Cutting Unit (Yard Tractors)
WHEEL HORSE®

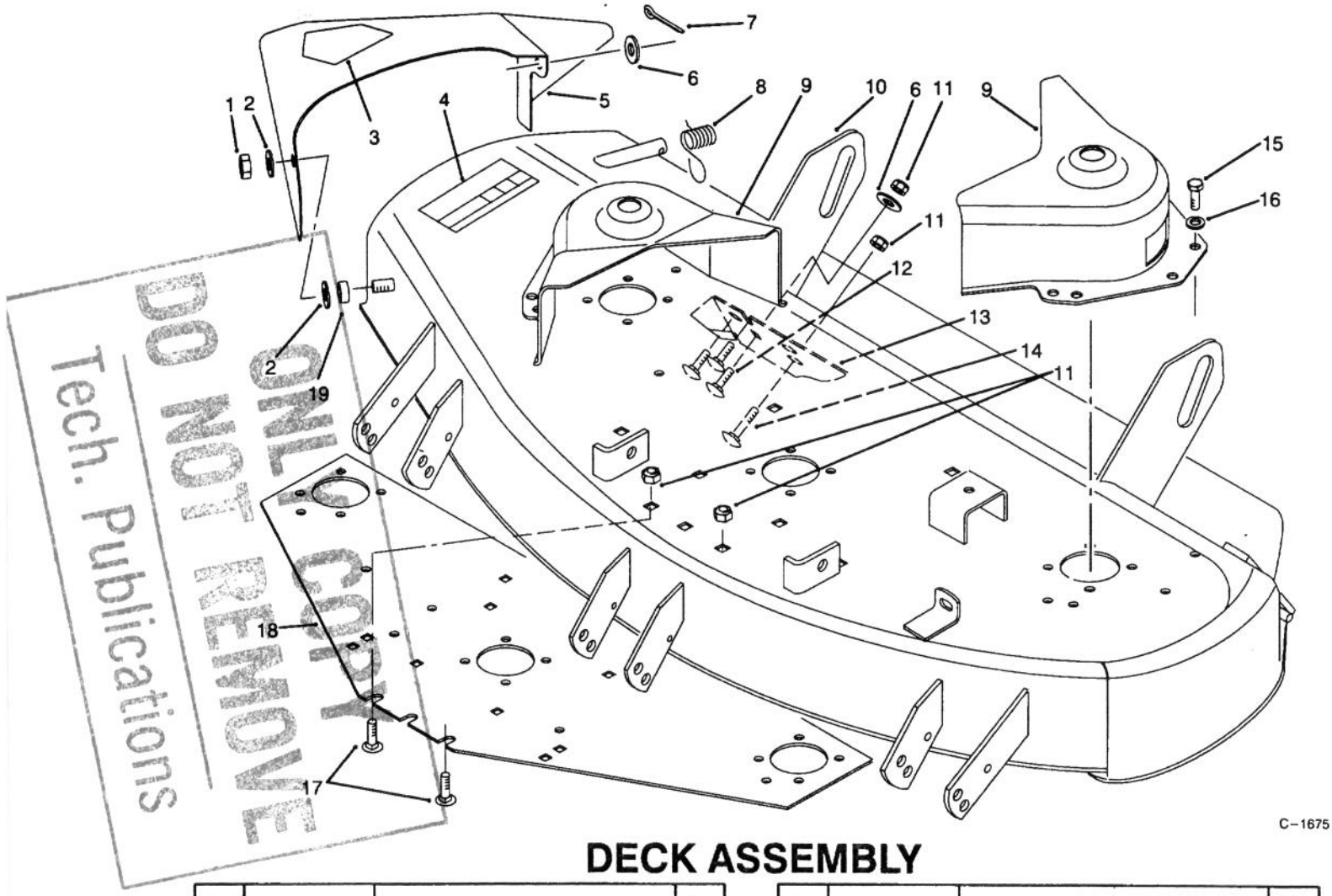

Tech. Publications
DO NOT REMOVE
ONLY COPY

C–1675

DECK ASSEMBLY

Ref. No.	Part No.	Description	No. Used
1	915236	Nut – Jam	1
2	116083	Washer – Nylon	2
3	54–9220	Decal – Danger	1
4	66–1340	Decal – Danger	1
5	88–2750	Chute/Decal Assembly	1
6	3256–26	Washer – Flat	4
7	3272–10	Pin – Cotter	1
8	116082	Spring – Deflector	1
9	78–6891	Cover – Belt	2
10	92–8014	Deck/Safety Decal Assy.	1

Ref. No.	Part No.	Description	No. Used
11	3296–39	Nut – Lock	9
12	3231–22	Bolt – Carriage	3
13	79–2831	Wear Plate – R.H.	1
14	3231–5	Bolt – Carriage	2
15	926671	Screw – Cap Hex. Hd.	4
16	3256–22	Washer – Flat	4
17	3231–1	Bolt – Carriage	4
18	78–8530	Plate – Reinforcement	1
19	116080	Bushing	1

© The TORO Company – 1993
All Rights Reserved

TPS

3316–253

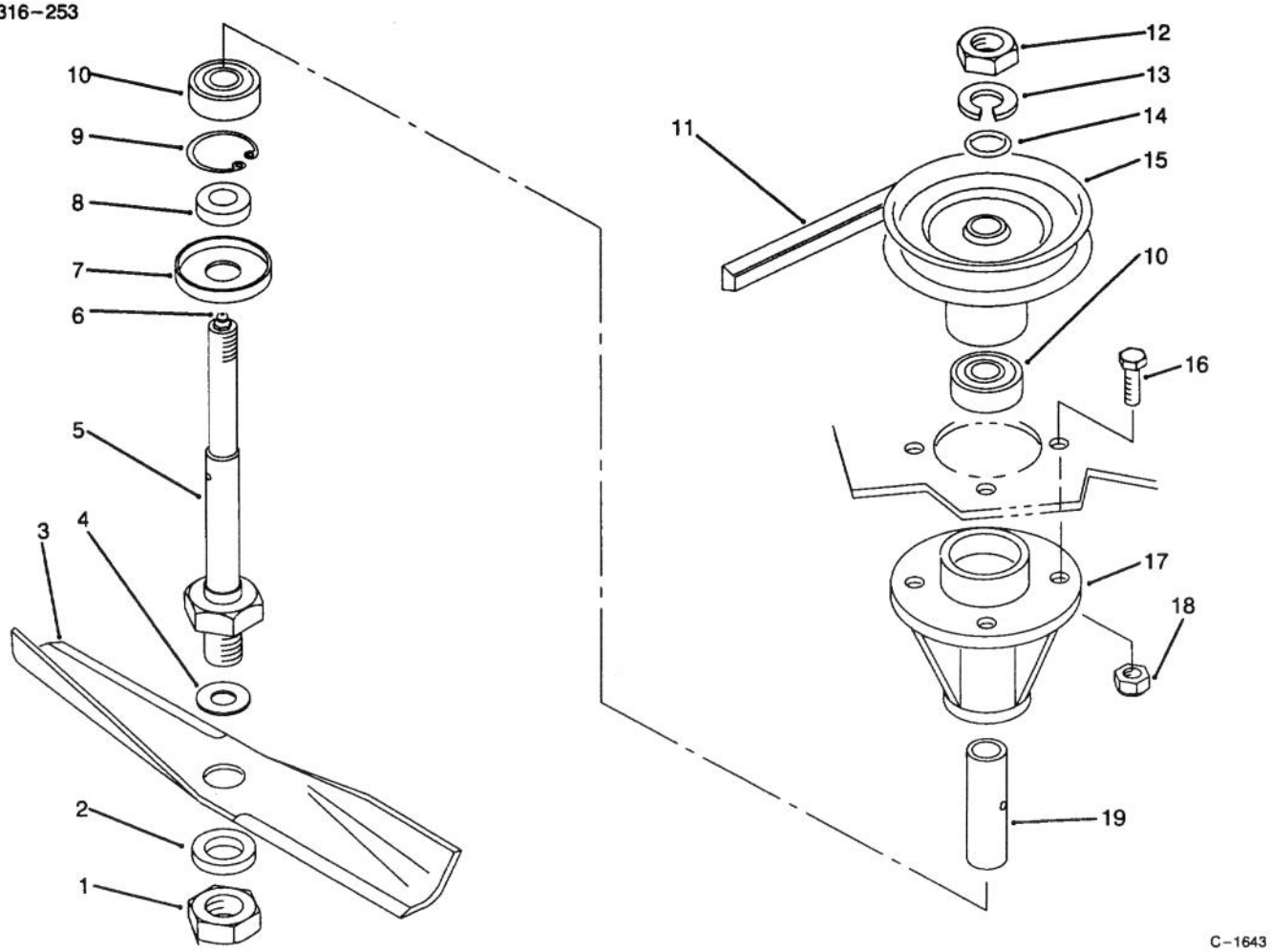

C–1643

SPINDLE ASSEMBLY

Ref. No.	Part No.	Description	No. Used
1	3220–7	Nut – Hex.	1
2	3256–28	Washer – Flat	1
3	106636	Kit – Blade (Set of 3)	1
4	92–0257	Washer	1
5	78–6710	Shaft – Spindle	1
6	302–5	Fitting – Grease	1
7	106077	Cup – Spindle	1
8	106068	Spacer	1
9	32120–42	Ring – Retaining	1

Ref. No.	Part No.	Description	No. Used
10	109966	Bearing	2
11	78–6240	V–Belt	1
12	3220–6	Nut – Hex.	1
13	3253–8	Washer – Lock	1
14	971015	O–Ring	1
15	78–1210	Pulley – Spindle	1
16	908032	Screw – Cap Hex. Hd.	4
17	114568	Housing – Spindle	1
18	3296–39	Nut – Lock	4
19	116085	Spacer	1

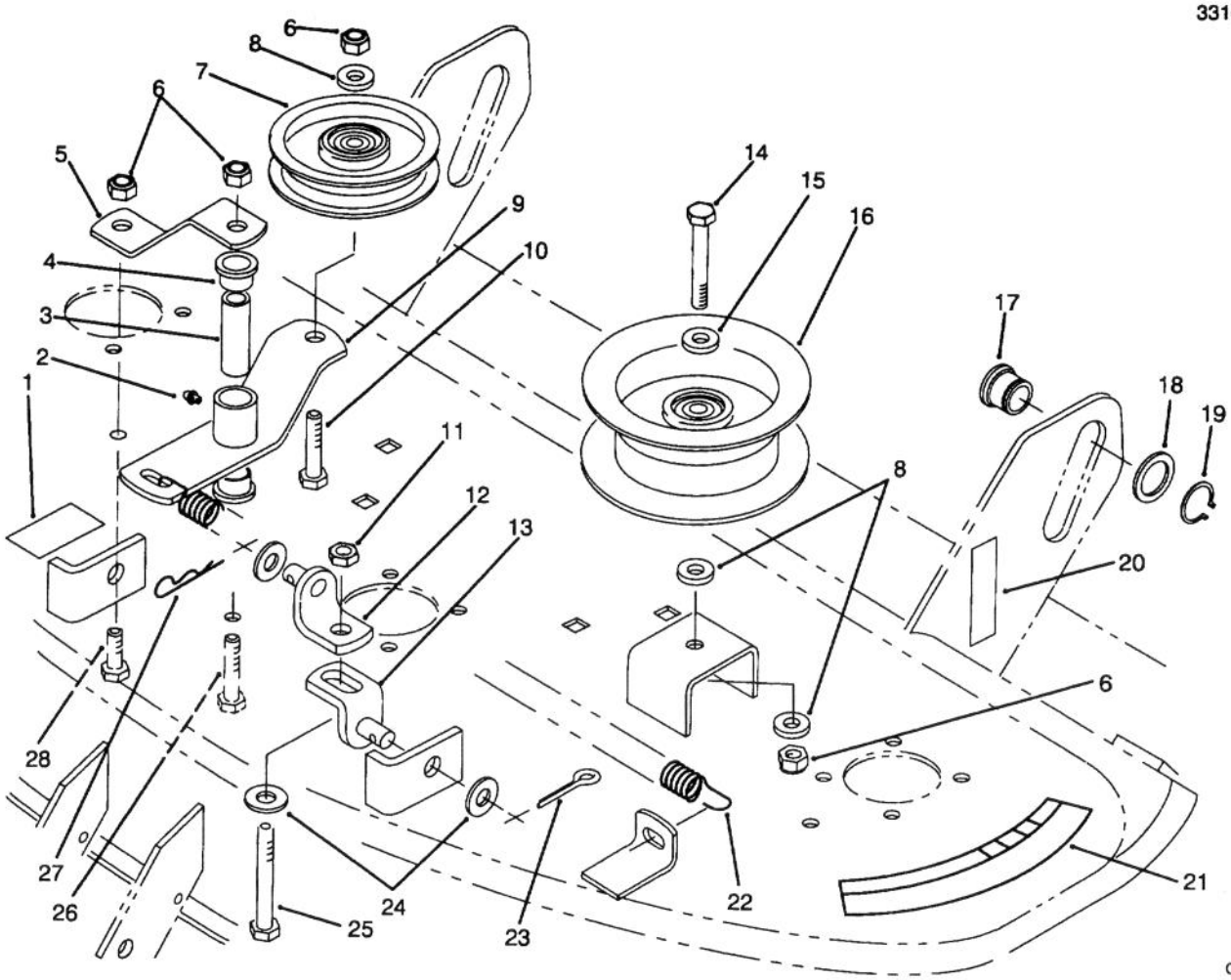

C-1642

PULLEYS & IDLER ARM ASSEMBLY

Ref. No.	Part No.	Description	No. Used
1	116286	Decal – Belt Routing	1
2	302-26	Fitting – Grease	1
3	79-2760	Spacer	1
4	109859	Bushing	2
5	78-3140	Strap – Brace	1
6	3296-39	Nut – Lock	4
7	115119	Pulley – Idler	1
8	3256-24	Washer – Flat	3
9	78-3150	Arm W.A. – Idler	1
10	323-9	Screw – Cap Hex. Hd.	1
11	3218-5	Nut – Hex.	1
12	86-9250	Bracket W.A. – Lift, Upper	1
13	86-9240	Bracket W.A. – Lift, Lower	1
14	323-11	Screw – Cap Hex. Hd.	1

Ref. No.	Part No.	Description	No. Used
15	2844	Washer	1
16	78-8250	Pulley – Idler	1
17	78-7340	Roller – Lift	2
18	920239	Washer	2
19	32151-29	Ring – Retaining	2
20	115196	Decal – Attach-A-Matic	2
21	76-4070	Decal – Danger	1
22	116172	Spring – Extension	1
23	3272-21	Pin – Cotter	1
24	3256-26	Washer – Flat	3
25	325-13	Screw – Cap Hex. Hd.	1
26	323-14	Screw – Cap Hex. Hd.	1
27	933506	Pin – Cotter, Hair	1
28	323-6	Screw – Cap Hex. Hd.	1

3316–253

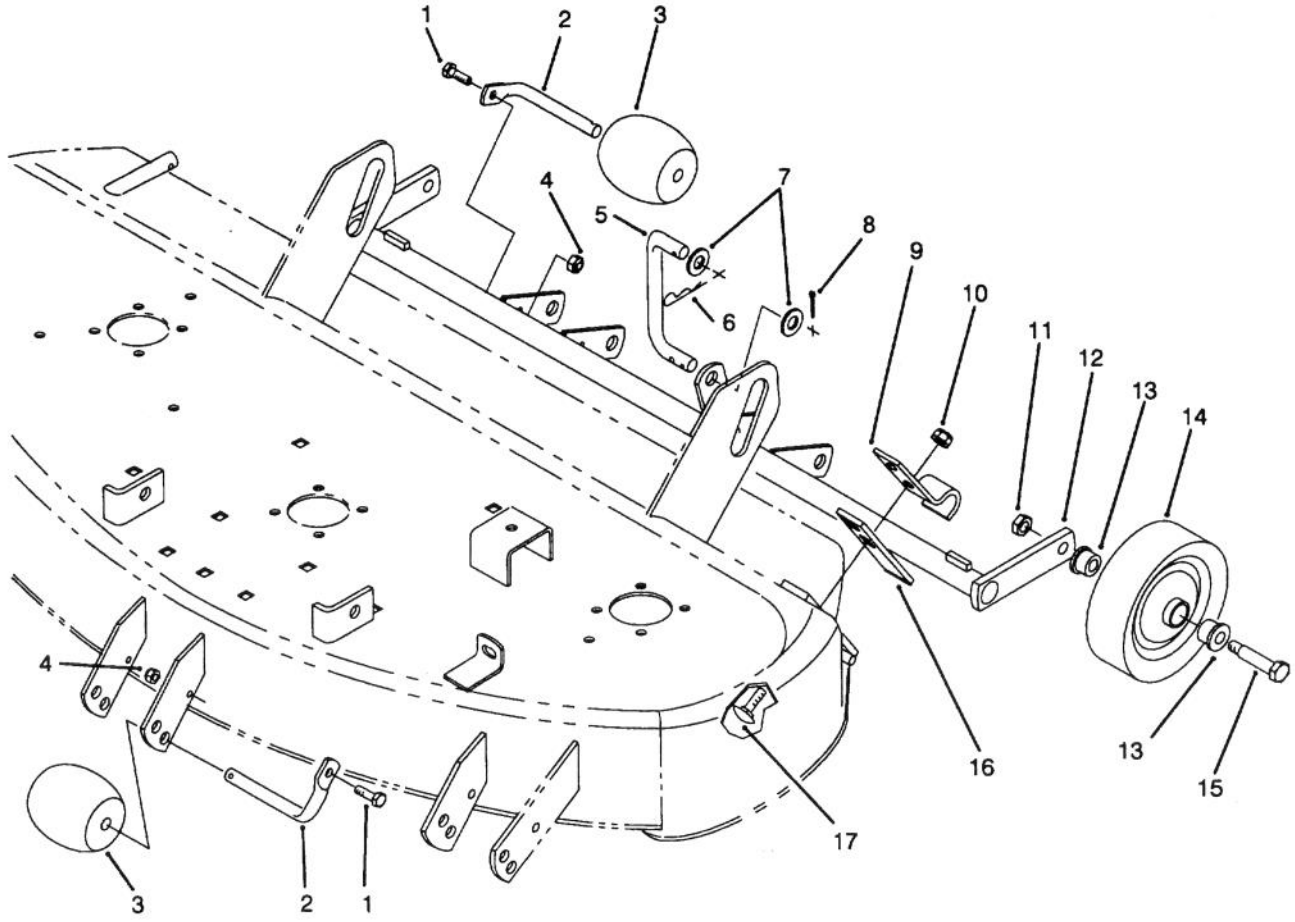

C–1644

GAGE WHEEL & ROLLER ASSEMBLY

Ref. No.	Part No.	Description	No. Used
1	908004	Screw – Cap Hex. Hd.	5
2	118960	Shaft – Roller	5
3	29–4820	Roller	5
4	3296–42	Nut – Lock	5
5	78–6681	Link – Rear	1
6	933507	Pin – Cotter, Hair	2
7	3256–26	Washer – Flat	2
8	3272–21	Pin – Cotter	1
9	110837	Clamp	2
10	3296–39	Nut – Lock	2

Ref. No.	Part No.	Description	No. Used
11	32146–2	Nut – Hex.	2
12	78–6661	Support W.A. – Wheel, Gage	1
13	5306	Bushing	4
14	110506	Assembly – Wheel (Incl. Ref. #13)	2
15	5188	Bolt – Wheel	2
16	110838	Bar	2
17	3231–4	Bolt – Carriage	2