FORM NO. 3316–299 Rev. B

TORO®

MODEL NO. 22040–4900001–5900001 & UP

PARTS CATALOG

PROLINE 21”

RECYCLER® Mower

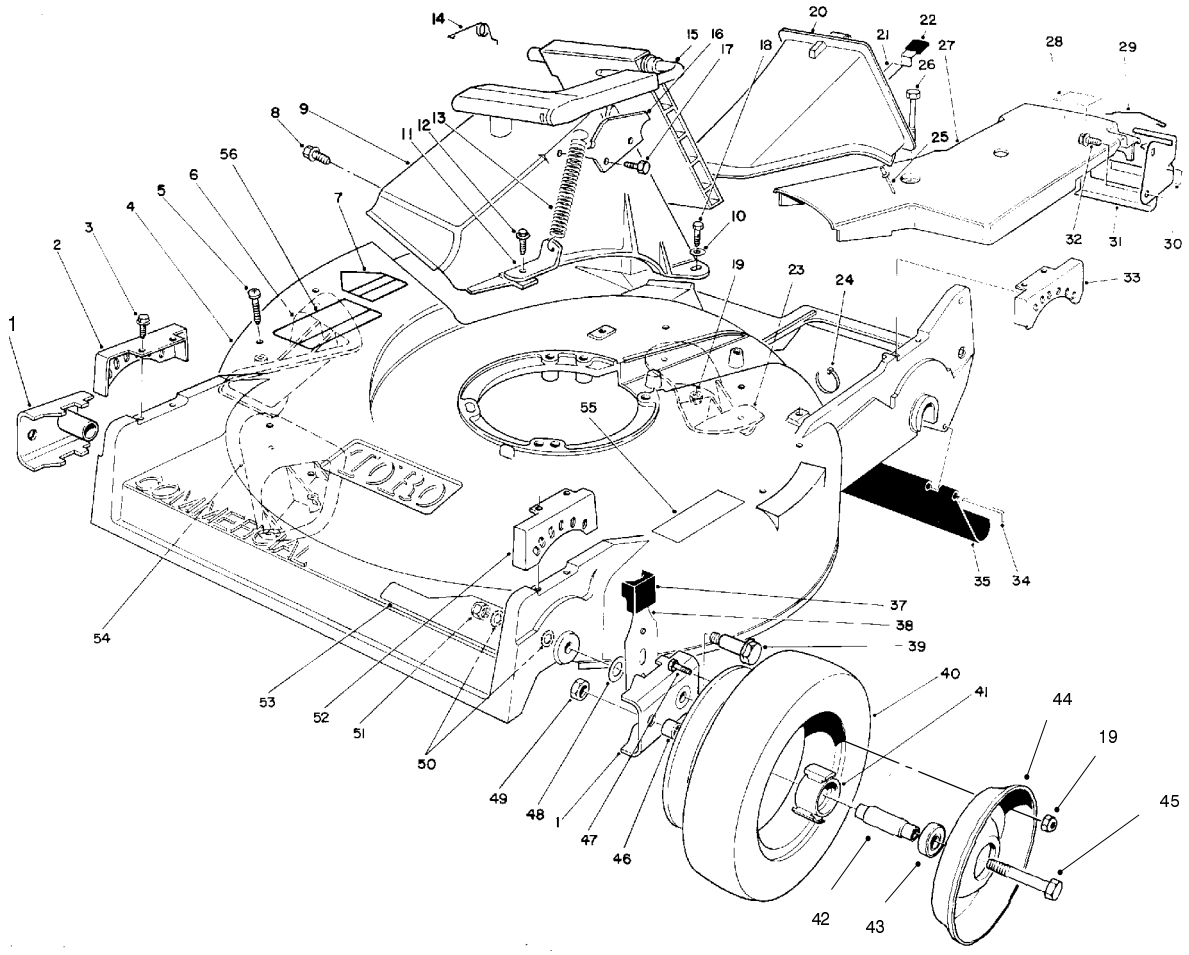

C–0660A

HOUSING ASSEMBLY

Ref. No.	Part No.	Description	No. Used
1	61–8300	Pivot Arm Assembly	2
2	49–8770	Quadrant – Front R.H.	1
3	49–2040	Screw – Thread Forming	8
4	14–9499	Housing – Commercial (Incl. Ref. # 5–7, 23, & 54–56)	1
5	32144–111	Screw – Pan Hd.	6
6	92–1730	Kicker	1
7	39–5770	Decal – Danger	1
8	46–6810	Screw – Thread Forming	1
9	82–9150	Chute – Discharge	1
10	3256–22	Washer – Flat	2
11	71–9350	Bracket – Spring	1
12	46–6811	Screw – Thread Forming	1
13	76–4660	Spring	1
14	80–3770	Retainer – Door	1
15	77–0200	Door Assembly	1
16	76–4570	Plate – Latch	1
17	46–8090	Screw – Self Tapping	2

Ref. No.	Part No.	Description	No. Used
18	321–7	Screw – Hex Hd. Cap	2
19	3296–42	Nut – Lock	10
20	77–0500	Plug – Discharge (Incl. Ref. #21, 22, & 25)	1
21	76–4640	Latch – Plug	1
22	76–4650	Grip – Latch	1
23	92–1750	Kicker	1
24	3290–378	Tie – Cable	1
25	3295–35	Rivet	1
26	37–7260	Screw – Special	2
27	74–1770	Cover – Belt	1
28	52–2620	Label – Grease	1
29	46–7030	Retainer – Cable	1
30	74–1970	Decal – Traction Drive	1
31	74–1741	Bracket – Traction Adj.	1
32	32144–70	Screw – Thread Forming	1
33	49–8740	Quadrant – Rear L.H.	1
*	49–8750	Quadrant – Rear R.H.	1
34	33–3208	Rod – Shield	1

*Not Illustrated

© The TORO Company –1993 Rev. 1995
All Rights Reserved

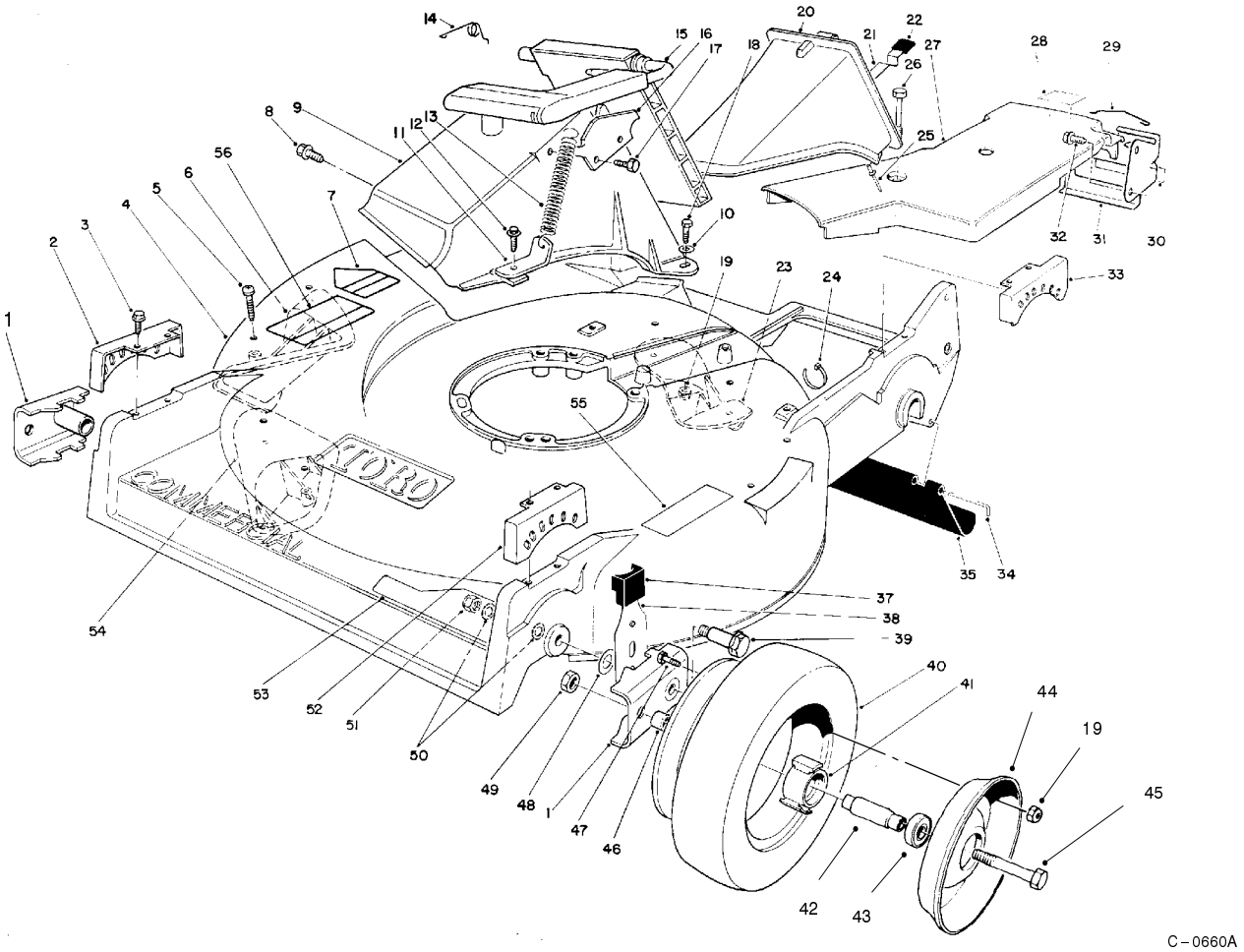

HOUSING ASSEMBLY (Continued)

Ref. No.	Part No.	Description	No. Used
35	44–0580	Shield – Rear Safety	1
37	25–7740	Knob – Arm	2
38	66–7560	Spring Arm Ass'y – Front	2
39	27–6232	Screw – Pivot	2
40	53–7740	Tire	2
41	52–2410	Hub	2
42	52–2440	Spacer – Bearing	2
43	52–2450	Bearing – Wheel	4
44	53–7780	Plate – Wheel Half	4
45	323–12	Screw – Hex Hd. Cap	2
46	52–2480	Spacer – Wheel	2
47	321–2	Screw – Hex Hd. Cap	8

Ref. No.	Part No.	Description	No. Used
48	257–3	Washer – Pivot	2
49	32152–2	Nut – Lock	2
50	40–1940	Washer – Hardened	4
51	3296–6	Nut – Lock	2
52	49–8760	Quadrant – Front L.H.	1
53	92–1796	Decal – Recycler	1
54	92–1720	Kicker	1
55	71–1280	Decal – Safety Instructions	1
56	71–9370	Decal – Danger Covers	1
*	53–7720	Wheel & Tire Assembly (Incl. Ref. #19, 40, 41, 44, & 47)	2

*Not Illustrated

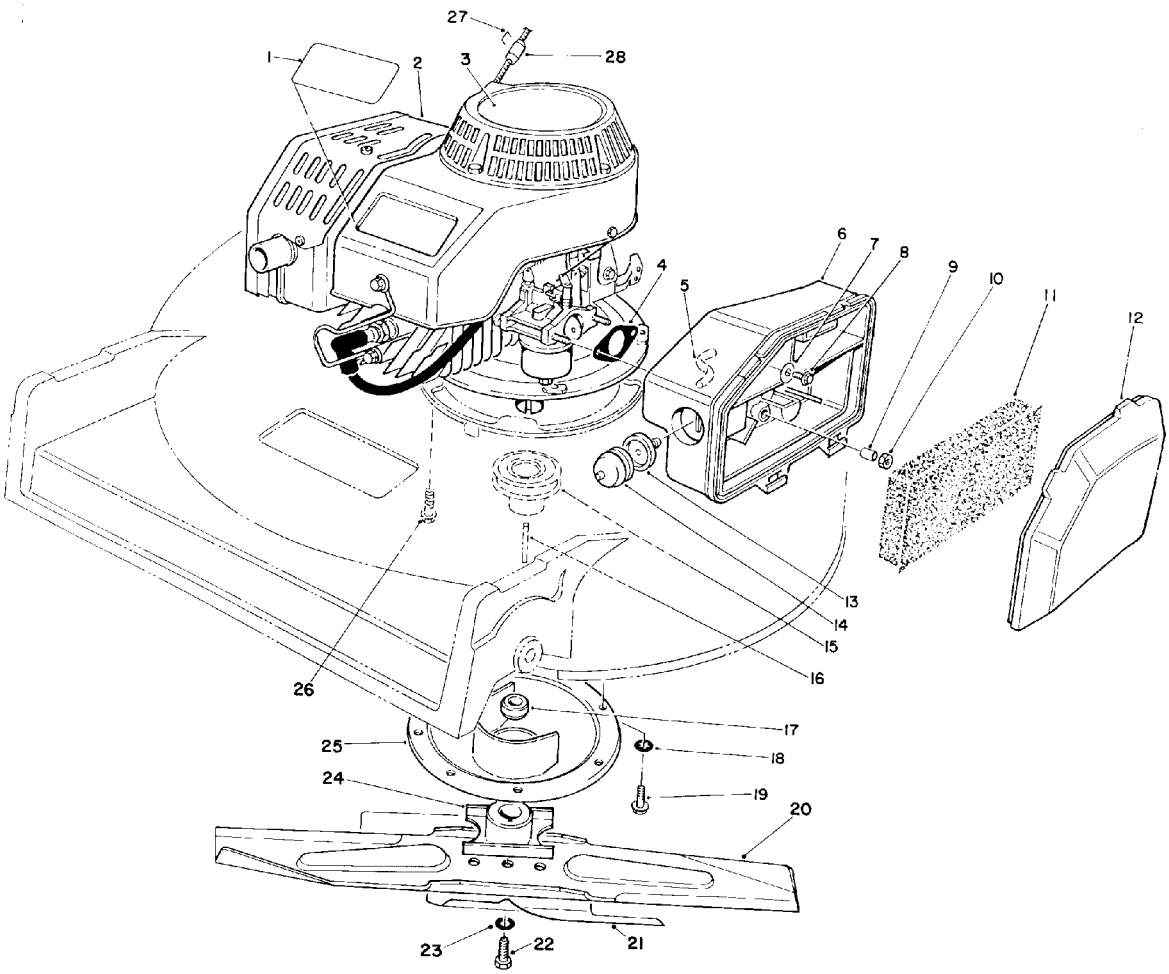

ENGINE ASSEMBLY

Ref. No.	Part No.	Description	No. Used
1	71–1260	Decal – Pro Line	1
2	61–8062	Engine – Complete	1
3	77–0040	Decal – Recoil	1
4	81–0090	Gasket	1
5	44–3172	Hose – Primer	1
6	63–9330	Body – Air Cleaner	1
7	3256–16	Washer	1
8	51–2690	Screw – Hex. Flange Hd.	1
9	62–3980	Sleeve	2
10	50–7180	Nut – Lock	2
11	63–9380	Filter – Foam	1
12	63–9340	Cover – Air Cleaner	1
13	44–2750	Body – Primer	1
14	66–7460	Bulb – Primer	1

Ref. No.	Part No.	Description	No. Used
15	46–7910	Pulley – Driver	1
16	27–6300	Key – Square	1
17	52–2190	Spacer – Retainer, Blade	1
18	3254–6	Washer – Internal Tooth	3
19	32144–70	Screw – Thread Forming	3
20	14–9419	Blade	1
21	92–1599	Stiffener – Blade	1
22	26–0670	Screw – Blade	1
23	3253–22	Washer – Lock	1
24	52–2170	Retainer – Blade	1
25	65–5860	Protector – Crankshaft	1
26	66–9300	Screw – Hex. Flange Hd.	4
†27		Staple	1
28	47–2480	Stop – Recoil	1

†Obtain Locally

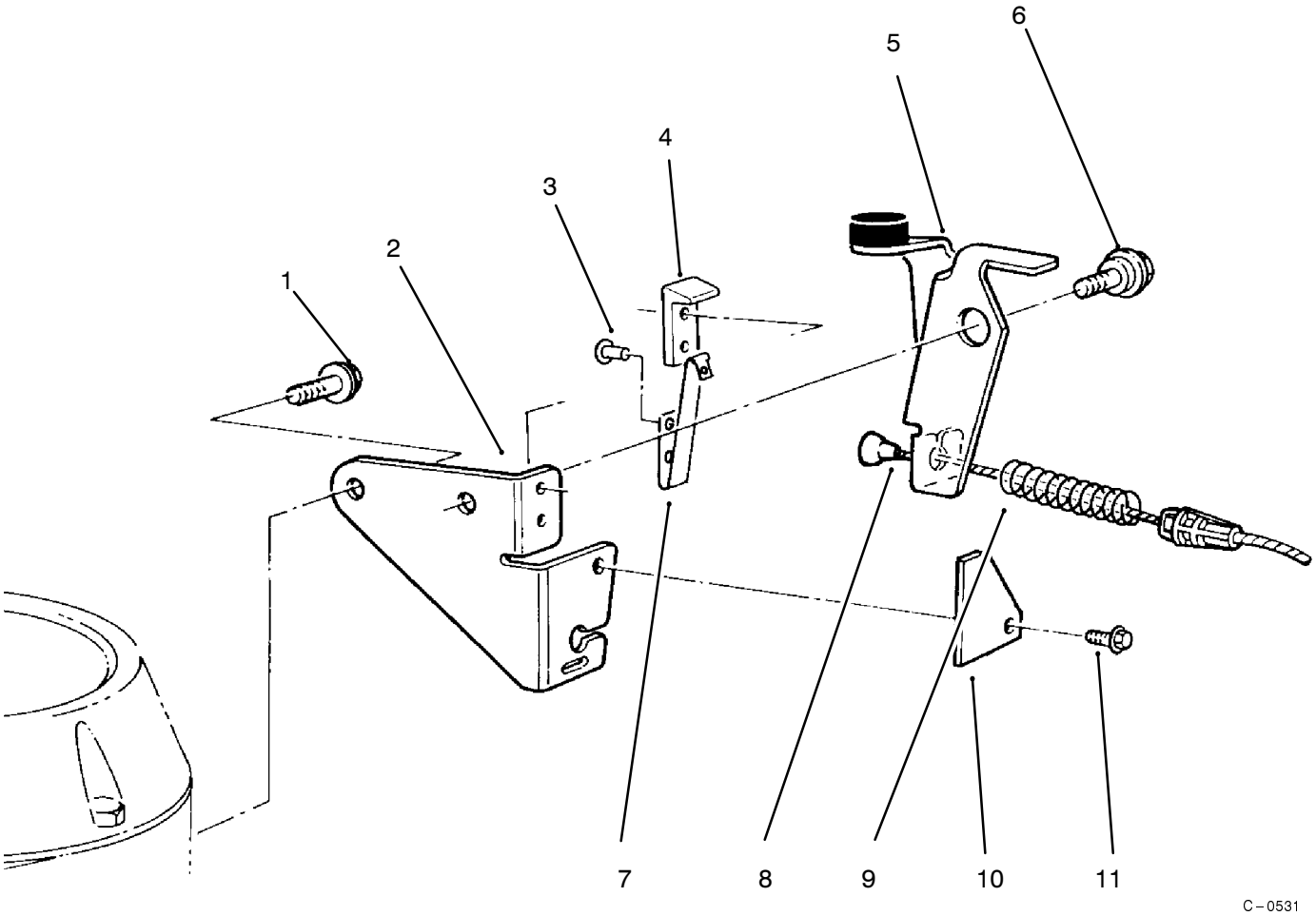

BRAKE ASSEMBLY

Ref. No.	Part No.	Description	No. Used
1	32144–10	Screw – Self Tapping	1
2	84–7820	Plate – Mounting	1
3	3290–459	Rivet	2
4	77–5260	Strap – Insulation	1
5	66–5380	Brake Plate Assembly	1
6	92–9698	Screw – Shoulder, Metric	1
7	60–9010	Strap – Ground	1

Ref. No.	Part No.	Description	No. Used
8	85–6903	Cable – Brake	1
9	66–5370	Spring – Compression	1
10	53–4690	Stop – Ground Strap	1
11	32144–112	Screw – Self Tapping	1
*	14–6009	Mounting Plate Assembly (Incl. Ref. #2–4 & 7)	1

*Not Illustrated

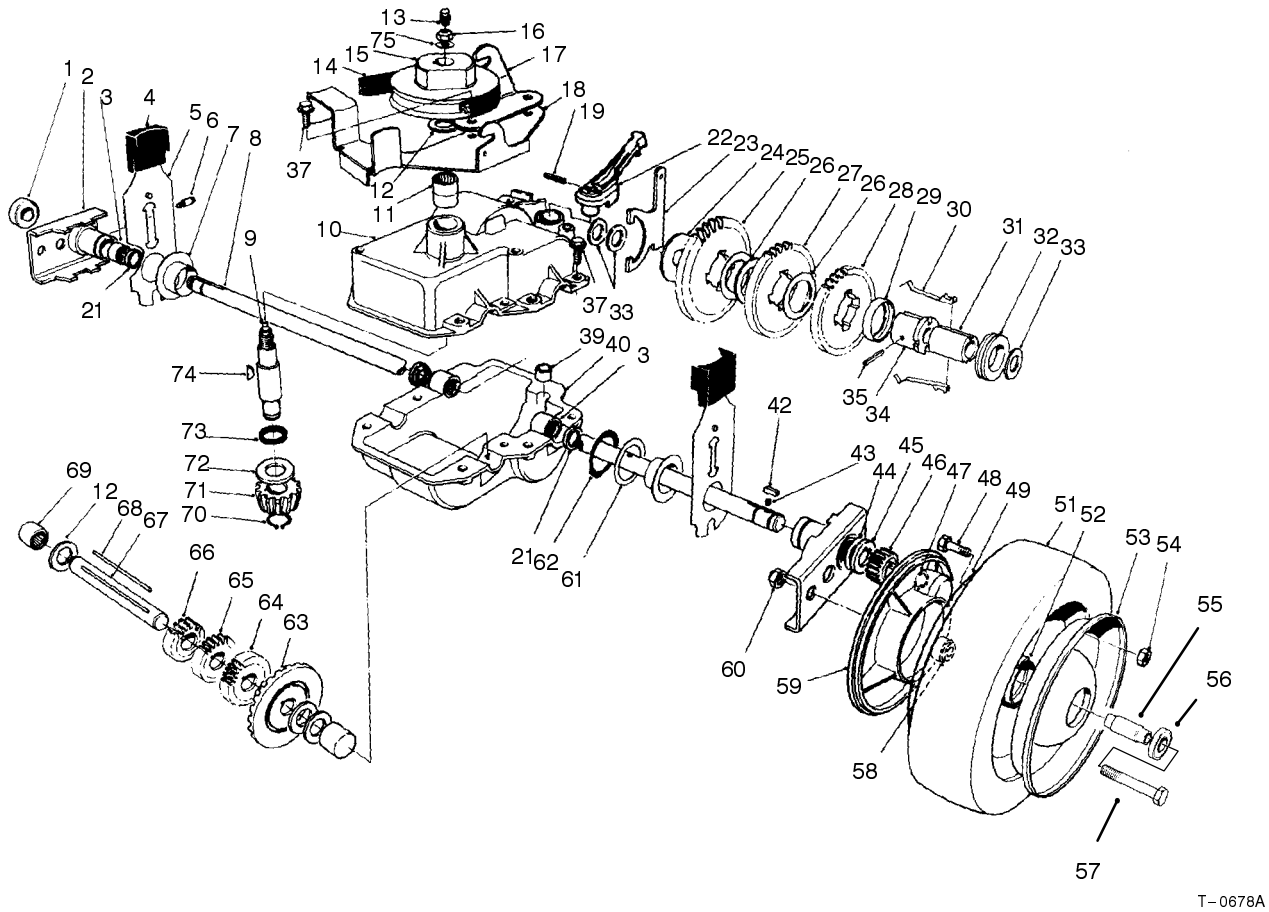

GEAR CASE ASSEMBLY

Ref. No.	Part No.	Description	No. Used
1	52–2450	Bearing	2
2	74–1851	Pivot Arm Assembly (Incl. Ref. #1, 3, 6 & 21)	2
3	48–2060	Bearing – Needle	4
4	25–7740	Knob – Arm	2
5	66–7561	Spring Arm Assy. – Rear	2
6	92–6316	Fitting – Grease	2
7	48–2170	Cap – End	2
8	74–1890	Shaft – Output	1
9	13–5149	Shaft – Input (Incl Ref. #13)	1
10	13–9739	Upper Case Assembly (Incl. Ref. #11 & 73)	1
11	47–7270	Bearing – Needle	2
12	36–4792	Washer – Thrust	4
13	302–63	Fitting – Grease	1
14	36–8070	V–Belt	1
15	39–6740	Pulley	1
16	3296–5	Nut – Lock	1
17	74–1750	Bracket – Traction, Engage	1
18	49–8461	Bracket – Guide, Belt	1
19	32121–99	Pin – Roll	1
21	47–6730	Seal	4

Ref. No.	Part No.	Description	No. Used
22	74–1960	Lever – Shift	1
23	60–8870	Yoke – Shift	1
24	29–9690	Washer – Flat	1
25	46–3560	Gear – 52T	1
26	36–4770	Spacer – Gear	3
27	29–9271	Gear – 42T	1
28	42–4740	Gear – 38T	1
29	55–8020	Retainer – Key	1
30	29–9330	Key – Shift	2
31	39–6720	Sleeve	1
32	29–9340	Collar – Shift	1
33	36–4780	Washer – Flat	3
34	55–8010	Sleeve – Gear	1
35	3285–19	Pin – Groove	1
37	49–2040	Screw – Self Tapping	6
39	29–9570	Bushing – Yoke	1
40	74–1920	Case – Lower	1
42	612066	Key	2
43	39–9650	Spring	2
44	49–7700	Washer – Thrust, Keyed	2
45	62–3830	Washer – Thrust, Keyed	2
46	39–9160	Pinion	2
47	32151–68	Ring – Klip	4

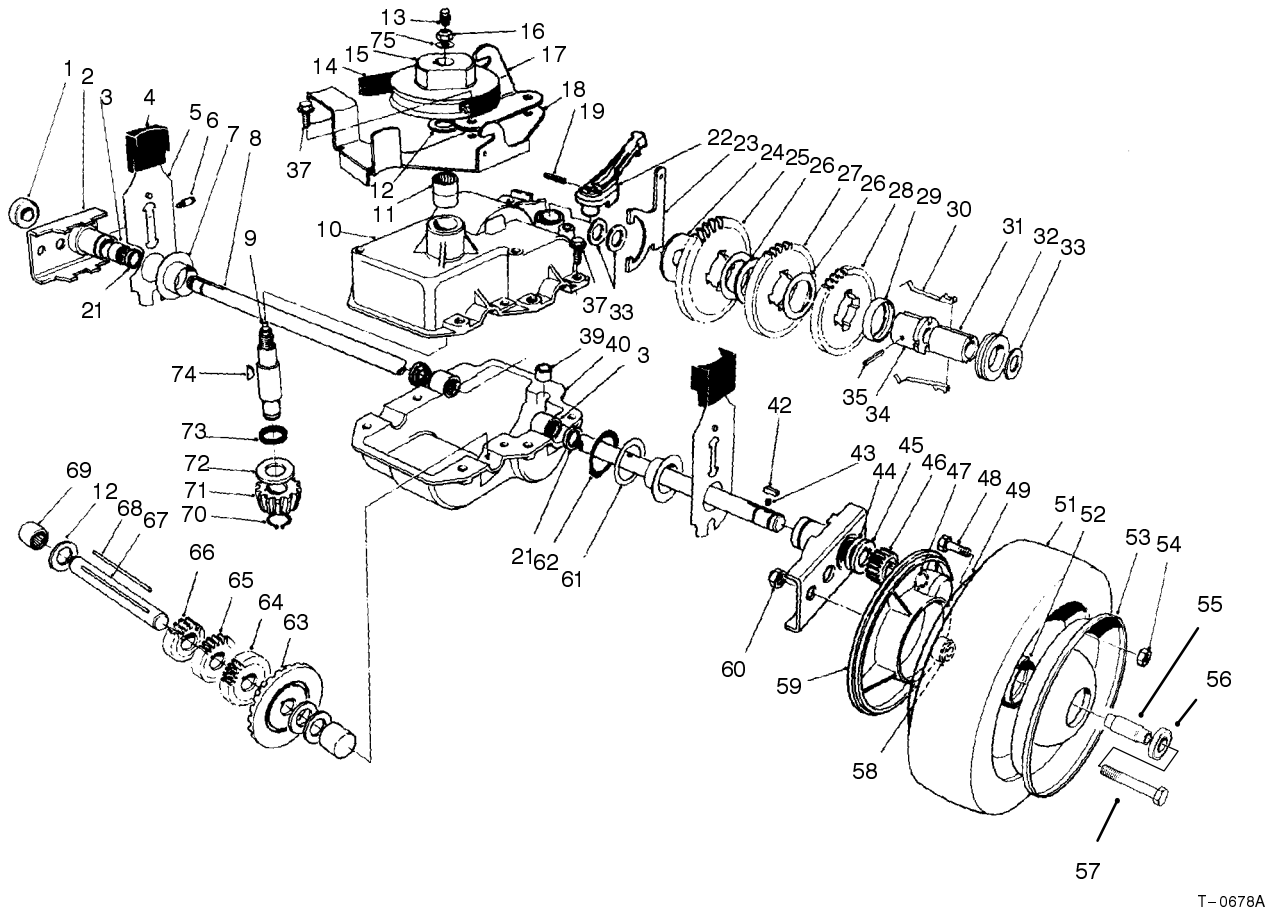

GEAR CASE ASSEMBLY(Continued)

Ref. No.	Part No.	Description	No. Used
48	321–2	Screw – Cap, Hex. Hd.	8
49	92–4957	Wheel – Half & Gear	2
51	53–7740	Tire	2
52	52–2410	Hub	2
53	53–7780	Plate – Wheel Half	2
54	3296–42	Nut – Lock	8
55	52–2440	Spacer – Bearing	2
56	52–2450	Bearing – Wheel	4
57	323–13	Screw – Cap, Hex. Hd.	2
58	74–1650	Spacer – Wheel	2
59	74–1640	Cover – Wheel	2
60	32152–2	Nut – Lock	2
61	74–1810	Washer	2
62	32151–36	Ring – Retaining	2
63	74–1760	Gear – Bevel	1
64	39–6650	Gear – 18T	1

Ref. No.	Part No.	Description	No. Used
65	46–3550	Gear – 14T	1
66	46–3540	Gear – 12T	1
67	53–7950	Shaft – Intermediate	1
68	39–7842	Key – Square	1
69	252–103	Bearing – Closed	2
70	32151–57	Ring – Retaining	1
71	39–6660	Pinion – Bevel	1
72	47–2910	Washer – Thrust	1
73	47–7260	Seal	1
74	3257–1	Key – Woodruff	2
75	3256–45	Washer – Flat	1
*	74–1861	Gear Case Assembly (Incl. Ref. #3, 8–13, 15–16, 21, 23–40 & 63–74)	1
*	74–1720	Wheel & Tire Assembly (Incl. Ref. #48–49 & 51–56)	2

*Not Illustrated

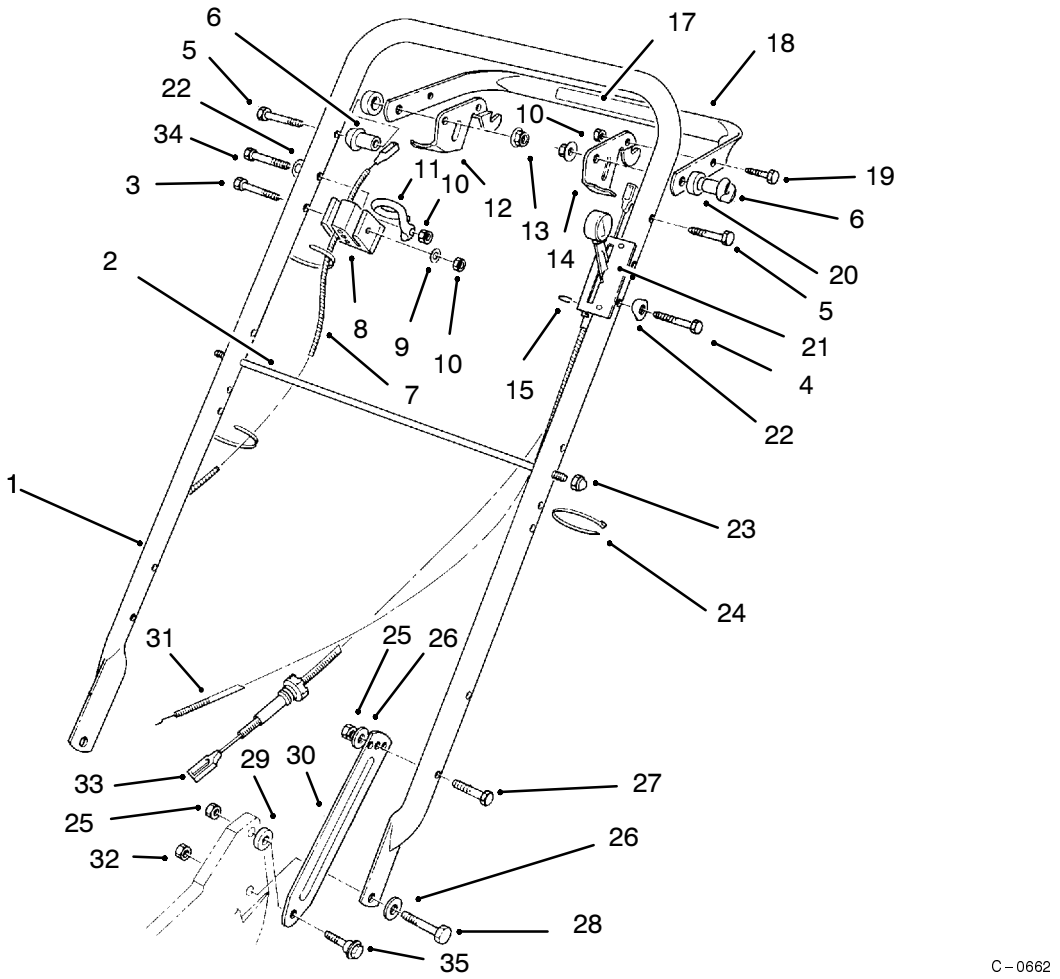

HANDLE ASSEMBLY

Ref. No.	Part No.	Description	No. Used
1	92–1586	Handle	1
2	48–2810	Rod – Bag Support	1
3	321–15	Screw – Hex Hd. Cap	1
4	321–13	Screw – Hex Hd. Cap	2
5	322–10	Screw – Hex Hd. Cap	2
6	49–1630	Support – Spacer	2
7	85–6903	Cable – Brake	1
8	46–6980	Support – Cable	1
9	3256–22	Washer – Flat	1
10	3296–42	Nut – Lock	4
11	46–8081	Guide – Rope	1
12	77–5270	Lever – Control	1
13	3296–58	Nut – Lock	2
14	66–5350	Lever – Control	1
15	32151–86	E–Ring	2
17	82–2380	Decal – Traction Control	1
18	61–8270	Bar – Control	1
19	321–4	Screw – Hex Hd. Cap	2

Ref. No.	Part No.	Description	No. Used
20	256–276	Spacer	2
21	82–9950	Bracket – Control Throttle	1
22	3–7501	Washer – Curved	4
23	32111–7	Nut – Acorn	2
24	3290–378	Tie – Cable	3
25	3296–29	Nut – Lock	4
26	3290–456	Washer – Flat	4
27	322–7	Screw – Hex Hd. Cap	2
28	322–6	Screw – Hex Hd. Cap	2
29	3–3287	Spacer	2
30	84–8361	Latch – Handle – L.H.	1
*	84–8401	Latch – Handle – R.H.	1
31	70–1061	Cable – Throttle	1
32	3296–47	Nut – Lock	2
33	74–1791	Cable – Traction	1
34	321–9	Screw – Hex Hd. Cap	1
35	27–7210	Screw – Shoulder	2

*Not Illustrated

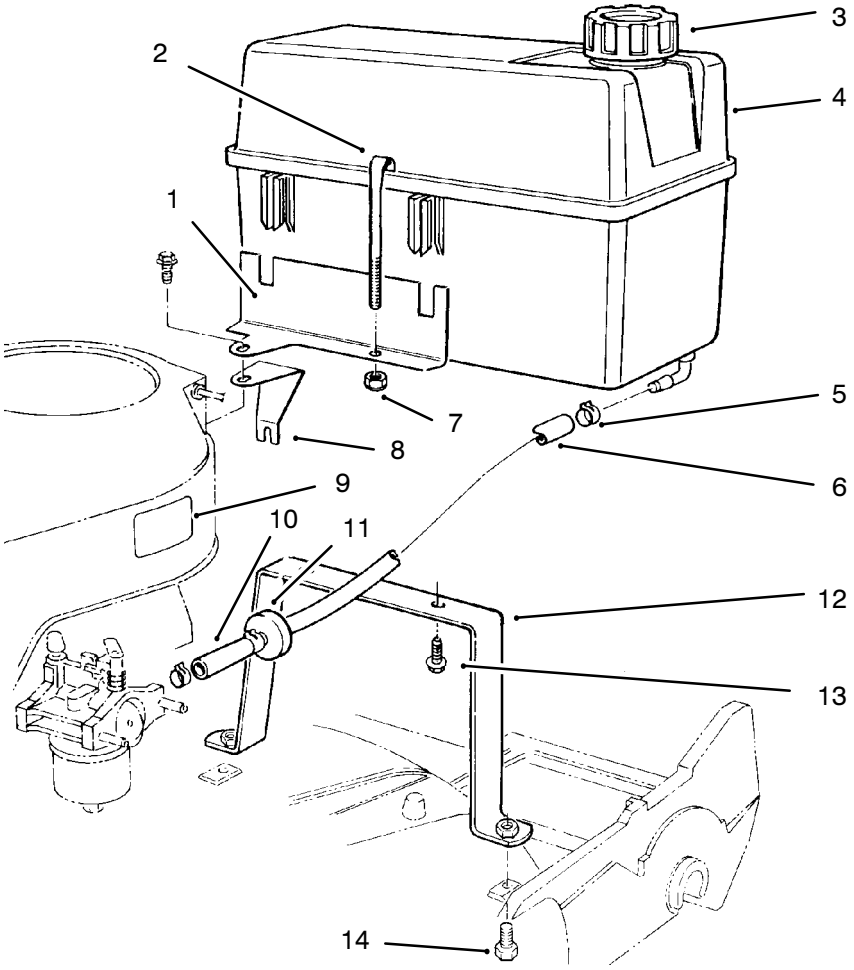

GAS TANK ASSEMBLY

Ref. No.	Part No.	Description	No. Used
1	74–2110	Bracket – Tank	1
2	77–2840	Retainer – Tank, Fuel	1
3	55–3575	Cap – Gas	1
4	82–8460	Tank – Gas	1
5	2412–95	Clamp – Fuel Line	4
6	51–3214	Hose – Fuel	1
7	3296–42	Nut – Lock	1

Ref. No.	Part No.	Description	No. Used
8	77–0520	Support – Bracket	1
9	62–7600	Decal – Fuel	1
10	51–3211	Hose – Fuel	1
11	71–9280	Filter – Fuel	1
12	84–9160	Mount – Tank, Bottom	1
13	46–8091	Screw – Hex. Washer Hd.	2
14	323–6	Screw – Cap, Hex. Hd.	2

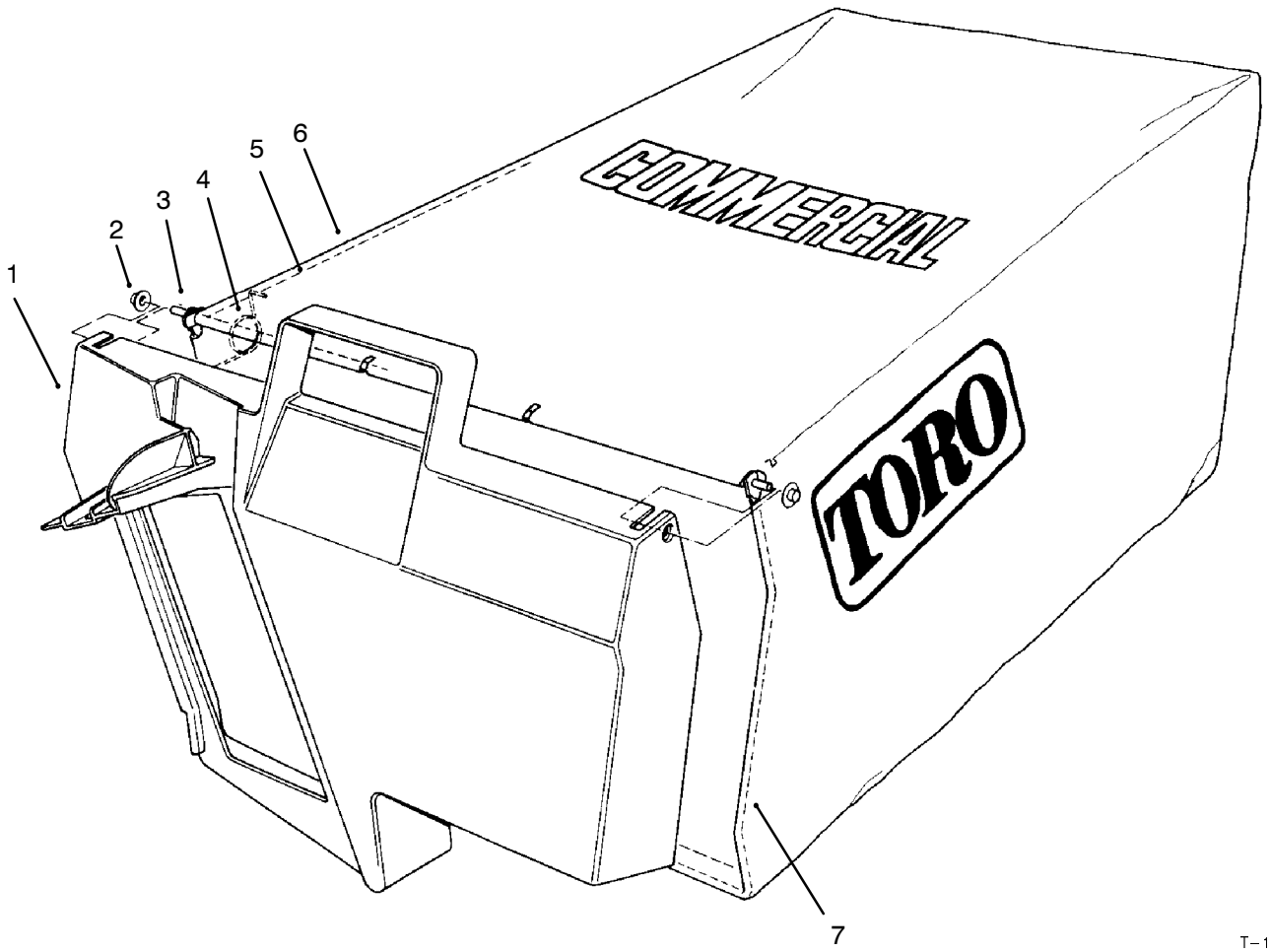

GRASS BAG ASSEMBLY No. 11–5609

Ref. No.	Part No.	Description	No. Used
1	48–2840	Door – Bag, Grass	1
2	3290–422	Nut – Push, Washer Cap	2
3	33–4820	Hinge – Door, Bag	1
4	36–6910	Spring	2

Ref. No.	Part No.	Description	No. Used
5	42–4030	Frame – Bag, Upper	1
6	8–2759	Bag – Grass	1
7	42–4020	Frame – Bag	1

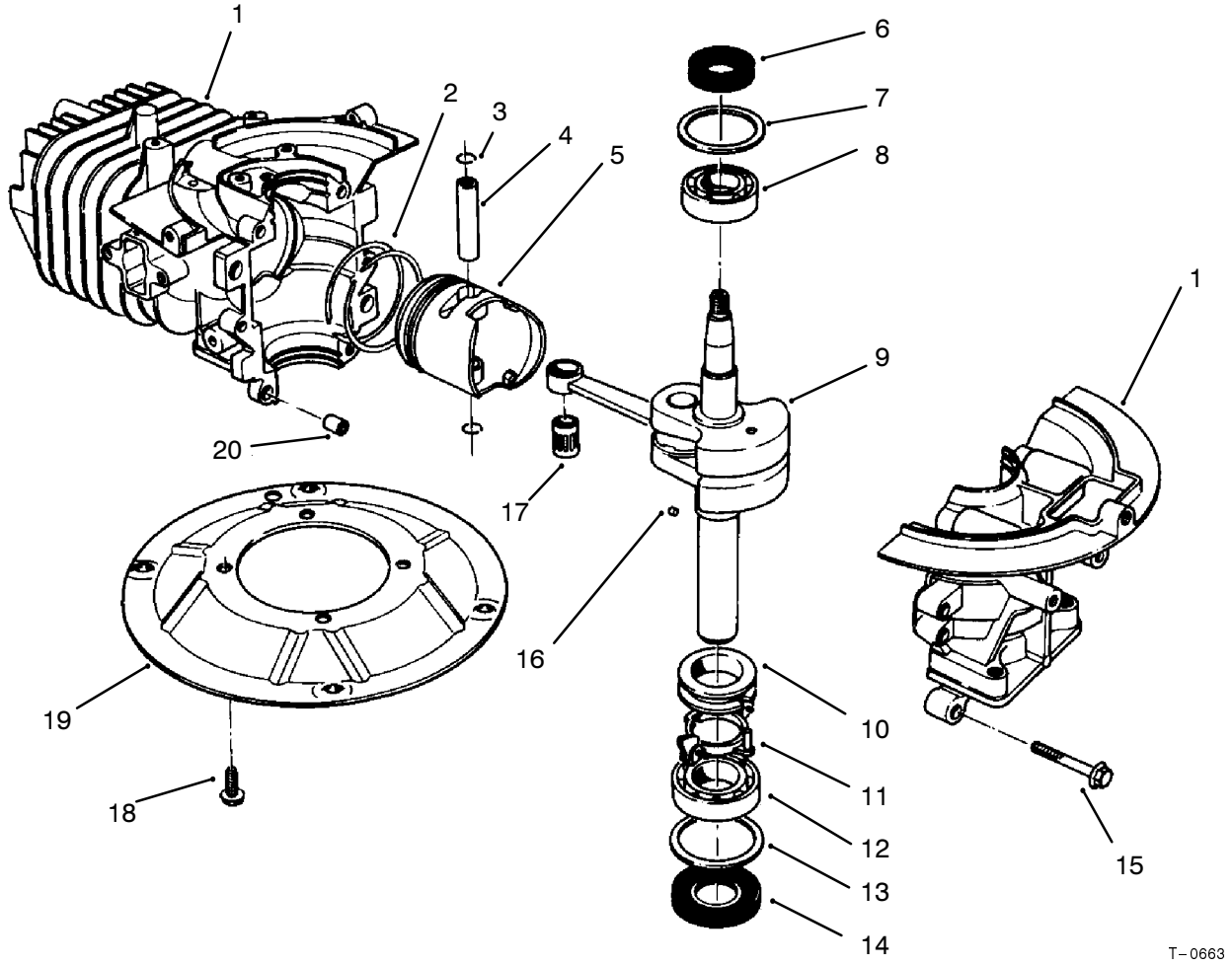

CRANKSHAFT ASSEMBLY (Model No. 47PR4–3)

Ref. No.	Part No.	Description	No. Used
1	81–2800	Crankcase/Cylinder Assy.	1
2	81–0590	Piston Ring Set	1
3	81–0620	Circlip	2
4	81–0600	Pin – Wrist	1
5	81–2140	Piston – 58mm	1
6	81–0720	Seal – Oil, Upper	1
7	81–0710	Washer – Thrust, Upper	1
8	81–0690	Bearing – Upper 20mm	1
9	81–4680	Crankshaft/Connecting Rod Assembly	1
10	81–0770	Spacer – Governor	1

Ref. No.	Part No.	Description	No. Used
11	81–0750	Bracket – Arm, Governor	1
12	81–0700	Bearing – Lower 25mm	1
13	81–0730	Washer – Thrust, Lower	1
14	81–0740	Seal – Oil, Lower	1
15	81–0540	Bolt 30mm Lg.	5
16	81–0760	Pin – Crankshaft	1
17	81–0610	Bearing – Wrist Pin	1
18	81–0570	Bolt	4
19	81–0560	Plate – Mounting	1
20	81–0520	Pin – Crankcase	2
*	12–8099	Short Block	1

*Not Illustrated

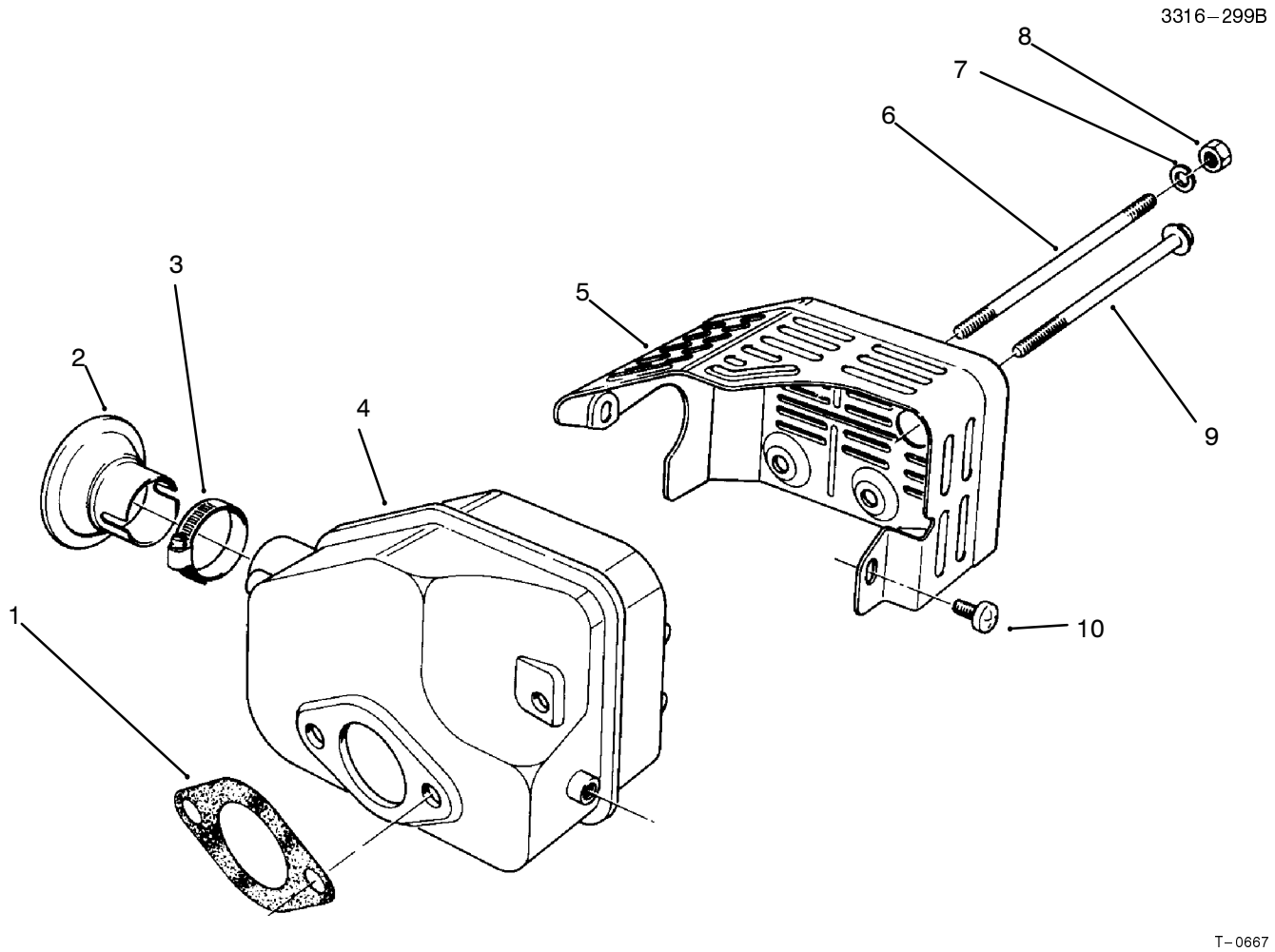

MUFFLER ASSEMBLY
(Model No. 47PR4–3)

Ref. No.	Part No.	Description	No. Used
1	81–1080	Gasket – Muffler	1
2	81–0200	Spark Arrester (Optional)	1
†3		Clamp	1
4	81–5690	Muffler	1
5	81–2450	Cover – Muffler	1

Ref. No.	Part No.	Description	No. Used
6	81–1100	Bolt	2
7	81–1120	Washer – Lock	2
8	81–1110	Nut	2
9	81–1150	Bolt – Self Tapping	1
10	81–1140	Screw – Phillips Hd.	2

†Obtain Locally

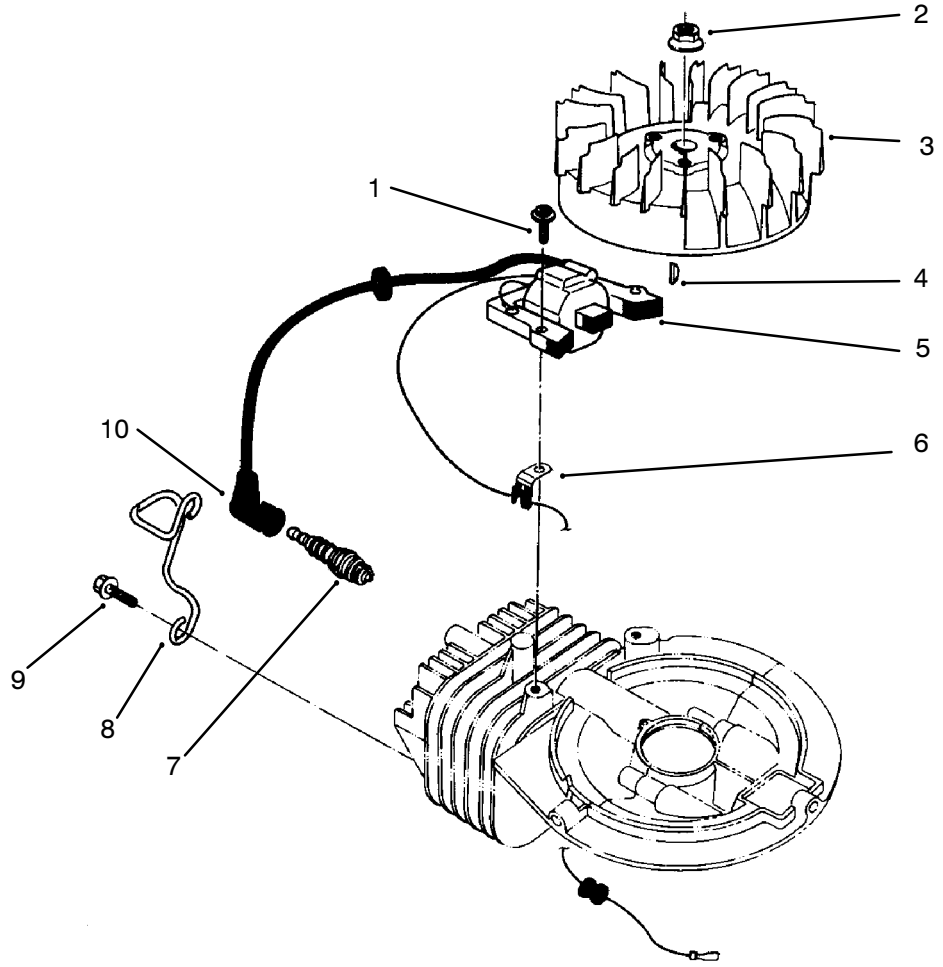

T–0664

IGNITION ASSEMBLY (Model No. 47PR4–3)

Ref. No.	Part No.	Description	No. Used
1	81–5680	Screw – Cap, Hex Hd.	2
2	81–1330	Nut	1
3	81–2810	Flywheel – Magneto	1
4	81–2370	Key – Flywheel	1
5	81–2820	Coil/Ignition Assembly	1
6	81–1480	Clamp	1

Ref. No.	Part No.	Description	No. Used
7	81–0181	Spark Plug	1
8	81–2120	Guard – Spark Plug	1
9	81–2350	Bolt – Self Tapping (20mm Lg.)	2
10	81–1500	Cap Assembly – Spark Plug	1
*	41–7650	Puller – Flywheel	1

*Not Illustrated

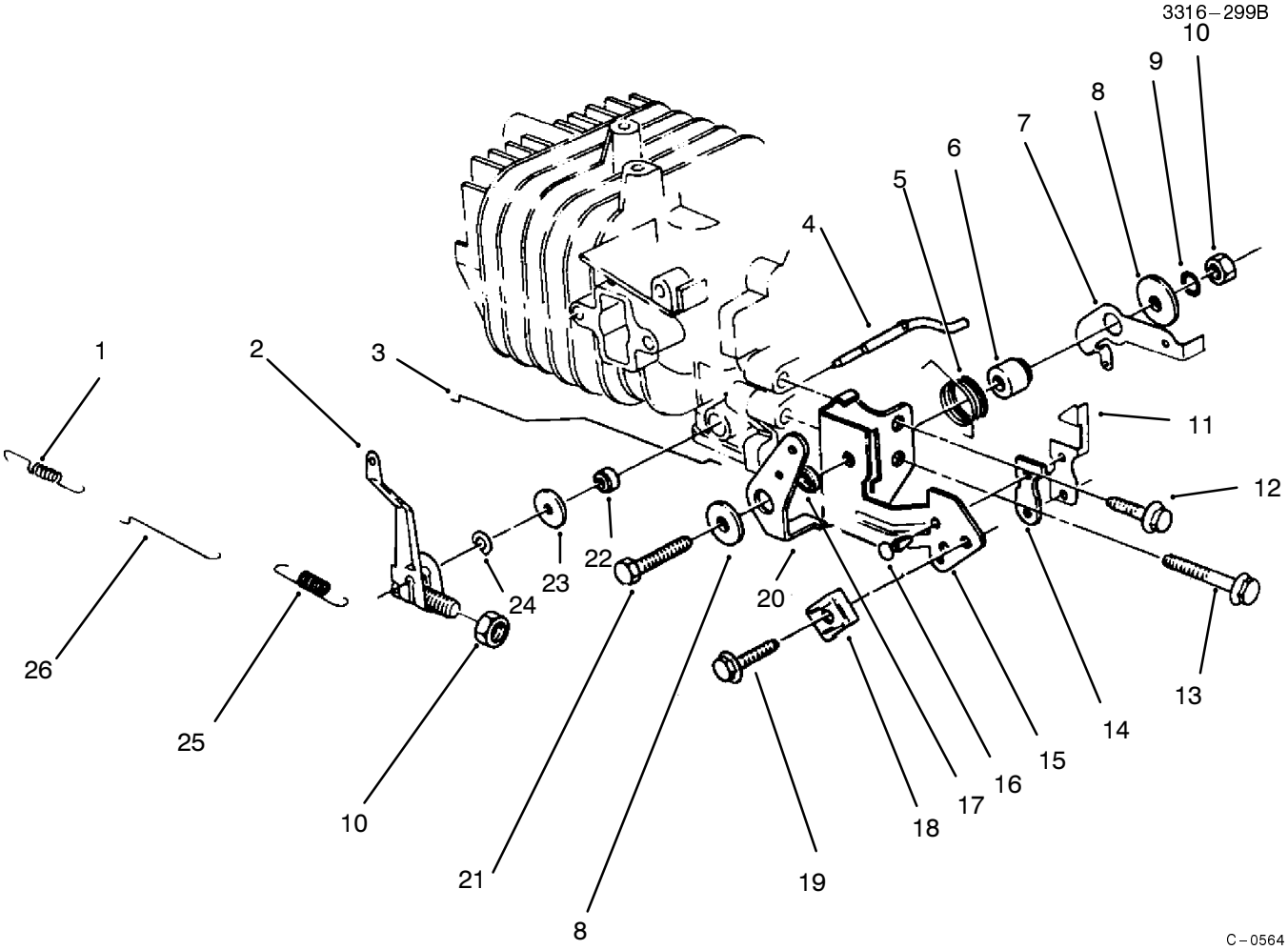

GOVERNOR ASSEMBLY
(Model No. 47PR4–3)

Ref. No.	Part No.	Description	No. Used
1	81–0920	Spring – Carburetor Rod	1
2	81–5420	Governor Arm/Bolt Assy.	1
3	81–5410	Rod – Choke	1
4	81–2880	Shaft – Governor	1
5	81–2460	Spring – Lever, Choke	1
6	81–1770	Spacer – Lever, Governor	1
7	81–2850	Lever – Governor	1
8	81–1750	Washer – Lever, Choke	2
9	81–1450	Washer – Lock	1
10	81–0900	Nut	2
11	81–1840	Terminal – Kill Switch	1
12	81–1170	Bolt – Self Tapping	1
13	81–0540	Bolt	1

Ref. No.	Part No.	Description	No. Used
14	81–1830	Insulator – Kill Switch	1
15	81–2420	Bracket – Throttle	1
16	81–4530	Rivet – Kill Switch	2
17	81–2470	Spacer – Lever, Choke	1
18	81–2430	Clamp – Cable	1
19	50–0130	Bolt – Clamp, Cable	1
20	81–1710	Lever – Choke	1
21	81–1730	Bolt – Bracket, Throttle	1
22	81–0850	Seal – Shaft, Governor	1
23	81–0860	Washer	1
24	81–0870	Ring – Retaining	1
25	81–2830	Spring – Governor	1
26	81–0910	Rod – Carburetor	1

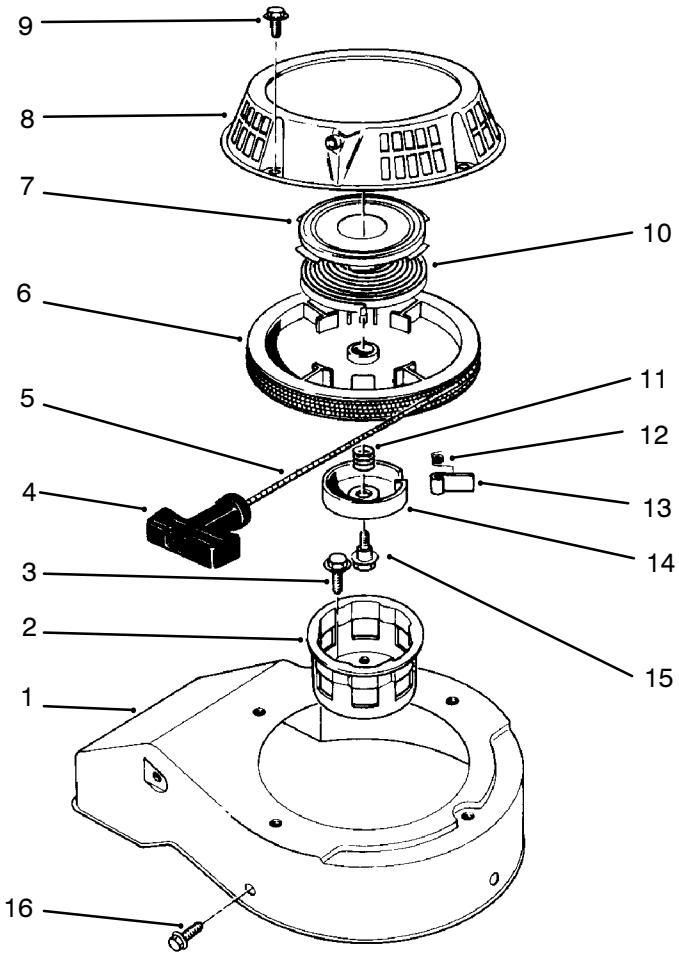

T–1102

RECOIL ASSEMBLY
(Model No. 47PR4–3)

Ref. No.	Part No.	Description	No. Used
1	81–2080	Cover – Fan, Cooling	1
2	81–2170	Cup – Pulley, Starter	1
3	81–1300	Bolt	3
4	81–1630	Handle – Recoil	1
5	81–1270	Rope	1
6	81–1210	Pulley – Rope	1
7		Retainer – Spring, Recoil	1
8	81–2100	Case – Starter	1
9	81–1280	Bolt	4
10		Spring – Recoil	1
11	81–1240	Spring – Compression	1

Ref. No.	Part No.	Description	No. Used
12	81–1220	Spring – Dog	1
13	81–1230	Dog – Starter	1
14	81–1250	Retainer – Dog	1
15	81–1260	Bolt – Shoulder	1
16	53–1340	Bolt – Self Tapping (15mm Lg.)	3
*	81–5940	Starter Assembly (Incl. Ref. #4–15)	1
*	81–2300	Spring & Retainer Assembly (Incl. Ref. #7 & 10)	1

*Not Illustrated

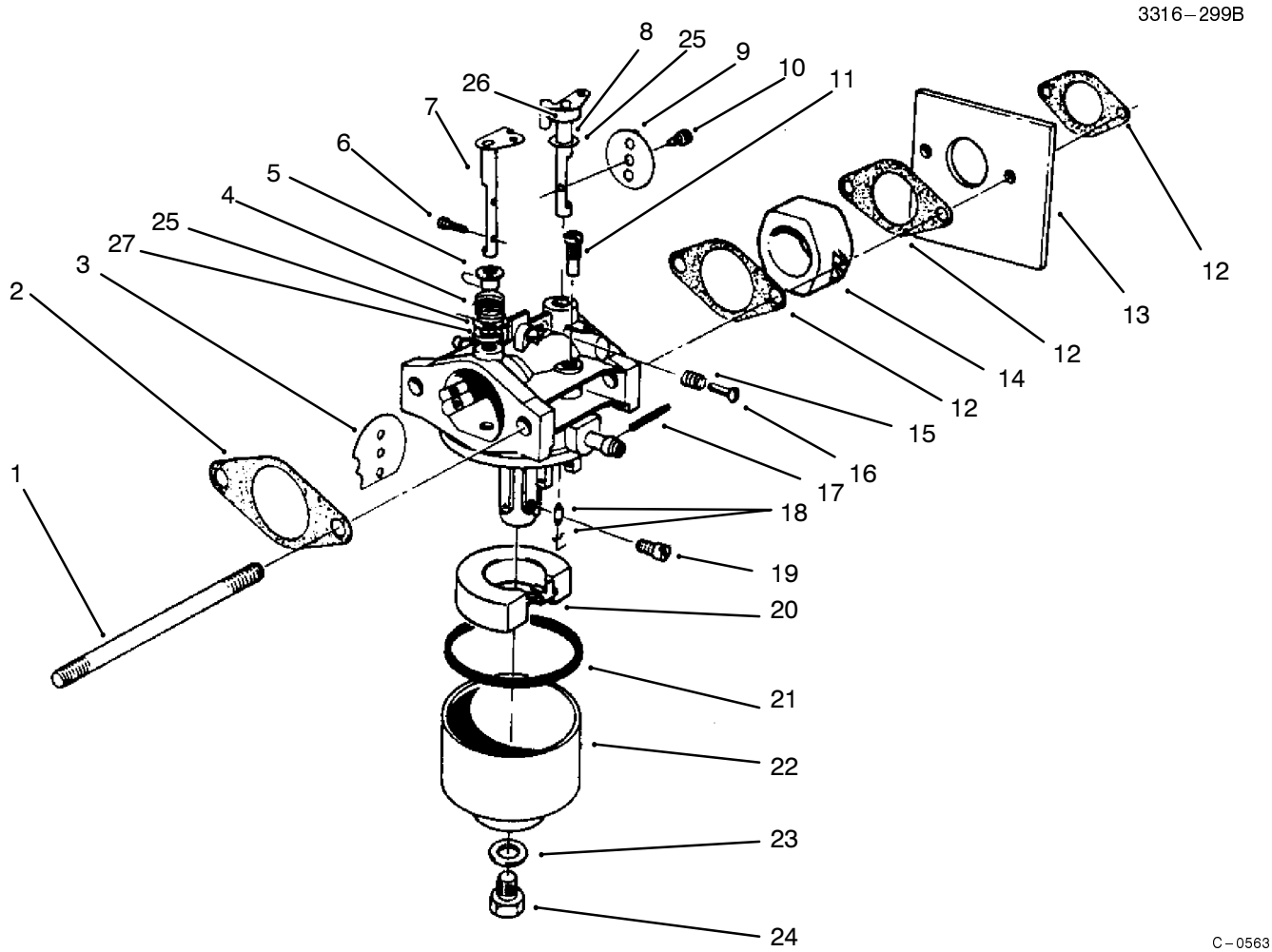

CARBURETOR ASSEMBLY
(Model No. 47PR4–3)

Ref. No.	Part No.	Description	No. Used
1	81–5450	Stud Bolt, Carburetor	2
2	81–0090	Gasket	1
3	81–0240	Valve – Choke	1
4	81–0230	Spring – Choke	1
5	81–0220	Bushing – Choke	1
6	81–2160	Screw – Choke Plate	2
7	81–1950	Shaft – Choke	1
8	81–0250	Shaft – Throttle	1
9	81–0260	Valve – Throttle	1
10	81–0270	Screw – Throttle	1
11	81–1030	Jet – Pilot #40	1
12	81–0780	Gasket – Carburetor	3
13	81–5490	Shield – Carburetor	1
14	81–2190	Insulator – Carburetor	1
15	81–2580	Spring – Idle Stop	1
16	50–0250	Screw – Idle Stop	1
17	81–2600	Pin – Float	1
18	81–4910	Needle Valve	1
19	81–1060	Jet – Main #75	1

Ref. No.	Part No.	Description	No. Used
*	81–2340	Jet – Main #72.5 High Alt. Above 6,000 Ft. (Optional)	A/R
20	81–0970	Float	1
21	81–1010	Gasket – Bowl, Float	1
22	81–5660	Bowl – Float	1
23	81–1020	Gasket – Capscrew, Bowl	1
24	81–5670	Capscrew – Bowl	1
25	81–2530	Seal	2
26	81–2540	Ring	1
27	81–2550	Packing	1
*	81–5430	Carburetor Ass'y w/Primer	1
*	81–2520	Carburetor Ass'y	1
*	12–6379	Carburetor Kit (Incl. Ref. #2, 12, 18, 21 & 23)	1
*	81–5810	Seat Kit (Incl. Valve Seat & Ref. #18)	1

*Not Illustrated

PRODUCT CHANGES

In an effort to make improvements available to TORO owners as quickly as possible, minor changes are incorporated into Toro's products from time to time that do not become immediately shown in the Parts Catalog. If such a change has been made in your unit, which is not reflected in your manual, see your TORO Distributor or his Authorized TORO Service Dealer for information and part numbers.

COUNTRIES OTHER THAN THE UNITED STATES OR CANADA

Customers who have purchased TORO products exported from the United States or Canada should contact their Toro Distributor (Dealer) to obtain guarantee policies for your country, province or state. If for any reason you are dissatisfied with your Distributor's service or have difficulty obtaining guarantee information, contact the TORO importer. If all other remedies fail, you may contact us at The Toro Company.

MAINTENANCE RECORD

Date								

Compliance with Radio Interference Regulations Certified.
Certifie Conforme au Reglement sur le Brouillage Radioelectrique.

Litho in U.S.A.

MAINTENANCE RECORD

Date								

TORO PART NUMBER INDEX

Part No.	Description	Pg. No.	Ref. No.	Qty.
612066	Key	5	42	2
3–3287	Spacer	7	29	2
3–7501	Washer – Curved	7	22	4
8–2759	Bag – Grass	9	6	1
12–6379	Carburetor Kit	15	*	1
12–8099	Short Block	10	*	1
13–5149	Shaft – Input	5	9	1
13–9739	Upper Case Assembly	5	10	1
14–6009	Mounting Plate Assembly	4	*	1
14–9419	Blade	3	20	1
14–9499	Housing – Commercial	1	4	1
25–7740	Knob – Arm	5	4	2
25–7740	Knob – Arm	2	37	2
26–0670	Screw – Blade	3	22	1
27–6232	Screw – Pivot	2	39	2
27–6300	Key – Square	3	16	1
27–7210	Screw – Shoulder	7	35	2
29–9271	Gear – 42T	5	27	1
29–9330	Key – Shift	5	30	2
29–9340	Collar – Shift	5	32	1
29–9570	Bushing – Yoke	5	39	1
29–9690	Washer – Flat	5	24	1
33–3208	Rod – Shield	1	34	1
33–4820	Hinge – Door, Bag	9	3	1
36–4770	Spacer – Gear	5	26	3
36–4780	Washer – Flat	5	33	3
36–4792	Washer – Thrust	5	12	4
36–6910	Spring	9	4	2
36–8070	V–Belt	5	14	1
37–7260	Screw – Special	1	26	2
39–5770	Decal – Danger	1	7	1
39–6650	Gear – 18T	6	64	1
39–6660	Pinion – Bevel	6	71	1
39–6720	Sleeve	5	31	1
39–6740	Pulley	5	15	1
39–7842	Key – Square	6	68	1
39–9160	Pinion	5	46	2
39–9650	Spring	5	43	2
40–1940	Washer – Hardened	2	50	4
41–7650	Puller – Flywheel	12	*	1
42–4020	Frame – Bag	9	7	1
42–4030	Frame – Bag, Upper	9	5	1
42–4740	Gear – 38T	5	28	1
44–0580	Shield – Rear Safety	2	35	1
44–2750	Body – Primer	3	13	1
44–3172	Hose – Primer	3	5	1
46–3540	Gear – 12T	6	66	1
46–3550	Gear – 14T	6	65	1
46–3560	Gear – 52T	5	25	1
46–6810	Screw – Thread Forming	1	8	1
46–6811	Screw – Thread Forming	1	12	1
46–6980	Support – Cable	7	8	1
46–7030	Retainer – Cable	1	29	1
46–7910	Pulley – Driver	3	15	1
46–8081	Guide – Rope	7	11	1
46–8090	Screw – Self Tapping	1	17	2
46–8091	Screw – Hex. Washer Hd.	8	13	2
47–2480	Stop – Recoil	3	28	1
47–2910	Washer – Thrust	6	72	1
47–6730	Seal	5	21	4
47–7260	Seal	6	73	1
47–7270	Bearing – Needle	5	11	2
48–2060	Bearing – Needle	5	3	4
48–2170	Cap – End	5	7	2
48–2810	Rod – Bag Support	7	2	1
48–2840	Door – Bag, Grass	9	1	1
49–1630	Support – Spacer	7	6	2
49–2040	Screw – Self Tapping	5	37	6
49–2040	Screw – Thread Forming	1	3	8
49–7700	Washer – Thrust, Keyed	5	44	2
49–8461	Bracket – Guide, Belt	5	18	1
49–8740	Quadrant – Rear L.H.	1	33	1
49–8750	Quadrant – Rear R.H.	1	*	1
49–8760	Quadrant – Front L.H.	2	52	1
49–8770	Quadrant – Front R.H.	1	2	1
50–0130	Bolt – Clamp, Cable	13	19	1
50–0250	Screw – Idle Stop	15	16	1
50–7180	Nut – Lock	3	10	2
51–2690	Screw – Hex. Flange Hd.	3	8	1
51–3211	Hose – Fuel	8	10	1
51–3214	Hose – Fuel	8	6	1
52–2170	Retainer – Blade	3	24	1
52–2190	Spacer – Retainer, Blade	3	17	1
52–2410	Hub	2	41	2
52–2410	Hub	6	52	2
52–2440	Spacer – Bearing	2	42	2
52–2440	Spacer – Bearing	6	55	2
52–2450	Bearing	5	1	2
52–2450	Bearing – Wheel	2	43	4
52–2450	Bearing – Wheel	6	56	4
52–2480	Spacer – Wheel	2	46	2
52–2620	Label – Grease	1	28	1
53–1340	Bolt – Self Tapping	14	16	3
53–4690	Stop – Ground Strap	4	10	1
53–7720	Wheel & Tire Assembly	2	*	2
53–7740	Tire	2	40	2
53–7740	Tire	6	51	2
53–7780	Plate – Wheel Half	2	44	4
53–7780	Plate – Wheel Half	6	53	2
53–7950	Shaft – Intermediate	6	67	1
55–3575	Cap – Gas	8	3	1
55–8010	Sleeve – Gear	5	34	1
55–8020	Retainer – Key	5	29	1
60–8870	Yoke – Shift	5	23	1
60–9010	Strap – Ground	4	7	1
61–8062	Engine – Complete	3	2	1
61–8270	Bar – Control	7	18	1
61–8300	Pivot Arm Assembly	1	1	2
62–3830	Washer – Thrust, Keyed	5	45	2
62–3980	Sleeve	3	9	2
62–7600	Decal – Fuel	8	9	1
63–9330	Body – Air Cleaner	3	6	1
63–9340	Cover – Air Cleaner	3	12	1
63–9380	Filter – Foam	3	11	1
65–5860	Protector – Crankshaft	3	25	1
66–5350	Lever – Control	7	14	1
66–5370	Spring – Compression	4	9	1
66–5380	Brake Plate Assembly	4	5	1
66–7460	Bulb – Primer	3	14	1
66–7560	Spring Arm Ass'y – Front	2	38	2
66–7561	Spring Arm Assy. – Rear	5	5	2
66–9300	Screw – Hex. Flange Hd.	3	26	4
70–1061	Cable – Throttle	7	31	1
71–1260	Decal – Pro Line	3	1	1
71–1280	Decal – Safety Instructions	2	55	1
71–9280	Filter – Fuel	8	11	1
71–9350	Bracket – Spring	1	11	1
71–9370	Decal – Danger Covers	2	56	1

*Not Illustrated

TORO PART NUMBER INDEX (Cont.)

Part No.	Description	Pg. No.	Ref. No.	Qty.
74–1640	Cover – Wheel	6	59	2
74–1650	Spacer – Wheel	6	58	2
74–1720	Wheel & Tire Assembly	6	*	2
74–1741	Bracket – Traction Adj.	1	31	1
74–1750	Bracket – Traction, Engage	5	17	1
74–1760	Gear – Bevel	6	63	1
74–1770	Cover – Belt	1	27	1
74–1791	Cable – Traction	7	33	1
74–1810	Washer	6	61	2
74–1851	Pivot Arm Assembly	5	2	2
74–1861	Gear Case Assembly	6	*	1
74–1890	Shaft – Output	5	8	1
74–1920	Case – Lower	5	40	1
74–1960	Lever – Shift	5	22	1
74–1970	Decal – Traction Drive	1	30	1
74–2110	Bracket – Tank	8	1	1
76–4640	Latch – Plug	1	21	1
76–4650	Grip – Latch	1	22	1
76–4660	Spring	1	13	1
76–4570	Plate – Latch	1	16	1
77–0040	Decal – Recoil	3	3	1
77–0200	Door Assembly	1	15	1
77–0500	Plug – Discharge	1	20	1
77–0520	Support – Bracket	8	8	1
77–2840	Retainer – Tank, Fuel	8	2	1
77–5260	Strap – Insulation	4	4	1
77–5270	Lever – Control	7	12	1
80–3770	Retainer – Door	1	14	1
81–0090	Gasket	15	2	1
81–0090	Gasket	3	4	1
81–0181	Spark Plug	12	7	1
81–0200	Spark Arrester (Optional)	11	2	1
81–0220	Bushing – Choke	15	5	1
81–0230	Spring – Choke	15	4	1
81–0240	Valve – Choke	15	3	1
81–0250	Shaft – Throttle	15	8	1
81–0260	Valve – Throttle	15	9	1
81–0270	Screw – Throttle	15	10	1
81–0520	Pin – Crankcase	10	20	2
81–0540	Bolt	13	13	1
81–0540	Bolt 30mm Lg.	10	15	5
81–0560	Plate – Mounting	10	19	1
81–0570	Bolt	10	18	4
81–0590	Piston Ring Set	10	2	1
81–0600	Pin – Wrist	10	4	1
81–0610	Bearing – Wrist Pin	10	17	1
81–0620	Circlip	10	3	2
81–0690	Bearing – Upper 20mm	10	8	1
81–0700	Bearing – Lower 25mm	10	12	1
81–0710	Washer – Thrust, Upper	10	7	1
81–0720	Seal – Oil, Upper	10	6	1
81–0730	Washer – Thrust, Lower	10	13	1
81–0740	Seal – Oil, Lower	10	14	1
81–0750	Bracket – Arm, Governor	10	11	1
81–0760	Pin – Crankshaft	10	16	1
81–0770	Spacer – Governor	10	10	1
81–0780	Gasket – Carburetor	15	12	3
81–0850	Seal – Shaft, Governor	13	22	1
81–0860	Washer	13	23	1
81–0870	Ring – Retaining	13	24	1
81–0900	Nut	13	10	2
81–0910	Rod – Carburetor	13	26	1
81–0920	Spring – Carburetor Rod	13	1	1
81–0970	Float	15	20	1
81–1010	Gasket – Bowl, Float	15	21	1
81–1020	Gasket – Capscrew, Bowl	15	23	1
81–1030	Jet – Pilot #40	15	11	1
81–1060	Jet – Main #75	15	19	1
81–1080	Gasket – Muffler	11	1	1
81–1100	Bolt	11	6	2
81–1110	Nut	11	8	2
81–1120	Washer – Lock	11	7	2
81–1140	Screw – Phillips Hd.	11	10	2
81–1150	Bolt – Self Tapping	11	9	1
81–1170	Bolt – Self Tapping	13	12	1
81–1210	Pulley – Rope	14	6	1
81–1220	Spring – Dog	14	12	1
81–1230	Dog – Starter	14	13	1
81–1240	Spring – Compression	14	11	1
81–1250	Retainer – Dog	14	14	1
81–1260	Bolt – Shoulder	14	15	1
81–1270	Rope	14	5	1
81–1280	Bolt	14	9	4
81–1300	Bolt	14	3	3
81–1330	Nut	12	2	1
81–1450	Washer – Lock	13	9	1
81–1480	Clamp	12	6	1
81–1500	Cap Assembly – Spark Plug	12	10	1
81–1630	Handle – Recoil	14	4	1
81–1710	Lever – Choke	13	20	1
81–1730	Bolt – Bracket, Throttle	13	21	1
81–1750	Washer – Lever, Choke	13	8	2
81–1770	Spacer – Lever, Governor	13	6	1
81–1830	Insulator – Kill Switch	13	14	1
81–1840	Terminal – Kill Switch	13	11	1
81–1950	Shaft – Choke	15	7	1
81–2080	Cover – Fan, Cooling	14	1	1
81–2100	Case – Starter	14	8	1
81–2120	Guard – Spark Plug	12	8	1
81–2140	Piston – 58mm	10	5	1
81–2160	Screw – Choke Plate	15	6	2
81–2170	Cup – Pulley, Starter	14	2	1
81–2190	Insulator – Carburetor	15	14	1
81–2300	Spring & Retainer Assembly	14	*	1
81–2340	Jet – Main #72.5 High Alt.	15	*	A/R
81–2350	Bolt – Self Tapping	12	9	2
81–2370	Key – Flywheel	12	4	1
81–2420	Bracket – Throttle	13	15	1
81–2430	Clamp – Cable	13	18	1
81–2450	Cover – Muffler	11	5	1
81–2460	Spring – Lever, Choke	13	5	1
81–2470	Spacer – Lever, Choke	13	17	1
81–2520	Carburetor Ass'y	15	*	1
81–2530	Seal	15	25	2
81–2540	Ring	15	26	1
81–2550	Packing	15	27	1
81–2580	Spring – Idle Stop	15	15	1
81–2600	Pin – Float	15	17	1
81–2800	Crankcase/Cylinder Assy.	10	1	1
81–2810	Flywheel – Magneto	12	3	1
81–2820	Coil/Ignition Assembly	12	5	1
81–2830	Spring – Governor	13	25	1
81–2850	Lever – Governor	13	7	1
81–2880	Shaft – Governor	13	4	1
81–4530	Rivet – Kill Switch	13	16	2
81–4680	Crankshaft/Connecting Rod	10	9	1
81–4910	Needle Valve	15	18	1
81–5410	Rod – Choke	13	3	1

*Not Illustrated

TORO PART NUMBER INDEX (Cont.)

Part No.	Description	Pg. No.	Ref. No.	Qty.
81–5420	Governor Arm/Bolt Assy.	13	2	1
81–5430	Carburetor Ass'y w/Primer	15	*	1
81–5450	Stud Bolt, Carburetor	15	1	2
81–5490	Shield – Carburetor	15	13	1
81–5660	Bowl – Float	15	22	1
81–5670	Capscrew – Bowl	15	24	1
81–5680	Screw – Cap, Hex Hd.	12	1	2
81–5690	Muffler	11	4	1
81–5810	Seat Kit	15	*	1
81–5940	Starter Assembly	14	*	1
82–2380	Decal – Traction Control	7	17	1
82–8460	Tank – Gas	8	4	1
82–9150	Chute – Discharge	1	9	1
82–9950	Bracket – Control Throttle	7	21	1
84–7820	Plate – Mounting	4	2	1
84–8361	Latch – Handle – L.H.	7	30	1
84–8401	Latch – Handle – R.H.	7	*	1
84–9160	Mount – Tank, Bottom	8	12	1
85–6903	Cable – Brake	7	7	1
85–6903	Cable – Brake	4	8	1
92–1586	Handle	7	1	1
92–1599	Stiffener – Blade	3	21	1
92–1720	Kicker	2	54	1
92–1730	Kicker	1	6	1
92–1750	Kicker	1	23	1
92–1796	Decal – Recycler	2	53	1
92–4957	Wheel – Half & Gear	6	49	2
92–6316	Fitting – Grease	5	6	2
92–9698	Screw – Shoulder, Metric	4	6	1
2412–95	Clamp – Fuel Line	8	5	4
252–103	Bearing – Closed	6	69	2
256–276	Spacer	7	20	2
257–3	Washer – Pivot	2	48	2
302–63	Fitting – Grease	5	13	1
321–2	Screw – Hex Hd. Cap	2	47	8
321–2	Screw – Hex Hd. Cap	6	48	8
321–4	Screw – Hex Hd. Cap	7	19	2
321–7	Screw – Hex Hd. Cap	1	18	2
321–9	Screw – Hex Hd. Cap	7	34	1
321–13	Screw – Hex Hd. Cap	7	4	2
321–15	Screw – Hex Hd. Cap	7	3	1
322–6	Screw – Hex Hd. Cap	7	28	2
322–7	Screw – Hex Hd. Cap	7	27	2
322–10	Screw – Hex Hd. Cap	7	5	2

Part No.	Description	Pg. No.	Ref. No.	Qty.
323–12	Screw – Hex Hd. Cap	2	45	2
323–6	Screw – Cap, Hex. Hd.	8	14	2
323–13	Screw – Cap, Hex. Hd.	6	57	2
3253–22	Washer – Lock	3	23	1
3254–6	Washer – Internal Tooth	3	18	3
3256–16	Washer	3	7	1
3256–22	Washer – Flat	7	9	1
3256–22	Washer – Flat	1	10	2
3256–45	Washer – Flat	6	75	1
3257–1	Key – Woodruff	6	74	2
3285–19	Pin – Groove	5	35	1
3290–378	Tie – Cable	1	24	1
3290–378	Tie – Cable	7	24	3
3290–422	Nut – Push, Washer Cap	9	2	2
3290–456	Washer – Flat	7	26	4
3290–459	Rivet	4	3	2
3295–35	Rivet	1	25	1
3296–5	Nut – Lock	5	16	1
3296–6	Nut – Lock	2	51	2
3296–29	Nut – Lock	7	25	4
3296–42	Nut – Lock	8	7	1
3296–42	Nut – Lock	7	10	4
3296–42	Nut – Lock	1	19	10
3296–42	Nut – Lock	6	54	8
3296–47	Nut – Lock	7	32	2
3296–58	Nut – Lock	7	13	2
32111–7	Nut – Acorn	7	23	2
32121–99	Pin – Roll	5	19	1
32144–10	Screw – Self Tapping	4	1	1
32144–70	Screw – Thread Forming	3	19	3
32144–70	Screw – Thread Forming	1	32	1
32144–111	Screw – Pan Hd.	1	5	6
32144–112	Screw – Self Tapping	4	11	1
32151–36	Ring – Retaining	6	62	2
32151–57	Ring – Retaining	6	70	1
32151–68	Ring – Klip	5	47	4
32151–86	E–Ring	7	15	2
32152–2	Nut – Lock	2	49	2
32152–2	Nut – Lock	6	60	2

OPTIONAL EQUIPMENT

Side Discharge Chute . . . . . Model No. 59168

Spark Arrestor Muffler . . . . . Part No. 81–0200

*Not Illustrated