FORM NO. 3316–332

TORO®

MODEL NO. 38072–4900001 & UP
MODEL NO. 38073–4900001 & UP

PARTS CATALOG

724 SNOWTHROWER

REMOVED
Publications

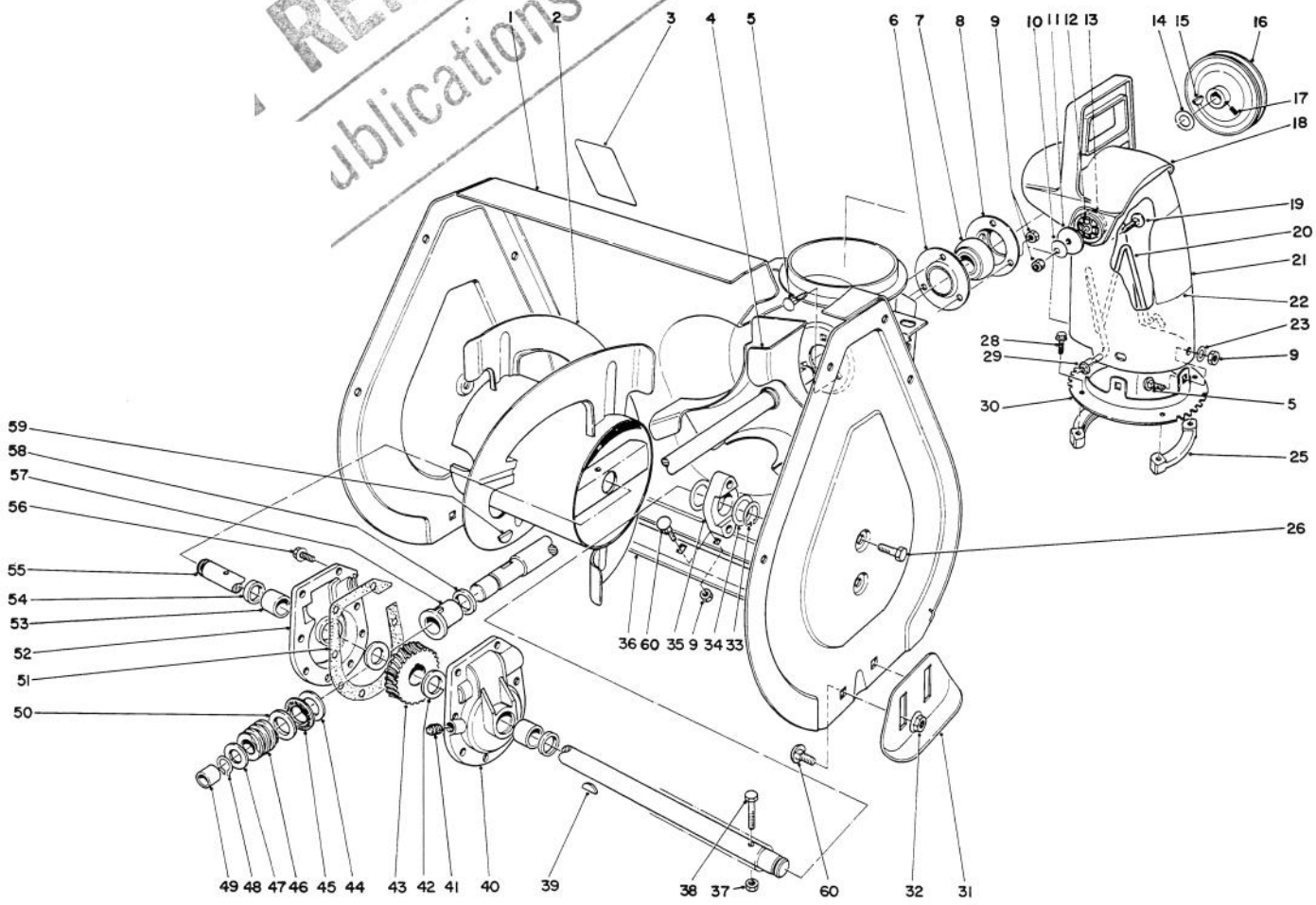

C–0031

AUGER ASSEMBLY

Ref. No.	Part No.	Description	No. Used
1	14–8119	Housing–Auger (Incl. ref. #3)	1
2	74–1600	Auger – R.H.	1
*	74–1590	Auger – L.H.	1
3	53–7670	Decal – Auger Warning	1
4	37–6990	Shaft & Impeller	1
5	3230–18	Bolt – Carriage	6
6		Flange – Bearing Front	1
7	63–3450	Bearing – Ball	1
8		Flange – Bearing Rear	1
9	3296–29	Nut – Lock	13
10	3290–340	Washer – Belleville	2
11	3256–68	Washer – Flat	2
12	55–8950	Plate – Friction	2
13	20–4320	Washer – Rubber	2
14	3–0737	Washer	1
15	3257–23	Key	1
16	37–6890	Pulley	1

Ref. No.	Part No.	Description	No. Used
17	3242–4	Screw – Set	2
18	56–2680	Deflector	1
19	3230–22	Bolt – Carriage	2
20	56–2670	Chute – Wire	1
21	13–7979	Chute – Discharge Model 38072 (Incl. Ref. #22)	1
*	12–8749	Chute – Discharge Model 38073 (Incl. Ref. #22)	1
22	63–3740	Decal – Discharge Model 38072	1
*	63–3760	Decal – Discharge Model 38073	1
23	3256–23	Washer	3
25	37–6490	Retainer – Chute Ring	3
26	32144–70	Screw – Self Tapping	4
28	27–0220	Screw – Self Tapping	6

*Not Illustrated

© The TORO Company –1993
All Rights Reserved

TPS

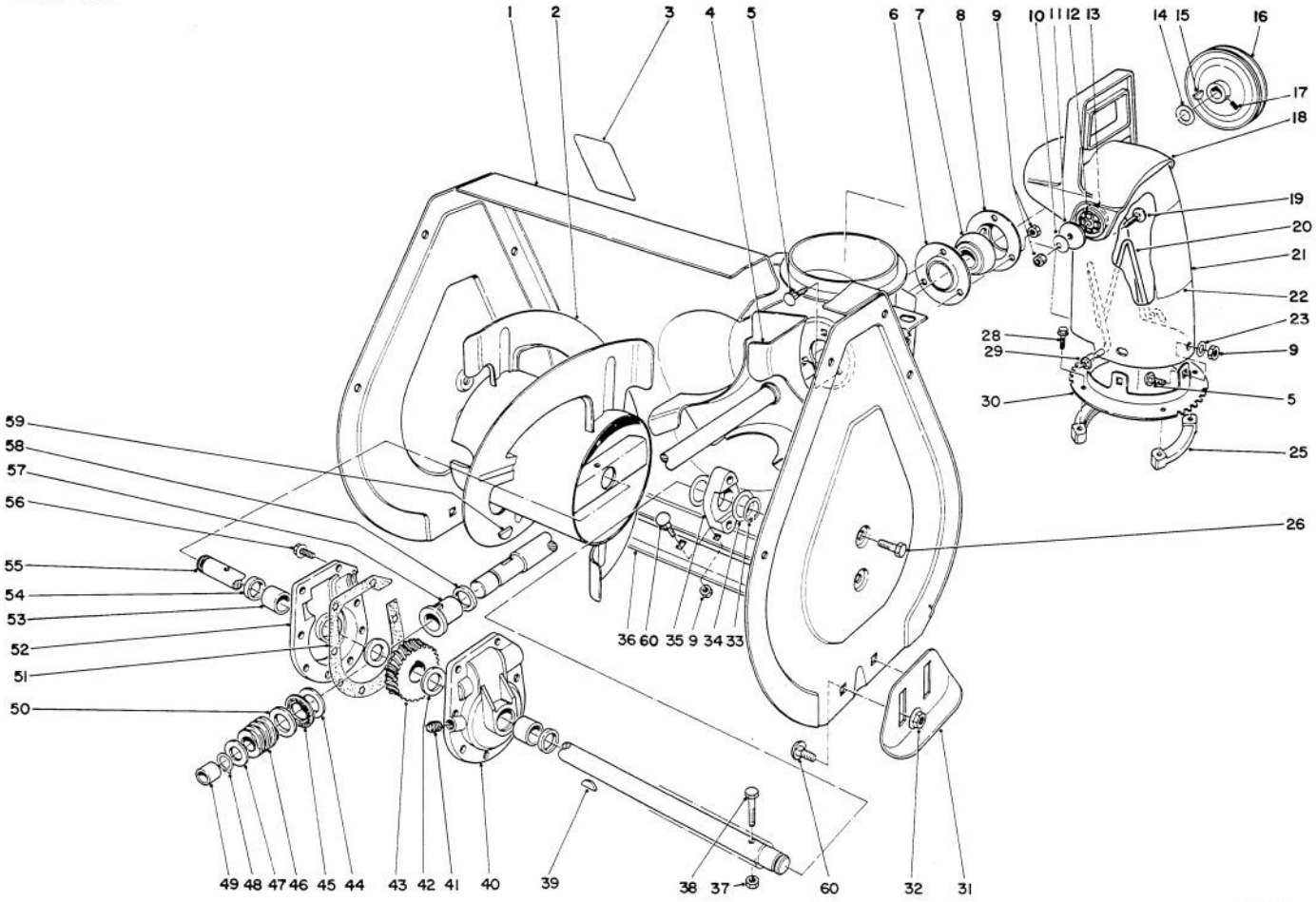

AUGER ASSEMBLY (Continued)

Ref. No.	Part No.	Description	No. Used
29	3290–326	Pushnut	1
30	37–8941	Ring – Chute	1
31	40–8160	Skid	2
32	32128–20	Nut – Flange	4
33	32151–36	Ring – Retaining	2
34	5–1550	Washer – Thrust	4
35	37–6550	Bearing – Auger	2
36	74–1420	Blade – Scraper	1
37	3296–42	Nut – Lock	2
38	321–10	Screw – Cap	2
39	3257–33	Key – Woodruff	1
40	14–2459	Gear Case L.H. (Incl. ref. #53 & 54)	1
41	281–1	Pipe – Plug	1
42	252–71	Bearing – Thrust	2
43	5–7180	Gear	1
44	257–3	Washer – Thrust	1
45	252–76	Bearing – Needle, Thrust	1
46	5–7170	Gear – Worm	1

Ref. No.	Part No.	Description	No. Used
47	3–8664	Washer	1
48	32120–72	Ring – Retaining	1
49	256–32	Bushing	1
50	252–80	Washer – Thrust	1
51	51–0460	Gasket	1
52	14–2449	Gear Case R.H. (Incl. ref. #53 & 54)	1
53	256–237	Bushing	2
54	7–0045	Seal – Oil	2
55	37–6801	Shaft – Auger	1
56	32144–41	Screw – Self Tapping	8
57	37–6560	Bushing – Input	1
58	237–87	Seal	1
59	3257–23	Key – Woodruff	1
60	3230–1	Bolt – Carriage	9
*	37–6961	Gear Case Assembly	1
*	12–8789	Bearing Assembly (Incl. ref. #6–8)	1

*Not Illustrated

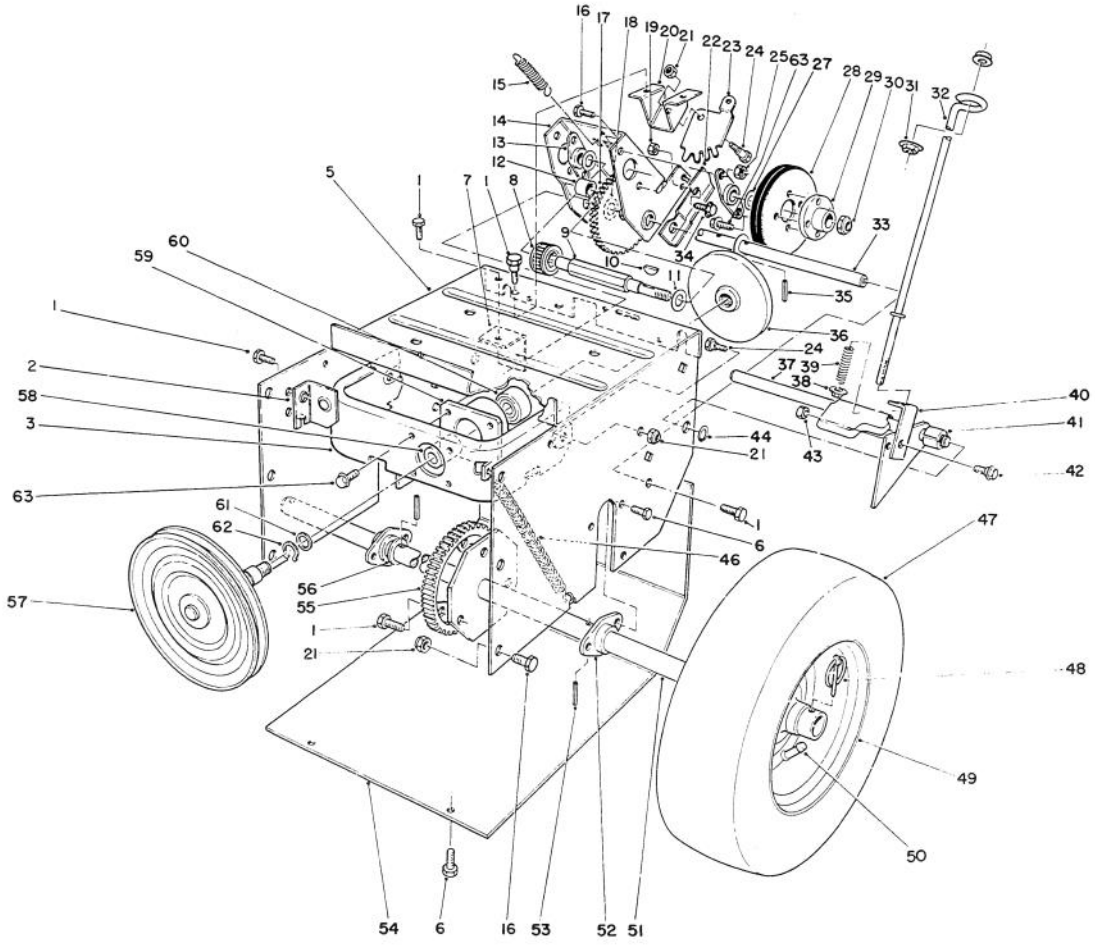

C–1277

TRACTION ASSEMBLY

Ref. No.	Part No.	Description	No. Used
1	32144–70	Screw – Self Tap.Hex. Hd.	9
2	66–6790	Mount – Clutch Rod Front	1
3	88–0550	Frame – Friction Plate	1
5	37–8900	Frame – Traction	1
6	32144–4	Screw – Self Tap.Hex. Hd.	8
7	37–9070	Mount – Clutch Rod Rear	1
8	37–6500	Gear – Sliding	1
9	37–6780	Shaft – Hex	1
10	3257–24	Key	1
11	5–7570	Washer – Thrust	2
12	256–86	Bushing	1
13	20–1620	Bearing – Friction Wheel	2
14	39–1230	Bracket – Sliding	1
15	37–8880	Spring – Traction Engage	1
16	322–2	Screw – Hex. Hd. Cap	10
17	37–9160	Intermediate Gear & Bushing (Incl. ref. #12)	1
18	10–9280	Washer – Thrust	2
19	3296–16	Nut – Lock	1
20	37–8790	Mount – Quadrant Gear	1
21	3296–29	Nut – Lock	9
22	39–1250	Cam – Receiver	1
23	37–8801	Quadrant – Gear	1

Ref. No.	Part No.	Description	No. Used
24	37–8770	Bolt – Shoulder	3
25	3296–29	Nut – Lock	4
27	36–4790	Washer – Thrust	2
28	37–6570	Wheel – Friction	1
29	39–1520	Hub – Friction Wheel Mount	1
30	3296–48	Nut – Lock	1
31	32128–33	Nut – Flange	2
32	39–3060	Rod – Lower Traction	1
33	37–6760	Shaft – Pivot	1
34	321–4	Screw – Hex. Hd.	1
35	32121–45	Pin – Roll	2
36	38–0800	Plate – Friction	1
37	43–7310	Traction Engagement Assy.	1
38	32128–32	Nut – Flange	1
39	38–4520	Spring – Compression	1
40	38–4490	Bracket – Traction	1
41	40–9680	Spacer	1
42	40–8350	Screw – Shoulder	1
43	3296–42	Nut – Lock	1
44	32151–61	Ring – Retaining	1
46	37–8870	Spring – Friction Plate Frame	1
47	231–120	Tire	2
48	3290–243	Pin – Klik	2

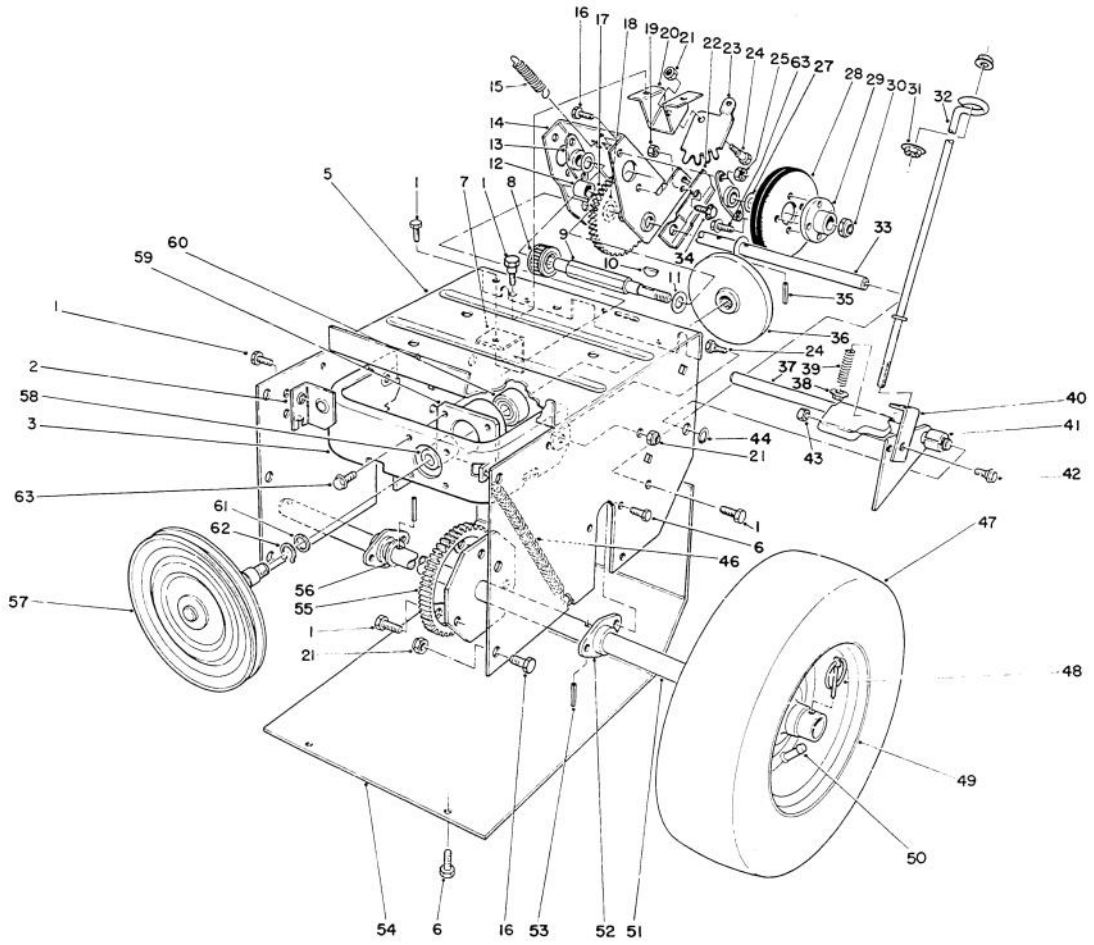

TRACTION ASSEMBLY (Continued)

Ref. No.	Part No.	Description	No. Used
49	241–131	Rim	2
50	232–46	Tube	2
51	74–1350	Shaft – Axle	1
52	37–6850	Bearing – Axle	2
53	32121–31	Pin – Roll	2
54	37–6830	Cover – Bottom	1
55	37–6520	Gear – Axle	1
56	3–8664	Washer – Thrust	2

Ref. No.	Part No.	Description	No. Used
57	88–0850	Pulley & Shaft	1
58	256–322	Bushing	1
59	88–0560	Hub – Frame	1
60	38–7820	Bearing	1
61	252–80	Washer – Thrust	1
62	32151–103	Ring – Snap	1
63	12–3270	Screw – Tapping	8

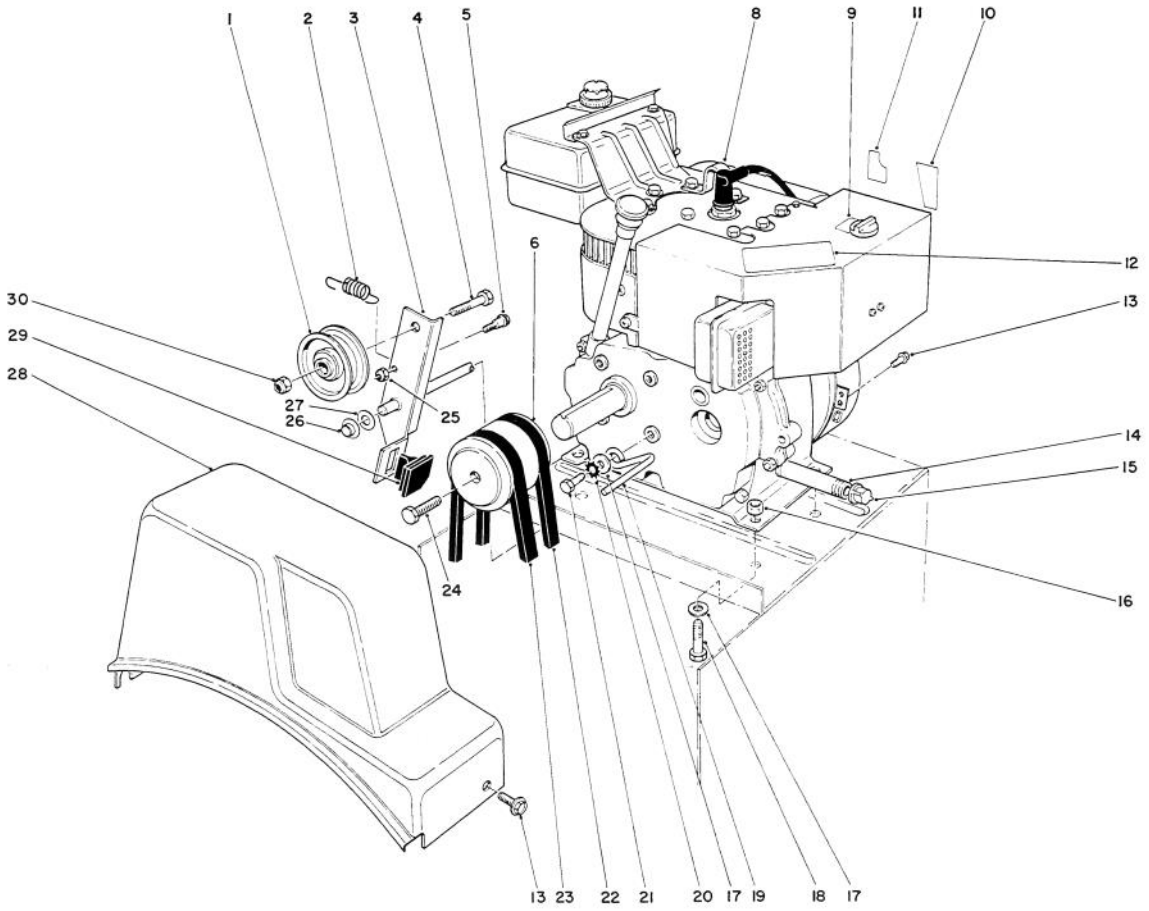

C–1278

ENGINE ASSEMBLY

Ref. No.	Part No.	Description	No. Used
1	3–4244	Idler Pulley	1
2	53–7570	Spring – Auger Disengage	1
3	14–7959	Auger Clutch (Incl. ref. #29)	1
4	323–29	Screw – Cap	1
5	42–3560	Bolt – Shoulder	1
6	74–1370	Engine Pulley	1
8		Engine	1
9	63–2420	Decal – Choke (Model 38072)	1
*	63–2430	Decal – Choke (Model 38073)	1
10	63–3190	Decal – Throttle	1
11	62–5760	Decal – Primer	1
12	66–6840	Decal – Hot Surface Warning (Model 38072)	1
*	63–2310	Decal – Hot Surface Warning (Model 38073)	1

Ref. No.	Part No.	Description	No. Used
13	32144–4	Screw – Self Tapping	3
14	289–9	Pipe Nipple	1
15	288–2	Cap	1
16	3296–29	Nut – Lock	4
17	3256–23	Washer – Flat	5
18	322–4	Screw – Cap	4
19	37–8990	Retainer – Belt	1
20	3255–8	Washer –Lock Ext. Tooth	1
21	3210–3	Screw – Cap	1
22	37–9090	V–Belt – Traction	1
23	26–9672	V–Belt – Auger	1
24	43–7290	Screw – Special	1
25	3296–56	Nut – Lock	1
26	3290–320	Nut – Push On	1
27	3256–24	Washer – Flat	1
28	37–6900	Cover – Belt	1
29	66–8060	Molded Brake Assembly	1
30	3296–59	Nut – Lock	1

*Not Illustrated

3316–332

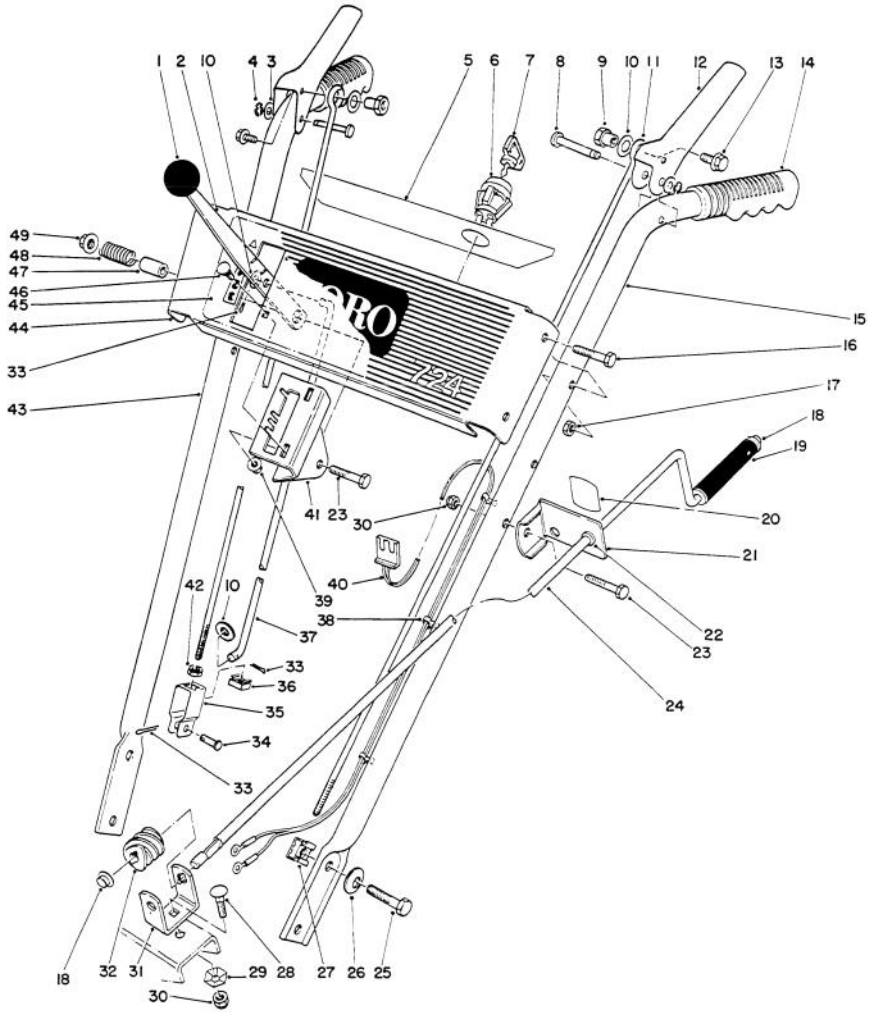

C–1279

HANDLE ASSEMBLY

Ref. No.	Part No.	Description	No. Used
1	233–21	Knob	1
2	37–8821	Selector – Speed	1
3	3256–23	Washer	2
4	32151–73	Ring – Clip	2
5	66–6830	Decal – Escutcheon Back (Model 38072)	1
*	66–6880	Decal – Escutcheon Back (Model 38073)	1
6	40–5940	Switch – On/Off	1
7	63–8360	Key – Ignition	1
8	52–5600	Pin – Control Lever	2
9	47–4990	Post – Linkage Mounting	2
10	3256–24	Washer	4
11	52–5590	Link – Upper	2
12	63–3640	Handle – Control	2
13	3234–13	Screw – Hex. Flange Hd.	2
14	74–1360	Grip – Handle	2
15	52–5571	Handle – Left (Model 38072)	1
*	52–5570	Handle – Left (Model 38073)	1
16	321–9	Screw – Hex. Hd	4
17	3296–42	Nut – Lock	4
18	3290–320	Nut – Push	2
19	66–6540	Grip – Rod	1
20	63–3510	Decal – Chute Direction	1

Ref. No.	Part No.	Description	No. Used
21	12–7739	Bracket – Chute Control (Incl. Ref.# 20 & 22)	1
22	256–249	Nyliner	1
23	322–7	Screw – Hex. Hd.	2
24	40–8270	Rod – Chute Control	1
25	322–2	Screw – Hex. Hd. Cap	4
26	3290–456	Washer – Belleville	4
27	3290–196	Retainer – Nut	4
28	3230–22	Bolt – Carriage	1
29	3290–238	Washer – Pyramidal	1
30	3296–29	Nut – Lock	2
31	40–8280	Bracket – Chute Worm	1
32	40–8250	Gear – Worm	1
33	3272–4	Pin – Cotter	3
34	283–3	Pin – Clevis	1
35	39–3080	Clevis	1
36	32115–5	Retainer – Nut	1
37	74–1490	Rod – Speed Selector	1
38	17–9120	Mount – Wire	3
39	32128–33	Nut – Flange Lock	2
40	43–7390	Wire Harness Assembly	1
41	39–1280	Mount – Speed Selector	1
42	3218–1	Nut – Jam	1

*Not Illustrated

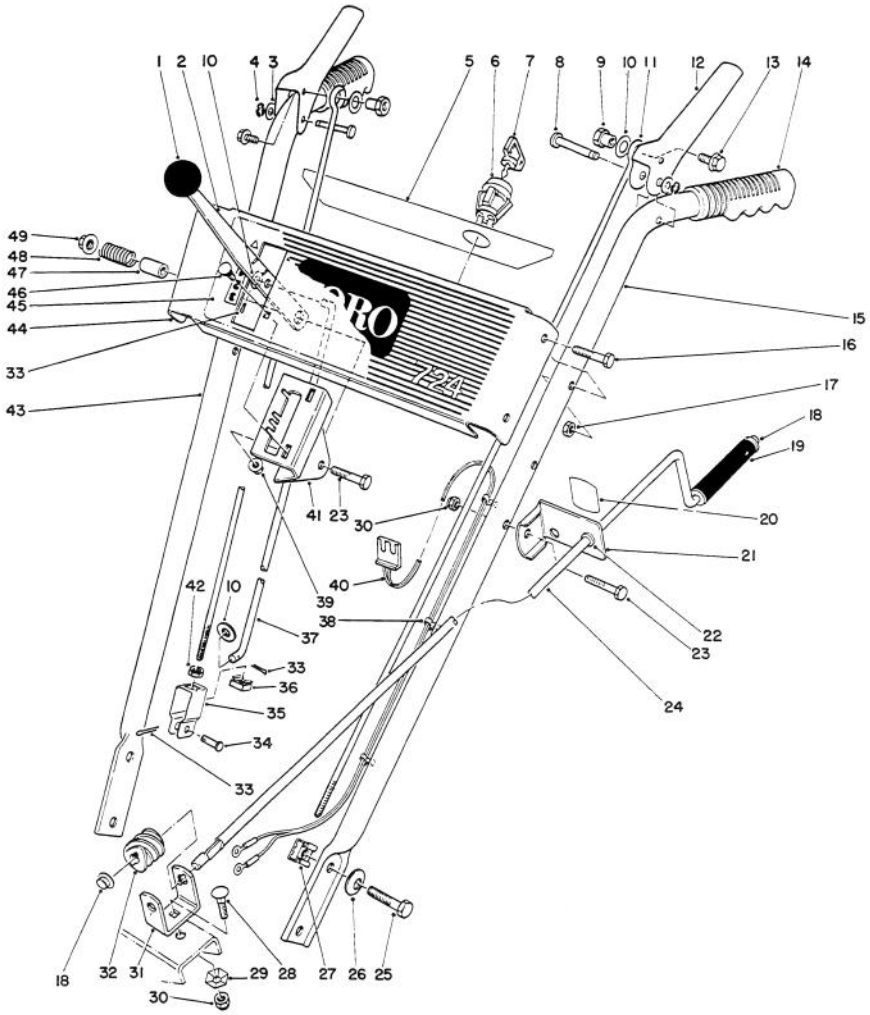

C–1279

HANDLE ASSEMBLY (Cont.)

Ref. No.	Part No.	Description	No. Used
43	52–5561	Handle – Right (Model 38072)	1
*	52–5560	Handle – Right (Model 38073)	1
44	43–7360	Panel – Escutcheon	1
45	88–0740	Decal – 724	1

Ref. No.	Part No.	Description	No. Used
46	3229–11	Bolt – Carriage	2
47	40–8130	Spacer – Speed Selector	1
48	37–9150	Spring	1
49	32128–13	Nut – Flange Lock	1
*	3290–378	Cable Tie	2

*Not Illustrated

ENGINE TECUMSEH MODEL HSK70–130282S

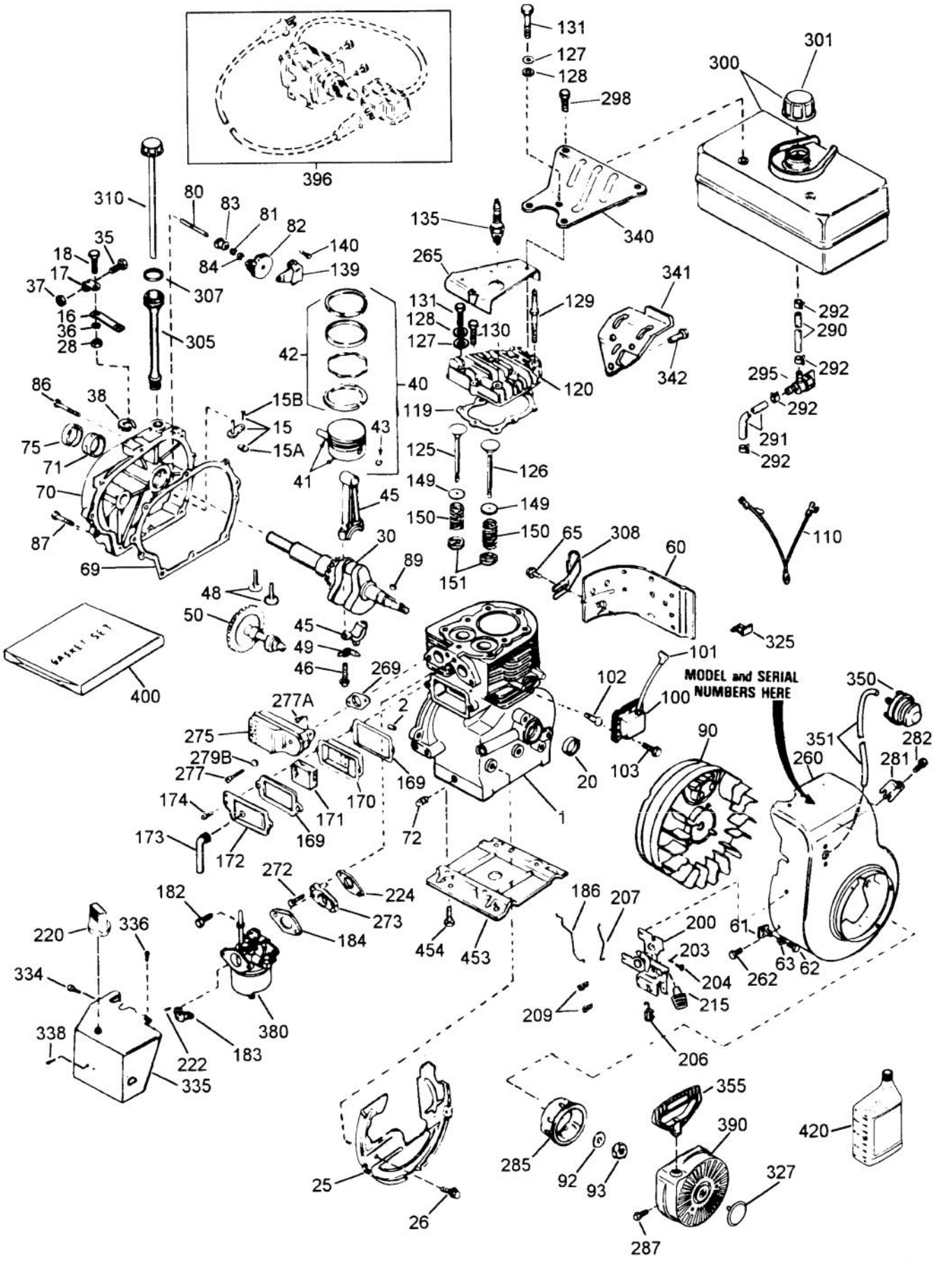

ENGINE TECUMSEH MODEL HSK70–130282S

Ref. No.	Part No.	Description	No. Used
1	32586C	Cylinder (Incl. Ref. #2 & 20)	1
2	27652	Dowel Pin	2
15	30699C	Governor Rod (Incl. Ref. #15A & 15B)	1
15A	30700	Governor Yoke	1
15B	650494	Screw	1
16	33454	Governor Lever	1
17	29916	Governor Lever Clamp	1
18	650548	Screw	1
20	32630	Oil Seal	1
25	35326	Blower Housing Baffle	1
26	650561	Screw	2
28	30322	Lock Nut	1
30	35272	Crankshaft	1
35	29826	Screw	1
36	29918	Lock Washer	1
37	29216	Lock Nut	1
38	29642	Retaining Ring	1
40	34518	Piston, Pin & Ring Set (.010" OS)	1
40	34519	Piston, Pin & Ring Set (.020" OS)	1
40	34517	Piston, Pin & Ring Set (Std.)	1
41	32593B	Piston & Pin Ass'y (.010" OS) (Incl. Ref. #43)	1
41	32594B	Piston & Pin Ass'y (.020" OS) (Incl. Ref. #43)	1
41	32592B	Piston & Pin Ass'y (Std.) (Incl. Ref. #43)	1
42	32595	Ring Set (Std.)	1
42	32597	Ring Set (.020" OS)	1
42	32596	Ring Set (.010" OS)	1
43	27888	Piston Pin Retaining Ring	2
45	32591C	Connecting Rod Ass'y (Incl. Ref. #46 & 49)	1
46	650662C	Connecting Rod Bolt	2
48	34034	Valve Lifter	2
49	34242	Oil Dipper	1
50	32115	Camshaft (MCR)	1
60	30622A	Blower Housing Extension	1
61	34126	Grommet Mounting Bracket	1
62	650760	Screw	1
63	28545	Grommet	1
65	650128	Screw	1
69	30684	Cylinder Cover Gasket	1PK
*70	31303C	Cylinder Cover (Incl. Ref. #71, 75, & 80)	1
71	31546	Crankshaft Bushing	1
72	27642	Oil Drain Plug	2
75	28427	Oil Seal	1
80	31845	Governor Shaft	1
81	30590A	Washer	1
82	30591	Governor Gear Ass'y	1
83	30588A	Governor Spool	1
84	29193	Retaining Ring	1
86	650488	Screw	7
87	650493	Screw	1
89	32589	Flywheel Key	1
90	611085	Flywheel	1
92	650815	Belleville Washer	1
93	650871	Flywheel Nut	1
100	34443A	Solid State Ignition	1
101	610118	Spark Plug Cover	1
102	650872	Solid State Mounting Stud	2
103	650814	Screw, Torx T–15	2
110	35253	Ground Wire	1
*119	36453	Cylinder Head Gasket	1PK
120	36446	Cylinder Head (Incl. 3 of 131)	1
125	27878A	Exhaust Valve (Std.) (Incl. Ref. #151)	1
125	27880A	Exhaust Valve (1/32" OS) (Incl. Ref. #151)	1
126	32784	Intake Valve (1/32" OS) (Incl. Ref. #151)	1
126	32783	Intake Valve (Std.) (Incl. Ref. #151)	1
127	650691	Washer	3
128	650690	Belleville Washer	3
129	650697A	Screw	2
130	650697A	Screw	3
131	650697A	Screw	3
135	35395	Resistor Spark Plug (RJ19LM)	1
139	31843A	Governor Gear Bracket	1
140	650965	Screw, Torx T–25	2
149	27882	Valve Spring Cap	2
150	27881	Valve Spring	2
151	32581	Valve Spring Keeper	2
*169	27896A	Valve Cover Gasket	2PK
170	28423	Breather Body	1
171	28424	Breather Element	1
172	28425	Valve Cover	1
173	35350	Breather Tube	1
174	650128	Screw	2
182	650517	Screw	2
183	32398	Choke Bracket	1
*184	31688A	Carburetor To Intake Pipe Gasket	1PK
186	34661	Governor Link	1
200	34677	Control Bracket (Incl. Ref. #203, 204, & 206)	1
203	31342	Compression Spring	1
204	650549	Screw	1
206	610973	Terminal	1
207	34662	Throttle Link	1
209	650821	Screw	2
215	35440	Control Knob	1
220	35439	Control Knob	1
222	28820	Screw	2
*224	27915A	Intake Pipe Gasket	1PK
260	36154	Blower Housing	1
262	29747B	Screw, Torx T–40	2
265	30939A	Cylinder Head Cover	1
*269	35865	Exhaust Maniford Gasket	1PK
272	30196	Screw	2
273	34712	Carburetor Flange	1

*Included in Gasket Set Ref. #400.

ENGINE TECUMSEH MODEL HSK70-130282S

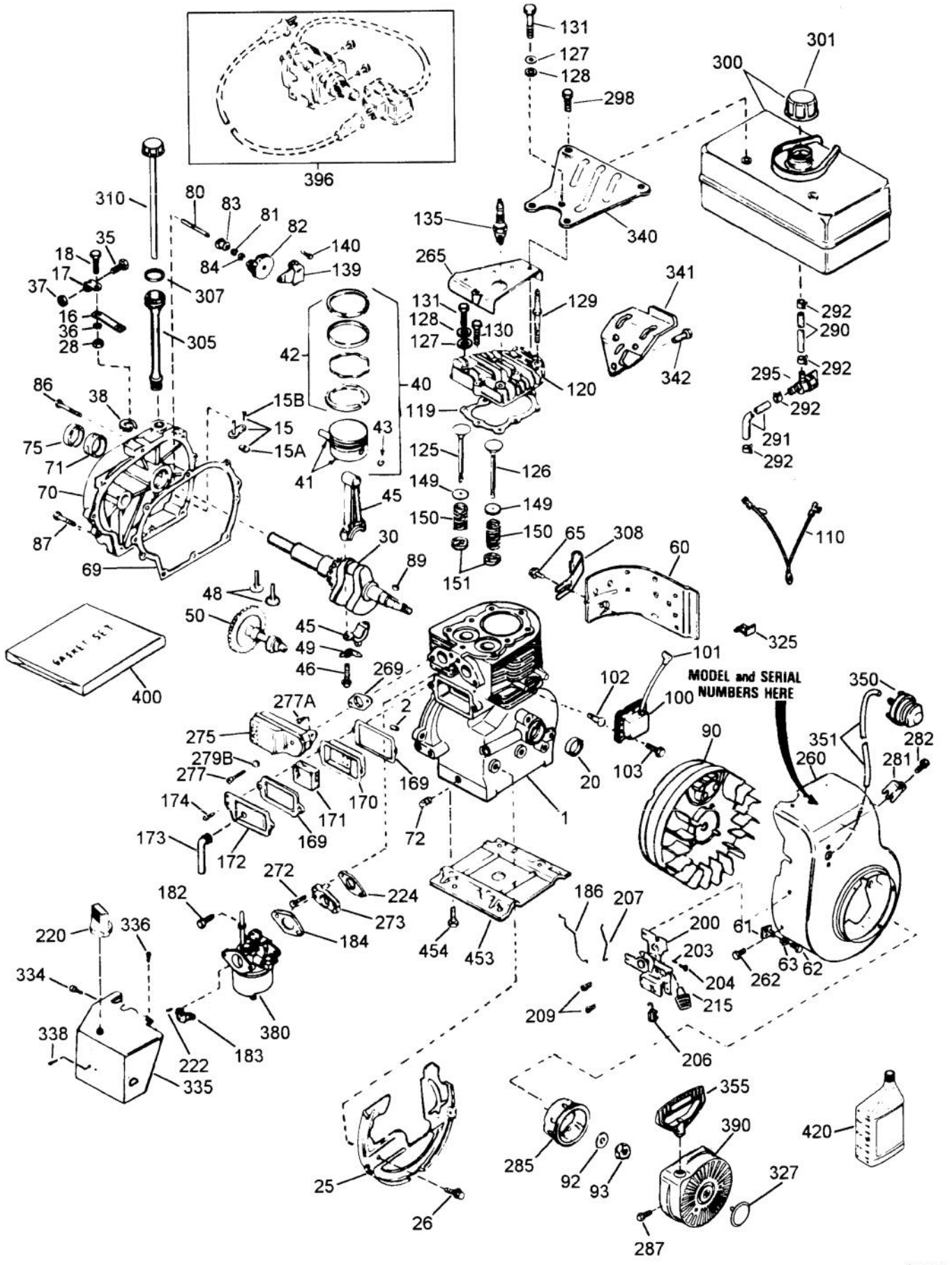

ENGINE TECUMSEH MODEL HSK70–130282S

Ref. No.	Part No.	Description	No. Used
275	32401	Muffler	1
277	650694A	Screw	1
277A	30196	Screw	1
279B	26073	Washer	1
281	33013	Starter Bubble Cover	1
282	650760	Screw	1
285	32125	Starter Cup	1
287	650926	Screw	3
290	29774	Fuel Line	1
291	30962	Fule Line	1
292	26460	Fuel Line Clamp	4
295	35857	Fuel Shut–Off Valve	1
298	650665	Screw	2
299	650764	"U" Type Nut	1
300	34186A	Fuel Tank (Incl. Ref. #292 & 301)	1
301	35355	Fuel Cap	1
305	35554	Oil Fill Tube	1
307	35499	"O" Ring	1
308	35540	Fill Tube Clip	1
310	35555	Dipstick	1
325	29443	Wire Clip	1

Ref. No.	Part No.	Description	No. Used
327	35392	Starter Plug	1
334	650257	Screw	2
335	35060	Carburetor Cover	1
336	650765	Screw	1
338	650760	Screw	1
340	34159	Fuel Tank Bracket	1
341	34158	Fuel Tank Bracket	1
342	650561	Screw	1
350	570682	Primer Ass'y	1
351	32180C	Primer Line	1
355	590574	Starter Handle	1
380	632371A	Carburetor (Incl. Ref. #184)	1
390	590646	Rewind Starter	1
396	33329D	Electric Starter Motor (Optional)	1
400	33239A	Gasket Set	1
420	730225	Sae 30 4–Cycle Engine Oil (Quart)	1
453	29058	Engine Mounting Base	1
454	650542	Screw	4

*Included in Gasket Set Ref. #400.

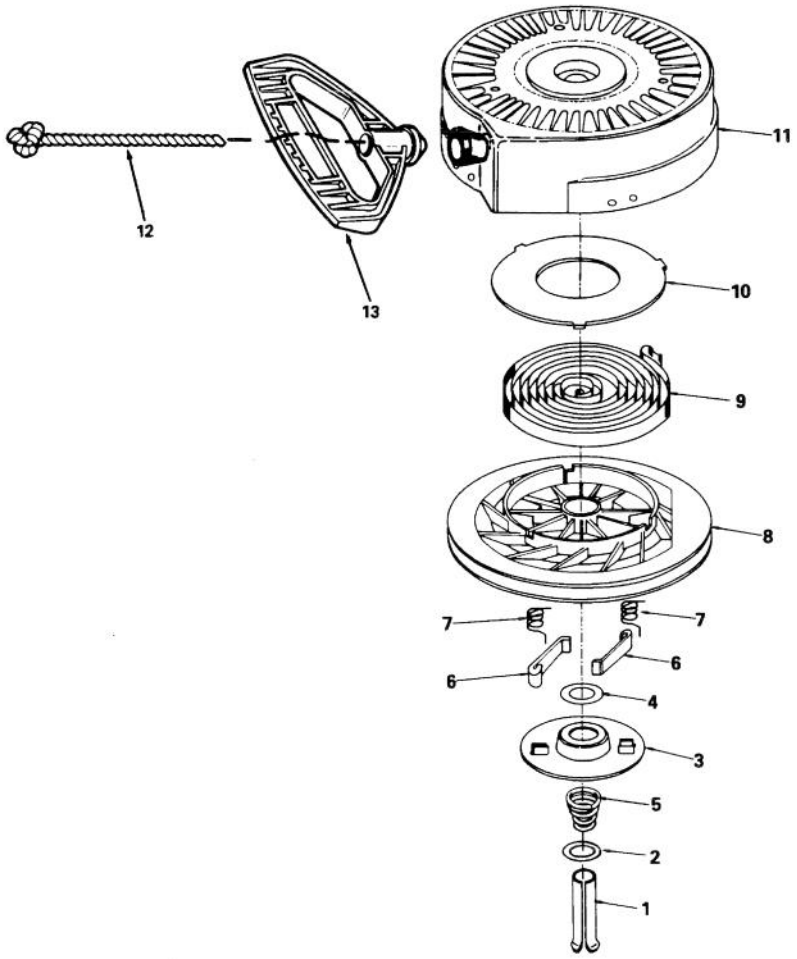

C–1758

REWIND STARTER NO. 590646

Ref. No.	Part No.	Description	No. Used
1	590599A	Pin – Spring (Incl. Ref. #4)	1
2	590600	Washer	1
3	590615	Retainer	1
4	590601	Washer	1
5	590598	Spring – Brake	1
6	590616	Dog – Starter	2
7	590617	Spring – Dog	2
8	590645A	Pulley (Incl. Ref. #9, & 10)	1

Ref. No.	Part No.	Description	No. Used
9	590619	Spring – Rewind	1
10	590620	Cover – Spring	1
11	590647	Housing Assembly	1
12	590535	Rope – 9/64" dia. 98"Lg.	1
13	590574	Handle – Mitten Grip (Not included with Starter)	1
*	590646	Starter – Rewind (Incl. Ref. #1–13)	1

*Not Illustrated

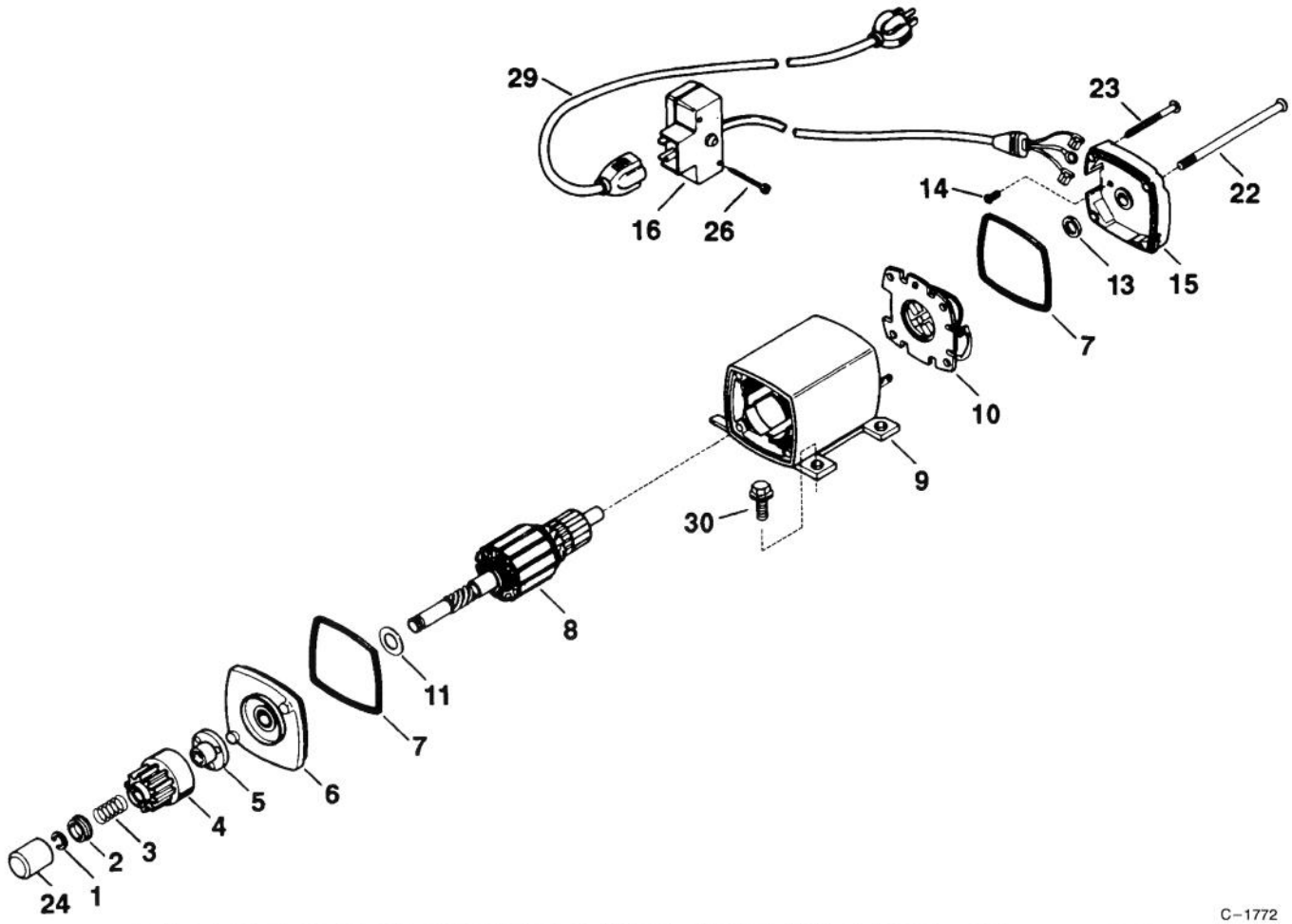

C–1772

ELECTRIC STARTER MOTOR KIT NO. 38–7590

Ref. No.	Part No.	Description	No. Used
1	33842	Ring – Retainer	1
2	33430	Retainer – Spring	1
3	33431	Spring – Anti–Drift	1
4	33432	Gear	1
5	35913	Nut & Retainer (Incl. Ref. #1)	1
6	35449	Cap Assembly – Drive End (Incl. Ref. #7)	1
7	35450	"O" Ring	2
8	35914	Armature	1
9	35457A	Housing Assembly	1
10	35452A	Card Assembly – Brush	1
11	35911	Washer – Thrust	1

Ref. No.	Part No.	Description	No. Used
13	590500	Washer – Thrust	1
14	33441	Screw – Ground	1
15	35453	Cap Assy., Commutator End (Incl. Ref. #7)	1
16	35454	Box Assembly – Switch (Incl. Ref. #26)	1
22	35458	Bolt – Case	2
23	35456	Screw – Grounding	1
24	33451	Cover – Dust	1
26	650819	Screw – Hex. Hd.	2
29	32450B	Cord – Extension, 10' 6"	1
30	30063	Screw – Hex. Hd.	4

Note: Order individual parts from your local Tecumseh dealer.

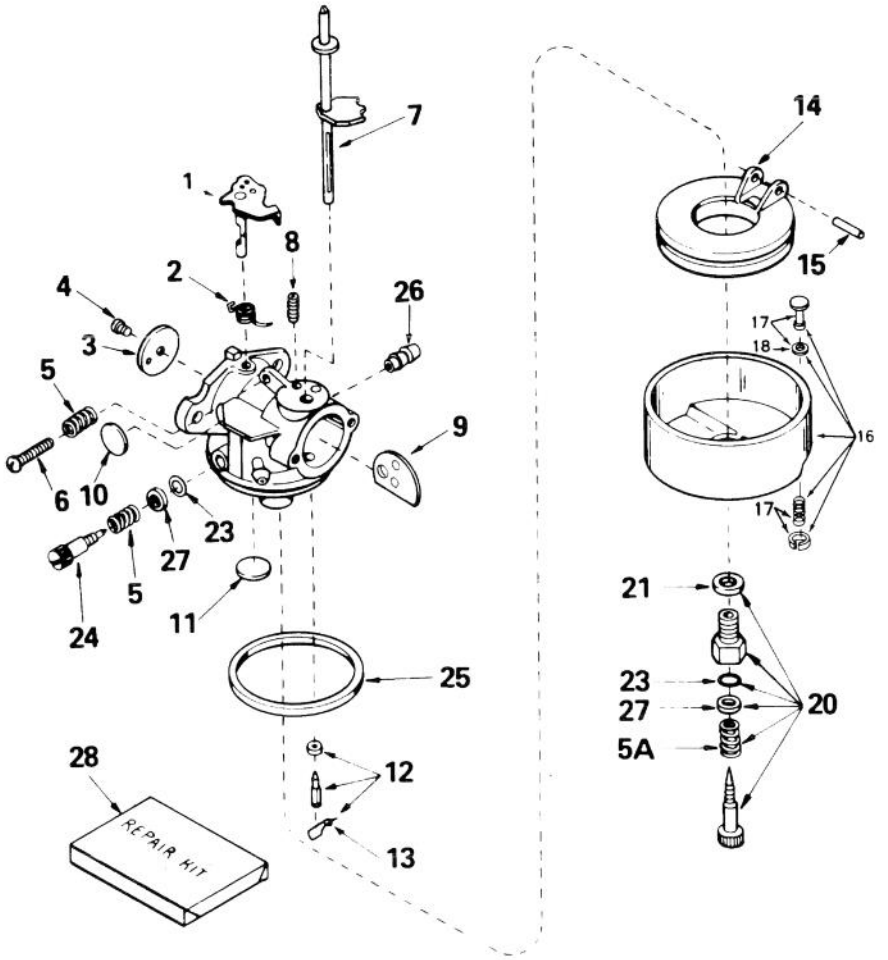

C–1773

CARBURETOR NO. 632371A

Ref. No.	Part No.	Description	No. Used
1	31834	Shaft & Lever Assembly	1
2	631767	Spring – Throttle Return	1
3	631036	Shutter – Throttle	1
4	650506	Screw	2
5	630766	Spring – Idle Screw	2
5A	630738	Spring	1
6	650417	Screw – Idle	1
7	632373	Shaft & Lever Assy.(Choke)	1
8	630735	Spring – Choke Stop	1
9	632372	Shutter – Choke	1
10	630748†	Plug – Welch	1
11	631027†	Plug – Welch	1
12	631021†	Inlet Needle – Seat & Clip (Incl. Ref. #13)	1
13	631022	Clip – Inlet Needle	1
14	632019	Float – Carburetor	1
15	631024†	Shaft – Float	1

Ref. No.	Part No.	Description	No. Used
16	631951	Bowl – Assembly (Incl. Ref. #17 & 18)	1
17	27136A	Drain Assembly – Bowl (Incl. Ref. #18)	1
18	27554	Gasket – Bow Drain	1
20	31839†	Screw Adjustment Assembly (Incl. Ref. #5A, 21, 23, & 27)	1
21	27110	Gasket – Bowl–to–Body	1
23	630740†	"O" Ring	1
24	631838†	Screw – Idle	1
25	631028†	Gasket – Bowl–to–Body	1
26	632164	Fitting – Fuel Inlet	1
27	630739	Washer – Flat	2
28	31840	Repair Kit (Incl. Items Marked †)	1
*	632371A	Carburetor (Incl. Ref. #1–28)	1

* Not Illustrated

TORO PART NUMBER INDEX

Part No.	Description	Pg. No.	Ref. No.	Qty.
3–0737	Washer	1	14	1
3–4244	Idler Pulley	5	1	1
3–8664	Washer	2	47	1
3–8664	Washer – Thrust	4	56	2
5–1550	Washer – Thrust	2	34	4
5–7170	Gear – Worm	2	46	1
5–7180	Gear	2	43	1
5–7570	Washer – Thrust	3	11	2
7–0045	Seal – Oil	2	54	2
10–9280	Washer – Thrust	3	18	2
12–3270	Screw – Tapping	4	63	8
12–7739	Bracket – Chute Control	6	21	1
12–8749	Chute – Discharge	1	*	1
12–8789	Bearing Assembly	2	*	1
13–7979	Chute – Discharge	1	21	1
14–2449	Gear Case R.H.	2	52	1
14–2459	Gear Case L.H.	2	40	1
14–7959	Auger Clutch	5	3	1
14–8119	Housing–Auger	1	1	1
17–9120	Mount – Wire	6	38	3
20–1620	Bearing – Friction Wheel	3	13	2
20–4320	Washer – Rubber	1	13	2
26–9672	V–Belt – Auger	5	23	1
27–0220	Screw – Self Tapping	1	28	6
36–4790	Washer – Thrust	3	27	2
37–6490	Retainer – Chute Ring	1	25	3
37–6500	Gear – Sliding	3	8	1
37–6520	Gear – Axle	4	55	1
37–6550	Bearing – Auger	2	35	2
37–6560	Bushing – Input	2	57	1
37–6570	Wheel – Friction	3	28	1
37–6760	Shaft – Pivot	3	33	1
37–6780	Shaft – Hex	3	9	1
37–6801	Shaft – Auger	2	55	1
37–6830	Cover – Bottom	4	54	1
37–6850	Bearing – Axle	4	52	2
37–6890	Pulley	1	16	1
37–6900	Cover – Belt	5	28	1
37–6961	Gear Case Assembly	2	*	1
37–6990	Shaft & Impeller	1	4	1
37–8770	Bolt – Shoulder	3	24	3
37–8790	Mount – Quadrant Gear	3	20	1
37–8801	Quadrant – Gear	3	23	1
37–8821	Selector – Speed	6	2	1
37–8870	Spring – Friction Plate Frame	3	46	1
37–8880	Spring – Traction Engage	3	15	1
37–8900	Frame – Traction	3	5	1
37–8941	Ring – Chute	2	30	1
37–8990	Retainer – Belt	5	19	1
37–9070	Mount – Clutch Rod Rear	3	7	1
37–9090	V–Belt – Traction	5	22	1
37–9150	Spring	7	48	1
37–9160	Intermediate Gear & Bushing	3	17	1
38–0800	Plate – Friction	3	36	1
38–4490	Bracket – Traction	3	40	1
38–4520	Spring – Compression	3	39	1
38–7820	Bearing	4	60	1
39–1230	Bracket – Sliding	3	14	1
39–1250	Cam – Receiver	3	22	1
39–1280	Mount – Speed Selector	6	41	1
39–1520	Hub – Friction Wheel Mount	3	29	1
39–3060	Rod – Lower Traction	3	32	1
39–3080	Clevis	6	35	1
40–5940	Switch – On/Off	6	6	1
40–8130	Spacer – Speed Selector	7	47	1
40–8160	Skid	2	31	2
40–8250	Gear – Worm	6	32	1
40–8270	Rod – Chute Control	6	24	1
40–8280	Bracket – Chute Worm	6	31	1
40–8350	Screw – Shoulder	3	42	1
40–9680	Spacer	3	41	1
42–3560	Bolt – Shoulder	5	5	1
43–7290	Screw – Special	5	24	1
43–7310	Traction Engagement Assy.	3	37	1
43–7360	Panel – Escutcheon	7	44	1
43–7390	Wire Harness Assembly	6	40	1
47–4990	Post – Linkage Mounting	6	9	2
51–0460	Gasket	2	51	1
52–5560	Handle – Right	7	*	1
52–5561	Handle – Right	7	43	1
52–5570	Handle – Left (Model 38073)	6	*	1
52–5571	Handle – Left (Model 38072)	6	15	1
52–5590	Link – Upper	6	11	2
52–5600	Pin – Control Lever	6	8	2
53–7570	Spring – Auger Disengage	5	2	1
53–7670	Decal – Auger Warning	1	3	1
55–8950	Plate – Friction	1	12	2
56–2670	Chute – Wire	1	20	1
56–2680	Deflector	1	18	1
62–5760	Decal – Primer	5	11	1
63–2310	Decal – Hot Surface Warning	5	*	1
63–2420	Decal – Choke	5	9	1
63–2430	Decal – Choke	5	*	1
63–3190	Decal – Throttle	5	10	1
63–3450	Bearing – Ball	1	7	1
63–3510	Decal – Chute Direction	6	20	1
63–3640	Handle – Control	6	12	2
63–3740	Decal – Discharge	1	22	1
63–3760	Decal – Discharge	1	*	1
63–8360	Key – Ignition	6	7	1
66–6540	Grip – Rod	6	19	1
66–6790	Mount – Clutch Rod Front	3	2	1
66–6830	Decal – Escutcheon Back	6	5	1
66–6840	Decal – Hot Surface Warning	5	12	1
66–6880	Decal – Escutcheon Back	6	*	1
66–8060	Molded Brake Assembly	5	29	1
74–1350	Shaft – Axle	4	51	1
74–1360	Grip – Handle	6	14	2
74–1370	Engine Pulley	5	6	1
74–1420	Blade – Scraper	2	36	1
74–1490	Rod – Speed Selector	6	37	1
74–1590	Auger – L.H.	1	*	1
74–1600	Auger – R.H.	1	2	1
88–0550	Frame – Friction Plate	3	3	1
88–0560	Hub – Frame	4	59	1
88–0740	Decal – 724	7	45	1
88–0850	Pulley & Shaft	4	57	1
231–120	Tire	3	47	2
232–46	Tube	4	50	2
233–21	Knob	6	1	1
237–87	Seal	2	58	1
241–131	Rim	4	49	2
252–71	Bearing – Thrust	2	42	2
252–76	Bearing – Needle, Thrust	2	45	1
252–80	Washer – Thrust	2	50	1
252–80	Washer – Thrust	4	61	1
256–32	Bushing	2	49	1
256–86	Bushing	3	12	1

*Not Illustrated

TORO PART NUMBER INDEX (Cont.)

Part No.	Description	Pg. No.	Ref. No.	Qty.
256-237	Bushing	2	53	2
256-249	Nyliner	6	22	1
256-322	Bushing	4	58	1
257-3	Washer - Thrust	2	44	1
281-1	Pipe - Plug	2	41	1
283-3	Pin - Clevis	6	34	1
288-2	Cap	5	15	1
289-9	Pipe Nipple	5	14	1
321-4	Screw - Hex. Hd.	3	34	1
321-9	Screw - Hex. Hd	6	16	4
321-10	Screw - Cap	2	38	2
322-2	Screw - Hex. Hd. Cap	3	16	10
322-2	Screw - Hex. Hd. Cap	6	25	4
322-4	Screw - Cap	5	18	4
322-7	Screw - Hex. Hd.	6	23	2
323-29	Screw - Cap	5	4	1
3210-3	Screw - Cap	5	21	1
3218-1	Nut - Jam	6	42	1
3229-11	Bolt - Carriage	7	46	2
3230-1	Bolt - Carriage	2	60	9
3230-18	Bolt - Carriage	1	5	6
3230-22	Bolt - Carriage	1	19	2
3230-22	Bolt - Carriage	6	28	1
3234-13	Screw - Hex. Flange Hd.	6	13	2
3242-4	Screw - Set	1	17	2
3255-8	Washer -Lock Ext. Tooth	5	20	1
3256-23	Washer	6	3	2
3256-23	Washer	1	23	3
3256-23	Washer - Flat	5	17	5
3256-24	Washer	6	10	4
3256-24	Washer - Flat	5	27	1
3256-68	Washer - Flat	1	11	2
3257-23	Key	1	15	1
3257-23	Key - Woodruff	2	59	1
3257-24	Key	3	10	1
3257-33	Key - Woodruff	2	39	1
3272-4	Pin - Cotter	6	33	3
3290-196	Retainer - Nut	4	6	27
3290-238	Washer - Pyramidal	6	29	1
3290-243	Pin - Klik	3	48	2
3290-320	Nut - Push	6	18	2
3290-320	Nut - Push On	5	26	1
3290-326	Pushnut	2	29	1
3290-340	Washer - Belleville	1	10	2
3290-378	Cable Tie	7	*	2
3290-456	Washer - Belleville	6	26	4
3296-16	Nut - Lock	3	19	1
3296-29	Nut - Lock	5	16	4
3296-29	Nut - Lock	3	21	9
3296-29	Nut - Lock	3	25	4
3296-29	Nut - Lock	6	30	2
3296-29	Nut - Lock	1	9	13
3296-42	Nut - Lock	6	17	4
3296-42	Nut - Lock	2	37	2
3296-42	Nut - Lock	3	43	1
3296-48	Nut - Lock	3	30	1
3296-56	Nut - Lock	5	25	1
3296-59	Nut - Lock	5	30	1
32115-5	Retainer - Nut	6	36	1
32120-72	Ring - Retaining	2	48	1
32121-31	Pin - Roll	4	53	2
32121-45	Pin - Roll	3	35	2
32128-13	Nut - Flange Lock	7	49	1
32128-20	Nut - Flange	2	32	4
32128-32	Nut - Flange	3	38	1
32128-33	Nut - Flange	3	31	2
32128-33	Nut - Flange Lock	6	39	2
32144-4	Screw - Self Tap.Hex. Hd.	3	6	8
32144-4	Screw - Self Tapping	5	13	3
32144-41	Screw - Self Tapping	2	56	8
32144-70	Screw - Self Tap.Hex. Hd.	3	1	9
32144-70	Screw - Self Tapping	1	26	4
32151-36	Ring - Retaining	2	33	2
32151-61	Ring - Retaining	3	44	1
32151-73	Ring - Clip	6	4	2
32151-103	Ring - Snap	4	62	1

OPTIONAL EQUIPMENT

110 Vac Electric Starter Kit .... Part No. 38-7590
Drift Breaker ..... Part No. 37-7020
Light Kit ..... Part No. 54-9822
Tire Chain Kit ..... Part No. 56-2700
Snow Cab Kit ..... Part No. 88-0600

*Not Illustrated