FORM NO. 3316–340

TORO

MODEL NO. 38540–4900001 & UP
MODEL NO. 38543–4900001 & UP

PARTS CATALOG

824 SNOWTHROWER

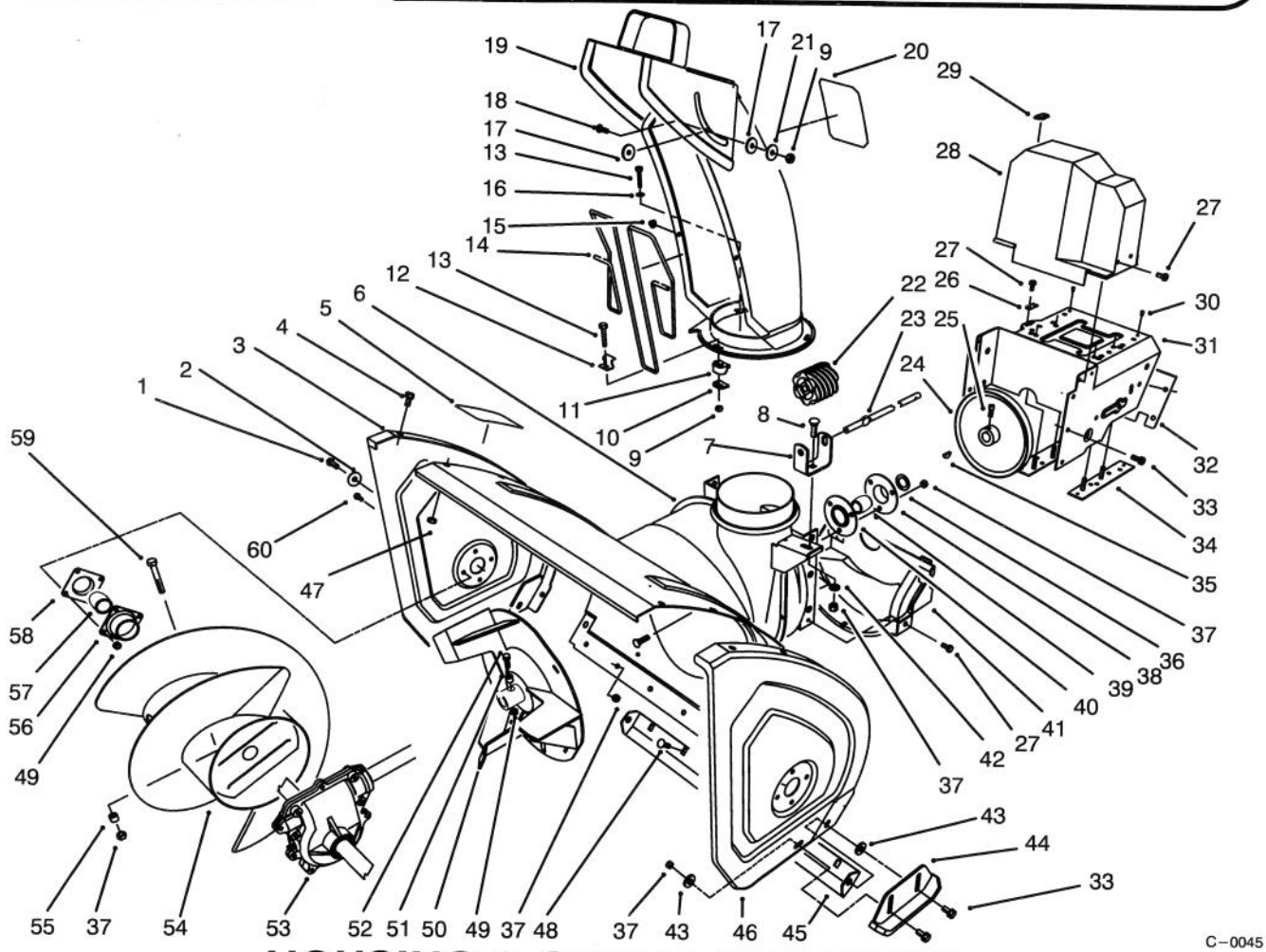

C–0045

HOUSING & CHUTE ASSEMBLY

Ref. No.	Part No.	Description	No. Used
1	323–6	Screw – Hex Hd.	2
2	3–0750	Washer – Retaining	2
3	66–7821	Plate – Side R.H.	1
4	3234–28	Screw – Hex Flange Hd.	12
5	53–7670	Decal – Danger Auger	1
6	62–0720	Housing – 24"	1
7	63–2180	Bracket – Gear	1
8	3230–2	Bolt – Carriage	1
9	3296–2	Nut – Lock	4
10	63–2670	Plate – Chute Retainer	3
11	62–1430	Retainer – Chute	3
12	63–3130	Clip – Chute Guard	1
13	3274–13	Screw – Machine	3
14	63–3020	Guard – Chute	1
15	3290–326	Nut – Push	2
16	3256–14	Washer – Flat	3
17	63–2900	Washer – Plastic	2
18	32122–32	Screw	1

Ref. No.	Part No.	Description	No. Used
19	62–0840	Chute Assembly	1
20	63–3740	Decal – Danger Chute Model 38540	1
*	53–7660	Decal – Danger Chute Model 38543	1
21	3256–61	Washer – Flat	1
22	62–0820	Gear – Worm	1
23	62–1720	Rod – Chute Gear	1
24	62–1300	Pulley – Impeller	1
25	3242–4	Screw – Set Sq. Hd.	2
26	63–2300	Retainer – Cable	1
27	32144–4	Screw – Hex. Flange Hd.	6
28	63–2080	Cover – Belt (Upper)	1
29	63–3290	Cover – Cable	1
30	3269–23	Rivet	4
31	66–6980	Frame – Engine	1
32	62–1440	Cover – Engine Frame	1
33	3234–5	Screw – Hex. Washer Hd.	10

*Not Illustrated

© The TORO Company –1993
All Rights Reserved

TPS

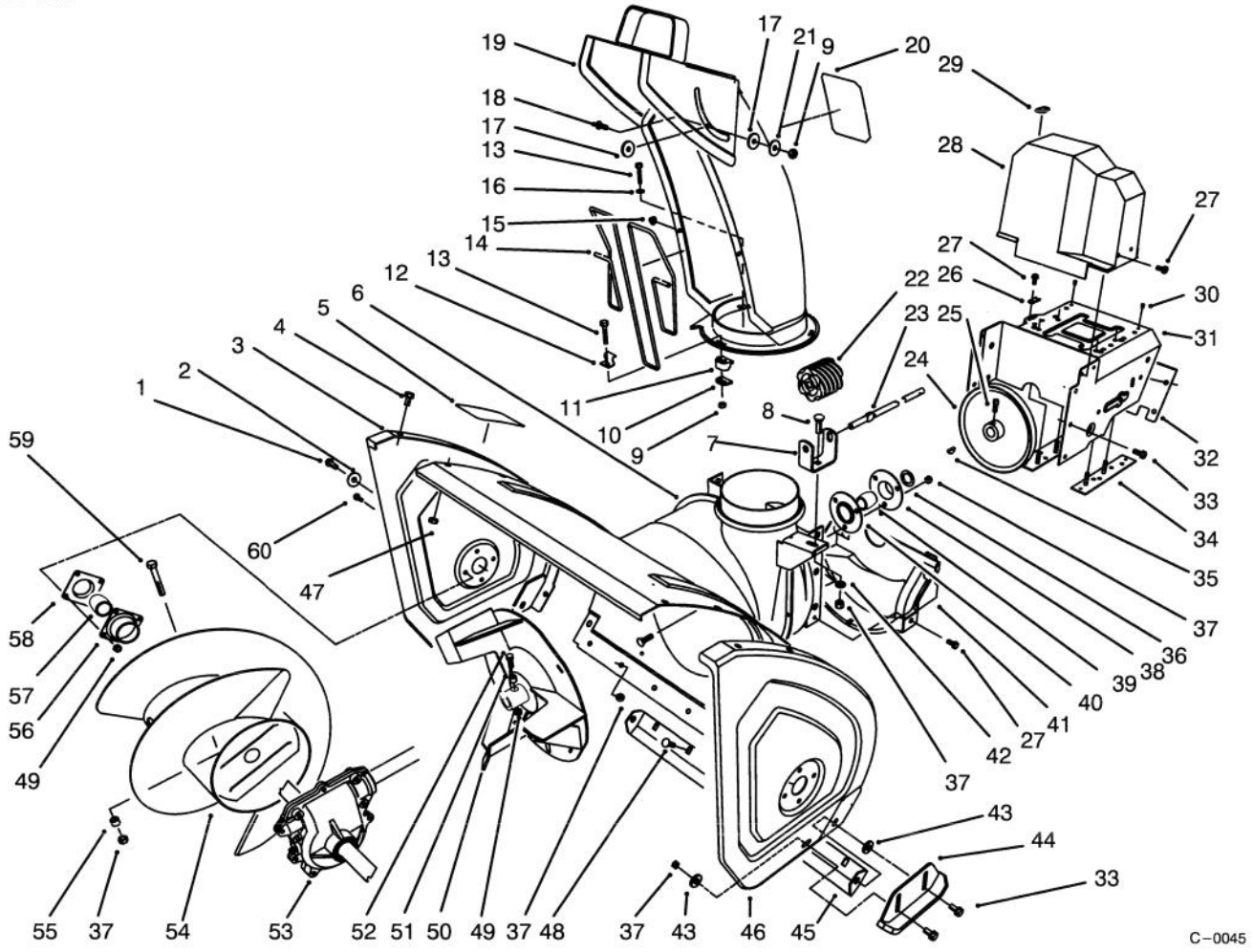

HOUSING & CHUTE ASSEMBLY (Continued)

Ref. No.	Part No.	Description	No. Used
34	68–4110	Plate – Engine Stud L.H.	1
*	68–4100	Plate – Engine Stud R.H.	1
35	3257–23	Key – Woodruff	1
36	252–80	Washer – Thrust	1
37	3296–29	Nut – Lock	14
38		Flange – Bearing (Front)	1
39	63–3450	Bearing – Impeller	1
40		Flange – Bearing ((Rear)	1
41	68–8410	Cover – Belt (Lower)	1
42	3256–23	Washer – Flat	1
43	52–2861	Washer	4
44	74–1440	Skid Assembly	2
45	66–7762	Blade – Scraper	1
46	66–7831	Plate – Side L.H.	1
47	3296–47	Nut – Lock	12
48	3230–23	Screw – Carriage	9
49	3296–42	Nut – Lock	10
50	66–7910	Impeller	1
51	66–8010	Spacer	2

Ref. No.	Part No.	Description	No. Used
52	321–44	Screw – Hex. Hd.	2
53	74–1560	Auger Gearbox Assembly	1
54	63–2750	Auger – R.H. (Model No. 38540 Only)	1
*	63–2760	Auger – L.H. (Model No. 38540 Only)	1
*	68–7450	Auger – R.H. (Model No. 38543 Only)	1
*	68–7460	Auger – L.H. (Model No. 38543 Only)	1
55	25–5090	Spacer – Auger Hub	2
56	20–0990	Flange – Bearing (Inner)	2
57	20–0980	Bearing – Auger	2
58	20–1000	Flange – Bearing (Outer)	2
59	17–7030	Bolt – Auger	2
60	321–3	Screw – Hex Hd.	8
*	12–8789	Impeller Bearing Assembly (Incl. Ref. #38–40)	1

*Not Illustrated

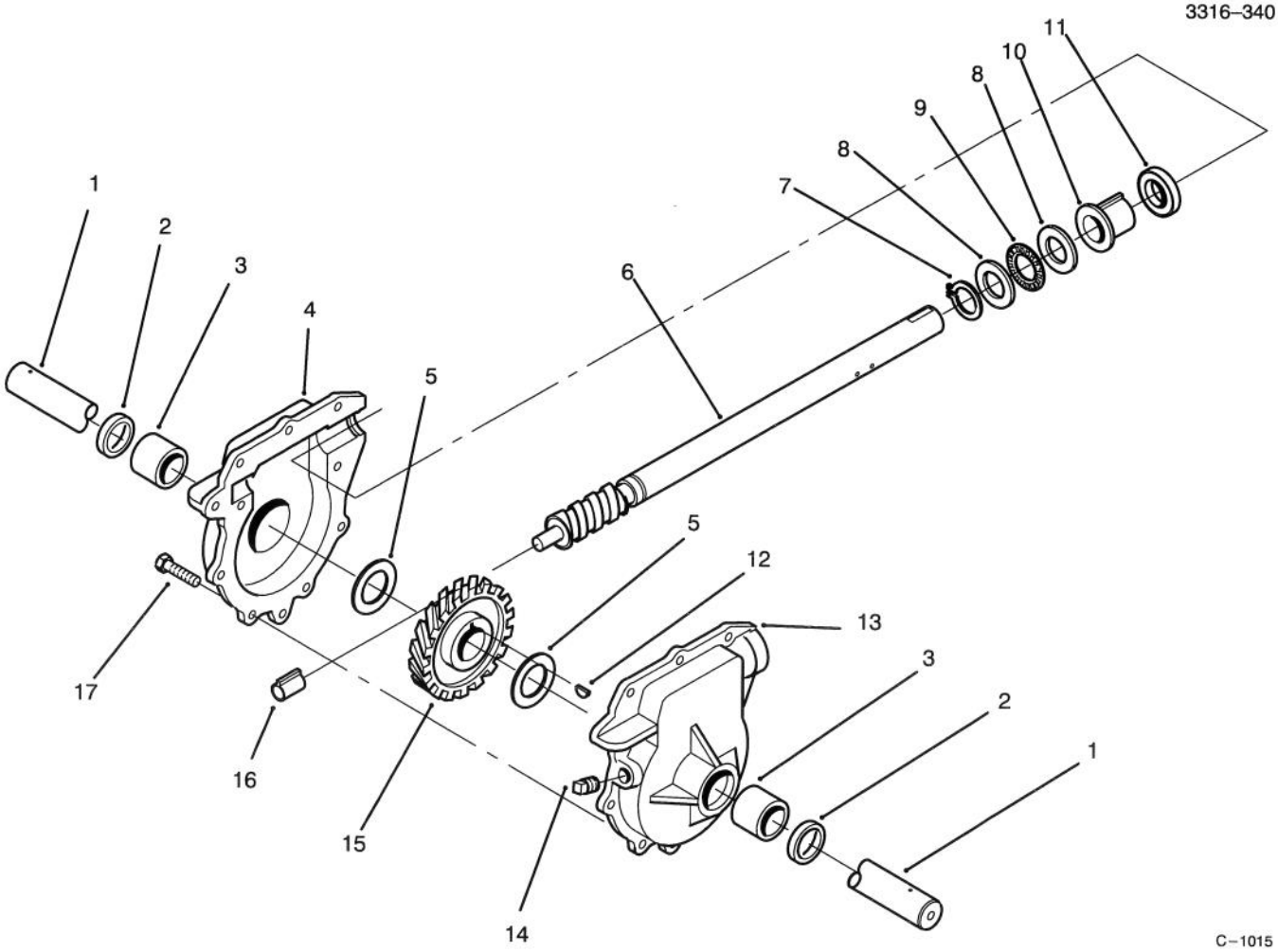

24" AUGER GEARCASE ASSEMBLY NO. 74–1560

Ref. No.	Part No.	Description	No. Used
1	62–1530	Shaft – Auger (24")	1
2	7–0045	Seal – Oil	2
3	256–237	Bushing – Sleeve	2
4	74–1580	Gearcase Assembly – R.H. (Incl. Ref. # 2–3)	2
5	252–71	Bearing – Thrust	2
6	66–7811	Shaft – Impeller	1
7	32151–33	Ring – Snap	1
8	252–78	Washer – Thrust	2
9	252–76	Bearing – Thrust	1

Ref. No.	Part No.	Description	No. Used
10	37–6560	Bushing – Input	1
11	253–149	Seal – Input	1
12	3257–10	Key – Woodruff	1
13	74–1570	Gearcase Assembly – L.H. (Incl. Ref. # 2–3, & 17)	1
14	281–1	Plug – Pipe Sq. Hd.	1
15	62–0120	Gear – Helical	1
16	62–1150	Bushing – Worm	1
17	32144–110	Screw – Hex Washer Hd.	9
*	505–129	Sealant – 100g Tube	1

*Not Illustrated

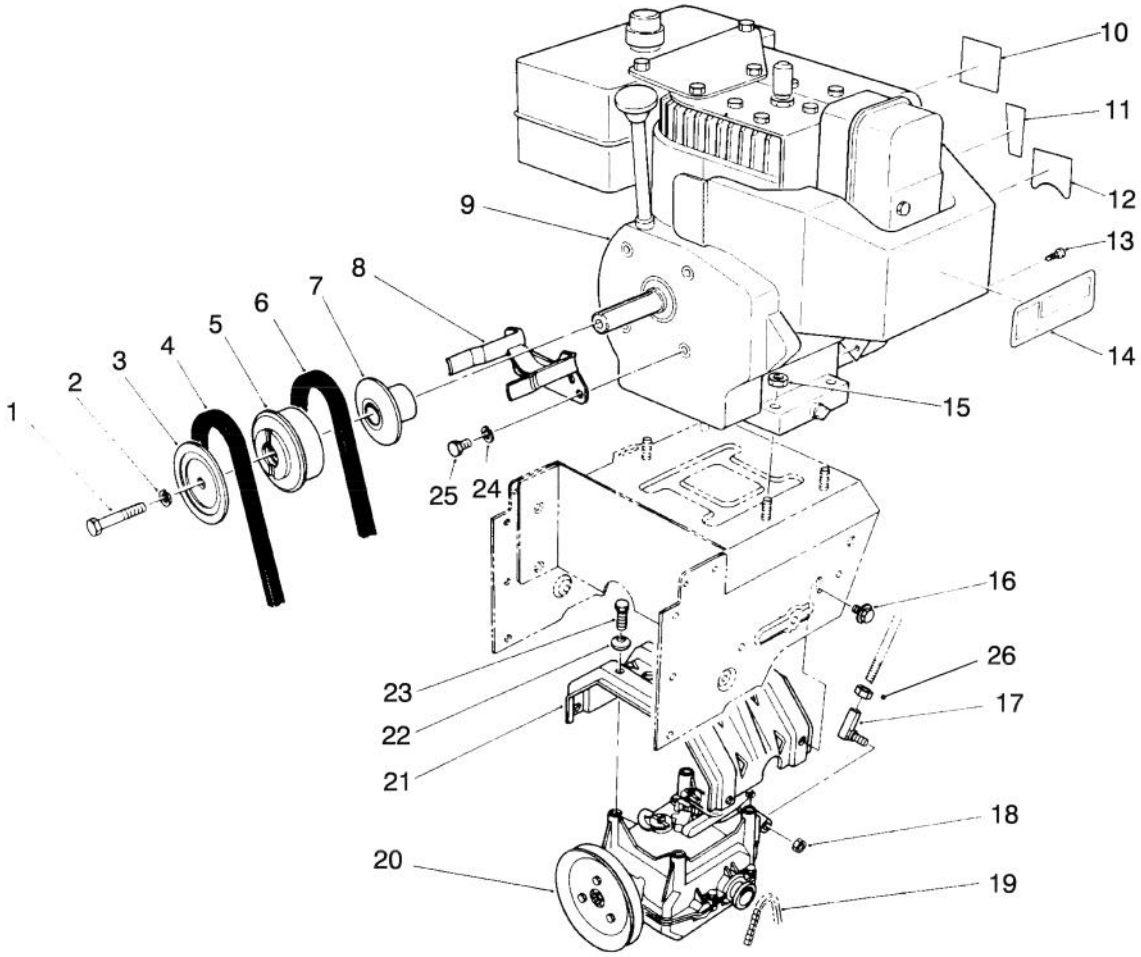

C–1727

ENGINE ASSEMBLY

Ref. No.	Part No.	Description	No. Used
1	3212–8	Screw – Hex. Hd.	1
2	3253–6	Washer – Lock	1
3	62–0940	Sheave Half – Impeller	1
4	63–2961	Belt – Impeller	1
5	63–0930	Hub – Sheave	1
6	63–2951	Belt – Traction	1
7	62–0920	Sheave Half – Traction	1
8	68–7510	Guide – Belt	1
†9		Engine	1
10	62–5760	Decal – Primer	1
11	63–3190	Decal – Throttle	1
12	63–2400	Decal – Choke (Model No. 38540 Only)	1
*	63–2410	Decal – Choke (Model No. 38543 Only)	1
13	32144–4	Screw	1

Ref. No.	Part No.	Description	No. Used
14	66–6840	Decal – Hot Surface (Model No. 38540 Only)	1
*	63–2310	Decal – Hot Surface (Model No. 38543 Only)	1
15	32128–20	Nut – Lock	4
16	3234–7	Screw – Hex Flange Hd.	4
17	63–2640	Joint– Ball	1
18	3296–39	Nut – Lock	1
19	63–2940	Chain – Drive	1
20	66–8030	Transmission Assembly	1
21	63–2990	Frame – Transmission	1
22	3290–461	Washer – Belleville	4
23	11–0590	Screw – Cap Hex Hd.	4
24	3253–4	Washer – Lock	2
25	3210–1	Screw – Hex Hd.	2
26	3220–3	Nut – Jam	1

*Not Illustrated
†Obtain from your local Tecumseh Dealer.

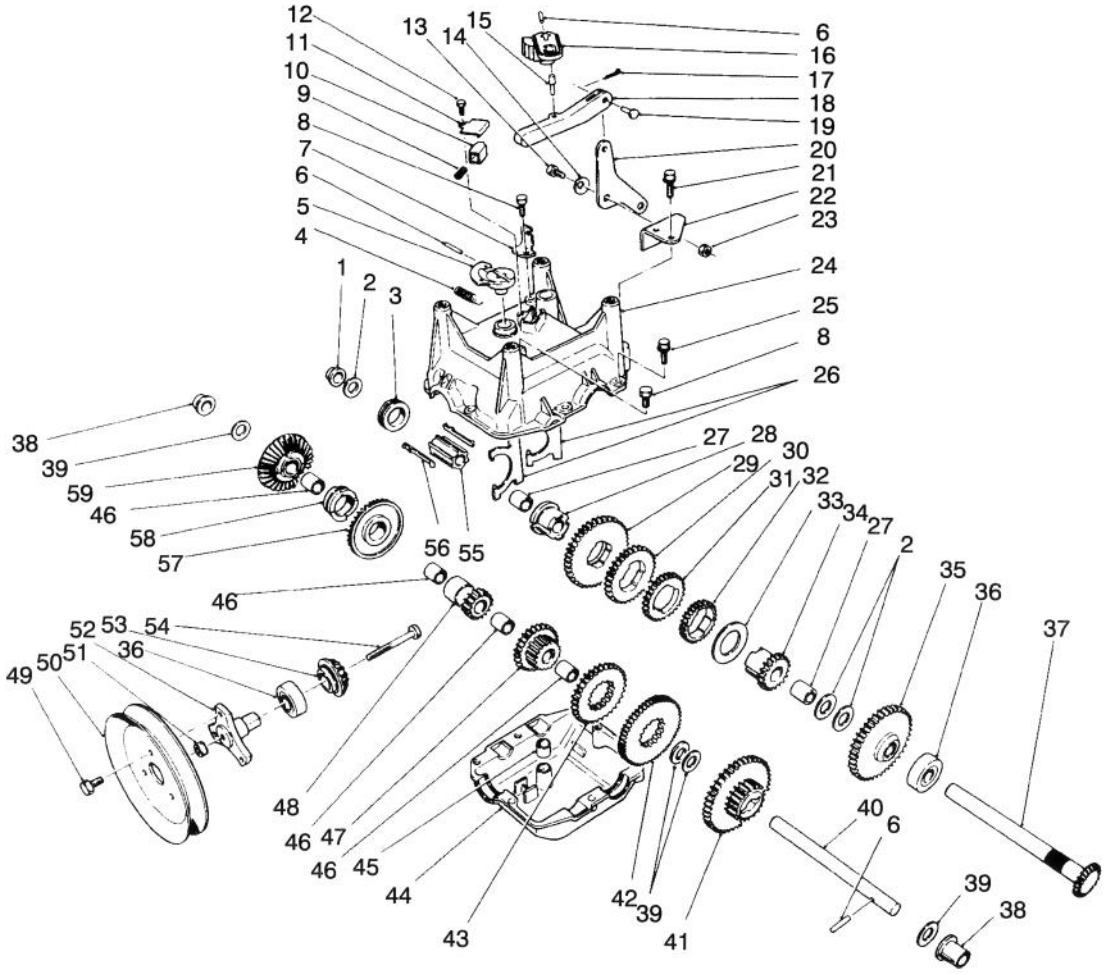

TRANSMISSION ASSEMBLY NO. 66–8030

Ref. No.	Part No.	Description	No. Used
1	62–1180	Bushing – Output (Flange)	1
2	252–59	Washer – Thrust	3
3	62–0430	Collar – Shift (Speed)	1
4	63–2920	Spring – Extension (F/R Return)	1
5	62–0880	Lever – Direction Shift	1
6	32121–106	Pin – Coil	3
7	62–1740	Bracket – Cable	1
8	32144–4	Screw – Self Tapping	2
9	63–2890	Spring – Compression (Detent)	1
10	62–1020	Button – Detent	1
11	62–1690	Cover – Detent	1
12	32104–71	Screw – Pan Hd.	1
13	63–3410	Bolt – Shoulder	1
14	3290–477	Washer – Curved	1
15	63–2190	Pin – Gearshift Link	1
16	62–0870	Lever – Gear Shift	1
17	3272–1	Pin – Cotter	1
18	62–0860	Link – Gearshift	1
19	283–3	Pin – Clevis	1
20	63–2600	Bellcrank	1
21	32104–95	Screw – Hex Washer Hd.	2

Ref. No.	Part No.	Description	No. Used
22	62–1190	Bracket – Bellcrank	1
23	3296–42	Nut – Lock	1
24	62–0490	Gear Case – Upper	1
25	32144–86	Screw – Hex Washer Hd.	6
26	62–1040	Yoke–Shift	2
27	62–1350	Bushing – Output	2
28	62–0320	Sleeve	1
29	62–0240	Gear – 45T	1
30	62–0220	Gear – 34T	1
31	62–0200	Gear – 27T	1
32	62–0250	Gear – 29T	1
33	63–2280	Washer – Thrust	1
34	62–0340	Sleeve – Gear 19T	1
35	62–0370	Gear – 41T	1
36	38–7820	Bearing – Ball	2
37	62–1080	Shaft – Output	1
38	62–1170	Bushing – Flange	2
39	257–10	Washer – Thrust	4
40	62–0330	Shaft – Intermediate	1
41	62–0360	Gear – Compound 19T/41T	1
42	62–0260	Gear – 51T	1
43	62–0210	Gear – 33T	1
44	62–0480	Gear Case – Lower	1

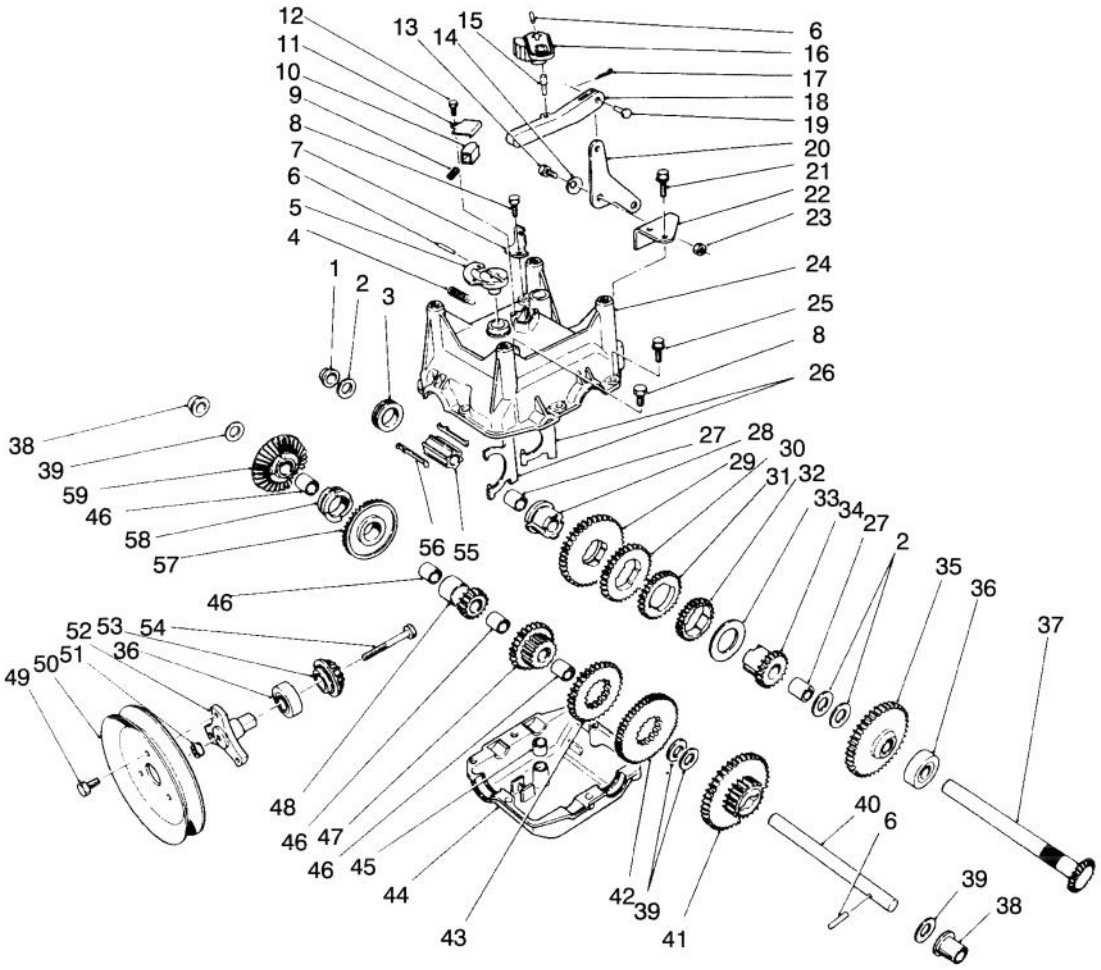

TRANSMISSION ASSEMBLY NO. 66–8030 (Continued)

Ref. No.	Part No.	Description	No. Used
45	29–9570	Bushing – Yoke	1
46	62–1160	Bushing – Intermediate	4
47	68–4310	Gear – 26T	1
48	62–0500	Gear – 15T	1
49	12–3270	Screw	3
50	62–1310	Pulley – Traction	1
51	32128–32	Nut – Flange Lock	1
52	62–0380	Hub – Pulley	1
53	62–0350	Pinion – Bevel 19T	1

Ref. No.	Part No.	Description	No. Used
54	321–15	Screw – Hex Hd.	1
55	68–4320	Sleeve – Shift	1
56	62–0310	Key – Shift	2
57	67–5870	Gear – Bevel 36T	1
58	67–5880	Collar – Shift	1
59	13–3559	Gear – Bevel Reverse 36T (Incl. Ref. #46)	1
*	505–101	Grease – 14.5 oz. Cartridge	1

*Not Illustrated

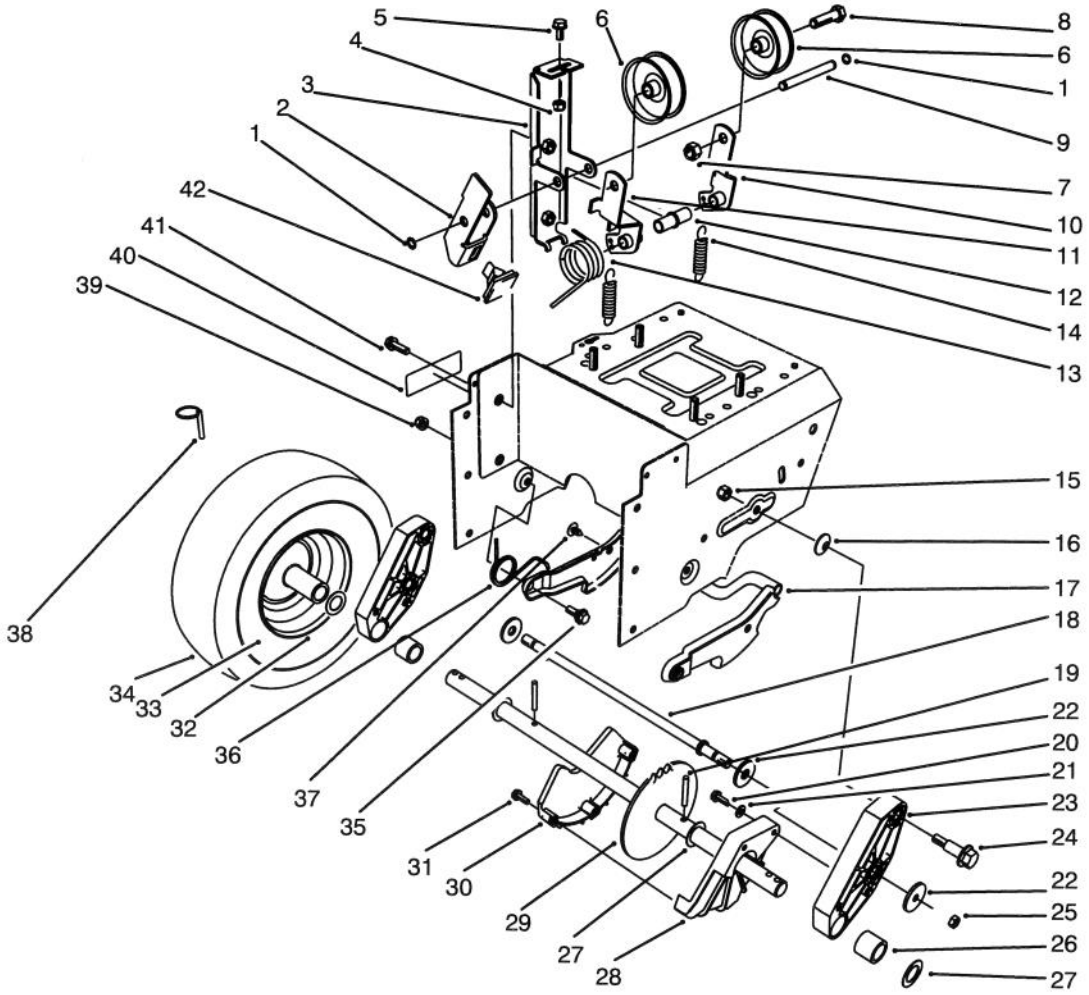

C–0053

TRACTION DRIVE ASSEMBLY

Ref. No.	Part No.	Description	No. Used
1	32120–46	Ring – Retaining	2
2	63–2810	Arm – Brake	1
3	63–2850	Bracket – Idler Arm	1
4	3296–42	Nut – Lock	1
5	3234–13	Screw – Hex. Washer Hd.	1
6	3–4244	Pulley – Idler	2
7	3296–59	Nut – Lock	2
8	323–7	Screw – Hex Hd.	2
9	62–0970	Pin – Idler	1
10	62–1260	Arm – Traction Idler	1
11	62–1280	Arm – Impeller Idler	1
12	62–1210	Bushing – Idler	1
13	63–2880	Spring – Torsion	1
14	63–2870	Spring – Extension	2
15	3296–39	Nut – Lock	2
16	3290–461	Washer – Belleville	2
17	62–0470	Latch – Arm	1
18	66–7720	Rod – Latch	1
19	32121–9	Pin – Roll	2
20	32144–4	Screw – Hex Flange Hd.	2
21	3256–1	Washer – Flat	2
22	63–3340	Washer	4
23	66–7740	Pivot Arm Assembly (Incl. Ref. # 26)	2

Ref. No.	Part No.	Description	No. Used
24	62–1330	Bolt – Shoulder	2
25	3296–23	Nut – Lock	2
26	63–2250	Bushing – Axle	2
27	252–80	Washer – Thrust	4
28	62–1010	Guard – Chain L.H.	1
29	63–2111	Axle Assembly	1
30	62–1000	Guard – Chain R.H.	1
31	32104–121	Screw – Hex Flange Hd.	3
32	241–128	Rim – Wheel	2
33	232–46	Tube – Inner	2
34	231–120	Tire	2
35	5–2490	Bolt – Shoulder	2
36	63–2740	Spring – Torsion	1
37	3290–476	Fastener – Panel	1
38	3290–243	Pin – Klik	2
39	3296–47	Nut – Lock	2
40	66–6860	Decal – Warning (Model No. 38540 Only)	1
*	63–3470	Decal – Warning (Model No. 38543 Only)	1
41	3234–7	Screw – Hex Flange Hd.	2
42	66–8060	Pad – Brake	1
*		Wheel & Tire Assembly (Incl. Ref. #32–34)	1

*Not Illustrated

3316–340

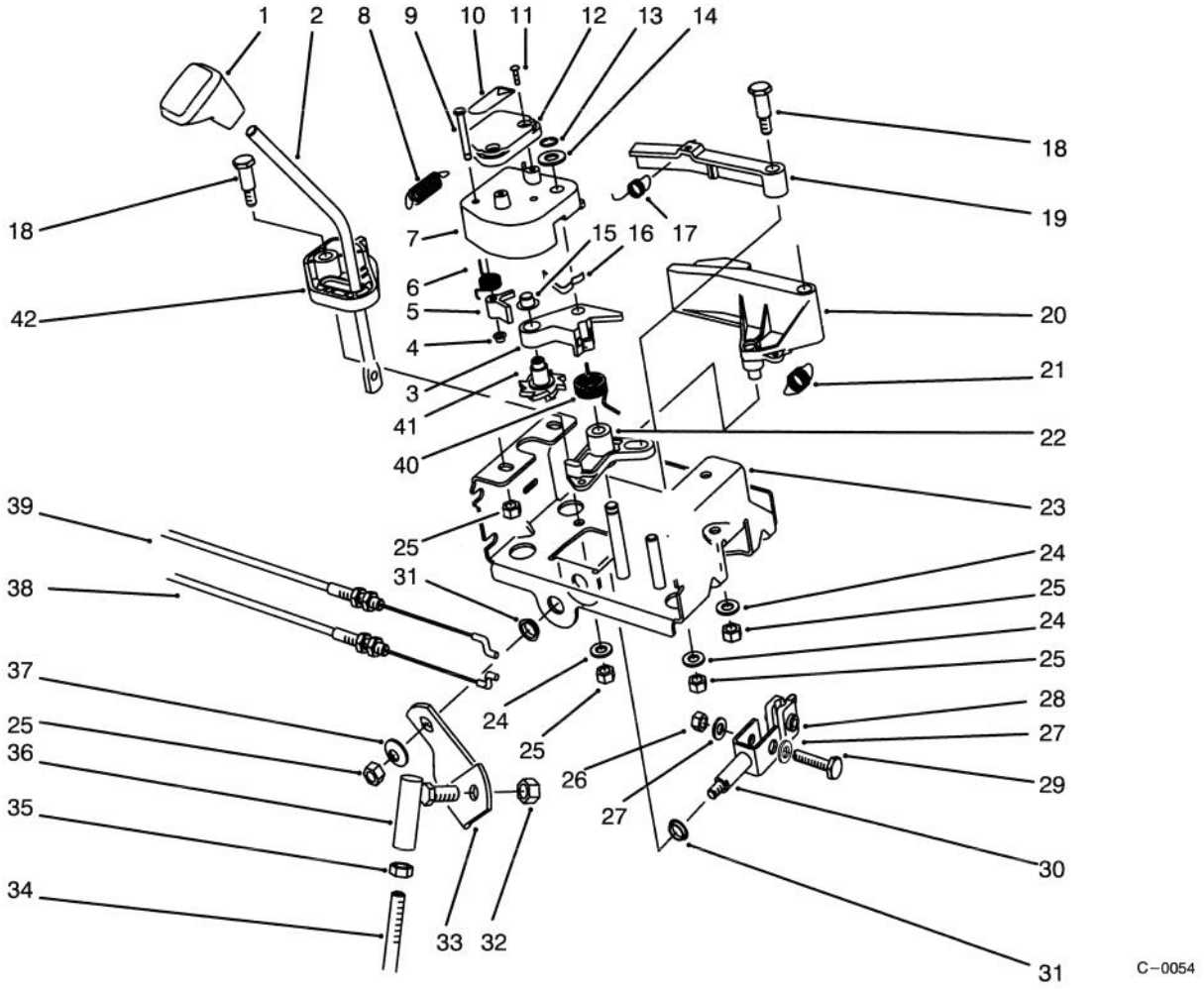

TRACTION LINKAGE ASSEMBLY

Ref. No.	Part No.	Description	No. Used
1	62–1290	Knob – Shift	1
2	67–9240	Rod – Shift (Upper)	1
3	62–1110	Lever – Index Wheel	1
4	3290–422	Nut – Push	1
5	62–0180	Tang – Index	1
6	62–1650	Spring – Torsion	1
7	62–1100	Lever – Latch	1
8	63–2220	Spring – Extension	1
9	63–2610	Pin – Tang	1
10	63–2480	Decal – #2	1
11	32104–118	Screw – Pan Hd.	2
12	62–1140	Cover – Latch	1
13	32120–46	Ring – Retaining	1
14	257–9	Washer – Thrust	1
15	3290–320	Nut – Push	1
16	62–1710	Spring – Flat	1
17	63–2240	Spring – Extension	1
18	63–2650	Screw – Shoulder	2
19	62–1700	Lever – Lockout	1
20	62–1130	Lever – Reverse	1
21	63–2230	Spring – Extension	1

Ref. No.	Part No.	Description	No. Used
22	62–1120	Lever – Reverse	1
23	63–2150	Frame – Control	1
24	3256–23	Washer – Flat	3
25	3296–29	Nut – Lock	7
26	3296–42	Nut – Lock	1
27	3256–1	Washer – Flat	2
28	67–9250	Retainer – Shift Rod	1
29	321–9	Screw – Cap Hex. Hd.	1
30	66–7730	Clevis	1
31	256–296	Bushing – Nyliner	2
32	3296–39	Nut – Lock	1
33	63–2630	Bracket – Shift	1
34	63–2830	Rod – Shift (Lower)	1
35	3220–3	Nut – Jam	1
36	63–2640	Joint – Ball	1
37	3290–456	Washer – Belleville	1
38	63–2210	Cable – Gearbox	1
39	63–2200	Cable – Latch	1
40	63–2270	Spring – Torsion	1
41	62–0170	Wheel – Index	1
42	62–1470	Base – Lockout	1

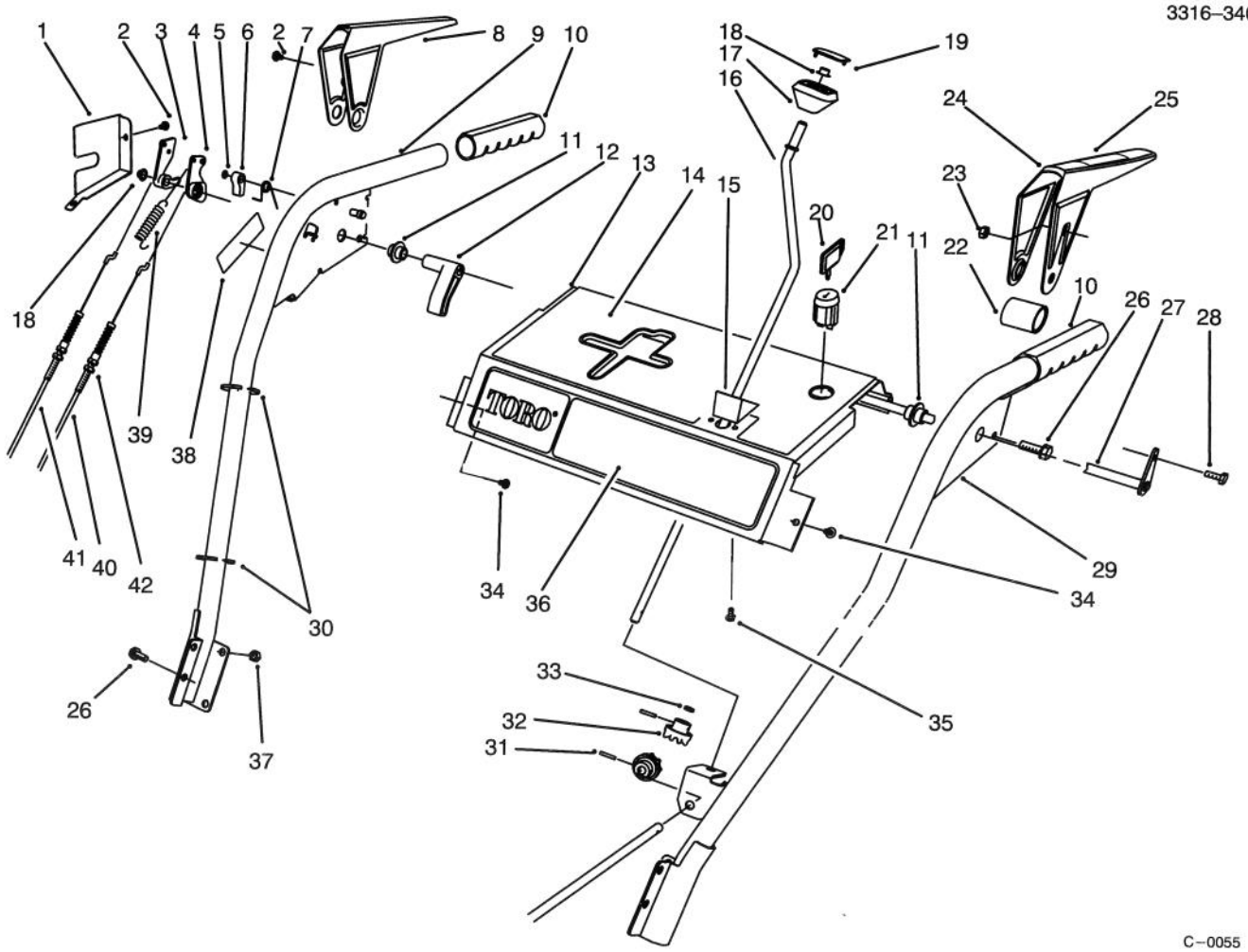

HANDLE ASSEMBLY

Ref. No.	Part No.	Description	No. Used
1	63–2170	Cover – Lever Lock	1
2	2210–250	Screw	3
3	62–0300	Tang – Locking	1
4	62–0290	Cam – Release	1
5	32151–66	Ring – Retaining	1
6	62–0280	Latch – Lock	1
7	63–2910	Spring – Torsion	1
8	62–1050	Lever – Impeller	1
9	62–1380	Handle – R.H.	1
10	66–7850	Handlegrip	2
11	62–1070	Bushing – Lever	2
12	62–1640	Lever – Trip	1
13	66–8100	Panel – Control	1
14	66–6850	Decal – Panel Top (Model No. 38540 Only)	1
*	63–2550	Decal – Panel Top (Model No. 38543 Only)	1
15	62–1490	Plate – Guide	1
16	63–2160	Rod – Chute Crank	1
17	62–1320	Knob – Chute Control	1
18	3290–320	Nut – Push	2
19	62–1520	Cover – Knob	1
20	63–8360	Key – Switch	1
21	40–5940	Switch – On/Off	1
22	63–3380	Spacer – Traction Lever	1
23	3296–2	Nut – Lock	1

Ref. No.	Part No.	Description	No. Used
24	62–1060	Lever – Traction	1
25	63–3050	Decal – Lever (Model No. 38540 Only)	1
26	3234–7	Screw – Hex Flange Hd.	6
27	63–2030	Rod – Cross	1
28	3290–359	Screw	1
29	66–8090	Handle – L.H.	1
30	3290–378	Tie – Cable	3
31	32121–50	Pin – Roll	2
32	62–1460	Gear – Universal	2
33	62–1230	Washer – Rubber	1
34	32104–76	Screw – Self Tapping	2
35	32104–118	Screw – Pan Hd.	2
36	63–2510	Decal – Panel Front	1
37	3296–47	Nut – Lock	4
38	66–6860	Decal – Warning (Model No. 38540 Only)	1
*	63–3470	Decal – Warning (Model No. 38543 Only)	1
39	88–0810	Spring – Extension	1
40	63–2710	Cable – Traction	1
41	63–2700	Cable – Impeller	1
42	3296–42	Nut Lock	4
*	63–3420	Harness – Wire	1
*	12–8949	Loose Parts	1

*Not Illustrated

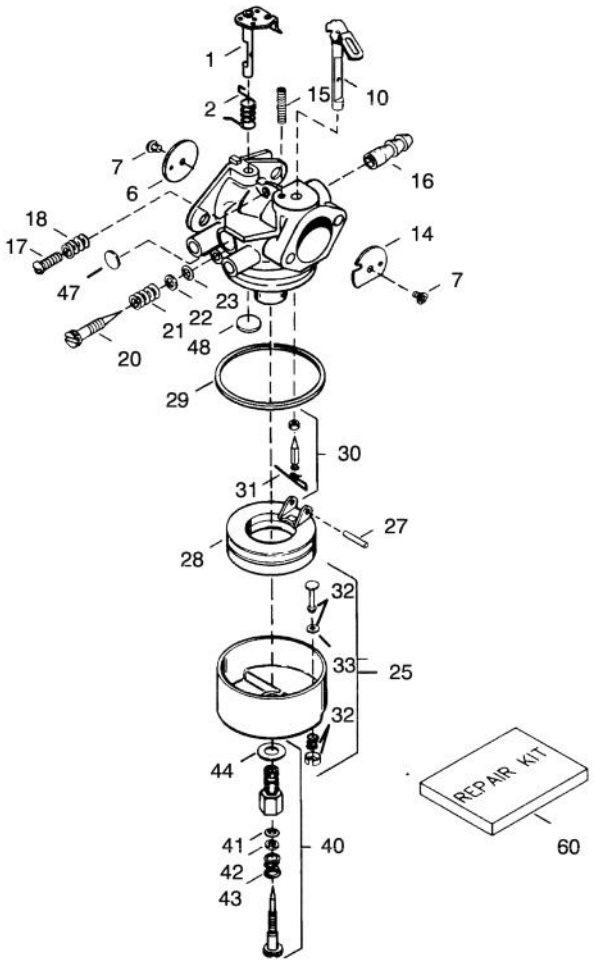

C–1744

CARBURETOR TECUMSEH NO. 632334A

Ref. No.	Part No.	Description	No. Used
1	631776A	Shaft/Lever – Throttle	1
2	631970	Spring – Throttle Return	1
6	631778	Shutter – Throttle	1
7	650506	Screw – Shutter	2
10	632112	Shaft/Lever – Choke	1
14	632174	Shutter – Choke	1
15	630735	Spring – Choke Positioning	1
16	632164	Fitting – Fuel Inlet	1
17	650417	Screw – Idle Regulating	1
21	630766	Spring – Regulating Screw	1
22	630739	Washer – Flat	1
*23	630740	O–Ring – Adj. Screw	1
*24	632281	Screw – Idle Adjustment	1
25	631951	Float Bowl Assembly (Incl. Ref. #32 & 33)	1
*27	631024	Shaft – Float	1
28	632019	Float – Carburetor	1

Ref. No.	Part No.	Description	No. Used
*29	631028	Gasket – Bowl to Body	1
*30	631021	Inlet Needle, Seat & Clip Assy. (Incl. Ref. #31)	1
31	631022	Clip – Inlet Needle	1
32	27136A	Drain Assembly (Incl. Ref. #33)	1
33	27554	Gasket – Bowl Drain	1
*40	632239	Adjustment Screw Assy. (Incl. Ref. #43, 44, 41 & 42)	1
41	630740	O–Ring – Adj. Screw	1
42	630739	Washer – Adj. Screw	1
43	630738	Spring – Adjustment Screw	1
44	27110	Gasket – Bowl to Body	1
*47	630748	Plug – Welch	1
*48	631027	Plug – Welch	1
60	632347	Kit – Repair	1

*Included in Repair Kit Ref. #60.

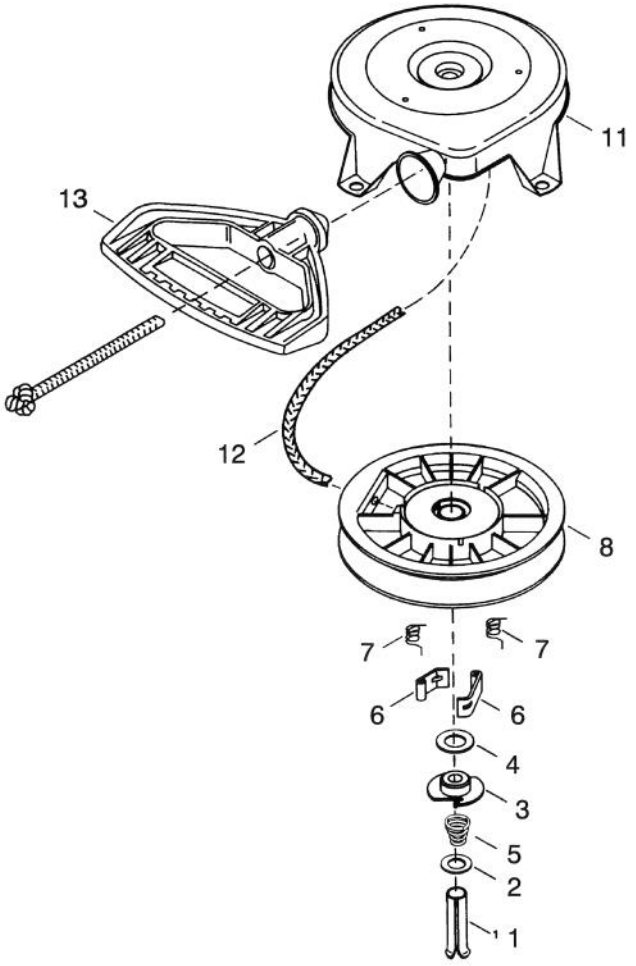

C–1745

REWIND STARTER TECUMSEH NO. 590672

Ref. No.	Part No.	Description	No. Used
1	590599A	Pin – Spring (Incl. Ref. #4)	1
2	590600	Washer	1
3	590679	Retainer	1
4	590601	Washer	1
5	590678	Spring – Brake	1
6	590680	Dog – Starter	2

Ref. No.	Part No.	Description	No. Used
7	590412	Spring – Dog	2
8	590682	Pulley & Rewind Spring Assembly	1
11	590684	Starter Housing Ass'y	1
12	590456	Rope – Starter	1
‡13	590574	Handle – Mitten Grip	1

‡Not Included in Starter Assembly.

ENGINE TECUMSEH MODEL NO. HM80–155337S

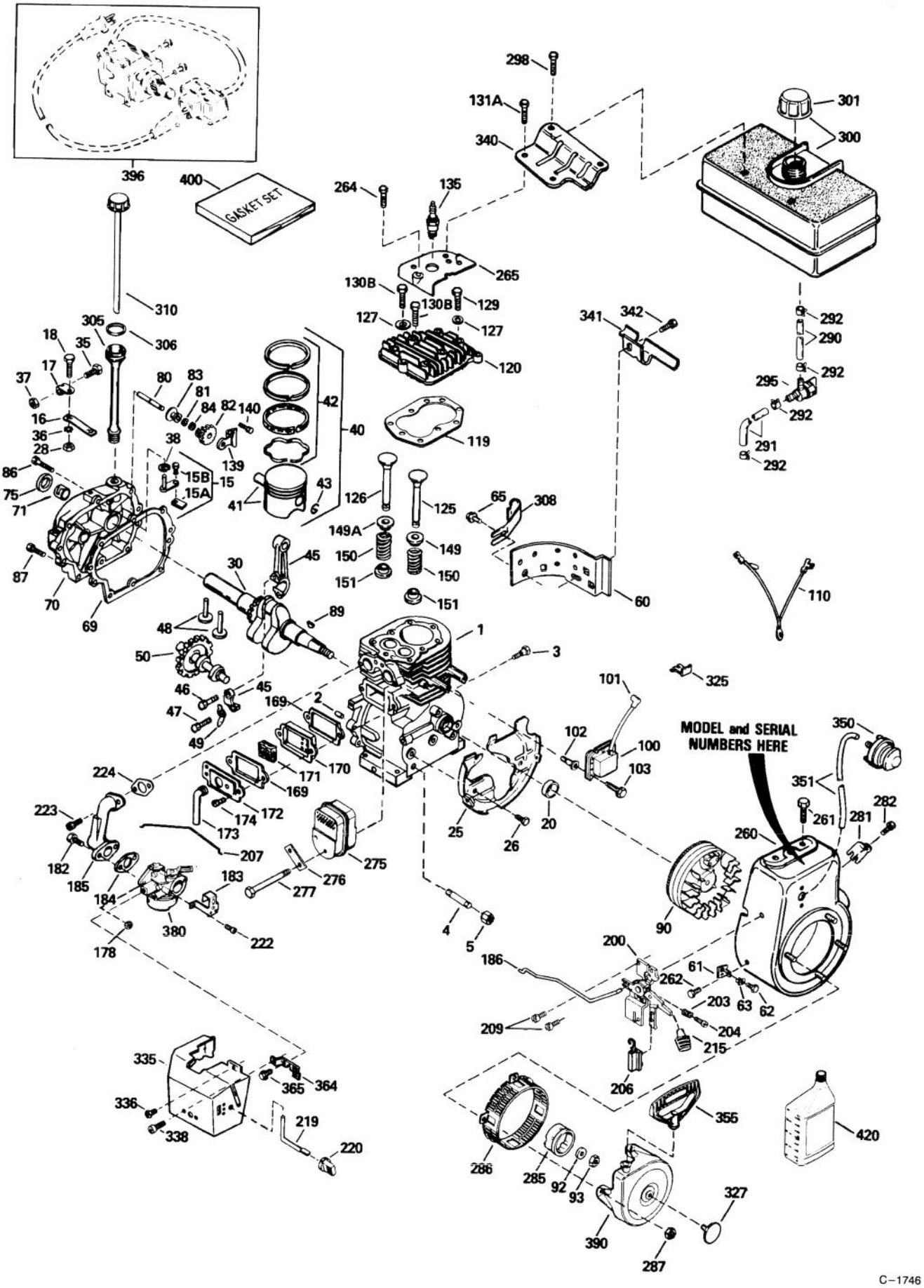

ENGINE TECUMSEH MODEL NO. HM80–155337S

Ref. No.	Part No.	Description	No. Used
1	35385	Cylinder Ass'y (Incl. Ref. #2, 20, & 72)	1
2	27652	Dowel Pin	2
3	650820	Screw	2
4	34171	Oil Drain Extension	1
5	30969	Extension Cap	1
15	30699C	Governor (Incl. Ref. #15A & 15B)	1
15A	30700	Governor Yoke	1
15B	650494	Screw	1
16	33454	Governor Lever	1
17	29916	Governor Lever Clamp	1
18	650548	Screw	1
20	35319	Oil Seal	1
25	35326	Blower Housing Baffle	1
26	650561	Screw	2
28	30322	Lock Nut	1
30	35571A	Crankshaft	1
35	29826	Screw	1
36	29918	Lock Washer	1
37	29216	Lock Nut	1
38	29642	Retaining Ring	1
40	34553	Piston, Pin & Ring Set (.010" OS)	1
40	34552	Piston, Pin & Ring Set (Std.)	1
40	34554	Piston , Pin & Ring Set (.020" OS)	1
41	34331A	Piston & Pin Ass'y (.020" OS) (Incl. Ref. #43)	1
41	34330A	Piston & Pin Ass'y (.010" OS) (Incl. Ref. #43)	1
41	34329A	Piston & Pin Ass'y (Std.) (Incl. Ref. #43)	1
42	34332	Ring Set (Std.)	1
42	34334	Ring Set (.020" OS)	1
42	34333	Ring Set (.010" OS)	1
43	27888	Piston Pin Retaining Ring	2
45	35373A	Connecting Rod Ass'y (Incl. Ref. #46, 47, & 49)	1
46	650908	Connecting Rod Bolt	1
47	650882	Connecting Rod Bolt	1
48	34034	Valve Lifter	2
49	35374	Oil Dipper	1
50	35375	Camshaft (MCR)	1
60	33273A	Blower Housing Extension	1
61	34126	Grommet Mounting Bracket	1
62	650760	Screw	1
63	28545	Grommet	1
65	650128	Screw	1
*69	35262	Cylinder Cover Gasket	1
70	35376	Cylinder Cover (Incl. Ref. #71, 75, & 80)	1
71	35377	Crankshaft Bushing	1

Ref. No.	Part No.	Description	No. Used
75	35319	Oil Seal	1
80	31845	Governor shaft	1
81	30590A	Washer	1
82	35378	Governor Gear Ass'y (Incl. Ref. #81)	1
83	30588A	Governor Spool	1
84	29193	Retaining Ring	1
86	650833	Screw	7
87	650832	Screw	1
89	32589	Flywheel Key	1
90	611091	Flywheel (W/Ring Gear)	1
92	650880	Lock Washer	1
93	650881	Flywheel Nut	1
100	35135	Solid State Ignition	1
101	610118	Spark Plug Cover	1
102	650872	Solid State Mounting Stud	2
103	650814	Screw, Torx T–15	2
110	35253	Ground Wire	1
*119	36448	Cylinder Head Gasket	1
120	36449	Cylinder Head	1
125	27878A	Exhaust Valve (Std.) (Incl. Ref. #151)	1
125	27880A	Exhaust valve (1/32" OS) (Incl. Ref. #151)	1
126	34035	Intake Valve (Std.) (Incl. Ref. #151)	1
126	34036	Intake Valve (1/32" OS) (Incl. Ref. #151)	1
127	650691	Washer	2
129	650727	Screw	2
130B	6021A	Screw	7
131A	650713	Screw	2
135	35395	Resistor Spark Plug (RJ19LM)	1
139	33369	Governor Gear Bracket	1
140	650836	Screw	2
149	27882	Valve Spring Cap	1
149A	35862	Valve Spring Cap	1
150	27881	Valve Spring	2
151	32581	Valve Spring Keeper	2
*169	27896A	Valve Cover Gasket	2
170	28423	Breather Body	1
171	28424	Breather Element	1
172	28425	Valve Cover	1
173	35350	Breather Tube	1
174	650128	Screw	2
178	29752	Nut & Lock Washer	2
182	30088A	Screw	2
183	34587	Choke Bracket	1
*184	33263	Carburetor To Intake Pipe Gasket	1
185	33877	Intake Pipe	1
186	34667	Governor Link	1
200	34677	Control Bracket (Incl. Ref. 203 & 204)	1

*Included in Gasket Set 36450

ENGINE TECUMSEH MODEL NO. HM80–155337S (Cont.)

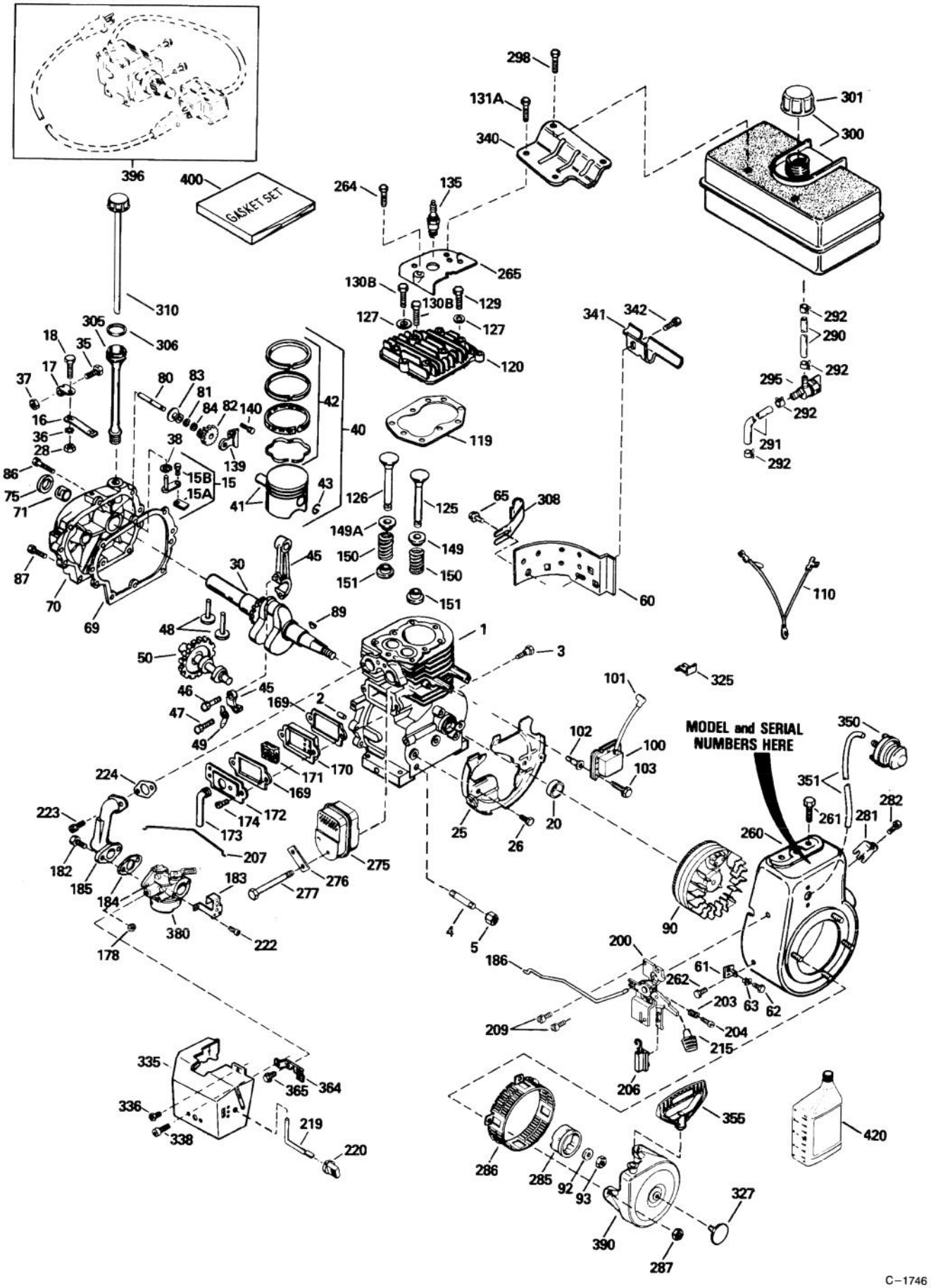

ENGINE TECUMSEH MODEL NO. HM80–155337S (Cont.)

Ref. No.	Part No.	Description	No. Used
203	31342	Compression Spring	1
204	650549	Screw	1
206	610973	Terminal	1
207	33878	Throttle Link	1
209	650821	Screw	2
215	35440	Control Knob	1
219	34586	Choke rod	1
220	35438	Choke Knob	2
222	28820	Screw	2
223	650378	Screw, Torx T–30	2
*224	27915A	Intake Pipe Gasket	1
260	35447A	Blower Housing	1
261	650788	Screw	2
262	29747B	Screw, Torx T–40	2
264	650802	Screw	1
265	33272B	Cylinder Head Cover	1
275	35056	Muffler	1
276	31588	Locking Plate	1
277	792093	Screw	2
281	33013	Starter bubble Cover	1
282	650760	Screw	1
285	35985A	Starter Cup	1
286	35446	Starter Screen	1
287	29752	Nut & Lock Washer	4
290	29774	Fuel Line	1
291	30705	Fuel Line	1
292	26460	Fuel Line Clamp	4
295	35857	Fuel shut–Off Valve	1
298	650665	Screw	2

Ref. No.	Part No.	Description	No. Used
300	34156A	Fuel Tank (Incl. Ref. #292 & 301)	1
301	35355	Fuel Cap	1
305	35554	Oil fill Tube	1
306	35499	"O" Ring	1
308	35540	Fill Tube Clip	1
310	36205	Dipstick	1
325	29443	Wire Clip	1
327	35392	Starter Plug	1
335	35057A	Carburetor Cover	1
336	650765	Screw	1
338	28942	Screw	2
340	34155	Fuel Tank Bracket	1
341	34154	Fuel Tank Bracket	1
342	650561	Screw	1
350	570682	Primer Bulb	1
351	32180C	Primer Line	1
355	590574	Starter Handle	1
364	33377	Carburetor Cover Bracket	1
365	650767	Screw	2
380	632334A	Carburetor (Incl. Ref. #184)	1
390	590672	Rewind Starter	1
396	33329D	Electric Starter Motor (Optional)	1
400	36450	Gasket Set	1
420	730226	SAE 5W30 4–Cycle Eng. Oil (Quart)	1

*Included in Gasket Set 36450

TORO PART NUMBER INDEX

Part No.	Description	Pg. No.	Ref. No.	Qty.
3–0750	Washer – Retaining	1	2	2
3–4244	Pulley – Idler	7	6	2
5–2490	Bolt – Shoulder	7	35	2
7–0045	Seal – Oil	3	2	2
11–0590	Screw – Cap Hex Hd.	4	23	4
12–3270	Screw	6	49	3
12–8789	Impeller Bearing Assembly	2	*	1
12–8949	Loose Parts	9	*	1
13–3559	Gear – Bevel Reverse 36T	6	59	1
17–7030	Bolt – Auger	2	59	2
20–0980	Bearing – Auger	2	57	2
20–0990	Flange – Bearing (Inner)	2	56	2
20–1000	Flange – Bearing (Outer)	2	58	2
25–5090	Spacer – Auger Hub	2	55	2
29–9570	Bushing – Yoke	6	45	1
37–6560	Bushing – Input	3	10	1
38–7820	Bearing – Ball	5	36	2
40–5940	Switch – On/Off	9	21	1
52–2861	Washer	2	43	4
53–7660	Decal – Danger Chute	1	*	1
53–7670	Decal – Danger Auger	1	5	1
62–0120	Gear – Helical	3	15	1
62–0170	Wheel – Index	8	41	1
62–0180	Tang – Index	8	5	1
62–0200	Gear – 27T	5	31	1
62–0210	Gear – 33T	5	43	1
62–0220	Gear – 34T	5	30	1
62–0240	Gear – 45T	5	29	1
62–0250	Gear – 29T	5	32	1
62–0260	Gear – 51T	5	42	1
62–0280	Latch – Lock	9	6	1
62–0290	Cam – Release	9	4	1
62–0300	Tang – Locking	9	3	1
62–0310	Key – Shift	6	56	2
62–0320	Sleeve	5	28	1
62–0330	Shaft – Intermediate	5	40	1
62–0340	Sleeve – Gear 19T	5	34	1
62–0350	Pinion – Bevel 19T	6	53	1
62–0360	Gear – Compound 19T/41T	5	41	1
62–0370	Gear – 41T	5	35	1
62–0380	Hub – Pulley	6	52	1
62–0430	Collar – Shift (Speed)	5	3	1
62–0470	Latch – Arm	7	17	1
62–0480	Gear Case – Lower	5	44	1
62–0490	Gear Case – Upper	5	24	1
62–0500	Gear – 15T	6	48	1
62–0720	Housing – 24	1	6	1
62–0820	Gear – Worm	1	22	1
62–0840	Chute Assembly	1	19	1
62–0860	Link – Gearshift	5	18	1
62–0870	Lever – Gear Shift	5	16	1
62–0880	Lever – Direction Shift	5	5	1
62–0920	Sheave Half – Traction	4	7	1
62–0940	Sheave Half – Impeller	4	3	1
62–0970	Pin – Idler	7	9	1
62–1000	Guard – Chain R.H.	7	30	1
62–1010	Guard – Chain L.H.	7	28	1
62–1020	Button – Detent	5	10	1
62–1040	Yoke–Shift	5	26	2
62–1050	Lever – Impeller	9	8	1
62–1060	Lever – Traction	9	24	1
62–1070	Bushing – Lever	9	11	2
62–1080	Shaft – Output	5	37	1
62–1100	Lever – Latch	8	7	1
62–1110	Lever – Index Wheel	8	3	1
62–1120	Lever – Reverse	8	22	1
62–1130	Lever – Reverse	8	20	1
62–1140	Cover – Latch	8	12	1
62–1150	Bushing – Worm	3	16	1
62–1160	Bushing – Intermediate	6	46	4
62–1170	Bushing – Flange	5	38	2
62–1180	Bushing – Output (Flange)	5	1	1
62–1190	Bracket – Bellcrank	5	22	1
62–1210	Bushing – Idler	7	12	1
62–1230	Washer – Rubber	9	33	1
62–1260	Arm – Traction Idler	7	10	1
62–1280	Arm – Impeller Idler	7	11	1
62–1290	Knob – Shift	8	1	1
62–1300	Pulley – Impeller	1	24	1
62–1310	Pulley – Traction	6	50	1
62–1320	Knob – Chute Control	9	17	1
62–1330	Bolt – Shoulder	7	24	2
62–1350	Bushing – Output	5	27	2
62–1380	Handle – R.H.	9	9	1
62–1430	Retainer – Chute	1	11	3
62–1440	Cover – Engine Frame	1	32	1
62–1460	Gear – Universal	9	32	2
62–1470	Base – Lockout	8	42	1
62–1490	Plate – Guide	9	15	1
62–1520	Cover – Knob	9	19	1
62–1530	Shaft – Auger (24)	3	1	1
62–1640	Lever – Trip	9	12	1
62–1650	Spring – Torsion	8	6	1
62–1690	Cover – Detent	5	11	1
62–1700	Lever – Lockout	8	19	1
62–1710	Spring – Flat	8	16	1
62–1720	Rod – Chute Gear	1	23	1
62–1740	Bracket – Cable	5	7	1
62–5760	Decal – Primer	4	10	1
63–0930	Hub – Sheave	4	5	1
63–2030	Rod – Cross	9	27	1
63–2080	Cover – Belt (Upper)	1	28	1
63–2111	Axle Assembly	7	29	1
63–2150	Frame – Control	8	23	1
63–2160	Rod – Chute Crank	9	16	1
63–2170	Cover – Lever Lock	9	1	1
63–2180	Bracket – Gear	1	7	1
63–2190	Pin – Gearshift Link	5	15	1
63–2200	Cable – Latch	8	39	1
63–2210	Cable – Gearbox	8	38	1
63–2220	Spring – Extension	8	8	1
63–2230	Spring – Extension	8	21	1
63–2240	Spring – Extension	8	17	1
63–2250	Bushing – Axle	7	26	2
63–2270	Spring – Torsion	8	40	1
63–2280	Washer – Thrust	5	33	1
63–2300	Retainer – Cable	1	26	1
63–2310	Decal – Hot Surface	4	*	1
63–2400	Decal – Choke	4	12	1
63–2410	Decal – Choke	4	*	1
63–2480	Decal – #2	8	10	1
63–2510	Decal – Panel Front	9	36	1
63–2550	Decal – Panel Top	9	*	1
63–2600	Bellcrank	5	20	1
63–2610	Pin – Tang	8	9	1
63–2630	Bracket – Shift	8	33	1
63–2640	Joint – Ball	8	36	1
63–2640	Joint– Ball	4	17	1

*Not Illustrated

TORO PART NUMBER INDEX (Cont.)

Part No.	Description	Pg. No.	Ref. No.	Qty.
63–2650	Screw – Shoulder	8	18	2
63–2670	Plate – Chute Retainer	1	10	3
63–2700	Cable – Impeller	9	41	1
63–2710	Cable – Traction	9	40	1
63–2740	Spring – Torsion	7	36	1
63–2750	Auger – R.H.	2	54	1
63–2760	Auger – L.H.	2	*	1
63–2810	Arm – Brake	7	2	1
63–2830	Rod – Shift (Lower)	8	34	1
63–2850	Bracket – Idler Arm	7	3	1
63–2870	Spring – Extension	7	14	2
63–2880	Spring – Torsion	7	13	1
63–2890	Spring – Compression	5	9	1
63–2900	Washer – Plastic	1	17	2
63–2910	Spring – Torsion	9	7	1
63–2920	Spring – Extension	5	4	1
63–2940	Chain – Drive	4	19	1
63–2951	Belt – Traction	4	6	1
63–2961	Belt – Impeller	4	4	1
63–2990	Frame – Transmission	4	21	1
63–3020	Guard – Chute	1	14	1
63–3050	Decal – Lever	9	25	1
63–3130	Clip – Chute Guard	1	12	1
63–3190	Decal – Throttle	4	11	1
63–3290	Cover – Cable	1	29	1
63–3340	Washer	7	22	4
63–3380	Spacer – Traction Lever	9	22	1
63–3410	Bolt – Shoulder	5	13	1
63–3420	Harness – Wire	9	*	1
63–3450	Bearing – Impeller	2	39	1
63–3470	Decal – Warning	7	*	1
63–3470	Decal – Warning	9	*	1
63–3740	Decal – Danger Chute	1	20	1
63–8360	Key – Switch	9	20	1
66–6840	Decal – Hot Surface	4	14	1
66–6850	Decal – Panel Top	9	14	1
66–6860	Decal – Warning	9	38	1
66–6860	Decal – Warning	7	40	1
66–6980	Frame – Engine	1	31	1
66–7720	Rod – Latch	7	18	1
66–7730	Clevis	8	30	1
66–7740	Pivot Arm Assembly	7	23	2
66–7762	Blade – Scraper	2	45	1
66–7811	Shaft – Impeller	3	6	1
66–7821	Plate – Side R.H.	1	3	1
66–7831	Plate – Side L.H.	2	46	1
66–7850	Handlegrip	9	10	2
66–7910	Impeller	2	50	1
66–8010	Spacer	2	51	2
66–8030	Transmission Assembly	4	20	1
66–8060	Pad – Brake	7	42	1
66–8090	Handle – L.H.	9	29	1
66–8100	Panel – Control	9	13	1
67–5870	Gear – Bevel 36T	6	57	1
67–5880	Collar – Shift	6	58	1
67–9240	Rod – Shift (Upper)	8	2	1
67–9250	Retainer – Shift Rod	8	28	1
68–4100	Plate – Engine Stud R.H.	2	*	1
68–4110	Plate – Engine Stud L.H.	2	34	1
68–4310	Gear – 26T	6	47	1
68–4320	Sleeve – Shift	6	55	1
68–7450	Auger – R.H.	2	*	1
68–7460	Auger – L.H.	2	*	1
68–7510	Guide – Belt	4	8	1
68–8410	Cover – Belt (Lower)	2	41	1
74–1440	Skid Assembly	2	44	2
74–1560	Auger Gearbox Assembly	2	53	1
74–1570	Gearcase Assembly – L.H.	3	13	1
74–1580	Gearcase Assembly – R.H.	3	4	2
88–0810	Spring – Extension	9	39	1
2210–250	Screw	9	2	3
231–120	Tire	7	34	2
232–46	Tube – Inner	7	33	2
241–128	Rim – Wheel	7	32	2
252–59	Washer – Thrust	5	2	3
252–71	Bearing – Thrust	3	5	2
252–76	Bearing – Thrust	3	9	1
252–78	Washer – Thrust	3	8	2
252–80	Washer – Thrust	7	27	4
252–80	Washer – Thrust	2	36	1
253–149	Seal – Input	3	11	1
256–237	Bushing – Sleeve	3	3	2
256–296	Bushing – Nyliner	8	31	2
257–9	Washer – Thrust	8	14	1
257–10	Washer – Thrust	5	39	4
281–1	Plug – Pipe Sq. Hd.	3	14	1
283–3	Pin – Clevis	5	19	1
321–3	Screw – Hex Hd.	2	60	8
321–9	Screw – Cap Hex. Hd.	8	29	1
321–15	Screw – Hex Hd.	6	54	1
321–44	Screw – Hex. Hd.	2	52	2
323–6	Screw – Hex Hd.	1	1	2
323–7	Screw – Hex Hd.	7	8	2
3210–1	Screw – Hex Hd.	4	25	2
3212–8	Screw – Hex. Hd.	4	1	1
3220–3	Nut – Jam	4	26	1
3220–3	Nut – Jam	8	35	1
3230–2	Bolt – Carriage	1	8	1
3230–23	Screw – Carriage	2	48	9
3234–5	Screw – Hex. Washer Hd.	1	33	10
3234–7	Screw – Hex Flange Hd.	4	16	4
3234–7	Screw – Hex Flange Hd.	9	26	6
3234–7	Screw – Hex Flange Hd.	7	41	2
3234–13	Screw – Hex. Washer Hd.	7	5	1
3234–28	Screw – Hex Flange Hd.	1	4	12
3242–4	Screw – Set Sq. Hd.	1	25	2
3253–4	Washer – Lock	4	24	2
3253–6	Washer – Lock	4	2	1
3256–1	Washer – Flat	7	21	2
3256–1	Washer – Flat	8	27	2
3256–14	Washer – Flat	1	16	3
3256–23	Washer – Flat	8	24	3
3256–23	Washer – Flat	2	42	1
3256–61	Washer – Flat	1	21	1
3257–10	Key – Woodruff	3	12	1
3257–23	Key – Woodruff	2	35	1
3269–23	Rivet	1	30	4
3272–1	Pin – Cotter	5	17	1
3274–13	Screw – Machine	1	13	3
3290–243	Pin – Klik	7	38	2
3290–320	Nut – Push	8	15	1
3290–320	Nut – Push	9	18	2
3290–326	Nut – Push	1	15	2
3290–359	Screw	9	28	1
3290–378	Tie – Cable	9	30	3
3290–422	Nut – Push	8	4	1
3290–456	Washer – Belleville	8	37	1
3290–461	Washer – Belleville	7	16	2

*Not Illustrated

TORO PART NUMBER INDEX (Cont.)

Part No.	Description	Pg. No.	Ref. No.	Qty.
3290–461	Washer – Belleville	4	22	4
3290–476	Fastener – Panel	7	37	1
3290–477	Washer – Curved	5	14	1
3296–2	Nut – Lock	1	9	4
3296–2	Nut – Lock	9	23	1
3296–23	Nut – Lock	7	25	2
3296–29	Nut – Lock	8	25	7
3296–29	Nut – Lock	2	37	14
3296–39	Nut – Lock	7	15	2
3296–39	Nut – Lock	4	18	1
3296–39	Nut – Lock	8	32	1
3296–42	Nut – Lock	7	4	1
3296–42	Nut – Lock	5	23	1
3296–42	Nut – Lock	8	26	1
3296–42	Nut – Lock	2	49	10
3296–42	Nut Lock	9	42	4
3296–47	Nut – Lock	9	37	4
3296–47	Nut – Lock	7	39	2
3296–47	Nut – Lock	2	47	12
3296–59	Nut – Lock	7	7	2
32104–71	Screw – Pan Hd.	5	12	1
32104–76	Screw – Self Tapping	9	34	2
32104–95	Screw – Hex Washer Hd.	5	21	2
32104–118	Screw – Pan Hd.	8	11	2
32104–118	Screw – Pan Hd.	9	35	2
32104–121	Screw – Hex Flange Hd.	7	31	3
32120–46	Ring – Retaining	7	1	2
32120–46	Ring – Retaining	8	13	1
32121–9	Pin – Roll	7	19	2
32121–50	Pin – Roll	9	31	2
32121–106	Pin – Coil	5	6	3
32122–32	Screw	1	18	1
32128–20	Nut – Lock	4	15	4
32128–32	Nut – Flange Lock	6	51	1
32144–4	Screw	4	13	1
32144–4	Screw – Hex Flange Hd.	7	20	2
32144–4	Screw – Hex. Flange Hd.	1	27	6
32144–4	Screw – Self Tapping	5	8	2
32144–86	Screw – Hex Washer Hd.	5	25	6
32144–110	Screw – Hex Washer Hd.	3	17	9
32151–33	Ring – Snap	3	7	1
32151–66	Ring – Retaining	9	5	1
505–101	Grease – 14.5 oz. Cartridge	6	*	1
505–129	Sealant – 100g Tube	3	*	1

OPTIONAL EQUIPMENT

110 Volt Electric Starter Kit .... Part No. 37–4810
Snow Cab Kit ..... Part No. 68–9500
Weight Kit (Req'd with Snow Cab Kit) ..... Part No. 74–1190
Drift Breaker ..... Part No. 66–7960
Light Kit ..... Part No. 66–7930
Differential Kit ..... Model No. 38038
Tire Chain Kit ..... Part No. 56–2700

*Not Illustrated

PRODUCT CHANGES

In an effort to make improvements available to TORO owners as quickly as possible, minor changes are incorporated into Toro's products from time to time that do not become immediately shown in the Parts Catalog. If such a change has been made in your unit, which is not reflected in your manual, see your TORO Distributor or his Authorized TORO Service Dealer for information and part numbers.

COUNTRIES OTHER THAN THE UNITED STATES OR CANADA

Customers who have purchased TORO products exported from the United States or Canada should contact their Toro Distributor (Dealer) to obtain guarantee policies for your country, province or state. If for any reason you are dissatisfied with your Distributor's service or have difficulty obtaining guarantee information, contact the TORO importer. If all other remedies fail, you may contact us at The Toro Company.

MAINTENANCE RECORD

Date								

Compliance with Radio Interference Regulations Certified.
Certifie Conforme au Reglement sur le Brouillage Radioelectrique.

Litho in U.S.A.

MAINTENANCE RECORD

Date								