FORM NO. 3316–343

TORO®

MODEL NO. 38185–4900001 & UP
MODEL NO. 38186–4900001 & UP

PARTS CATALOG

CCR 2000® SNOWTHROWER

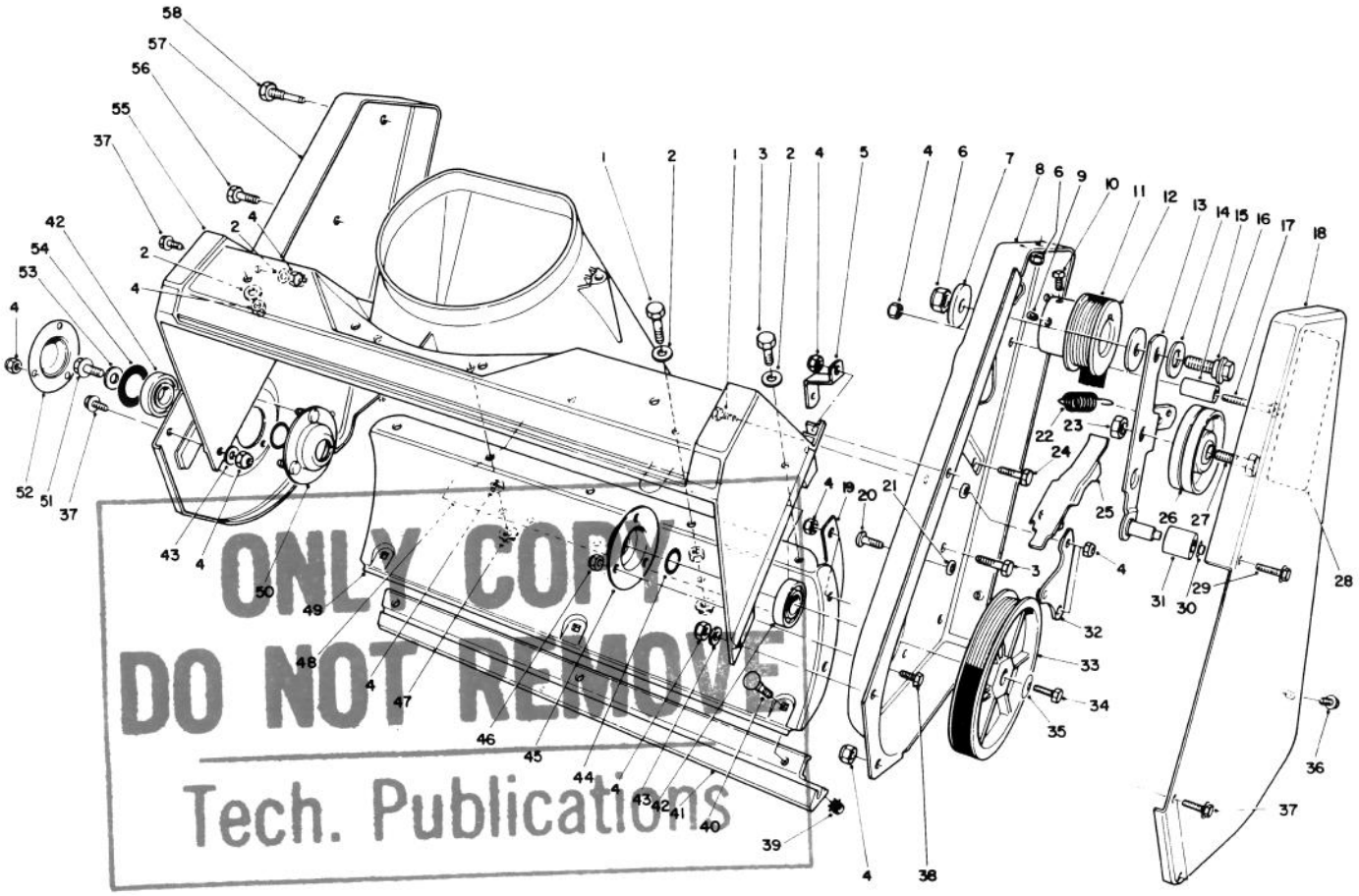

ONLY COPY
DO NOT REMOVE
Tech. Publications

C–0013

HOUSING ASSEMBLY

Ref. No.	Part No.	Description	No. Used
1	321–6	Screw – Hex. Hd.	3
2	3256–22	Washer	9
3	321–4	Screw – Hex. Hd.	5
4	3296–42	Nut – Lock	22
5	55–9430	Bracket – Housing	1
6	3296–29	Nut – Lock	3
7	5–4460	Washer	2
8	55–8851	Sideplate – L.H.	1
9	3245–41	Screw – Set	1
10	3241–7	Screw – Set, Sq. Hd.	1
11	55–9300	Belt – Drive	1
12	55–9180	Pulley – Engine	1
13	12–8279	Idler Arm Assembly (Incl. Ref. #30 & 31)	1
14	25–5640	Washer	1

Ref. No.	Part No.	Description	No. Used
15	55–9530	Guide – Drive Belt	1
16	27–0410	Screw – Shoulder	1
17	321–13	Screw – Hex. Hd.	1
18	55–9010	Cover – Drive	1
19	56–2610	Bracket – Lower Housing	1
20	3274–31	Screw – Button Hd.	1
21	55–9620	Spacer	3
22	55–9280	Spring – Extension	1
23	32152–2	Nut – Lock	1
24	322–3	Screw – Hex. Hd.	2
25	55–9550	Arm – Brake	1
26	55–9290	Pulley – Idler	1
27	323–29	Screw – Hex. Hd.	1
28	60–9480	Decal – Belt Routing	1
29	36–3860	Screw – Special	1

TPS

© The TORO Company – 1993
All Rights Reserved

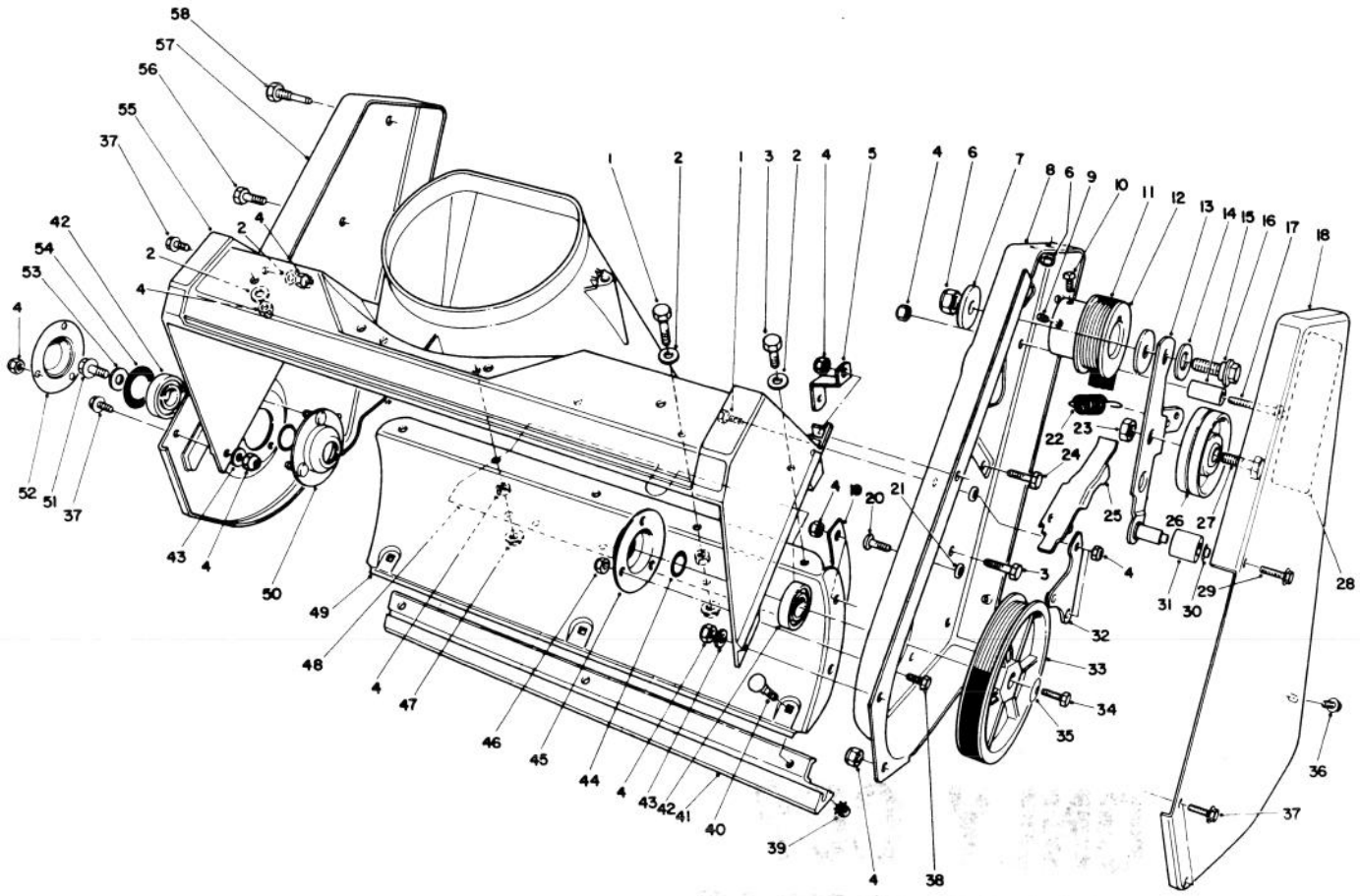

C-0013

HOUSING ASSEMBLY (CONTINUED)

Ref. No.	Part No.	Description	No. Used
30	32112-11	Pushnut	1
31	55-9520	Roller - Brake	1
32	55-9570	Pivot Plate Assembly	1
33	60-9320	Pulley - Rotor	1
34	321-30	Screw - Hex. Hd.	1
35	3290-456	Washer - Belleville	1
36	12-3270	Screw - Self Tapping	2
37	32105-15	Screw - Hex. Hd.	7
38	32105-8	Screw - Hex. Hd.	3
39	32149-2	Nut - Keps	3
40	3229-11	Screw - Carriage	3
41	55-8760	Scraper	1
42	38-7820	Bearing - Ball	2
43	3256-67	Washer	2
44	52-7280	Washer - Thrust	2

Ref. No.	Part No.	Description	No. Used
45	38-8620	Retainer - Bearing	1
46	3296-2	Nut - Lock	3
47	32128-10	Nut - Flange Lock	2
48	55-9512	Cover - Bottom	1
49	55-9220	Housing - Lower	1
50	52-9110	Flange - Bearing	1
51	3234-25	Screw - Hex. Flange Hd.	1
52	52-7290	Retainer - Bearing	1
53	3256-24	Washer	1
54	52-7270	Washer - Rubber	1
55	55-8700	Housing	1
56	322-43	Screw - Hex. Hd.	1
57	55-8840	Sideplate - R.H.	1
58	38-8211	Pin	1

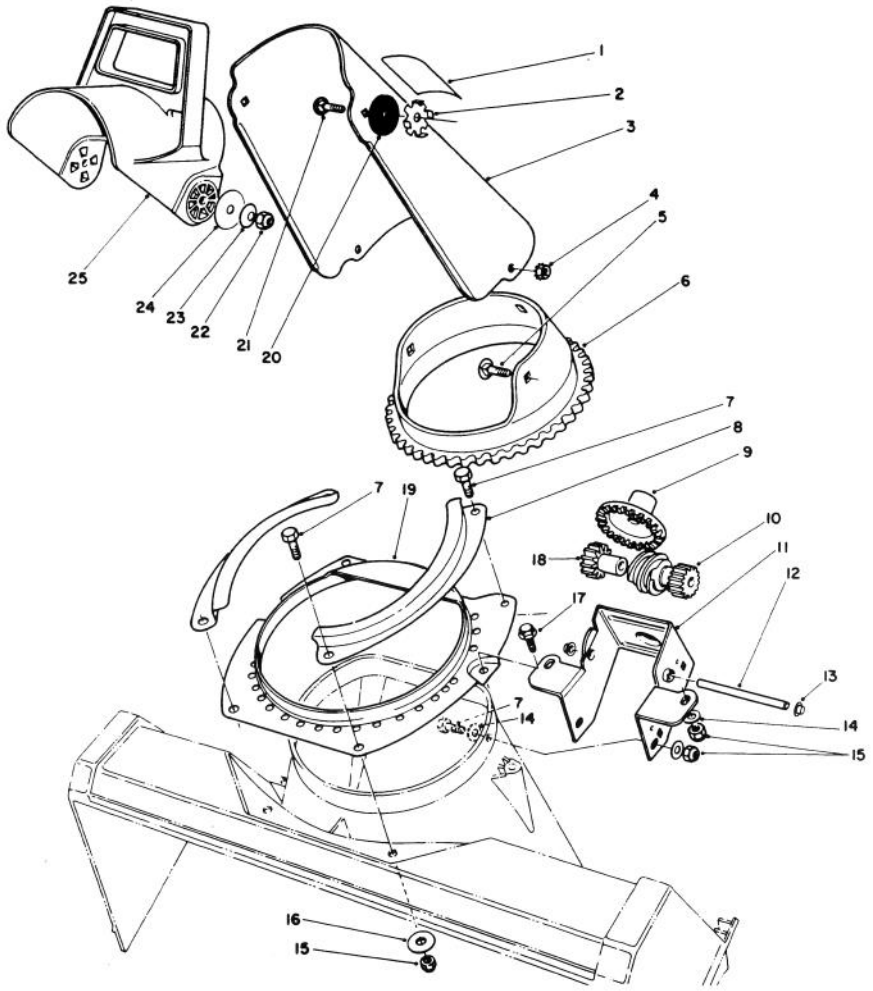

C–0014

DISCHARGE CHUTE ASSEMBLY

Ref. No.	Part No.	Description	No. Used
1	63–3740	Decal – Discharge (Model No. 38185)	1
*	63–3760	Decal – Discharge (Model No. 38186)	1
2	55–8950	Plate – Friction	2
3	12–8749	Chute – Discharge (Incl. Ref. #1: 63–3760)	1
4	32149–1	Nut – Keps	3
5	3230–18	Screw – Carriage	3
6	55–8720	Gear Ring – Chute	1
7	321–4	Screw – Hex. Hd.	6
8	55–8910	Retainer – Chute Ring	2
9	55–8740	Gear – Face	1
10	55–8730	Gear – Worm/Spur	1
11	84–5650	Bracket – Chute Gears	1

Ref. No.	Part No.	Description	No. Used
12	55–9150	Shaft – Gear	1
13	32112–11	Pushnut	2
14	3256–22	Washer	6
15	3296–42	Nut – Lock	6
16	3256–22	Washer	2
17	46–8092	Screw – Special	2
18	55–8750	Spacer – Spur Gear	1
19	55–8921	Ring – Chute Support	1
20	20–4320	Washer – Rubber	2
21	3230–22	Bolt – Carriage	2
22	3296–29	Nut – Lock	2
23	3290–456	Washer – Belleville	2
24	3256–68	Washer	2
25	56–2680	Deflector	1

*Not Illustrated

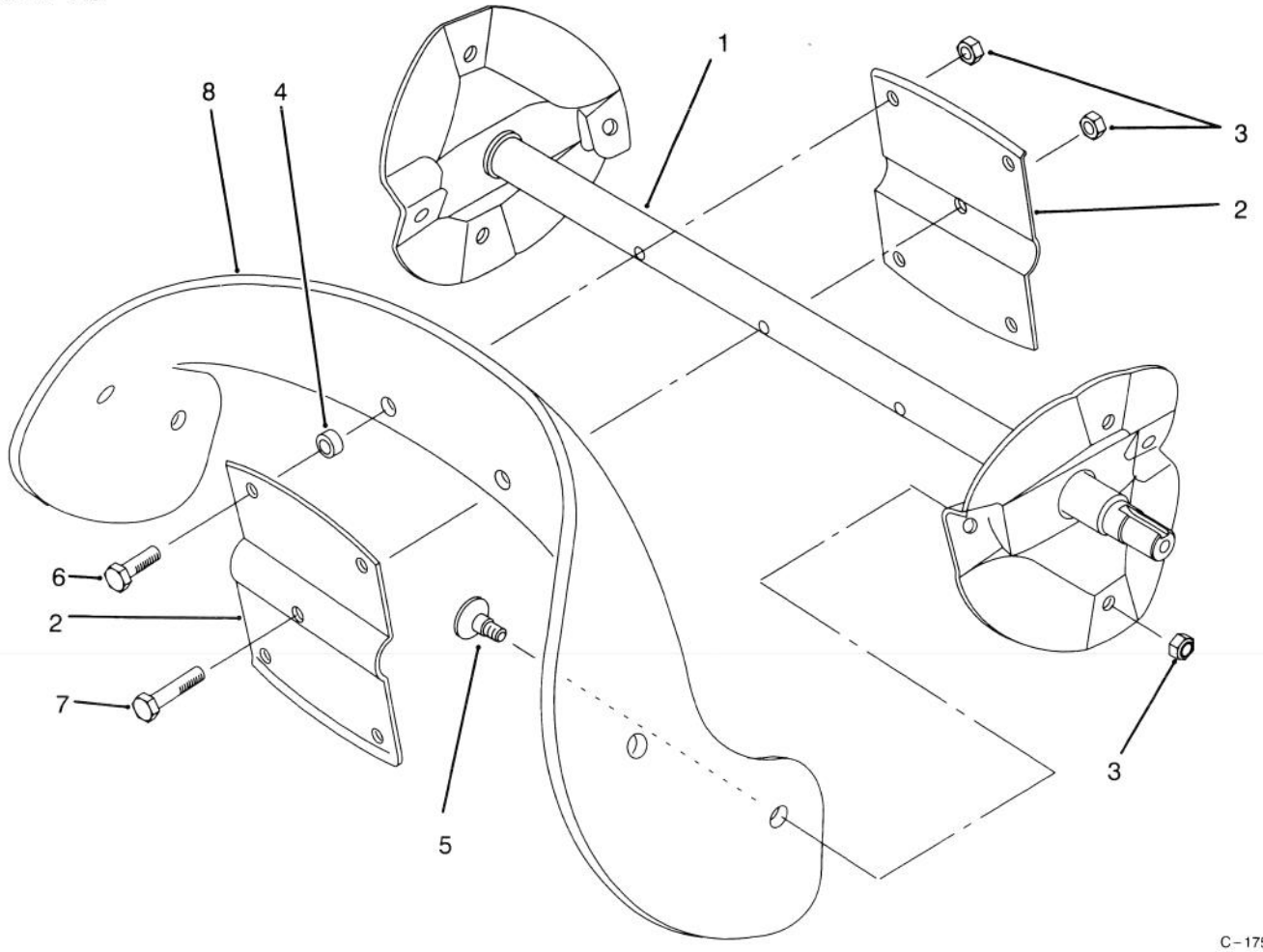

C–1755

ROTOR ASSEMBLY

Ref. No.	Part No.	Description	No. Used
1	55–9202	Rotor Shaft Assembly	1
2	66–6600	Rotor Half	2
3	3296–56	Nut – Lock	13
4	55–9370	Spacer	4

Ref. No.	Part No.	Description	No. Used
5	84–1971	Screw – Countersunk	8
6	321–4	Screw – Hex. Hd.	4
7	321–8	Screw – Hex. Hd.	1
8	88–0771	Blade – Rotor	2

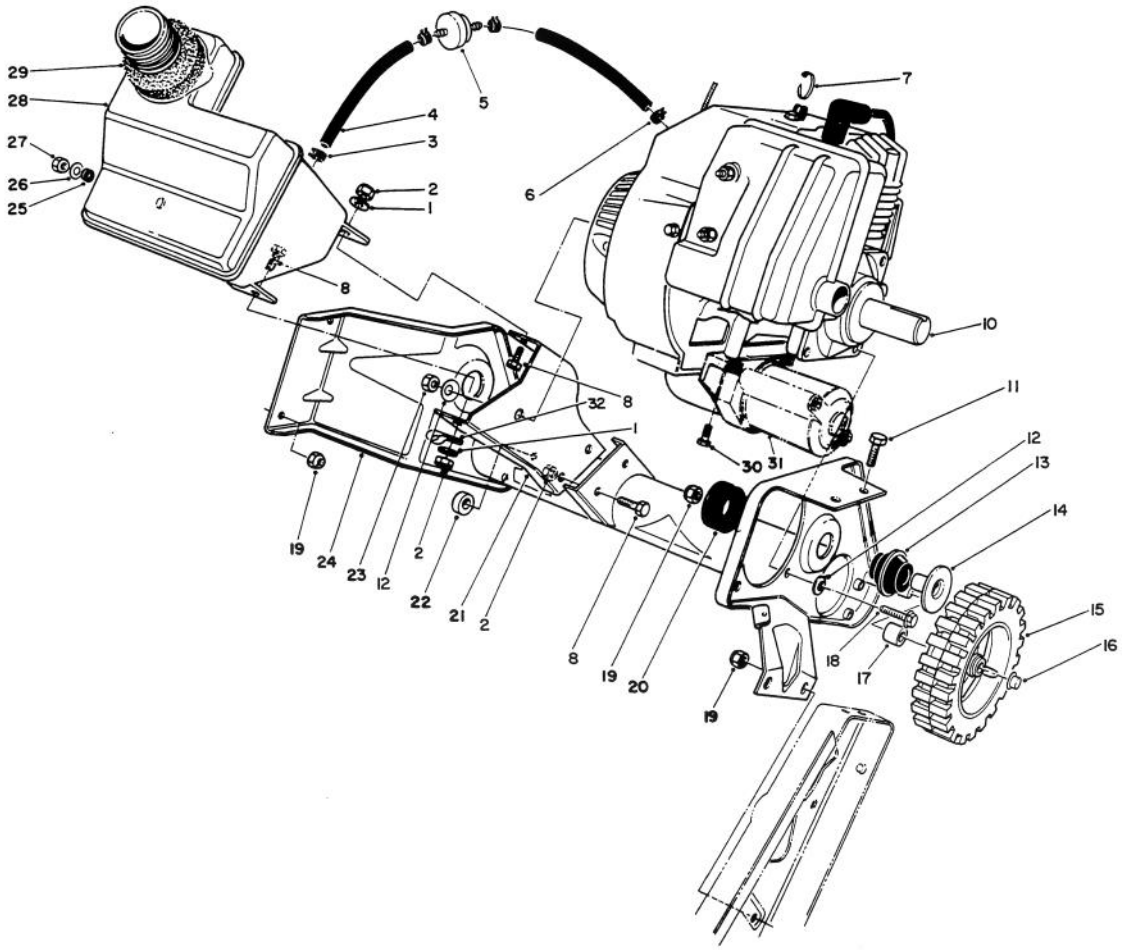

C–0026

ENGINE & MAIN FRAME ASSEMBLY

Ref. No.	Part No.	Description	No. Used
1	3256–22	Washer	2
2	3296–42	Nut – Lock	4
3	2412–86	Clamp– Fuel Line	3
4	49–2481	Line – Fuel	2
5	56–6360	Filter – Fuel	1
6	2412–80	Clamp – Fuel Line	1
7	250–4	Cable Tie	1
8	321–4	Screw – Hex Hd.	4
10	81–5240	Engine Assembly	1
11	322–3	Screw – Hex Hd.	2
12	3290–456	Washer – Belleville	5
13	55–9460	Mount – Rebound	2
14	55–9470	Tube – Spacer	2
15	66–6510	Wheel	2
16	32112–14	Pushnut	2
17	66–6501	Spacer – Wheel	1

Ref. No.	Part No.	Description	No. Used
18	81–0570	Bolt – Engine Mount	4
19	3296–29	Nut – Lock	5
20	55–9450	Mount – Load	2
21	55–9070	Support – Recoil	1
22	66–6500	Spacer – Wheel	1
23	81–0300	Nut – Hex	1
24	63–3750	Frame – Assembly	1
25	237–89	Grommet	1
26	3256–23	Washer	1
27	32152–8	Nut – Lock	1
28	13–2459	Tank – Fuel (Incl. Ref. #25)	1
29	55–9310	Seal – Tank	1
30	56–6380	Screw, M8	2
31*		Starter Motor Assembly	1
32	2412–91	Clamp – Cable	1

*Note: See page 7

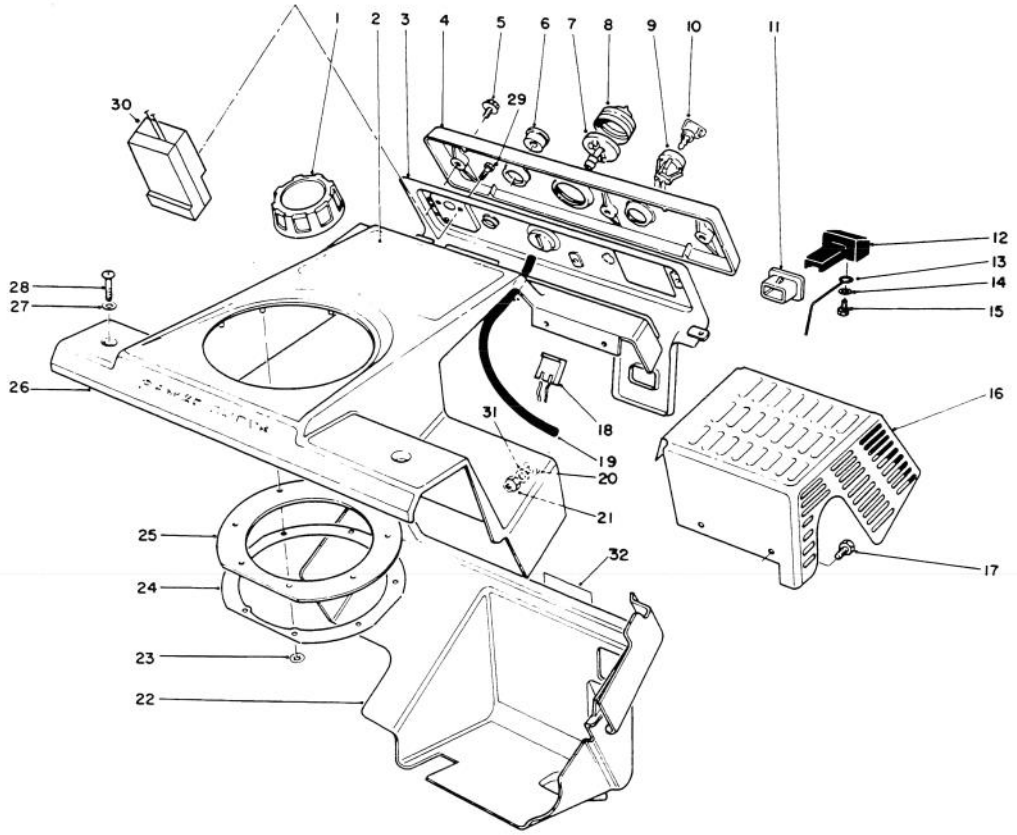

C–0027

CONTROL PANEL & SHROUDING ASSEMBLY

Ref. No.	Part No.	Description	No. Used
1	55–3573	Gas Cap Assembly	1
2	77–5220	Decal – CCR–2000E	1
3	12–4659	Panel – Control (Incl. Ref. #6–8 & 11)	1
4	61–4410	Name Plate Control (Model No. 38185)	1
*	61–4470	Name Plate Control (Model No. 38186)	1
5	32144–112	Screw	3
6	55–9410	Guide – Starter Rope	1
7	44–2750	Body – Primer	1
8	66–7460	Bulb – Primer	1
9	40–5940	Switch – Key	1
10	63–8360	Key	1
11	55–8820	Fitting – Choke Control	1
12	55–8810	Control – Choke (Model No. 38185)	1
*	55–8811	Control – Choke (Model No. 38186)	1
13	61–4651	Linkage – Choke	1
14	3256–49	Washer	1

Ref. No.	Part No.	Description	No. Used
15	32144–111	Screw – Hex Hd.	1
16	55–9210	Shield – Heat	1
17	32105–8	Screw – Hex Hd.	4
18	218–532	Connector Body	1
19	44–3171	Hose – Primer	1
20	55–9660	Washer – Rubber	4
21	3296–12	Nut – Lock	4
22	55–8791	Shroud – Lower	1
23	3290–474	Pushnut	8
24	55–9540	Retainer – Chute Seal	1
25	55–9260	Seal – Chute	1
26	12–5949	Upper Shroud Assembly (Incl. Ref. #2 & 23–25)	1
27	3256–22	Washer	2
28	3250–32	Screw – Phillips	2
29	32144–27	Screw	3
30†		Switch Assembly	1
31	3256–14	Washer	4
32	61–4790	Decal – Warning (Model No. 38186	1

*Not Illustrated
†Note: See page 7

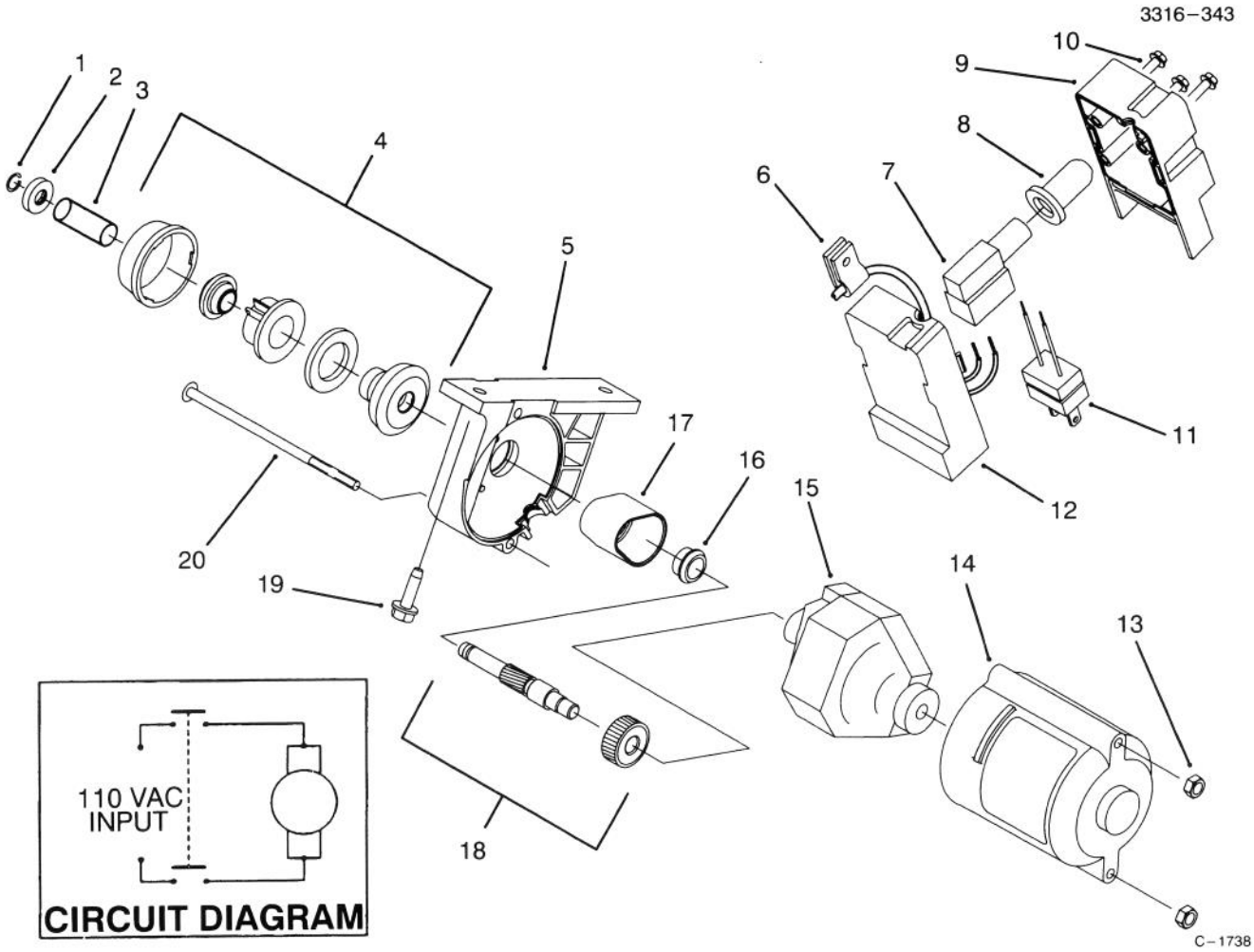

STARTER MOTOR & SWITCH HOUSING ASSEMBLY

Ref. No.	Part No.	Description	No. Used
1	61-4680	Ring – Lock	1
2	61-4670	Stop – Pinion	1
3	61-4690	Spring – Anti Drift	3
4	61-4700	Pinion Assembly	1
5	80-0710	Housing – Mtg.	1
6	2412-91	R-Clamp	1
7	61-4820	Switch – Starter	1
8	61-4810	Boot – Switch	1
9	80-3740	Cap – Switch Housing	1
10	32144-27	Screw – Self Tap	3
11	36-8370	Plug – Power	1

Ref. No.	Part No.	Description	No. Used
12	80-3730	Base – Switch Housing	1
13	3296-2	Nut – Lock	2
14	83-7350	Housing – Motor	1
15	70-7801	Starter Motor Assembly	1
16	70-7900	Bushing – upper	1
17	70-7850	Cover – Gear	1
18	92-6003	Shaft & Gear Assembly	1
19	56-6380	Screw – Mounting	2
20	32144-101	Screw – Phillips Pan Hd.	2

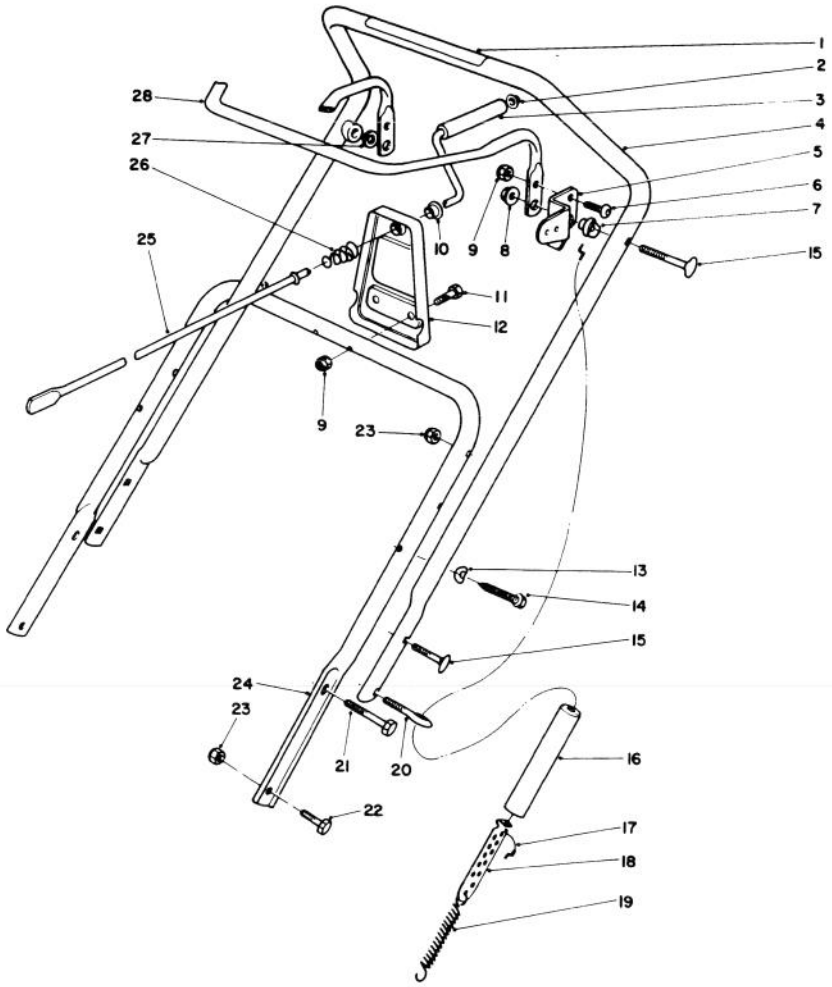

C-0018

HANDLE ASSEMBLY

Ref. No.	Part No.	Description	No. Used
1	66-6870	Decal – Rotor Drive (Model 38185)	1
	60-9470	Decal – Rotor Drive (Model 38186)	1
2	3290-320	Pushnut	1
3	66-6540	Grip – Crank Handle	1
4	12-5939	Upper Handle Assembly (Incl. ref. #1, Model 38185)	1
*	14-9369	Upper Handle Assembly (Incl. ref. #1, Model 38186)	1
5	55-9100	Arm – Clutch Cable	1
6	3274-31	Screw – Button Hd.	1
7	55-9340	Spacer – Control Bar	2
8	32111-8	Nut – Acorn	2
9	3296-42	Nut – Lock	3
10	256-249	Nyliner	1
11	321-13	Screw – Hex. Hd.	2
12	55-9090	Support – Chute Crank	1
13	3-7501	Washer – Curved	2

Ref. No.	Part No.	Description	No. Used
14	61-8640	Screw – Hex. Hd.	2
15	17-9424	Screw – Handle	5
16	55-9390	Cover – Spring	1
17	55-9321	Cable – Clutch	1
18	55-9380	Adjuster – Clutch Cable	1
19	55-9270	Spring – Extension	1
20	55-9420	Bolt – Eye	1
21	322-9	Screw – Hex. Hd.	2
22	322-3	Screw – Hex. Hd.	2
23	3296-29	Nut – Lock	6
24	55-9121	Handle – Lower (Model 38185)	1
*	55-9120	Handle – Lower (Model 38186)	1
25	55-9140	Rod – Chute Crank	1
26	55-9440	Spring – Compression	1
27	55-9670	Washer – Rubber	1
28	55-9130	Bar – Control	1

*Not Illustrated

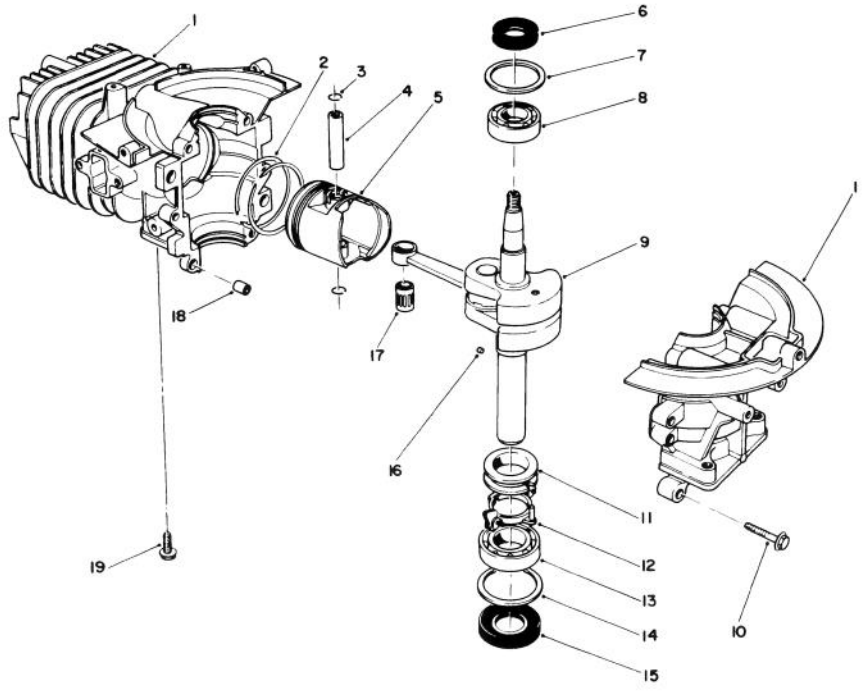

C-0019

SHORT BLOCK ASSEMBLY
(Engine Model 47PP3-5)

Ref. No.	Part No.	Description	No. Used
1	81-4590	Cylinder/Crankcase Assembly	1
2	81-0590	Ring Set	1
3	81-0620	Circlip	2
4	82-0600	Pin - Wrist	1
5	81-0580	Piston	1
6	81-0720	Seal - Oil	1
7	81-0710	Washer - Thrust	1
8	81-0690	Bearing - Upper	1
9	81-5700	Crankshaft	1
10	81-0540	Bolt	5
11	81-0770	Collar - Governor	1

Ref. No.	Part No.	Description	No. Used
12	81-0750	Bracket - Centrifugal Governor	1
13	81-0700	Bearing - Lower	1
14	81-0730	Washer - Thrust	1
15	81-0740	Seal - Oil	1
16	81-0760	Pin - Governor	1
17	81-0610	Pin - Wrist	1
18	81-0520	Dowel Pin - Crankcase	2
19	81-0570	Bolt	4
*	12-5909	Short Block (Incl. Ref. #1-19)	1

*Not Illustrated

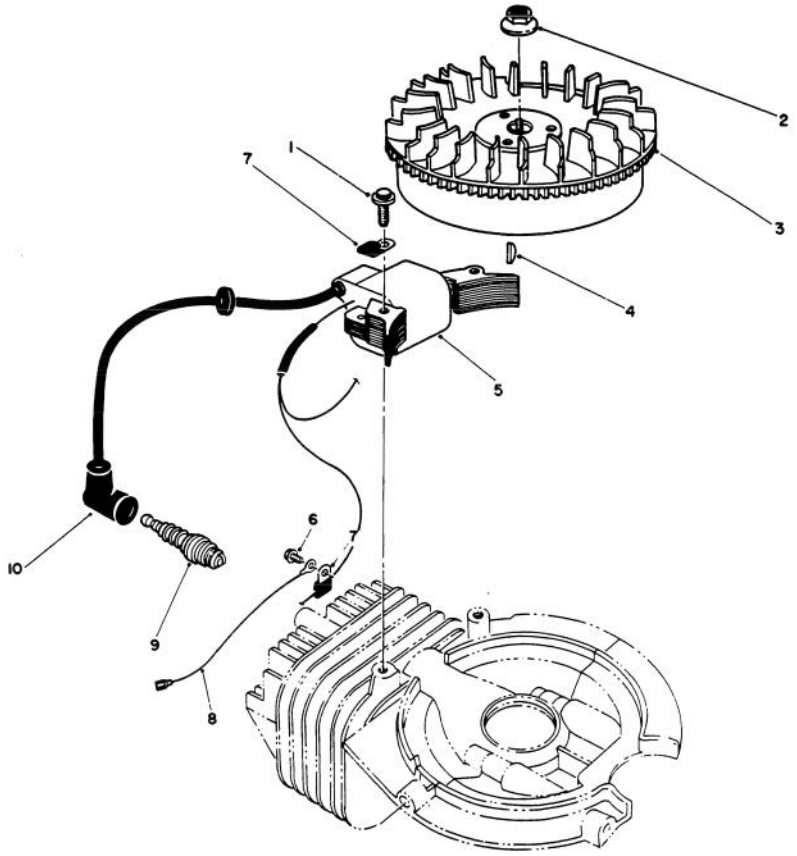

C–0029

FLYWHEEL & MAGNETO ASSEMBLY (Engine Model 47PP3–5)

Ref. No.	Part No.	Description	No. Used
1	81–5710	Screw – Socket Hd. Cap	2
2	81–1330	Nut – Hex. Flange	1
3	81–4620	Flywheel	1
4	81–2370	Woodruff Key	1
5	81–4630	Coil – Magneto	1
6	53–1340	Bolt	1

Ref. No.	Part No.	Description	No. Used
7	81–1480	Clamp	2
8	81–2860	Wire – Ground	1
9	81–0181	Spark Plug	1
10	81–1500	Cover – Spark Plug	1
*	41–7650	Puller – Flywheel	1

*Not Illustrated

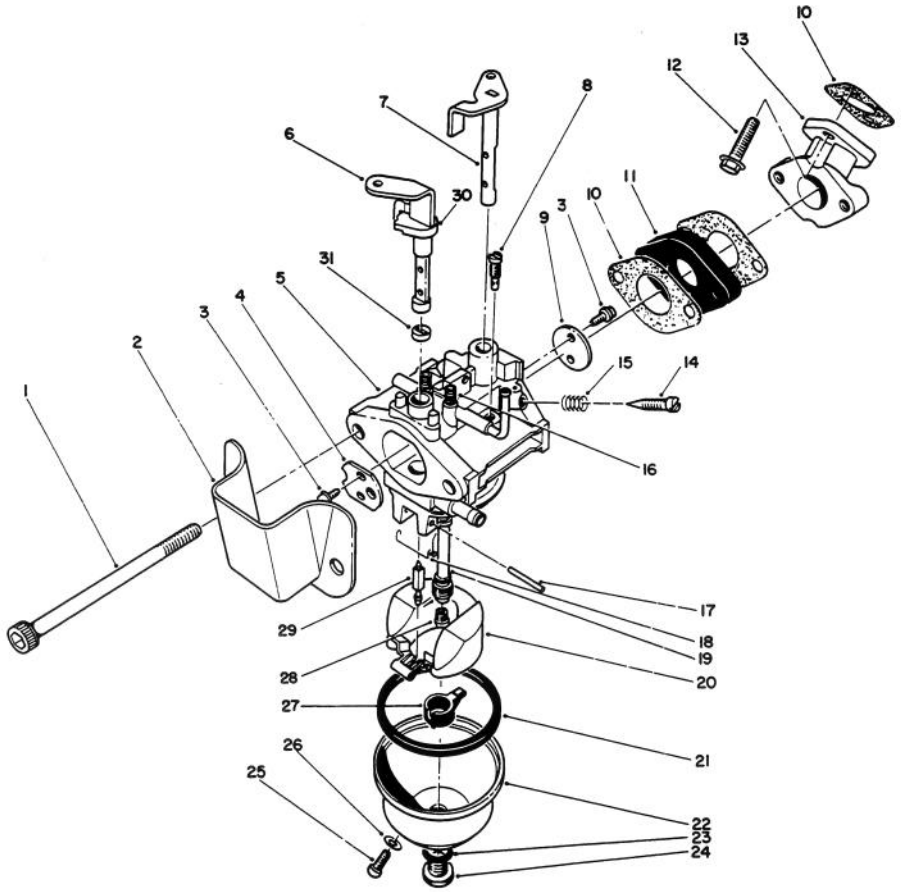

C–0021

CARBURETOR ASSEMBLY (Engine Model 47PP3–5)

Ref. No.	Part No.	Description	No. Used
1	81–0450	Screw	2
2	81–2700	Spitcup	1
3	81–2710	Screw	4
4	81–2720	Valve – Choke	1
5		Body – Carburetor	1
6	81–5510	Shaft – Choke (Incl. Ref. #30 & 31)	1
7	81–2920	Shaft – Throttle	1
8	81–2930	Jet – Pilot	1
9	81–2940	Valve – Throttle	1
10	81–2570	Gasket – Carburetor	3
11	81–0460	Insulator – Carburetor	1
12	50–6350	Bolt	2
13	81–0470	Manifold – Intake	1
14	50–2360	Screw – Pilot	1
15	81–2580	Spring – Pilot Screw	1
16	81–2590	Spring – Choke Detent	2
17	81–2600	Pin – Hinge	1
18	81–2610	Spring – Torsion	1
19	81–2740	Nozzle – Main	1
20	81–4920	Float	1

Ref. No.	Part No.	Description	No. Used
21	81–2630	Gasket – Float Bowl	1
22	81–2640	Bowl – Float	1
23	81–2650	Gasket – Bowl Screen	1
24	81–2660	Screw – Float Bowl	1
25	81–2670	Screw – Drain	1
26	81–2680	Gasket – Drain Screw	1
27	81–4930	Spacer – Float	1
28	81–1040	Jet – Main (#80)	1
*	81–1940	Jet – Main (#73.6)	1
29	81–4700	Needle	1
30	81–5520	Ring – Upper Choke	1
31	81–5530	Ring – Lower Choke	1
*	81–4690	Carburetor Assembly Complete	1
*	81–2910	Choke Shaft Assembly (Incl. Ref. #6, 30 & 31)	1
*	81–5820	Needle Valve Seat Kit	1
*	92–6002	Carburetor Kit (Incl. Ref. #10, 18, 21, 26, 31, & Part No. 81–8520)	1

*Not Illustrated

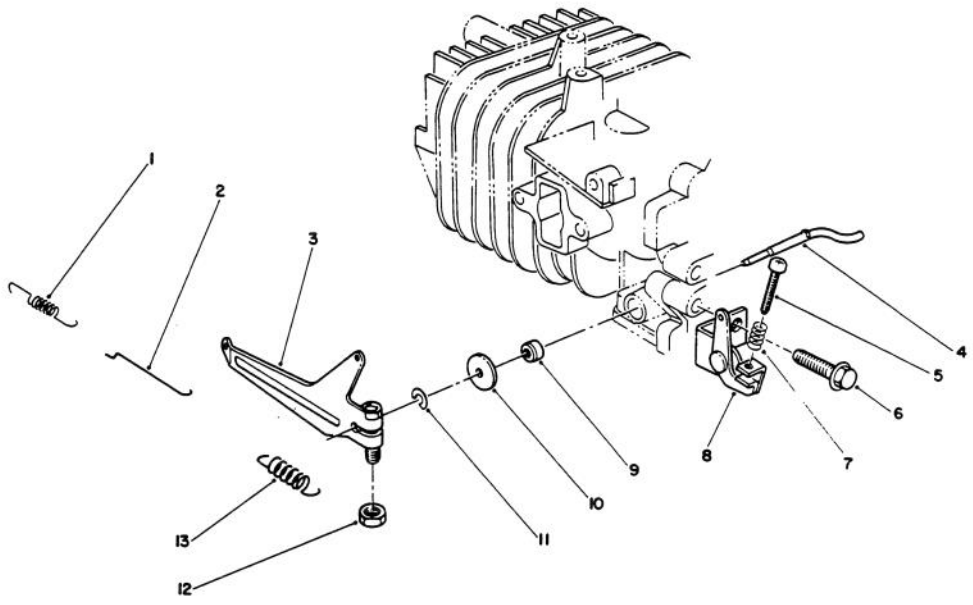

C–0022

GOVERNOR ASSEMBLY
(Engine Model 47PP3–5)

Ref. No.	Part No.	Description	No. Used
1	81–0440	Spring – Carburetor	1
2	81–0430	Rod – Carburetor	1
3	81–4650	Arm – Governor	1
4	81–2880	Shaft – Governor	1
5	81–2890	Screw	1
6	81–0540	Bolt	1
7	81–2900	Spring – Compression	1

Ref. No.	Part No.	Description	No. Used
8	81–0370	Bracket – Governor Spring	1
9	81–0850	Seal – Oil	1
10	81–0860	Washer	1
11	81–0870	E–Ring	1
12	81–0900	Nut – Hex	1
13	81–0360	Spring – Governor	1

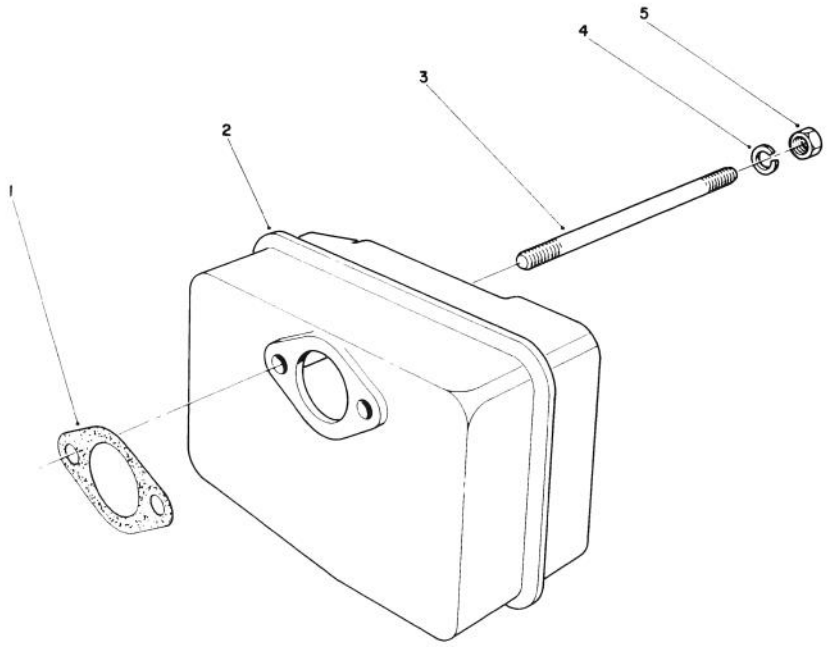

C-0023

MUFFLER ASSEMBLY
(Engine Model 47PP3-5)

Ref. No.	Part No.	Description	No. Used
1	81-1080	Gasket - Muffler	1
2	81-0490	Muffler	1
3	81-0500	Stud - Muffler	2

Ref. No.	Part No.	Description	No. Used
4	81-1120	Washer - Lock	2
5	81-1110	Nut - Hex	2

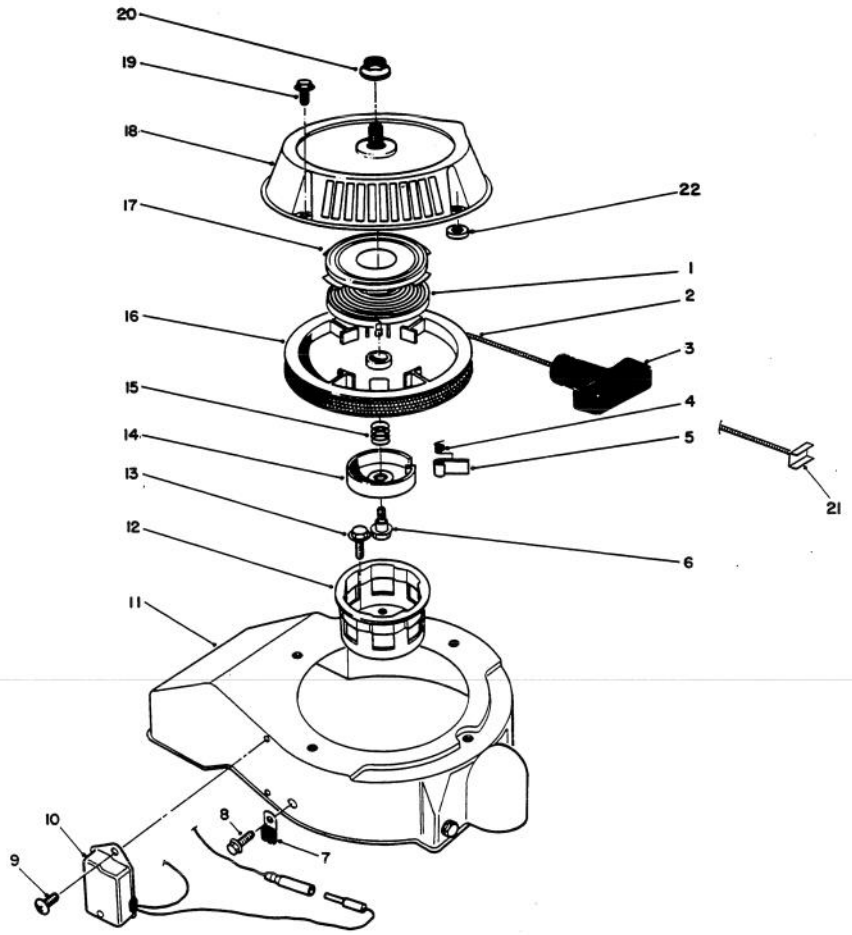

C–0030

RECOIL STARTER ASSEMBLY (Engine Model 47PP3–5)

Ref. No.	Part No.	Description	No. Used
1	81–1200	Spring – Recoil	1
2	81–1270	Rope	1
3	81–1630	Handle – Recoil	1
4	81–1220	Spring – Dog	1
5	81–1230	Dog – Starter	1
6	81–1260	Bolt	1
7	55–3070	Clamp – Magneto Wire	1
8	53–1340	Bolt	3
9	81–4660	Screw	2
10	81–4640	Xstar Module – Magneto	1
11	81–4610	Shroud – Blower	1
12	81–1290	Cup – Starter	1
13	81–1300	Bolt	3
14	81–1250	Retainer – Dog	1

Ref. No.	Part No.	Description	No. Used
15	81–1240	Spring – Compression	1
16	81–1210	Reel – Rope Pulley	1
17		Retainer – Recoil Spring	1
18	81–0290	Case – Recoil	1
19	81–0390	Bolt	4
20	81–0300	Nut – Flange Lock	1
21	81–5760	Insert Handle	1
*	81–0280	Recoil Assembly (Incl. Ref. #1–6 & 14–18)	1
22	55–9620	Spacer	1
*	81–2300	Recoil Spring & Retainer Assembly (Incl. Ref. #1 & 17)	1

*Not Illustrated

TORO PART NUMBER INDEX

Part No.	Description	Pg. No.	Ref. No.	Qty.
3–7501	Washer – Curved	8	13	2
5–4460	Washer	1	7	2
12–3270	Screw – Self Tapping	2	36	2
12–4659	Panel – Control	6	3	1
12–5909	Short Block	9	*	1
12–5939	Upper Handle Assembly	8	4	1
12–5949	Upper Shroud Assembly	6	26	1
12–8279	Idler Arm Assembly	1	13	1
12–8749	Chute – Discharge	3	3	1
13–2459	Tank – Fuel	5	28	1
14–9369	Upper Handle Assembly	8	*	1
17–9424	Screw – Handle	8	15	5
20–4320	Washer – Rubber	3	20	2
25–5640	Washer	1	14	1
27–0410	Screw – Shoulder	1	16	1
36–3860	Screw – Special	1	29	1
36–8370	Plug – Power	7	11	1
38–7820	Bearing – Ball	2	42	2
38–8211	Pin	2	58	1
38–8620	Retainer – Bearing	2	45	1
40–5940	Switch – Key	6	9	1
41–7650	Puller – Flywheel	10	*	1
44–2750	Body – Primer	6	7	1
44–3171	Hose – Primer	6	19	1
46–8092	Screw – Special	3	17	2
49–2481	Line – Fuel	5	4	2
50–2360	Screw – Pilot	11	14	1
50–6350	Bolt	11	12	2
52–7270	Washer – Rubber	2	54	1
52–7280	Washer – Thrust	2	44	2
52–7290	Retainer – Bearing	2	52	1
52–9110	Flange – Bearing	2	50	1
53–1340	Bolt	10	6	1
53–1340	Bolt	14	8	3
55–3070	Clamp – Magneto Wire	14	7	1
55–3573	Gas Cap Assembly	6	1	1
55–8700	Housing	2	55	1
55–8720	Gear Ring – Chute	3	6	1
55–8730	Gear – Worm/Spur	3	10	1
55–8740	Gear – Face	3	9	1
55–8750	Spacer – Spur Gear	3	18	1
55–8760	Scraper	2	41	1
55–8791	Shroud – Lower	6	22	1
55–8810	Control – Choke	6	12	1
55–8811	Control – Choke	6	*	1
55–8820	Fitting – Choke Control	6	11	1
55–8840	Sideplate – R.H.	2	57	1
55–8851	Sideplate – L.H.	1	8	1
55–8910	Retainer – Chute Ring	3	8	2
55–8921	Ring – Chute Support	3	19	1
55–8950	Plate – Friction	3	2	2
55–9010	Cover – Drive	1	18	1
55–9070	Support – Recoil	5	21	1
55–9090	Support – Chute Crank	8	12	1
55–9100	Arm – Clutch Cable	8	5	1
55–9120	Handle – Lower	8	*	1
55–9121	Handle – Lower	8	24	1
55–9130	Bar – Control	8	28	1
55–9140	Rod – Chute Crank	8	25	1
55–9150	Shaft – Gear	3	12	1
55–9180	Pulley – Engine	1	12	1
55–9202	Rotor Shaft Assembly	4	1	1
55–9210	Shield – Heat	6	16	1
55–9220	Housing – Lower	2	49	1
55–9260	Seal – Chute	6	25	1
55–9270	Spring – Extension	8	19	1
55–9280	Spring – Extension	1	22	1
55–9290	Pulley – Idler	1	26	1
55–9300	Belt – Drive	1	11	1
55–9310	Seal – Tank	5	29	1
55–9321	Cable – Clutch	8	17	1
55–9340	Spacer – Control Bar	8	7	2
55–9370	Spacer	4	4	4
55–9380	Adjuster – Clutch Cable	8	18	1
55–9390	Cover – Spring	8	16	1
55–9410	Guide – Starter Rope	6	6	1
55–9420	Bolt – Eye	8	20	1
55–9430	Bracket – Housing	1	5	1
55–9440	Spring – Compression	8	26	1
55–9450	Mount – Load	5	20	2
55–9460	Mount – Rebound	5	13	2
55–9470	Tube – Spacer	5	14	2
55–9512	Cover – Bottom	2	48	1
55–9520	Roller – Brake	2	31	1
55–9530	Guide – Drive Belt	1	15	1
55–9540	Retainer – Chute Seal	6	24	1
55–9550	Arm – Brake	1	25	1
55–9570	Pivot Plate Assembly	2	32	1
55–9620	Spacer	14	22	1
55–9620	Spacer	1	21	3
55–9660	Washer – Rubber	6	20	4
55–9670	Washer – Rubber	8	27	1
56–2610	Bracket – Lower Housing	1	19	1
56–2680	Deflector	3	25	1
56–6360	Filter – Fuel	5	5	1
56–6380	Screw – Mounting	7	19	2
56–6380	Screw, M8	5	30	2
60–9320	Pulley – Rotor	2	33	1
60–9470	Decal – Rotor Drive	8		1
60–9480	Decal – Belt Routing	1	28	1
61–4410	Name Plate Control	6	4	1
61–4470	Name Plate Control	6	*	1
61–4651	Linkage – Choke	6	13	1
61–4670	Stop – Pinion	7	2	1
61–4680	Ring – Lock	7	1	1
61–4690	Spring – Anti Drift	7	3	3
61–4700	Pinion Assembly	7	4	1
61–4790	Decal – Warning	6	32	1
61–4810	Boot – Switch	7	8	1
61–4820	Switch – Starter	7	7	1
61–8640	Screw – Hex. Hd.	8	14	2
63–3740	Decal – Discharge	3	1	1
63–3750	Frame – Assembly	5	24	1
63–3760	Decal – Discharge	3	*	1
63–8360	Key	6	10	1
66–6500	Spacer – Wheel	5	22	1
66–6501	Spacer – Wheel	5	17	1
66–6510	Wheel	5	15	2
66–6540	Grip – Crank Handle	8	3	1
66–6600	Rotor Half	4	2	2
66–6870	Decal – Rotor Drive	8	1	1
66–7460	Bulb – Primer	6	8	1
70–7801	Starter Motor Assembly	7	15	1
70–7850	Cover – Gear	7	17	1
70–7900	Bushing – Upper	7	16	1
77–5220	Decal – CCR–2000E	6	2	1
80–0710	Housing – Mtg.	7	5	1
80–3730	Base – Switch Housing	7	12	1

*Not Illustrated

TORO PART NUMBER INDEX (Cont.)

Part No.	Description	Pg. No.	Ref. No.	Qty.
80-3740	Cap – Switch Housing	7	9	1
81-0181	Spark Plug	10	9	1
81-0280	Recoil Assembly	14	*	1
81-0290	Case – Recoil	14	18	1
81-0300	Nut – Flange Lock	14	20	1
81-0300	Nut – Hex	5	23	1
81-0360	Spring – Governor	12	13	1
81-0370	Bracket – Governor	12	8	1
81-0390	Bolt	14	19	4
81-0430	Rod – Carburetor	12	2	1
81-0440	Spring – Carburetor	12	1	1
81-0450	Screw	11	1	2
81-0460	Insulator – Carburetor	11	11	1
81-0470	Manifold – Intake	11	13	1
81-0490	Muffler	13	2	1
81-0500	Stud – Muffler	13	3	2
81-0520	Dowel Pin – Crankcase	9	18	2
81-0540	Bolt	12	6	1
81-0540	Bolt	9	10	5
81-0570	Bolt	9	19	4
81-0570	Bolt – Engine Mount	5	18	4
81-0580	Piston	9	5	1
81-0590	Ring Set	9	2	1
81-0610	Pin – Wrist	9	17	1
81-0620	Circlip	9	3	2
81-0690	Bearing – Upper	9	8	1
81-0700	Bearing – Lower	9	13	1
81-0710	Washer – Thrust	9	7	1
81-0720	Seal – Oil	9	6	1
81-0730	Washer – Thrust	9	14	1
81-0740	Seal – Oil	9	15	1
81-0750	Bracket – Centrifugal	9	12	1
81-0760	Pin – Governor	9	16	1
81-0770	Collar – Governor	9	11	1
81-0850	Seal – Oil	12	9	1
81-0860	Washer	12	10	1
81-0870	E-Ring	12	11	1
81-0900	Nut – Hex	12	12	1
81-1040	Jet – Main (#80)	11	28	1
81-1080	Gasket – Muffler	13	1	1
81-1110	Nut – Hex	13	5	2
81-1120	Washer – Lock	13	4	2
81-1200	Spring – Recoil	14	1	1
81-1210	Reel – Rope Pulley	14	16	1
81-1220	Spring – Dog	14	4	1
81-1230	Dog – Starter	14	5	1
81-1240	Spring – Compression	14	15	1
81-1250	Retainer – Dog	14	14	1
81-1260	Bolt	14	6	1
81-1270	Rope	14	2	1
81-1290	Cup – Starter	14	12	1
81-1300	Bolt	14	13	3
81-1330	Nut – Hex. Flange	10	2	1
81-1480	Clamp	10	7	2
81-1500	Cover – Spark Plug	10	10	1
81-1630	Handle – Recoil	14	3	1
81-1940	Jet – Main (#73.6)	11	*	1
81-2300	Recoil Spring &	14	*	1
81-2370	Woodruff Key	10	4	1
81-2570	Gasket – Carburetor	11	10	3
81-2580	Spring – Pilot Screw	11	15	1
81-2590	Spring – Choke Detent	11	16	2
81-2600	Pin – Hinge	11	17	1
81-2610	Spring – Torsion	11	18	1
81-2630	Gasket – Float Bowl	11	21	1
81-2640	Bowl – Float	11	22	1
81-2650	Gasket – Bowl Screen	11	23	1
81-2660	Screw – Float Bowl	11	24	1
81-2670	Screw – Drain	11	25	1
81-2680	Gasket – Drain Screw	11	26	1
81-2700	Spitcup	11	2	1
81-2710	Screw	11	3	4
81-2720	Valve – Choke	11	4	1
81-2740	Nozzle – Main	11	19	1
81-2860	Wire – Ground	10	8	1
81-2880	Shaft – Governor	12	4	1
81-2890	Screw	12	5	1
81-2900	Spring – Compression	12	7	1
81-2910	Choke Shaft Assembly	11	*	1
81-2920	Shaft – Throttle	11	7	1
81-2930	Jet – Pilot	11	8	1
81-2940	Valve – Throttle	11	9	1
81-4590	Cylinder/Crankcase	9	1	1
81-4610	Shroud – Blower	14	11	1
81-4620	Flywheel	10	3	1
81-4630	Coil – Magneto	10	5	1
81-4640	Xstar Module – Magneto	14	10	1
81-4650	Arm – Governor	12	3	1
81-4660	Screw	14	9	2
81-4690	Carburetor Assembly	11	*	1
81-4700	Needle	11	29	1
81-4920	Float	11	20	1
81-4930	Spacer – Float	11	27	1
81-5240	Engine Assembly	5	10	1
81-5510	Shaft – Choke	11	6	1
81-5520	Ring – Upper Choke	11	30	1
81-5530	Ring – Lower Choke	11	31	1
81-5700	Crankshaft	9	9	1
81-5710	Screw – Socket Hd. Cap	10	1	2
81-5760	Insert Handle	14	21	1
81-5820	Needle Valve Seat Kit	11	*	1
82-0600	Pin – Wrist	9	4	1
83-7350	Housing – Motor	7	14	1
84-1971	Screw – Countersunk	4	5	8
84-5650	Bracket – Chute Gears	3	11	1
88-0771	Blade – Rotor	4	8	2
92-6002	Carburetor Kit	11	*	1
92-6003	Shaft & Gear Assembly	7	18	1
218-532	Connector Body	6	18	1
237-89	Grommet	5	25	1
2412-80	Clamp – Fuel Line	5	6	1
2412-86	Clamp– Fuel Line	5	3	3
2412-91	Clamp – Cable	5	32	1
2412-91	R-Clamp	7	6	1
250-4	Cable Tie	5	7	1
256-249	Nyliner	8	10	1
321-4	Screw – Hex Hd.	5	8	4
321-4	Screw – Hex. Hd.	1	3	5
321-4	Screw – Hex. Hd.	3	7	6
321-4	Screw – Hex. Hd.	4	6	4
321-6	Screw – Hex. Hd.	1	1	3
321-8	Screw – Hex. Hd.	4	7	1
321-13	Screw – Hex. Hd.	8	11	2
321-13	Screw – Hex. Hd.	1	17	1
321-30	Screw – Hex. Hd.	2	34	1
322-3	Screw – Hex Hd.	5	11	2
322-3	Screw – Hex. Hd.	8	22	2
322-3	Screw – Hex. Hd.	1	24	2

*Not Illustrated

TORO PART NUMBER INDEX (Cont.)

Part No.	Description	Pg. No.	Ref. No.	Qty.
322–9	Screw – Hex. Hd.	8	21	2
322–43	Screw – Hex. Hd.	2	56	1
323–29	Screw – Hex. Hd.	1	27	1
3229–11	Screw – Carriage	2	40	3
3230–18	Screw – Carriage	3	5	3
3230–22	Bolt – Carriage	3	21	2
3234–25	Screw – Hex. Flange Hd.	2	51	1
3241–7	Screw – Set, Sq. Hd.	1	10	1
3245–41	Screw – Set	1	9	1
3250–32	Screw – Phillips	6	28	2
3256–14	Washer	6	31	4
3256–22	Washer	5	1	2
3256–22	Washer	1	2	9
3256–22	Washer	3	14	6
3256–22	Washer	3	16	2
3256–22	Washer	6	27	2
3256–23	Washer	5	26	1
3256–24	Washer	2	53	1
3256–49	Washer	6	14	1
3256–67	Washer	2	43	2
3256–68	Washer	3	24	2
3274–31	Screw – Button Hd.	8	6	1
3274–31	Screw – Button Hd.	1	20	1
3290–320	Pushnut	8	2	1
3290–456	Washer – Belleville	5	12	5
3290–456	Washer – Belleville	3	23	2
3290–456	Washer – Belleville	2	35	1
3290–474	Pushnut	6	23	8
3296–2	Nut – Lock	7	13	2
3296–2	Nut – Lock	2	46	3
3296–12	Nut – Lock	6	21	4
3296–29	Nut – Lock	1	6	3
3296–29	Nut – Lock	5	19	5
3296–29	Nut – Lock	3	22	2
3296–29	Nut – Lock	8	23	6
3296–42	Nut – Lock	5	2	4
3296–42	Nut – Lock	1	4	22
3296–42	Nut – Lock	8	9	3
3296–42	Nut – Lock	3	15	6
3296–56	Nut – Lock	4	3	13
32105–8	Screw – Hex Hd.	6	17	4
32105–8	Screw – Hex. Hd.	2	38	3
32105–15	Screw – Hex. Hd.	2	37	7
32111–8	Nut – Acorn	8	8	2
32112–11	Pushnut	3	13	2
32112–11	Pushnut	2	30	1
32112–14	Pushnut	5	16	2
32128–10	Nut – Flange Lock	2	47	2
32144–27	Screw	6	29	3
32144–27	Screw – Self Tap	7	10	3
32144–101	Screw – Phillips Pan Hd.	7	20	2
32144–111	Screw – Hex Hd.	6	15	1
32144–112	Screw	6	5	3
32149–1	Nut – Keps	3	4	3
32149–2	Nut – Keps	2	39	3
32152–2	Nut – Lock	1	23	1
32152–8	Nut – Lock	5	27	1

OPTIONAL EQUIPMENT

Snow Cab Kit ..... Part No. 88–0600

*Not Illustrated

PRODUCT CHANGES

In an effort to make improvements available to TORO owners as quickly as possible, minor changes are incorporated into Toro's products from time to time that do not become immediately shown in the Parts Catalog. If such a change has been made in your unit, which is not reflected in your manual, see your TORO Distributor or his Authorized TORO Service Dealer for information and part numbers.

COUNTRIES OTHER THAN THE UNITED STATES OR CANADA

Customers who have purchased TORO products exported from the United States or Canada should contact their Toro Distributor (Dealer) to obtain guarantee policies for your country, province or state. If for any reason you are dissatisfied with your Distributor's service or have difficulty obtaining guarantee information, contact the TORO importer. If all other remedies fail, you may contact us at The Toro Company.

MAINTENANCE RECORD

Date								

Compliance with Radio Interference Regulations Certified.
Certifie Conforme au Reglement sur le Brouillage Radioelectrique.

Litho in U.S.A.

MAINTENANCE RECORD

Date								

MAINTENANCE RECORD

Date								