FORM NO. 3316–345

TORO®

MODEL NO. 38555–4900001 & UP

PARTS CATALOG

1028 SNOWTHROWER

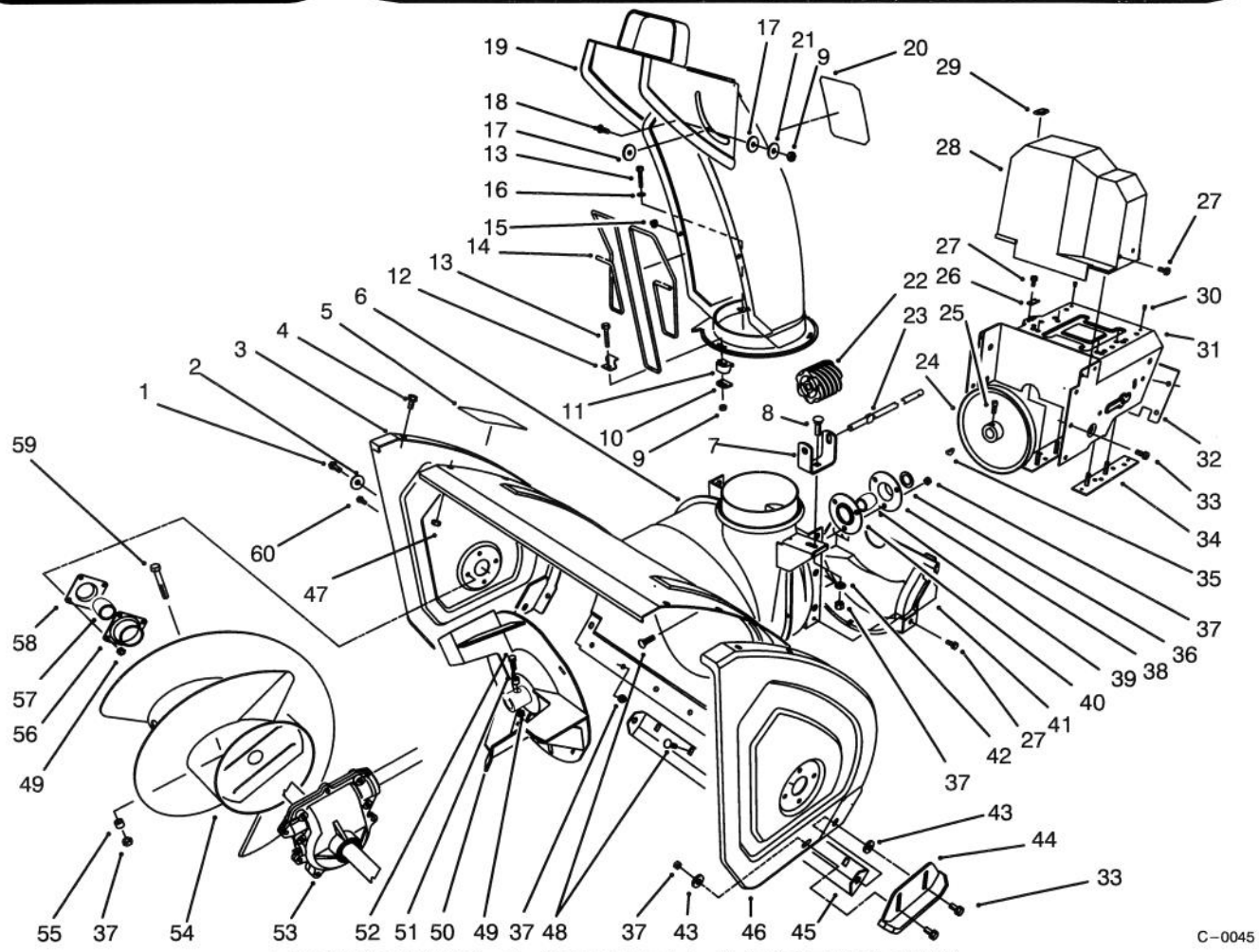

HOUSING & CHUTE ASSEMBLY

Ref. No.	Part No.	Description	No. Used
1	323–6	Screw – Hex Hd.	2
2	3–0750	Washer – Retaining	2
3	66–7821	Plate – Side R.H.	1
4	3234–28	Screw – Hex Flange Hd.	12
5	53–7670	Decal – Danger Auger	1
6	62–0721	Housing – 28"	1
7	63–2180	Bracket – Gear	1
8	3230–2	Bolt – Carriage	1
9	3296–2	Nut – Lock	4
10	63–2670	Plate – Chute Retainer	3
11	62–1430	Retainer – Chute	3
12	63–3130	Clip – Chute Guard	1
13	3274–13	Screw – Machine	3
14	63–3020	Guard – Chute	1
15	3290–326	Nut – Push	2
16	3256–14	Washer – Flat	3

Ref. No.	Part No.	Description	No. Used
17	63–2900	Washer – Plastic	2
18	32122–32	Screw	1
19	62–0840	Chute Assembly	1
20	53–7660	Decal – Danger Chute	1
21	3256–61	Washer – Flat	1
22	62–0820	Gear – Worm	1
23	62–1720	Rod – Chute Gear	1
24	62–1300	Pulley – Impeller	1
25	3242–4	Screw – Set Sq. Hd.	2
26	63–2300	Retainer – Cable	1
27	32144–4	Screw – Hex Flange Hd.	6
28	63–2080	Cover – Belt (Upper)	1
29	63–3290	Cover – Cable	1
30	3269–23	Rivet	4
31	66–6980	Frame – Engine	1
32	62–1440	Cover – Engine Frame	1

© The TORO Company –1993
All Rights Reserved

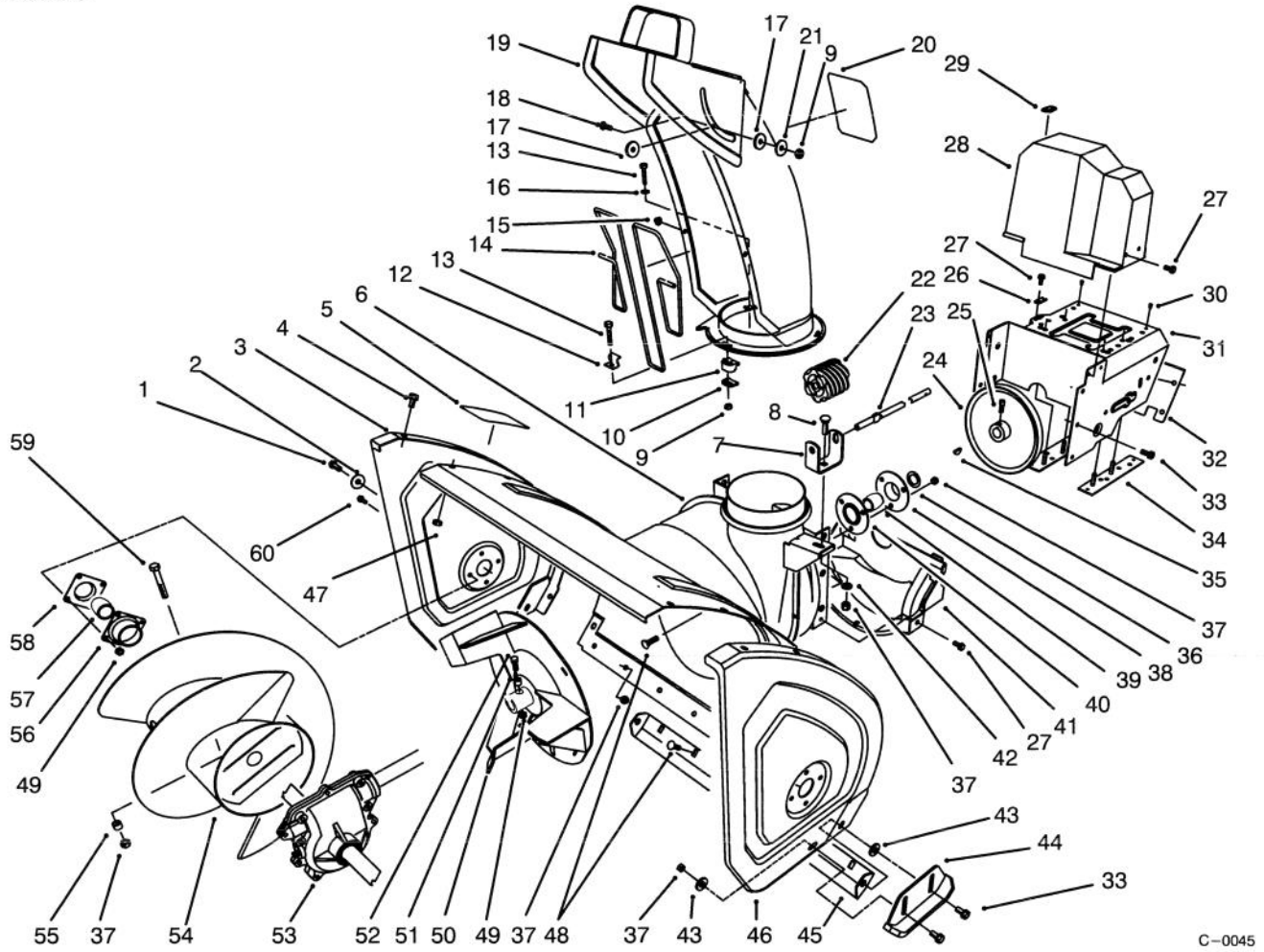

HOUSING ASSEMBLY (Continued)

Ref. No.	Part No.	Description	No. Used
33	3234–5	Screw – Hex. Washer Hd.	10
34	68–4110	Plate – Engine Stud L.H.	1
*	68–4100	Plate – Engine Stud R.H.	1
35	3257–23	Key – Woodruff	1
36	252–80	Washer – Thrust	1
37	3296–29	Nut – Lock	12
38		Flange – Bearing (Rear)	1
39	63–3450	Bearing – Impeller	1
40		Flange – Bearing (Front)	1
41	68–8410	Cover – Belt (Lower)	1
42	3256–23	Washer – Flat	1
43	52–2861	Washer	4
44	74–1440	Skid Assembly	2
45	66–7761	Blade – Scraper	1
46	66–7831	Plate – Side L.H.	1
47	3296–47	Nut – Lock	12
48	3230–23	Screw – Carriage	10

Ref. No.	Part No.	Description	No. Used
49	3296–42	Nut – Lock	10
50	66–7920	Impeller	1
51	66–8010	Spacer	2
52	321–44	Screw – Hex. Hd.	2
53	74–1561	Auger Gearbox Assembly	1
54	68–7451	Auger – R.H.	1
*	68–7461	Auger – L.H.	1
55	25–5090	Spacer – Auger Hub	2
56	20–0990	Flange – Bearing (Inner)	2
57	20–0980	Bearing – Auger	2
58	20–1000	Flange – Bearing (Outer)	2
59	17–7030	Bolt – Auger	2
60	321–3	Screw – Hex Hd.	8
*	12–8789	Impeller Bearing Assembly (Incl. Ref. #38–40)	1
*	12–8949	Loose Parts	1

*Not Illustrated

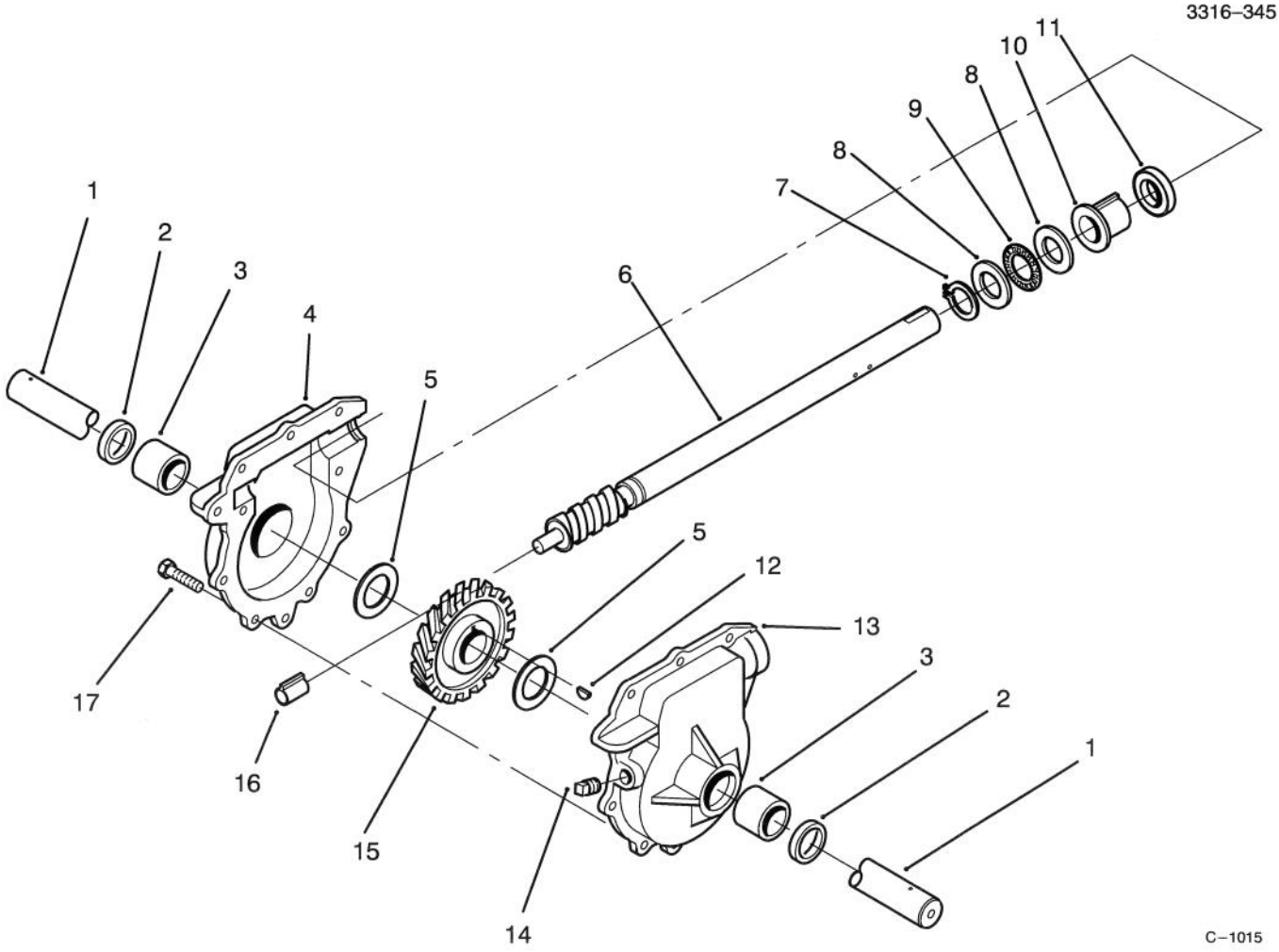

28" AUGER GEARCASE ASSEMBLY NO. 74–1561

Ref. No.	Part No.	Description	No. Used
1	62–1531	Shaft – Auger (28")	1
2	7–0045	Seal – Oil	2
3	256–237	Bushing – Sleeve	2
4	74–1580	Gearcase Assembly – R.H. (Incl. Ref. # 2–3)	1
5	252–71	Bearing – Thrust	2
6	66–7811	Shaft – Impeller	1
7	32151–33	Ring – Snap	1
8	252–78	Washer – Thrust	2
9	252–76	Bearing – Thrust	1

Ref. No.	Part No.	Description	No. Used
10	37–6560	Bushing – Input	1
11	253–149	Seal – Input	1
12	3257–10	Key – Woodruff	1
13	74–1570	Gearcase Assembly – L.H. (Incl. Ref. # 2–3)	1
14	281–1	Plug – Pipe Sq. Hd.	1
15	62–0120	Gear – Helical	1
16	62–1150	Bushing – Worm	1
17	32144–110	Screw – Hex Washer Hd.	9
*	505–129	Sealant – 100g Tube	1

*Not Illustrated

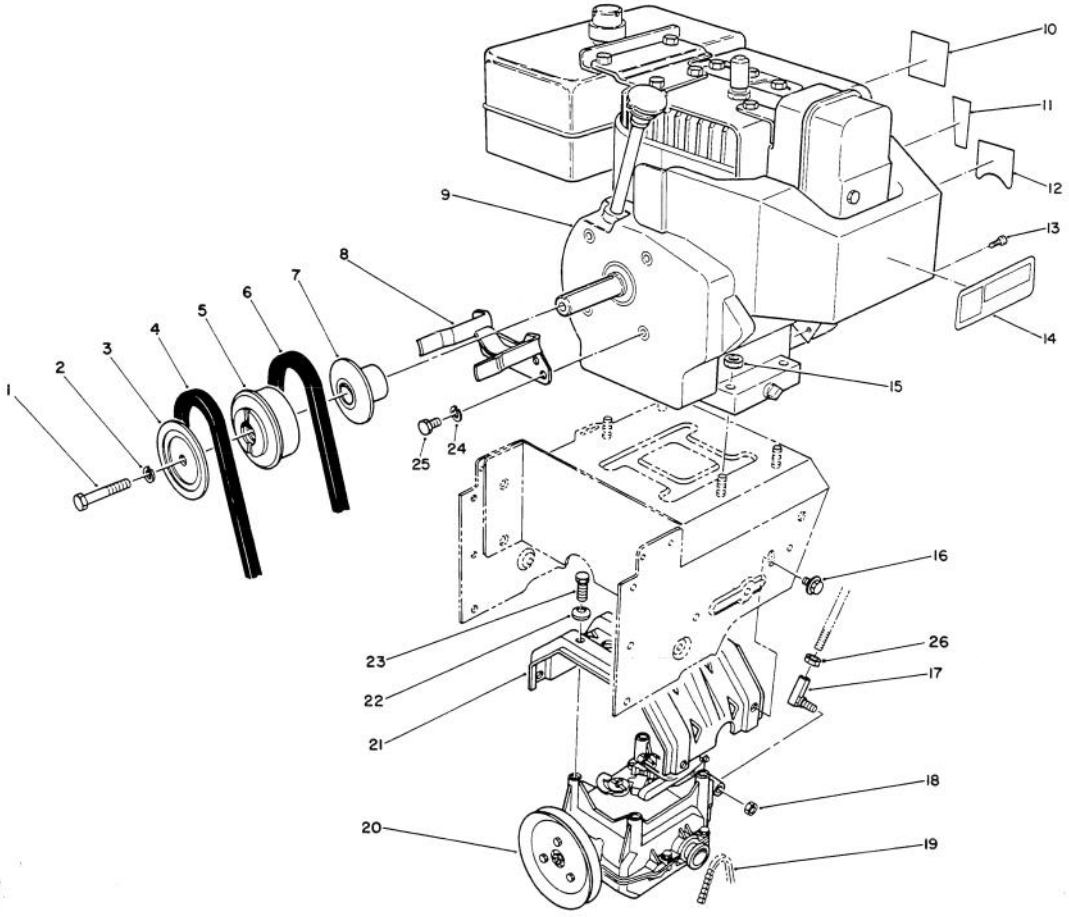

C–0048

ENGINE ASSEMBLY

Ref. No.	Part No.	Description	No. Used
1	3212–8	Screw – Hex. Hd.	1
2	3253–6	Washer – Lock	1
3	62–0940	Sheave Half – Impeller	1
4	63–2962	Belt – Impeller	1
5	62–0930	Hub – Sheave	1
6	63–2951	Belt – Traction	1
7	62–0920	Sheave Half – Traction	1
8	68–7510	Guide – Belt	1
†9		Engine – Tecumseh Model HMSK100–159227T	1
10	62–5760	Decal – Primer	1
11	63–3190	Decal – Throttle	1
12	63–2410	Decal – Choke	1
13	32144–4	Screw	1

Ref. No.	Part No.	Description	No. Used
14	63–2310	Decal – Hot Surface	1
15	32128–20	Nut – Lock	4
16	3234–7	Screw – Hex Flange Hd.	4
17	63–2640	Joint– Ball	1
18	3296–39	Nut – Lock	1
19	63–2930	Chain – Drive	1
20	66–8030	Transmission Assembly	1
21	63–2990	Frame – Transmission	1
22	3290–461	Washer – Belleville	4
23	11–0590	Screw – Hex Hd.	4
24	3253–4	Washer – Lock	2
25	3210–1	Screw – Hex Hd.	2
26	3220–3	Nut – Jam	1

†Obtain from your local Tecumseh Dealer.

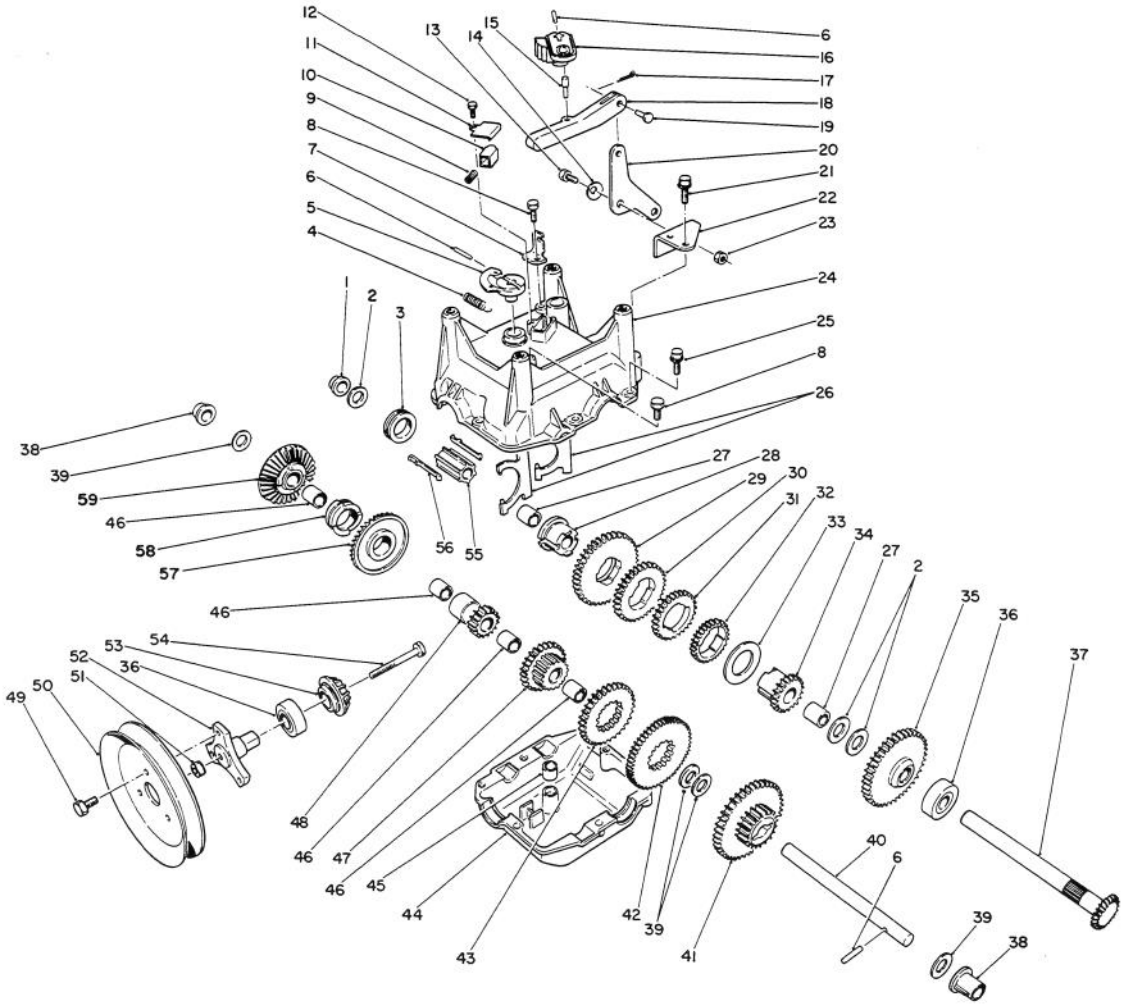

TRANSMISSION ASSEMBLY NO. 66-8030

Ref. No.	Part No.	Description	No. Used
1	62-1180	Bushing - Output (Flange)	1
2	252-59	Washer - Thrust	3
3	62-0430	Collar - Shift (Speed)	1
4	63-2920	Spring - Extension (F/R Return)	1
5	62-0880	Lever - Direction Shift	1
6	32121-106	Pin - Coil	3
7	62-1740	Bracket - Cable	1
8	32144-4	Screw - Self Tapping	2
9	63-2890	Spring - Compression (Detent)	1
10	62-1020	Button - Detent	1
11	62-1690	Cover - Detent	1
12	32104-71	Screw - Pan Hd.	1
13	63-3410	Bolt - Shoulder	1
14	3290-477	Washer - Curved	1
15	63-2190	Pin - Gearshift Link	1
16	62-0870	Lever - Gear Shift	1
17	3272-1	Pin - Cotter	1
18	62-0860	Link - Gearshift	1
19	283-3	Pin - Clevis	1
20	63-2600	Bellcrank	1
21	32104-95	Screw - Hex Washer Hd.	2

Ref. No.	Part No.	Description	No. Used
22	62-1190	Bracket - Bellcrank	1
23	3296-42	Nut - Lock	1
24	62-0490	Gear Case - Upper	1
25	32144-86	Screw - Hex Washer Hd.	6
26	62-1040	Yoke-Shift	2
27	62-1350	Bushing - Output	2
28	62-0320	Sleeve	1
29	62-0240	Gear - 45T	1
30	62-0220	Gear - 34T	1
31	62-0200	Gear - 27T	1
32	62-0250	Gear - 29T	1
33	63-2280	Washer - Thrust	1
34	62-0340	Sleeve - Gear 19T	1
35	62-0370	Gear - 41T	1
36	38-7820	Bearing - Ball	2
37	62-1080	Shaft - Output	1
38	62-1170	Bushing - Flange	2
39	257-10	Washer - Thrust	4
40	62-0330	Shaft - Intermediate	1
41	62-0360	Gear - Compound 19T/41T	1
42	62-0260	Gear - 51T	1
43	62-0210	Gear - 33T	1
44	62-0480	Gear Case - Lower	1

3316–345

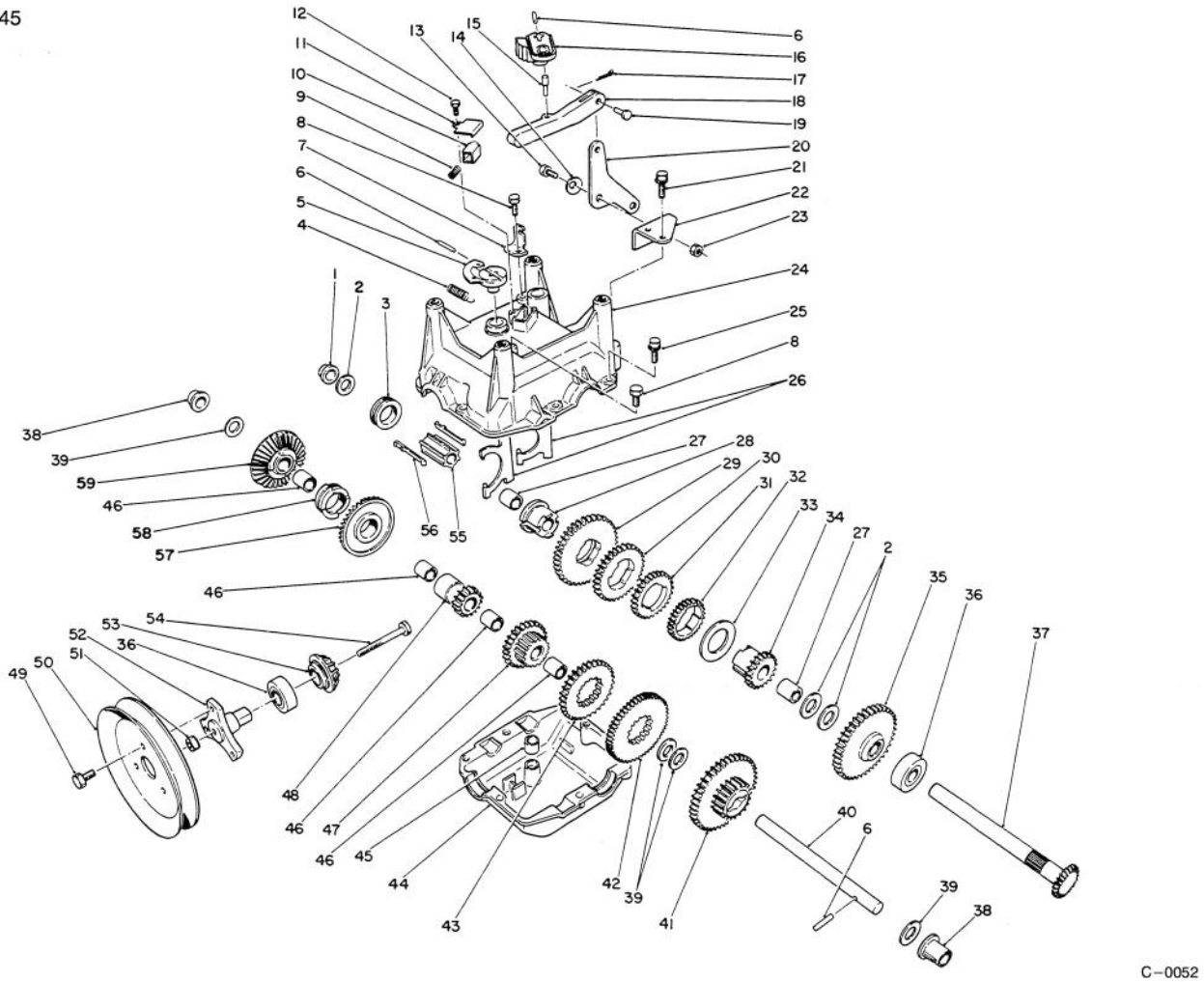

C–0052

TRANSMISSION ASSEMBLY NO. 66–8030 (Continued)

Ref. No.	Part No.	Description	No. Used
45	29–9570	Bushing – Yoke	1
46	62–1160	Bushing – Intermediate	4
47	68–4310	Gear – 26T	1
48	62–0500	Gear – 15T	1
49	12–3270	Screw	3
50	62–1310	Pulley – Traction	1
51	32128–32	Nut – Flange Lock	1
52	62–0380	Hub – Pulley	1
53	62–0350	Pinion – Bevel 19T	1

Ref. No.	Part No.	Description	No. Used
54	321–15	Screw – Hex Hd.	1
55	68–4320	Sleeve – Shift	1
56	62–0310	Key – Shift	2
57	67–5870	Gear – Bevel 36T	1
58	67–5880	Collar – Shift	1
59	13–3559	Gear – Bevel Reverse 36T (Incl. Ref. #46)	1
*	505–101	Grease – 14.5 oz. Cartridge	1

*Not Illustrated

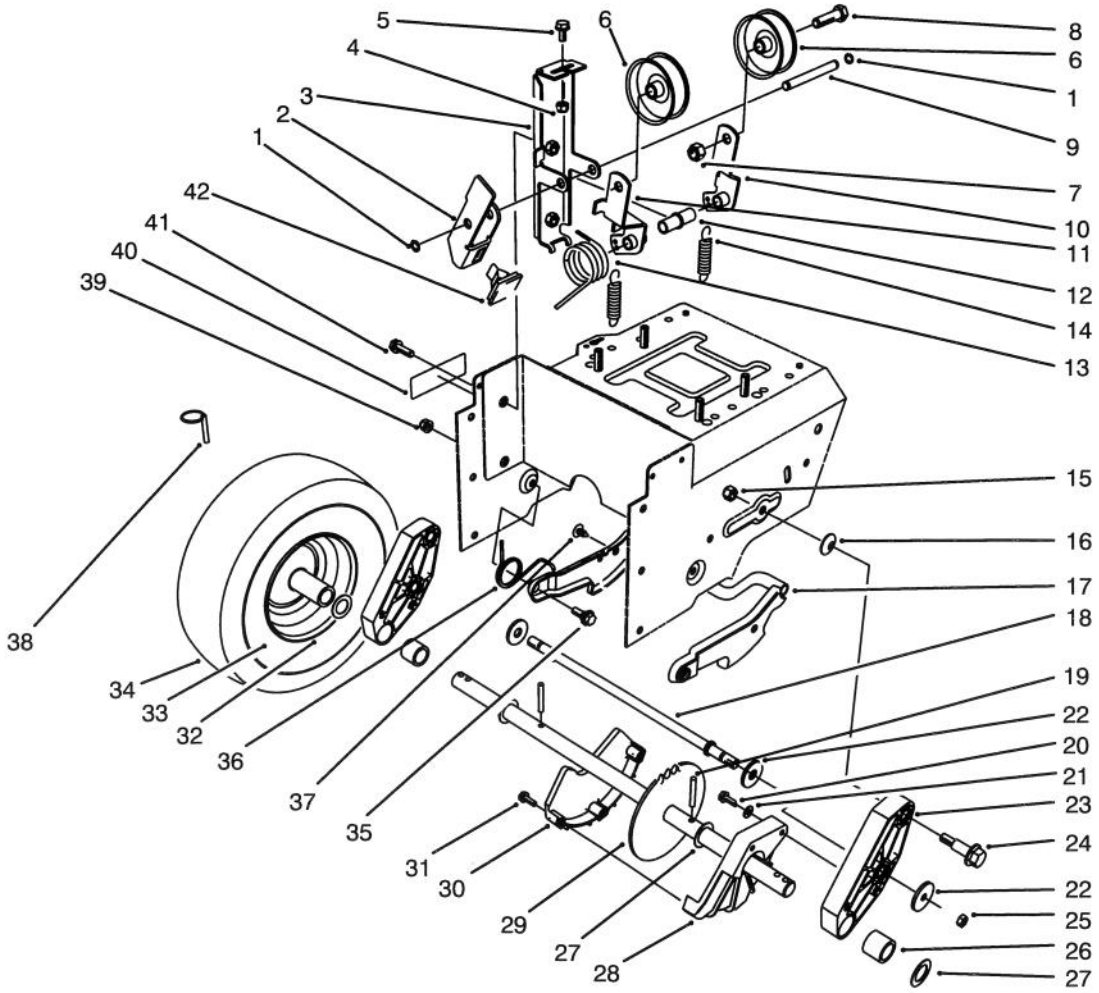

C–0053

TRACTION DRIVE ASSEMBLY

Ref. No.	Part No.	Description	No. Used
1	32120–46	Ring – Retaining	2
2	63–2820	Arm – Brake	1
3	63–2850	Bracket – Idler Arm	1
4	3296–42	Nut – Lock	1
5	3234–13	Screw – Hex. Hd.	1
6	3–4244	Pulley – Idler	2
7	3296–59	Nut – Lock	2
8	323–7	Screw – Hex Hd.	2
9	62–0970	Pin – Idler	1
10	62–1260	Arm – Traction Idler	1
11	62–1280	Arm – Impeller Idler	1
12	62–1210	Bushing – Idler	1
13	63–2881	Spring – Torsion	1
14	63–2870	Spring – Extension	2
15	3296–39	Nut – Lock	2
16	3290–461	Washer – Belleville	2
17	62–0470	Latch – Arm	1
18	66–7720	Rod – Latch	1
19	32121–9	Pin – Roll	2
20	32144–4	Screw – Hex Flange Hd.	2
21	3256–1	Washer – Flat	2
22	63–3340	Washer	4

Ref. No.	Part No.	Description	No. Used
23	66–7740	Pivot Arm Assembly (Incl. Ref. # 26)	2
24	62–1330	Bolt – Shoulder	2
25	3296–23	Nut – Lock	2
26	63–2250	Bushing – Axle	2
27	252–80	Washer – Thrust	4
28	62–1010	Guard – Chain L.H.	1
29	63–2112	Axle Assembly	1
30	62–1000	Guard – Chain R.H.	1
31	32104–121	Screw – Hex Flange Hd.	3
32	241–127	Rim – Wheel	2
33	232–48	Tube – Inner	2
34	231–123	Tire	2
35	5–2490	Bolt – Shoulder	2
36	63–2740	Spring – Torsion	1
37	3290–476	Fastener – Panel	1
38	3290–243	Pin – Klik	2
39	3296–47	Nut – Lock	2
40	63–3470	Decal – Warning	1
41	3234–7	Screw – Hex Flange Hd.	2
42	66–8060	Pad – Brake	1

*Not Illustrated

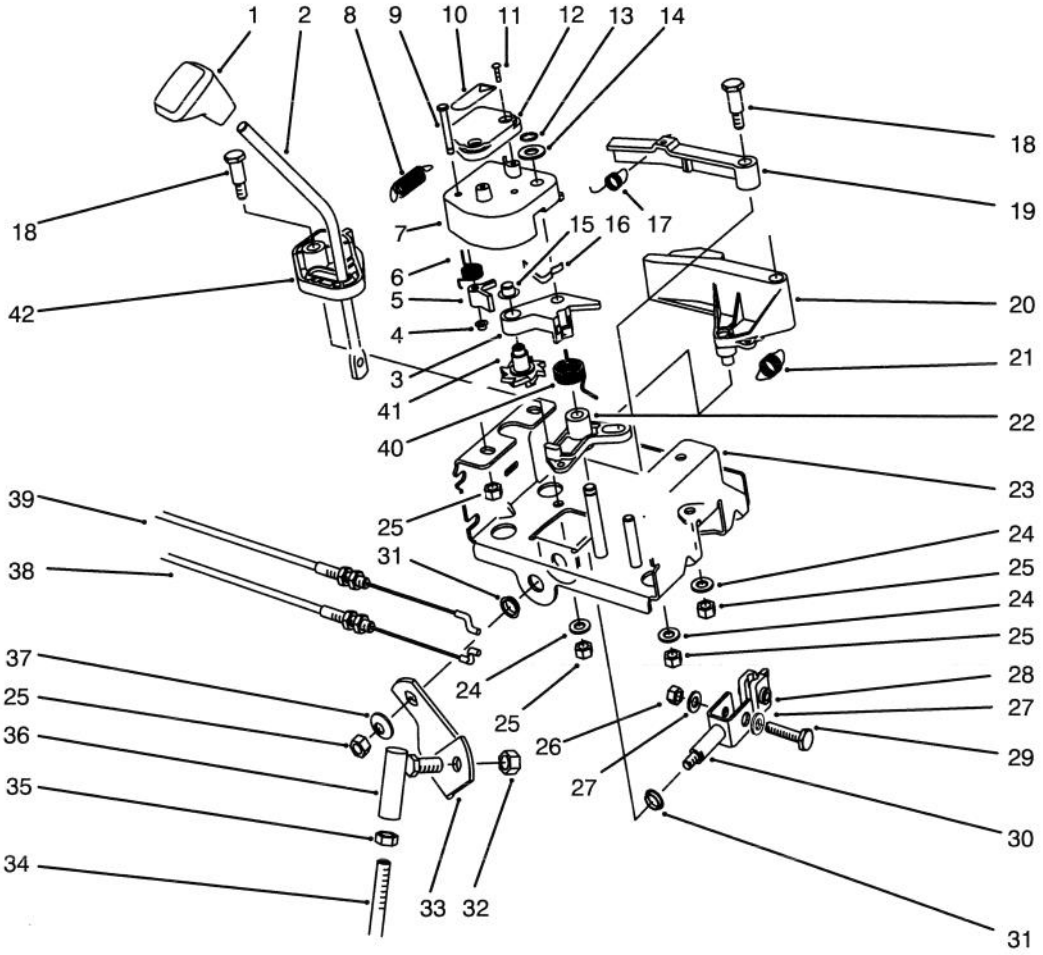

TRACTION LINKAGE ASSEMBLY

Ref. No.	Part No.	Description	No. Used
1	62–1290	Knob – Shift	1
2	67–9240	Rod – Shift (Upper)	1
3	62–1110	Lever – Index Wheel	1
4	3290–422	Nut – Push	1
5	62–0180	Tang – Index	1
6	62–1650	Spring – Torsion	1
7	62–1100	Lever – Latch	1
8	63–2220	Spring – Extension	1
9	63–2610	Pin – Tang	1
10	63–2480	Decal – #2	1
11	32104–118	Screw – Pan Hd.	2
12	62–1140	Cover – Latch	1
13	32120–46	Ring – Retaining	1
14	257–9	Washer – Thrust	1
15	3290–320	Nut – Push	1
16	62–1710	Spring – Flat	1
17	63–2240	Spring – Extension	1
18	63–2650	Screw – Shoulder	2
19	62–1700	Lever – Lockout	1
20	62–1130	Lever – Reverse	1
21	63–2230	Spring – Extension	1

Ref. No.	Part No.	Description	No. Used
22	62–1120	Lever – Reverse	1
23	63–2150	Frame – Control	1
24	3256–23	Washer – Flat	3
25	3296–29	Nut – Lock	7
26	3296–42	Nut – Lock	1
27	3256–1	Washer – Flat	2
28	67–9250	Retainer – Shift Rod	1
29	321–9	Screw – Cap Hex. Hd.	1
30	66–7730	Clevis	1
31	256–296	Bushing – Nyliner	2
32	3296–39	Nut – Lock	1
33	63–2630	Bracket – Shift	1
34	63–2830	Rod – Shift (Lower)	1
35	3220–3	Nut – Jam	1
36	63–2640	Joint – Ball	1
37	3290–456	Washer – Belleville	1
38	63–2210	Cable – Gearbox	1
39	63–2200	Cable – Latch	1
40	63–2270	Spring – Torsion	1
41	62–0170	Wheel – Index	1
42	62–1470	Base – Lockout	1

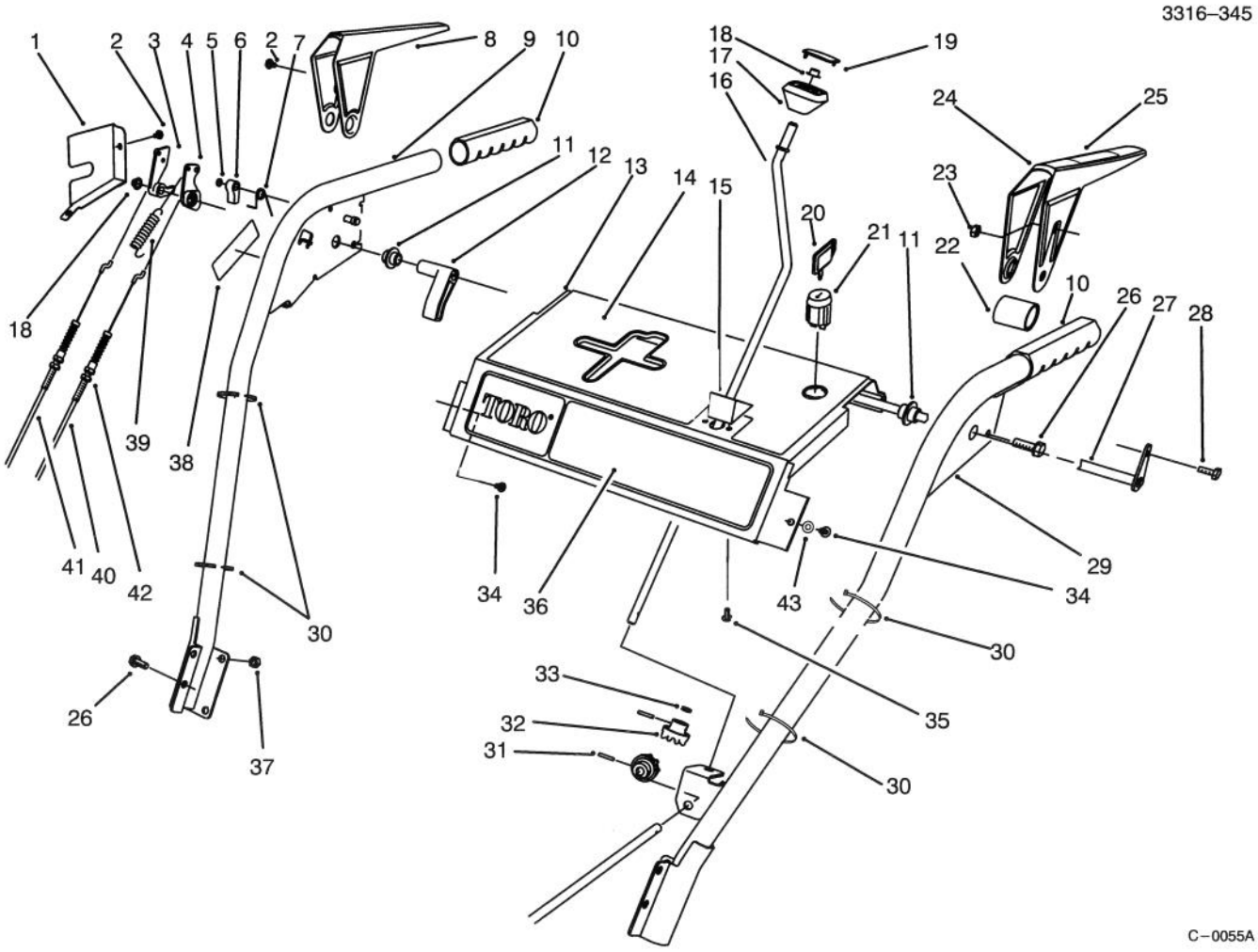

HANDLE ASSEMBLY

Ref. No.	Part No.	Description	No. Used
1	63–2170	Cover – Lever Lock	1
2	2210–250	Screw	3
3	62–0300	Tang – Locking	1
4	62–0290	Cam – Release	1
5	32151–66	Ring – Retaining	1
6	62–0280	Latch – Lock	1
7	63–2910	Spring – Torsion	1
8	62–1050	Lever – Impeller	1
9	62–1381	Handle – R.H.	1
10	66–7850	Handlegrip	2
11	62–1070	Bushing – Lever	2
12	62–1640	Lever – Trip	1
13	66–8100	Panel – Control	1
14	63–2550	Decal – Panel Top	1
15	62–1490	Plate – Guide	1
16	63–2160	Rod – Chute Crank	1
17	62–1320	Knob – Chute Control	1
18	3290–320	Nut – Push	2
19	62–1520	Cover – Knob	1
20	63–8360	Key – Switch	1
21	40–5940	Switch – On/Off	1
22	63–3380	Spacer – Traction Lever	1

Ref. No.	Part No.	Description	No. Used
23	3296–2	Nut – Lock	1
24	62–1060	Lever – Traction	1
25	63–3050	Decal – Lever	1
26	3234–7	Screw – Hex Flange Hd.	6
27	63–2030	Rod – Cross	1
28	3290–359	Screw	1
29	66–8091	Handle – L.H.	1
30	3290–378	Tie – Cable	4
31	32121–50	Pin – Roll	2
32	62–1460	Gear – Universal	2
33	62–1230	Washer – Rubber	1
34	32104–76	Screw – Self Tapping	2
35	32104–118	Screw – Pan Hd.	2
36	88–0590	Decal – Panel Front	1
37	3296–47	Nut – Lock	4
38	63–3470	Decal – Warning	1
39	88–0810	Spring – Extension	1
40	63–2710	Cable – Traction	1
41	63–2700	Cable – Impeller	1
42	3296–42	Nut	4
43	3256–14	Washer – Flat	2
*	63–3420	Harness – Wire	1

*Not Illustrated

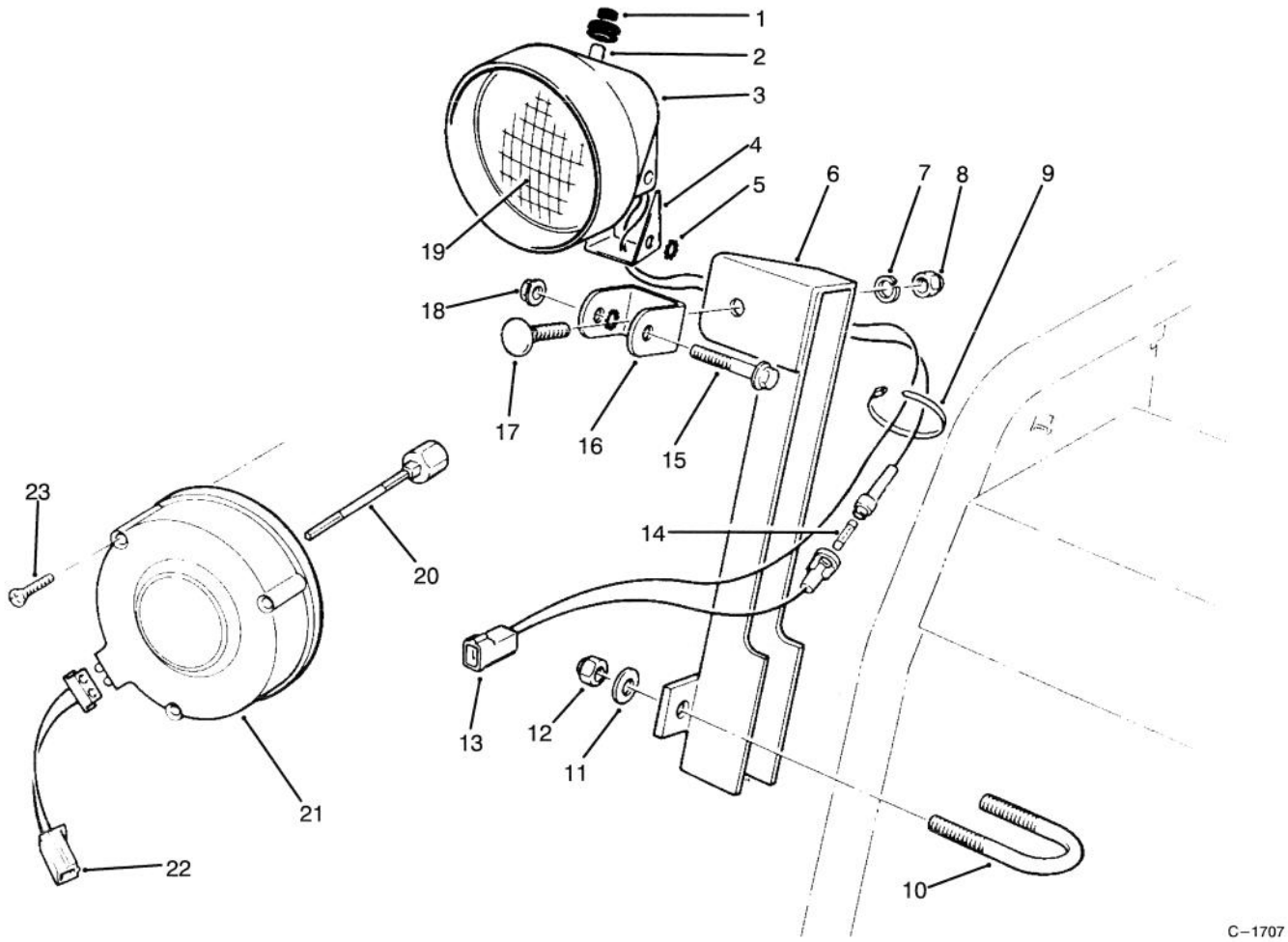

LIGHT ASSEMBLY NO. 66–7930

Ref. No.	Part No.	Description	No. Used
1	218–473	Boot – Switch	1
2	218–553	Switch Assembly	1
3	218–552	Bucket – Headlamp	1
4	218–554	Bracket	1
5	3255–8	Washer – Lock	2
6	68–7110	Mount – Lamp	1
7	3253–21	Washer – Lock	1
8	3217–7	Nut – Hex.	1
9	3290–378	Tie Wrap	2
10	68–7140	Bolt – U	1
11	3256–23	Washer – Flat	2
12	3296–29	Nut – Lock	2
13		Wire Assembly	1
†14		Fuse – 7–1/2 Amp.	1

Ref. No.	Part No.	Description	No. Used
15	322–13	Screw – Hex. Flange Hd.	1
16	218–556	Bracket – U	1
17	3231–2	Bolt – Carriage	1
18	32128–35	Nut – Flange Lock	1
19	218–16	Bulb – Sealed Beam	1
20	2210–268	Shaft – Alternator 3"	1
*	2210–288	Shaft – Alternator 4"	1
21	2210–274	Alternator	1
22	2210–272	Connector – Light	1
23	2210–273	Screw – Self Tapping	3
*	2210–270	Tube – Centering	1
*	54–9871	Headlamp Assembly (Incl. Ref. #1–5, 7–8 & 13–19)	1

*Not Illustrated
†Obtain Locally

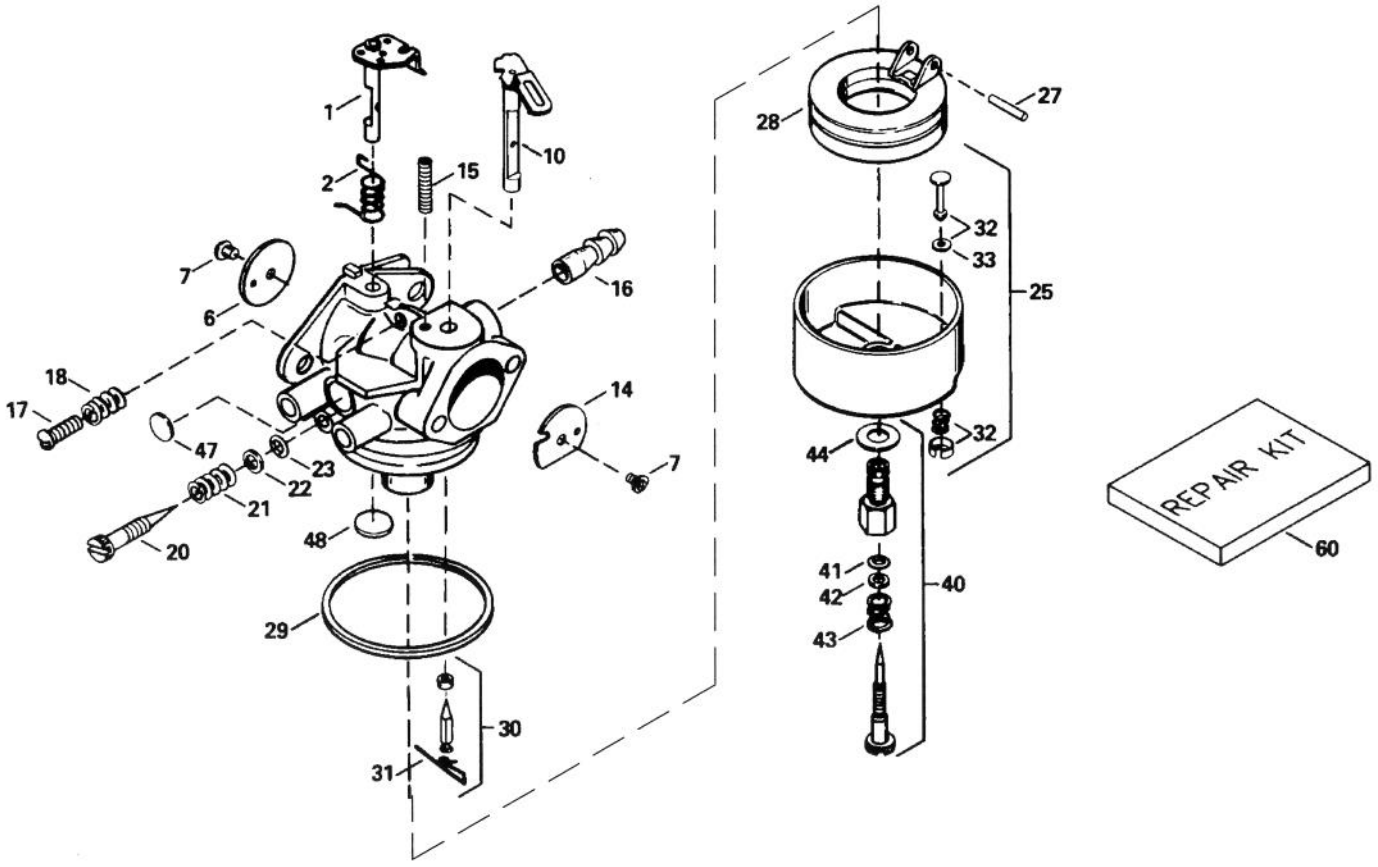

C–1704

CARBURETOR NO. 632370A

Ref. No.	Part No.	Description	No. Used
1	631776A	Throttle Shaft & Lever Assy.	1
2	631970	Throttle Return Spring	1
6	631778	Throttle Shutter	1
7	650506	Screw – Throttle & Choke Shutter	4
10	632112	Choke Shaft & Lever Assy	1
14	632174	Choke Shutter	1
15	630735	Choke Positioning Spring	1
16	632164	Fitting – Fuel	1
17	650417	Screw – Idle Speed	1
18	630766	Spring – Tension	1
20	632281	Screw – Idle Mixture	1
21	630766	Spring – Idle Mixture Screw	1
22	630739	Washer – Idle Screw	1
23	630740	O–Ring – Idle Screw	1
25	631951	Float Bowl (Incl. Ref.# 32 & 33)	1
27	631024	Shaft – Float	1
28	632019	Float	1
29	631028	O–Ring, Float Bowl to Body	1

Ref. No.	Part No.	Description	No. Used
30	631021	Inlet Needle, Seat & Spring Clip (Incl Ref.# 31)	1
31	631022	Spring Clip	1
32	27136A	Bowl Drain Assy. (Incl Ref.# 33)	1
33	27554	Drain Plunger – Gasket	1
40	632239	High Speed Mixture Screw Assembly	1
41	630740	O–Ring – High Speed Mixture Screw	1
42	630739	Washer, High Speed Mixture Screw	1
43	630738	Spring – Tension	1
44	27110	Washer – Bowl Nut	1
47	630748	Welch Plug – Idle Mixing	1
48	631027	Welch Plug – Vent	1
60	632347	Repair Kit (Incl. Ref. # 23, 27, 29–30, 41, 44, & 47–48)	1

TECUMSEH ENGINE MODEL HMSK100–159227T

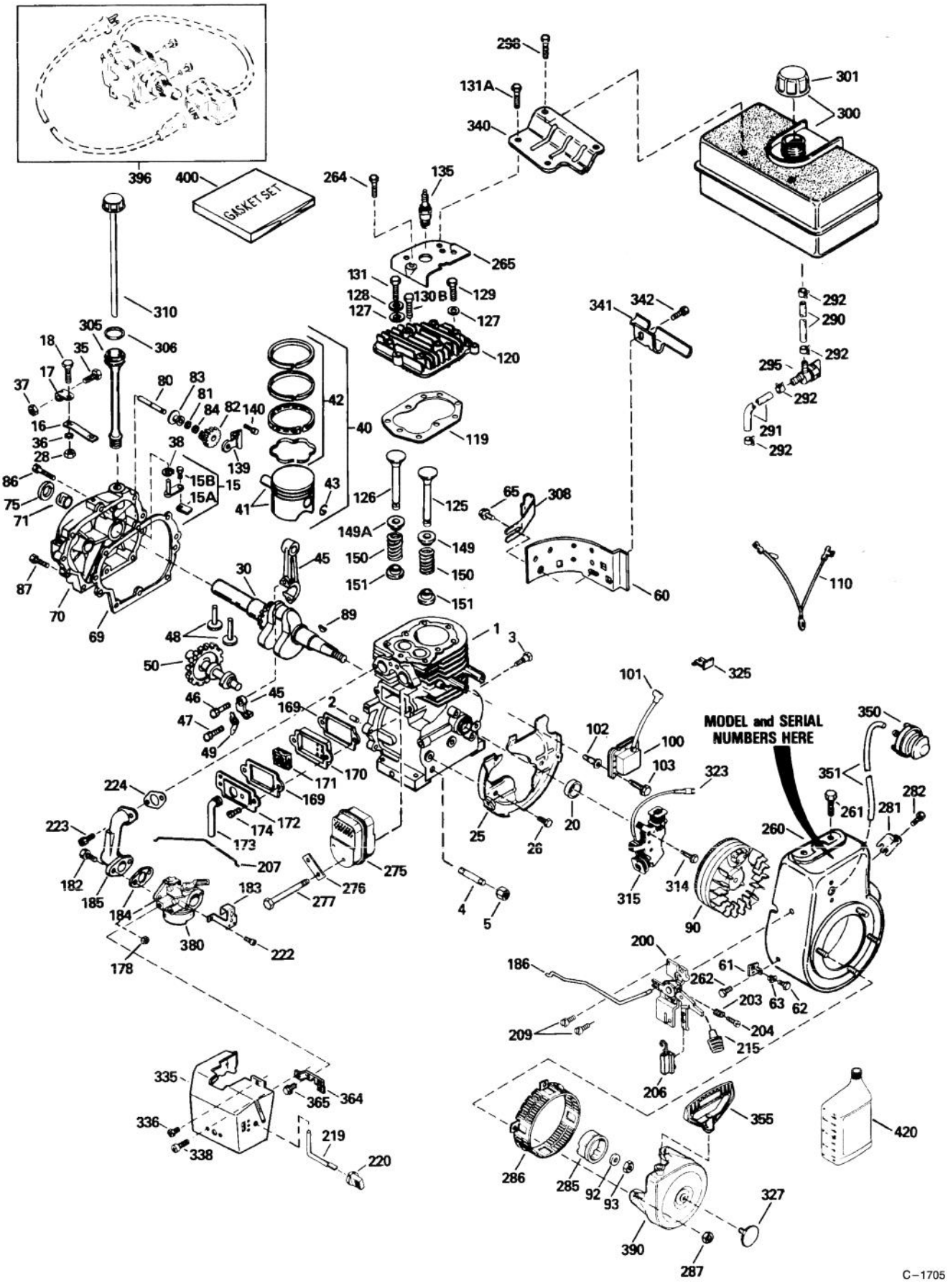

TECUMSEH ENGINE MODEL HMSK100–159227T

Ref. No.	Part No.	Description	No. Used
1	35371	Cylinder (Incl. ref.#2 & 20)	1
2	27652	Pin – Dowel	2
3	650820	Screw – Hex Hd. Shoulder	2
4	34171	Nipple – Pipe	1
5	30969	Cap – Oil Drain	1
15	30699C	Rod Assembly – Governor (Incl. ref.#15A & 15B)	1
15A	30700	Yoke – Governor	1
15B	650494	Screw – Fil. Hd. Sems	1
16	33454	Lever – Governor	1
17	29916	Clamp – Governor Lever	1
18	650548	Screw – Hex Washer Hd.	1
20	35319	Seal – Oil	1
25	35326	Baffle – Blower Housing	1
26	650561	Screw – Hex Washer Hd.	2
28	30322	Locknut	1
30	35571A	Crankshaft	1
35	29826	Screw – Hex Washer Hd.	1
36	29918	Washer – Ext. Tooth Lock	1
37	29216	Nut & Lockwasher – Keps	1
38	29642	Ring – Retaining	1
40	35776	Piston, Pin & Ring Assy. Std. (Includes ref.#41, 42 & 43)	1
	35777	Piston, Pin & Ring Assy. .010 oversize (Includes ref.#41, 42 & 43)	1
	35778	Piston, Pin & Ring Assy. .020 oversize (Includes ref.#41, 42 & 43)	1
41	35773	Piston & Pin Assembly Standard (Includes ref.#43)	1
	35774	Piston & Pin Assembly .010 oversize (Incl. ref.#43)	1
	35775	Piston & Pin Assembly .020 oversize (Incl. ref.#43)	1
42	35779	Ring Set, Piston (Standard)	1
	35780	Ring Set, Piston (.010 oversize)	1
	35781	Ring Set, Piston (.020 oversize)	1
43	35772	Retaining Ring, Piston Pin	2
45	35681	Rod Assembly – Connecting (Incl. ref.#46, 47 & 49)	1
46	650908	Bolt, Connecting Rod	1
47	650882	Bolt, Connecting Rod	1
48	34034	Lifter – Valve	2
49	35374	Dipper – Oil	1
50	35375	Camshaft (Mechanical Compression Release)	1
60	33273A	Extension – Blower Housing	1
61	34126	Bracket – Grommet Mounting	1
62	650760	Screw – Pan Hd. Taptite	1
63	28545	Grommet – Plastic	1
65	650128	Screw – Hex Head Sems	1
*69	35262	Gasket – Cylinder Cover	1
70	35376	Cover Assembly, Cylinder (Incl. ref.#71, 75 & 80)	1
71	35377	Bushing – Cylinder Cover	1
75	35319	Seal – Oil	1
80	31845	Shaft – Governor	1
81	30590A	Washer – Flat	1
82	35378	Gear – Governor (Incl. ref.#81)	1
83	30588A	Spool – Governor	1
84	29193	Ring – Retaining	1
86	650833	Screw, Hex Washer Powerlok	7
87	650832	Screw, Hex Washer Powerlok	1
89	32589	Key – Flywheel	1
90	611093	Flywheel (w/Ring Gear)	1
92	650880	Washer – Lock	1
93	650881	Nut – Flywheel	1
100	35135	Solid State Assembly	1
101	610118	Cover – Spark Plug	1
102	650872	Stud – Solid State Mounting	2
103	650814	Screw, Torx Hex Washer Sems	1
110	35253	Wire – Ground	1
*119	36451	Gasket – Cylinder Head	1
120	36449	Head – Cylinder	1
125	27878A	Valve – Exhaust, Standard (Incl. ref.# 151)	1
	27880A	Valve – Exhaust 1/32" oversize (Incl. ref.# 151)	1
126	34035	Valve – Intake, Standard (Incl. ref.# 151)	1
	34036	Valve – Intake 1/32" oversize (Incl. ref.# 151)	1
127	650691	Washer – Flat	5
128	650690	Washer – Belleville	3
129	650727	Screw – Special	2
130	6021A	Screw – Hex Flange Hd.	4
131	650694A	Screw – Hex Flange Hd.	3
131A	650713	Screw – Hex Hd.	2
135	35395	Spark Plug (RJ–19LM Resistor)	1
139	33369	Bracket – Governor Gear	1
140	650836	Screw – Hex Washer Hd.	2
149	27882	Cap – Upper Valve Spring	1
149A	35862	Seal Assy. – Intake Valve	1
150	27881	Spring – Valve	2
151	32581	Cap – Lower Valve Spring	2
*169	27896A	Gasket – Breather	2
170	28423	Body – Breather	1
171	28424	Element – Breather	1
172	28425	Cover – Breather	1

* Included in Gasket Set 36452 (Ref.# 400).

TECUMSEH ENGINE MODEL HMSK100-159227T

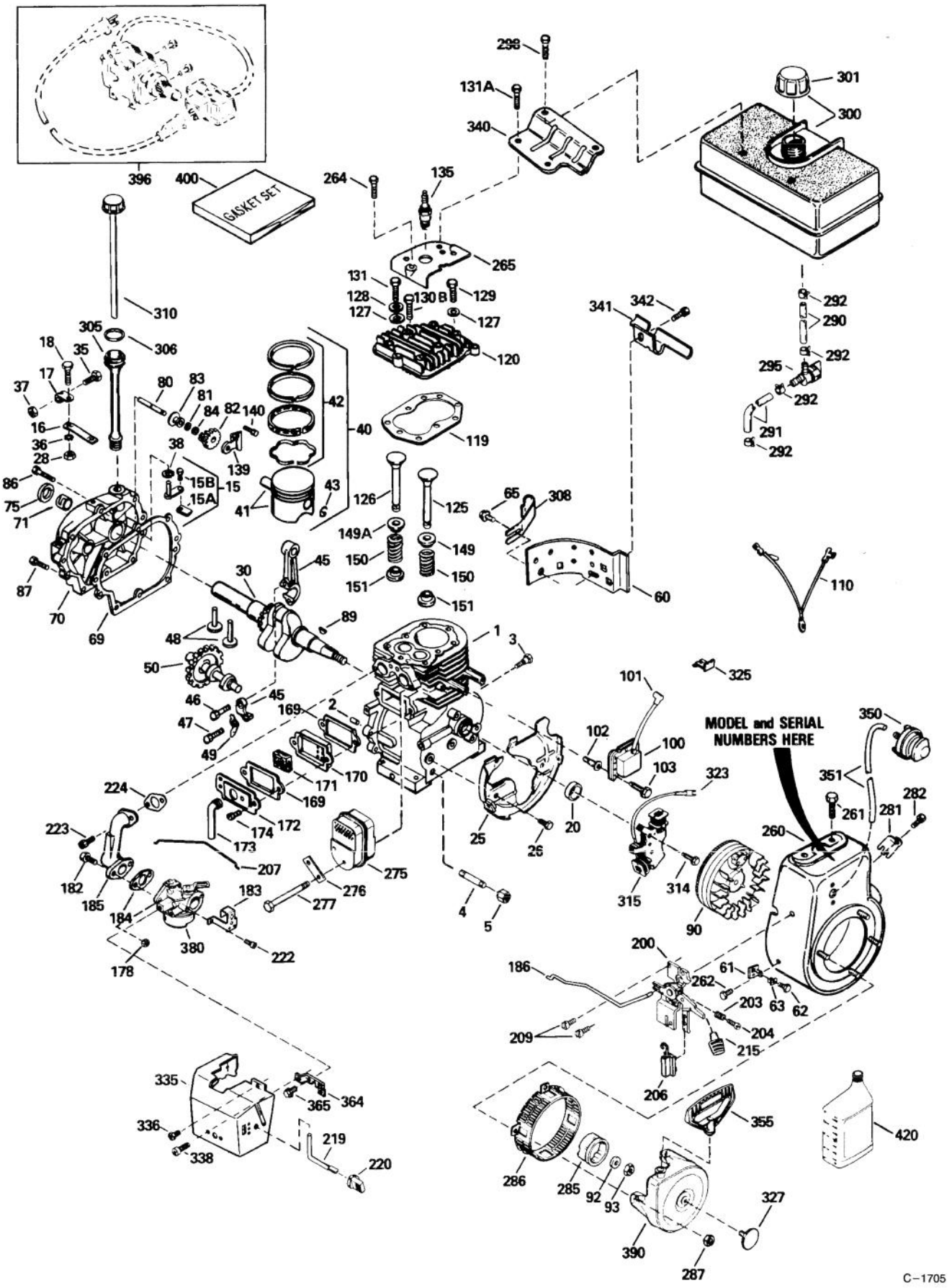

TECUMSEH ENGINE MODEL HMSK100–159227T (Continued)

Ref. No.	Part No.	Description	No. Used
173	35350	Tube – Breather	1
174	650128	Screw – Hex Hd. Sems	2
178	29752	Nut & Lockwasher	2
182	30088A	Screw – Fil. Hd. Sems	2
183	34587	Bracket – Choke	1
*184	33263	Gasket – Intake Pipe	1
185	33877	Pipe – Intake	1
186	34667	Link – Governor	1
200	34677	Bracket Assy. – Control (Incl. Ref.# 203, 204 & 206)	1
203	31342	Spring – Compression	1
204	650549	Screw – Fil Hd.	1
206	610973	Terminal Assembly	1
207	33878	Link – Governor to Throttle	1
209	650821	Screw – Hex Washer Hd.	2
215	35440	Knob – Control	1
219	34586	Rod – Choke	1
220	35438	Knob – Choke	1
222	28820	Screw – Fil. Hd. Sems	2
223	650378	Screw – Torx Fil Hd. Sems	2
*224	27915A	Gasket – Carburetor	1
260	35447A	Housing – Blower	1
261	650788	Screw – Hex Hd.	2
262	29747B	Screw – Hex Hd. Sems	2
265	33272B	Cover – Cylinder Head	1
275	35056	Muffler	1
276	31588	Plate – Lock	1
277	792093	Screw – Flange Hex Hd.	2
281	33013	Cover – Starter Hole	1
282	650760	Screw – Pan Hd. Taptite	1
285	35985A	Hub – Starter	1
286	35446	Screen – Starter	1
287	29752	Nut & Lockwasher	4
290	29774	Line – Fuel (8–1/4")	1
291	30705	Line – Fuel (16")	1
292	26460	Clamp – Fuel Line	4
295	35857	Valve – Fuel Shut–Off	1
298	650665	Screw – Hex Washer Hd.	2
300	34156A	Tank Assembly, Fuel (Incl. Ref.# 292 & 301)	1
301	35355	Cap – Fuel Tank	1
305	35554	Tube – Oil Fill	1
306	35499	O–Ring	1
308	35540	Clip – Fill Tube	1
310	36205	Dipstick – Oil	1
314	650873	Screw – Hex Hd. Sems	1
316	611111	Coil Assy., Alternator (18 Watt)	1
323	611118	Terminal	1
325	29443	Clip – Spring	1
327	35392	Plug – Starter	1
336	650765	Screw – Hex Washer Hd.	1
338	28942	Screw – Hex Washer Sems	2
340	34155	Bracket – Fuel Tank	1
341	34154	Plate – Fuel Tank Mounting	1
342	650561	Screw – Hex Washer Hd.	1
350	570682	Primer Assembly	1
351	32180C	Line – Primer	1
355	590574	Starter Handle – Mitten Grip	1
364	33377	Bracket – Carburetor Cover Mounting	1
365	650767	Screw – Hex Washer Hd.	2
380	632370A	Carburetor (Incl. Ref.# 184)	1
390	590672	Starter – Rewind	1
400	36452	Gasket Set (Incl. items marked *)	1
421	730226	SAE 5W30 4–Cycle Oil (Qt.)	1

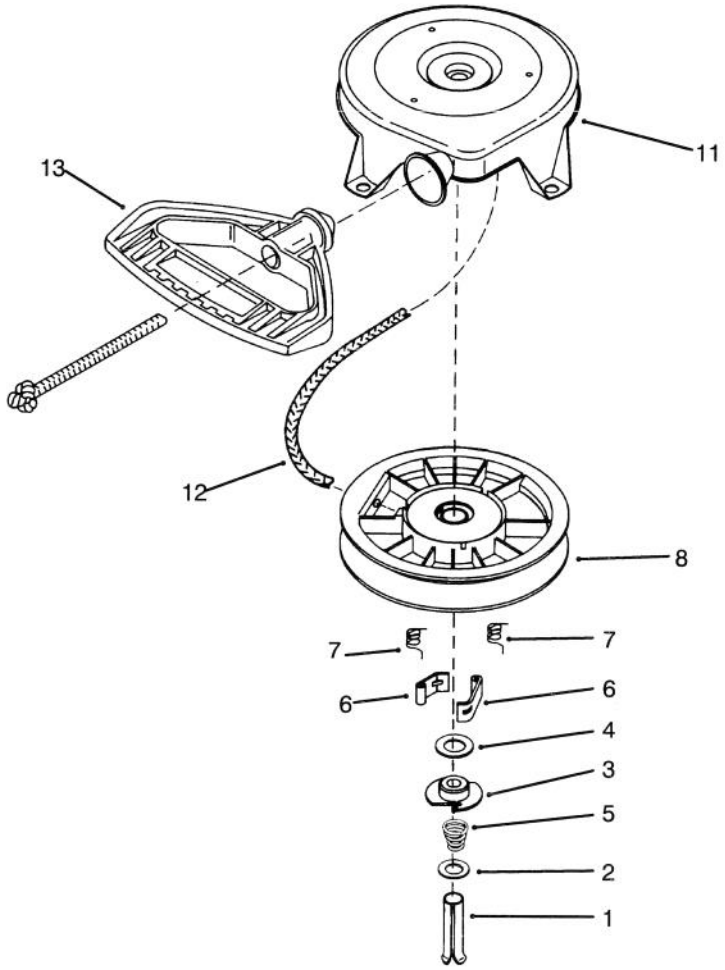

C–1706

REWIND STARTER NO. 590672

Ref. No.	Part No.	Description	No. Used
1	590599A	Pin – Spring (Incl. Ref.# 4)	1
2	590600	Washer	1
3	590679	Retainer	1
4	590601	Washer	1
5	590678	Spring – Brake	1
6	590680	Dog – Starter	2
7	590412	Spring – Dog	2

Ref. No.	Part No.	Description	No. Used
8	590682	Pulley & Rewind Spring Assy.	1
11	590684	Housing Assy. – Starter	1
12	590456	Rope – Starter (11/64" Dia. & 114" Long)	1
13	590574	Handle – Mitten Grip (Not included with Starter)	1

Litho In USA

TORO PART NUMBER INDEX

Part No.	Description	Pg. No.	Ref. No.	Qty.
3–0750	Washer – Retaining	1	2	2
3–4244	Pulley – Idler	7	6	2
5–2490	Bolt – Shoulder	7	35	2
7–0045	Seal – Oil	3	2	2
11–0590	Screw – Hex Hd.	4	23	4
12–3270	Screw	6	49	3
12–8789	Impeller Bearing Assembly	2	*	1
12–8949	Loose Parts	2	*	1
13–3559	Gear – Bevel Reverse 36T	6	59	1
17–7030	Bolt – Auger	2	59	2
20–0980	Bearing – Auger	2	57	2
20–0990	Flange – Bearing (Inner)	2	56	2
20–1000	Flange – Bearing (Outer)	2	58	2
25–5090	Spacer – Auger Hub	2	55	2
29–9570	Bushing – Yoke	6	45	1
37–6560	Bushing – Input	3	10	1
38–7820	Bearing – Ball	5	36	2
40–5940	Switch – On/Off	9	21	1
52–2861	Washer	2	43	4
53–7660	Decal – Danger Chute	1	20	1
53–7670	Decal – Danger Auger	1	5	1
54–9871	Headlamp Assembly	10	*	1
62–0120	Gear – Helical	3	15	1
62–0170	Wheel – Index	8	41	1
62–0180	Tang – Index	8	5	1
62–0200	Gear – 27T	5	31	1
62–0210	Gear – 33T	5	43	1
62–0220	Gear – 34T	5	30	1
62–0240	Gear – 45T	5	29	1
62–0250	Gear – 29T	5	32	1
62–0260	Gear – 51T	5	42	1
62–0280	Latch – Lock	9	6	1
62–0290	Cam – Release	9	4	1
62–0300	Tang – Locking	9	3	1
62–0310	Key – Shift	6	56	2
62–0320	Sleeve	5	28	1
62–0330	Shaft – Intermediate	5	40	1
62–0340	Sleeve – Gear 19T	5	34	1
62–0350	Pinion – Bevel 19T	6	53	1
62–0360	Gear – Compound 19T/41T	5	41	1
62–0370	Gear – 41T	5	35	1
62–0380	Hub – Pulley	6	52	1
62–0430	Collar – Shift (Speed)	5	3	1
62–0470	Latch – Arm	7	17	1
62–0480	Gear Case – Lower	5	44	1
62–0490	Gear Case – Upper	5	24	1
62–0500	Gear – 15T	6	48	1
62–0721	Housing – 28"	1	6	1
62–0820	Gear – Worm	1	22	1
62–0840	Chute Assembly	1	19	1
62–0860	Link – Gearshift	5	18	1
62–0870	Lever – Gear Shift	5	16	1
62–0880	Lever – Direction Shift	5	5	1
62–0920	Sheave Half – Traction	4	7	1
62–0930	Hub – Sheave	4	5	1
62–0940	Sheave Half – Impeller	4	3	1
62–0970	Pin – Idler	7	9	1
62–1000	Guard – Chain R.H.	7	30	1
62–1010	Guard – Chain L.H.	7	28	1
62–1020	Button – Detent	5	10	1
62–1040	Yoke–Shift	5	26	2
62–1050	Lever – Impeller	9	8	1
62–1060	Lever – Traction	9	24	1
62–1070	Bushing – Lever	9	11	2
62–1080	Shaft – Output	5	37	1
62–1100	Lever – Latch	8	7	1
62–1110	Lever – Index Wheel	8	3	1
62–1120	Lever – Reverse	8	22	1
62–1130	Lever – Reverse	8	20	1
62–1140	Cover – Latch	8	12	1
62–1150	Bushing – Worm	3	16	1
62–1160	Bushing – Intermediate	6	46	4
62–1170	Bushing – Flange	5	38	2
62–1180	Bushing – Output (Flange)	5	1	1
62–1190	Bracket – Bellcrank	5	22	1
62–1210	Bushing – Idler	7	12	1
62–1230	Washer – Rubber	9	33	1
62–1260	Arm – Traction Idler	7	10	1
62–1280	Arm – Impeller Idler	7	11	1
62–1290	Knob – Shift	8	1	1
62–1300	Pulley – Impeller	1	24	1
62–1310	Pulley – Traction	6	50	1
62–1320	Knob – Chute Control	9	17	1
62–1330	Bolt – Shoulder	7	24	2
62–1350	Bushing – Output	5	27	2
62–1381	Handle – R.H.	9	9	1
62–1430	Retainer – Chute	1	11	3
62–1440	Cover – Engine Frame	1	32	1
62–1460	Gear – Universal	9	32	2
62–1470	Base – Lockout	8	42	1
62–1490	Plate – Guide	9	15	1
62–1520	Cover – Knob	9	19	1
62–1531	Shaft – Auger (28")	3	1	1
62–1640	Lever – Trip	9	12	1
62–1650	Spring – Torsion	8	6	1
62–1690	Cover – Detent	5	11	1
62–1700	Lever – Lockout	8	19	1
62–1710	Spring – Flat	8	16	1
62–1720	Rod – Chute Gear	1	23	1
62–1740	Bracket – Cable	5	7	1
62–5760	Decal – Primer	4	10	1
63–2030	Rod – Cross	9	27	1
63–2080	Cover – Belt (Upper)	1	28	1
63–2112	Axle Assembly	7	29	1
63–2150	Frame – Control	8	23	1
63–2160	Rod – Chute Crank	9	16	1
63–2170	Cover – Lever Lock	9	1	1
63–2180	Bracket – Gear	1	7	1
63–2190	Pin – Gearshift Link	5	15	1
63–2200	Cable – Latch	8	39	1
63–2210	Cable – Gearbox	8	38	1
63–2220	Spring – Extension	8	8	1
63–2230	Spring – Extension	8	21	1
63–2240	Spring – Extension	8	17	1
63–2250	Bushing – Axle	7	26	2
63–2270	Spring – Torsion	8	40	1
63–2280	Washer – Thrust	5	33	1
63–2300	Retainer – Cable	1	26	1
63–2310	Decal – Hot Surface	4	14	1
63–2410	Decal – Choke	4	12	1
63–2480	Decal – #2	8	10	1
63–2550	Decal – Panel Top	9	14	1
63–2600	Bellcrank	5	20	1
63–2610	Pin – Tang	8	9	1
63–2630	Bracket – Shift	8	33	1
63–2640	Joint – Ball	8	36	1
63–2640	Joint– Ball	4	17	1
63–2650	Screw – Shoulder	8	18	2
63–2670	Plate – Chute Retainer	1	10	3
63–2700	Cable – Impeller	9	41	1

*Not Illustrated

TORO PART NUMBER INDEX (Cont.)

Part No.	Description	Pg. No.	Ref. No.	Qty.
63-2710	Cable – Traction	9	40	1
63-2740	Spring – Torsion	7	36	1
63-2820	Arm – Brake	7	2	1
63-2830	Rod – Shift (Lower)	8	34	1
63-2850	Bracket – Idler Arm	7	3	1
63-2870	Spring – Extension	7	14	2
63-2881	Spring – Torsion	7	13	1
63-2890	Spring – Compression	5	9	1
63-2900	Washer – Plastic	1	17	2
63-2910	Spring – Torsion	9	7	1
63-2920	Spring – Extension	5	4	1
63-2930	Chain – Drive	4	19	1
63-2951	Belt – Traction	4	6	1
63-2962	Belt – Impeller	4	4	1
63-2990	Frame – Transmission	4	21	1
63-3020	Guard – Chute	1	14	1
63-3050	Decal – Lever	9	25	1
63-3130	Clip – Chute Guard	1	12	1
63-3190	Decal – Throttle	4	11	1
63-3290	Cover – Cable	1	29	1
63-3340	Washer	7	22	4
63-3380	Spacer – Traction Lever	9	22	1
63-3410	Bolt – Shoulder	5	13	1
63-3420	Harness – Wire	9	*	1
63-3450	Bearing – Impeller	2	39	1
63-3470	Decal – Warning	9	38	1
63-3470	Decal – Warning	7	40	1
63-8360	Key – Switch	9	20	1
66-6980	Frame – Engine	1	31	1
66-7720	Rod – Latch	7	18	1
66-7730	Clevis	8	30	1
66-7740	Pivot Arm Assembly	7	23	2
66-7761	Blade – Scraper	2	45	1
66-7811	Shaft – Impeller	3	6	1
66-7821	Plate – Side R.H.	1	3	1
66-7831	Plate – Side L.H.	2	46	1
66-7850	Handlegrip	9	10	2
66-7920	Impeller	2	50	1
66-8010	Spacer	2	51	2
66-8030	Transmission Assembly	4	20	1
66-8060	Pad – Brake	7	42	1
66-8091	Handle – L.H.	9	29	1
66-8100	Panel – Control	9	13	1
67-5870	Gear – Bevel 36T	6	57	1
67-5880	Collar – Shift	6	58	1
67-9240	Rod – Shift (Upper)	8	2	1
67-9250	Retainer – Shift Rod	8	28	1
68-4100	Plate – Engine Stud R.H.	2	*	1
68-4110	Plate – Engine Stud L.H.	2	34	1
68-4310	Gear – 26T	6	47	1
68-4320	Sleeve – Shift	6	55	1
68-7110	Mount – Lamp	10	6	1
68-7140	Bolt – U	10	10	1
68-7451	Auger – R.H.	2	54	1
68-7461	Auger – L.H.	2	*	1
68-7510	Guide – Belt	4	8	1
68-8410	Cover – Belt (Lower)	2	41	1
74-1440	Skid Assembly	2	44	2
74-1561	Auger Gearbox Assembly	2	53	1
74-1570	Gearcase Assembly – L.H.	3	13	1
74-1580	Gearcase Assembly – R.H.	3	4	1
88-0590	Decal – Panel Front	9	36	1
88-0810	Spring – Extension	9	39	1
218-16	Bulb – Sealed Beam	10	19	1
218-473	Boot – Switch	10	1	1
218-552	Bucket – Headlamp	10	3	1
218-553	Switch Assembly	10	2	1
218-554	Bracket	10	4	1
218-556	Bracket – U	10	16	1
2210-250	Screw	9	2	3
2210-268	Shaft – Alternator 3"	10	20	1
2210-270	Tube – Centering	10	*	1
2210-272	Connector – Light	10	22	1
2210-273	Screw – Self Tapping	10	23	3
2210-274	Alternator	10	21	1
2210-288	Shaft – Alternator 4"	10	*	1
231-123	Tire	7	34	2
232-48	Tube – Inner	7	33	2
241-127	Rim – Wheel	7	32	2
252-59	Washer – Thrust	5	2	3
252-71	Bearing – Thrust	3	5	2
252-76	Bearing – Thrust	3	9	1
252-78	Washer – Thrust	3	8	2
252-80	Washer – Thrust	7	27	4
252-80	Washer – Thrust	2	36	1
253-149	Seal – Input	3	11	1
256-237	Bushing – Sleeve	3	3	2
256-296	Bushing – Nyliner	8	31	2
257-9	Washer – Thrust	8	14	1
257-10	Washer – Thrust	5	39	4
281-1	Plug – Pipe Sq. Hd.	3	14	1
283-3	Pin – Clevis	5	19	1
321-3	Screw – Hex Hd.	2	60	8
321-9	Screw – Cap Hex. Hd.	8	29	1
321-15	Screw – Hex Hd.	6	54	1
321-44	Screw – Hex. Hd.	2	52	2
322-13	Screw – Hex. Flange Hd.	10	15	1
323-6	Screw – Hex Hd.	1	1	2
323-7	Screw – Hex Hd.	7	8	2
3210-1	Screw – Hex Hd.	4	25	2
3212-8	Screw – Hex. Hd.	4	1	1
3217-7	Nut – Hex.	10	8	1
3220-3	Nut – Jam	4	26	2
3220-3	Nut – Jam	8	35	2
3230-2	Bolt – Carriage	1	8	1
3230-23	Screw – Carriage	2	48	10
3231-2	Bolt – Carriage	10	17	1
3234-5	Screw – Hex. Washer Hd.	2	33	10
3234-7	Screw – Hex Flange Hd.	4	16	4
3234-7	Screw – Hex Flange Hd.	9	26	6
3234-7	Screw – Hex Flange Hd.	7	41	2
3234-13	Screw – Hex. Hd.	7	5	1
3234-28	Screw – Hex Flange Hd.	1	4	12
3242-4	Screw – Set Sq. Hd.	1	25	2
3253-4	Washer – Lock	4	24	2
3253-6	Washer – Lock	4	2	1
3253-21	Washer – Lock	10	7	1
3255-8	Washer – Lock	10	5	2
3256-1	Washer – Flat	7	21	2
3256-1	Washer – Flat	8	27	2
3256-14	Washer – Flat	1	16	3
3256-14	Washer – Flat	9	43	2
3256-23	Washer – Flat	10	11	2
3256-23	Washer – Flat	8	24	3
3256-23	Washer – Flat	2	42	1
3256-61	Washer – Flat	1	21	1
3257-10	Key – Woodruff	3	12	1
3257-23	Key – Woodruff	2	35	1
3269-23	Rivet	1	30	4
3272-1	Pin – Cotter	5	17	1

*Not Illustrated

TORO PART NUMBER INDEX (Cont.)

Part No.	Description	Pg. No.	Ref. No.	Qty.
3274–13	Screw – Machine	1	13	3
3290–243	Pin – Klik	7	38	2
3290–320	Nut – Push	8	15	1
3290–320	Nut – Push	9	18	2
3290–326	Nut – Push	1	15	2
3290–359	Screw	9	28	1
3290–378	Tie – Cable	9	30	4
3290–378	Tie Wrap	10	9	2
3290–422	Nut – Push	8	4	1
3290–456	Washer – Belleville	8	37	1
3290–461	Washer – Belleville	7	16	2
3290–461	Washer – Belleville	4	22	4
3290–476	Fastener – Panel	7	37	1
3290–477	Washer – Curved	5	14	1
3296–2	Nut – Lock	1	9	4
3296–2	Nut – Lock	9	23	1
3296–23	Nut – Lock	7	25	2
3296–29	Nut – Lock	10	12	2
3296–29	Nut – Lock	8	25	7
3296–29	Nut – Lock	2	37	12
3296–39	Nut – Lock	7	15	2
3296–39	Nut – Lock	4	18	1
3296–39	Nut – Lock	8	32	1
3296–42	Nut	9	42	4
3296–42	Nut – Lock	7	4	1
3296–42	Nut – Lock	5	23	1
3296–42	Nut – Lock	8	26	1
3296–42	Nut – Lock	2	49	10
3296–47	Nut – Lock	9	37	4
3296–47	Nut – Lock	7	39	2
3296–47	Nut – Lock	2	47	12
3296–59	Nut – Lock	7	7	2
32104–71	Screw – Pan Hd.	5	12	1
32104–76	Screw – Self Tapping	9	34	2
32104–95	Screw – Hex Washer Hd.	5	21	2
32104–118	Screw – Pan Hd.	8	11	2
32104–118	Screw – Pan Hd.	9	35	2
32104–121	Screw – Hex Flange Hd.	7	31	3
32120–46	Ring – Retaining	7	1	2
32120–46	Ring – Retaining	8	13	1
32121–9	Pin – Roll	7	19	2
32121–50	Pin – Roll	9	31	2
32121–106	Pin – Coil	5	6	3
32122–32	Screw	1	18	1
32128–20	Nut – Lock	4	15	4
32128–32	Nut – Flange Lock	6	51	1
32128–35	Nut – Flange Lock	10	18	1
32144–4	Screw	4	13	1
32144–4	Screw – Hex Flange Hd.	1	27	6
32144–4	Screw – Hex Flange Hd.	7	20	2
32144–4	Screw – Self Tapping	5	8	2
32144–86	Screw – Hex Washer Hd.	5	25	6
32144–110	Screw – Hex Washer Hd.	3	17	9
32151–33	Ring – Snap	3	7	1
32151–66	Ring – Retaining	9	5	1
505–101	Grease – 14.5 oz. Cartridge	6	*	1
505–129	Sealant – 100g Tube	3	*	1

Accessories

Description	Model / Parts No.
Tire Chains Kit	63–3040
Weight Kit	74–1190
Drift Breaker	66–7970
Snow Cab	68–9500
Differential Kit	38038
110V Starter Kit	37–4810

*Not Illustrated

MAINTENANCE RECORD

Date								