FORM NO. 3316–346

TORO®

MODEL NO. 38580–4900001 & UP
MODEL NO. 38566–4900001 & UP

PARTS CATALOG

1132 SNOWTHROWER

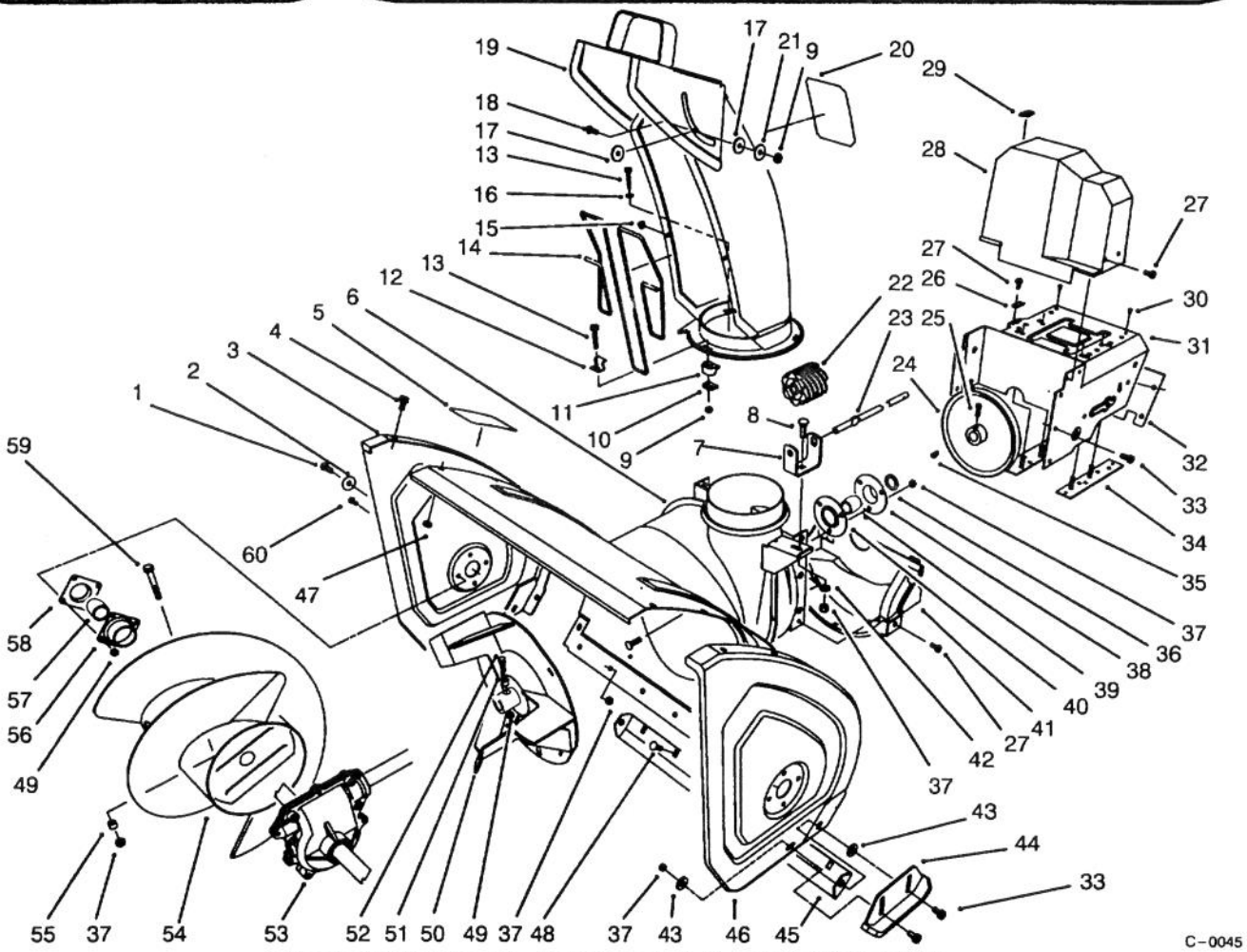

HOUSING & CHUTE ASSEMBLY

Ref. No.	Part No.	Description	No. Used
1	323–6	Screw – Hex Hd.	2
2	3–0750	Washer – Retaining	2
3	66–7821	Plate – Side R.H.	1
4	3234–28	Screw – Hex Flange Hd.	12
5	53–7670	Decal – Danger Auger	1
6	62–0722	Housing – 32"	1
7	63–2180	Bracket – Gear	1
8	3230–2	Bolt – Carriage	1
9	3296–2	Nut – Lock	4
10	63–2670	Plate – Chute Retainer	3
11	62–1430	Retainer – Chute	3
12	63–3130	Clip – Chute Guard	1
13	3274–13	Screw – Machine	3
14	63–3020	Guard – Chute	1
15	3290–326	Nut – Push	2
16	3256–14	Washer – Flat	1

Ref. No.	Part No.	Description	No. Used
17	63–2900	Washer – Plastic	2
18	32122–32	Screw	1
19	62–0840	Chute Assembly	1
20	63–3740	Decal – Danger Chute (Model 38580 Only)	1
*	53–7660	Decal – Danger Chute (Model 38566 Only)	1
21	3256–61	Washer – Flat	1
22	62–0820	Gear – Worm	1
23	62–1720	Rod – Chute Gear	1
24	62–1300	Pulley – Impeller	1
25	3242–4	Screw – Set Sq. Hd.	2
26	63–2300	Retainer – Cable	1
27	32144–4	Screw – Hex Flange Hd.	6
28	63–2080	Cover – Belt (Upper)	1
29	63–3290	Cover – Cable	1

© The TORO Company –1993
All Rights Reserved

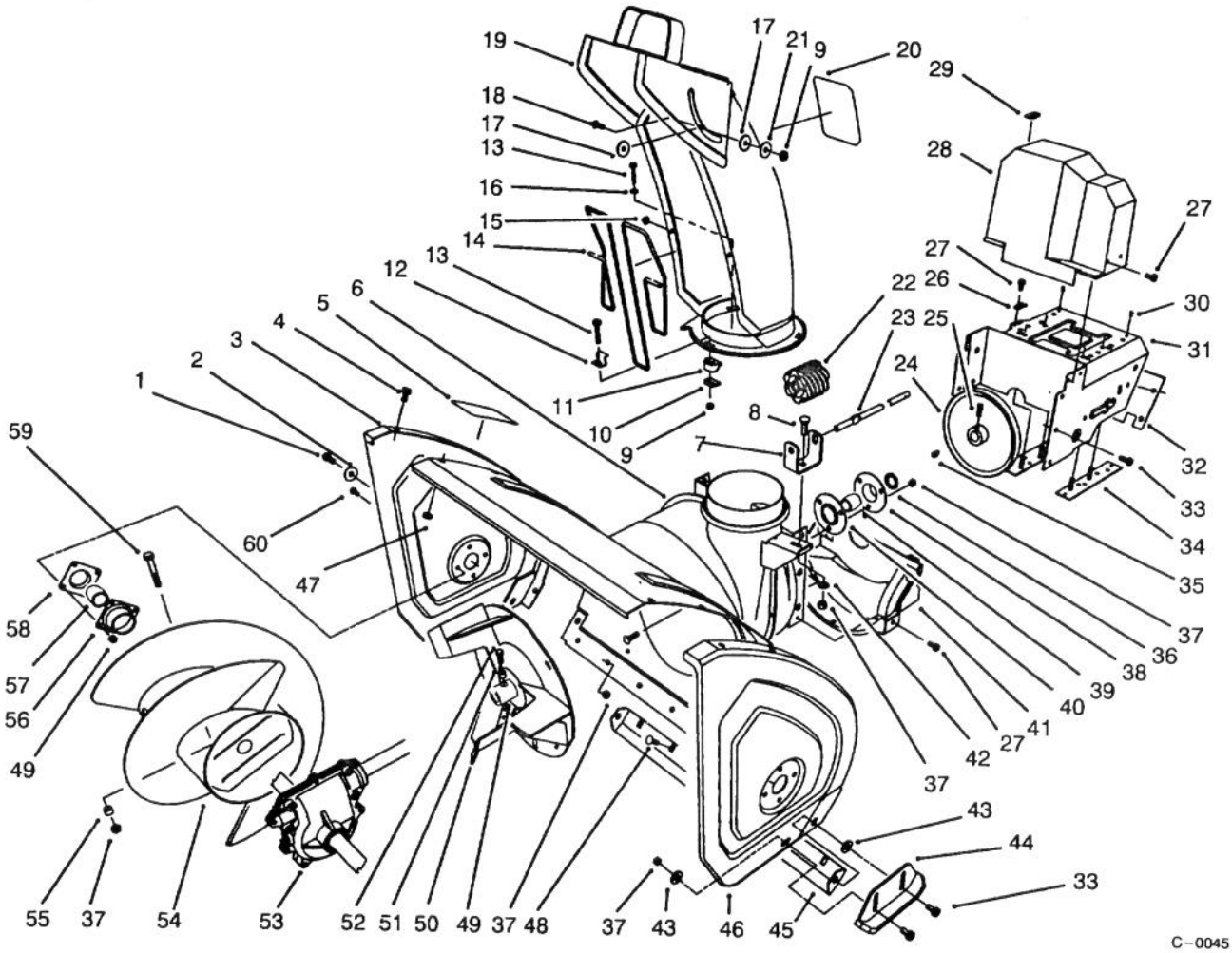

HOUSING ASSEMBLY (Continued)

Ref. No.	Part No.	Description	No. Used
30	3269–23	Rivet	4
31	66–6980	Frame – Engine	1
32	62–1440	Cover – Engine Frame	1
33	3234–5	Screw – Hex. Washer Hd.	10
34	68–4150	Plate – L.H.	1
*	68–4140	Plate – R.H.	1
35	3257–23	Key – Woodruff	1
36	252–80	Washer – Thrust	1
37	3296–29	Nut – Lock	16
38		Flange – Bearing (Rear)	1
39	63–3450	Bearing – Impeller	1
40		Flange – Bearing (Front)	1
41	68–8410	Cover – Belt (Lower)	1
42	3256–23	Washer – Flat	1
43	52–2861	Washer	4
44	74–1440	Skid Assembly	2
45	66–7760	Blade – Scraper	1
46	66–7831	Plate – Side L.H.	1
47	3296–47	Nut – Lock	12
48	3230–23	Screw – Carriage	11
49	3296–42	Nut – Lock	10

Ref. No.	Part No.	Description	No. Used
50	66–7920	Impeller	1
51	66–8010	Spacer	2
52	321–44	Screw – Hex. Hd.	2
53	74–1562	Auger Gearbox Assembly	1
54	63–2752	Auger – R.H. (Model 38580 Only)	1
*	63–2762	Auger – L.H. (Model 38580 Only)	1
*	68–7452	Auger – R.H. (Model 38566 Only)	1
*	68–7462	Auger – L.H. (Model 38566 Only)	1
55	25–5090	Spacer – Auger Hub	2
56	20–0990	Flange – Bearing (Inner)	2
57	20–0980	Bearing – Auger	2
58	20–1000	Flange – Bearing (Outer)	2
59	17–7030	Bolt – Auger	2
60	321–3	Screw – Hex Hd.	8
*	12–8789	Impeller Bearing Assembly (Incl. Ref. #38–40)	1

*Not Illustrated

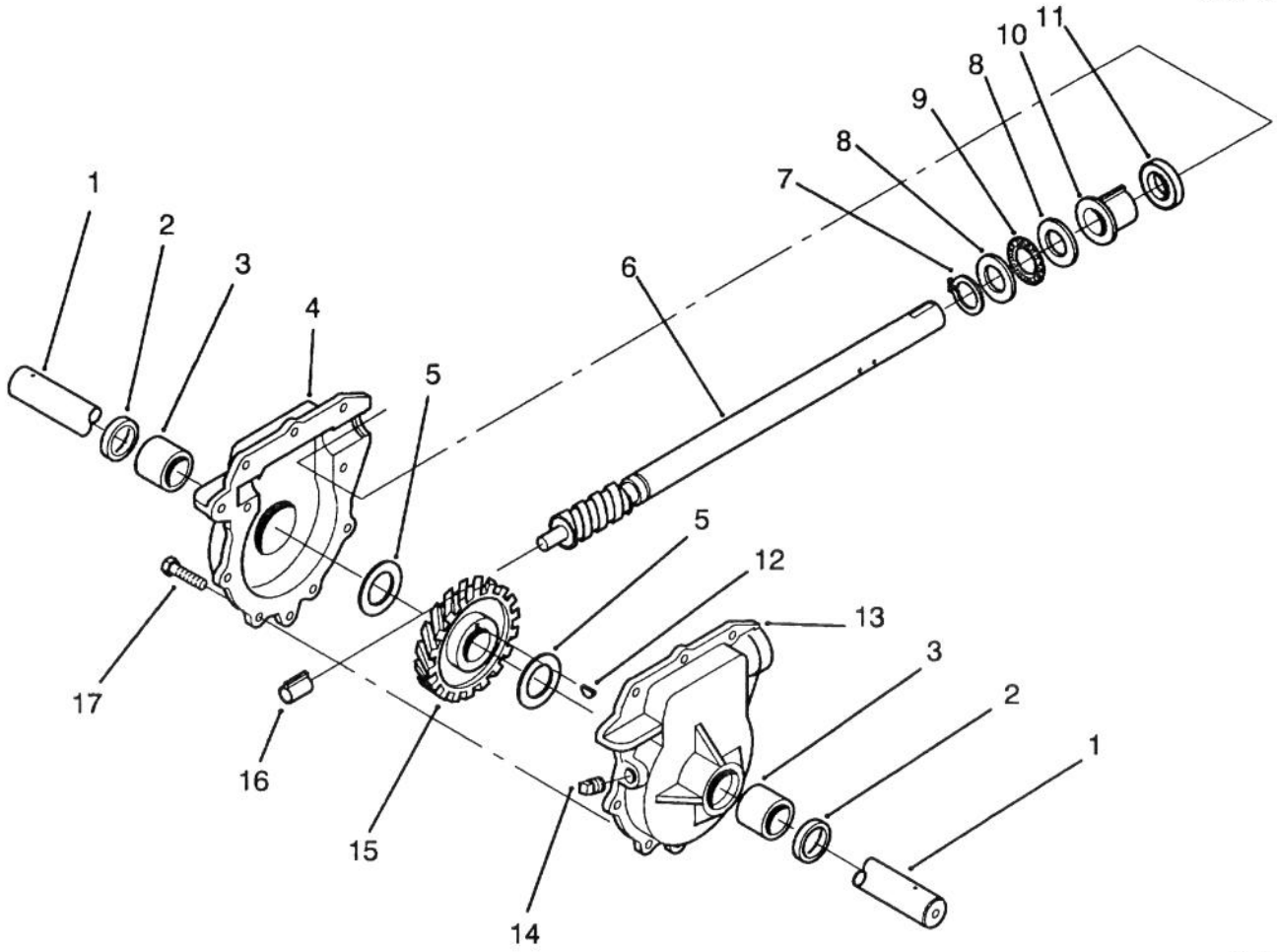

C–1015

32" AUGER GEARCASE ASSEMBLY NO. 74–1562

Ref. No.	Part No.	Description	No. Used
1	62–1532	Shaft – Auger (32")	1
2	7–0045	Seal – Oil	2
3	256–237	Bushing – Sleeve	2
4	74–1580	Gearcase Assembly – R.H. (Incl. Ref. # 2–3)	1
5	252–71	Bearing – Thrust	2
6	66–7811	Shaft – Impeller	1
7	32151–33	Ring – Snap	1
8	252–78	Washer – Thrust	2
9	252–76	Bearing – Thrust	1

Ref. No.	Part No.	Description	No. Used
10	37–6560	Bushing – Input	1
11	253–149	Seal – Input	1
12	3257–10	Key – Woodruff	1
13	74–1570	Gearcase Assembly – L.H. (Incl. Ref. # 2–3)	1
14	281–1	Plug – Pipe Sq. Hd.	1
15	62–0120	Gear – Helical	1
16	62–1150	Bushing – Worm	1
17	32144–110	Screw – Hex Washer Hd.	9
*	505–129	Sealant – 100g Tube	1

*Not Illustrated

3316–346

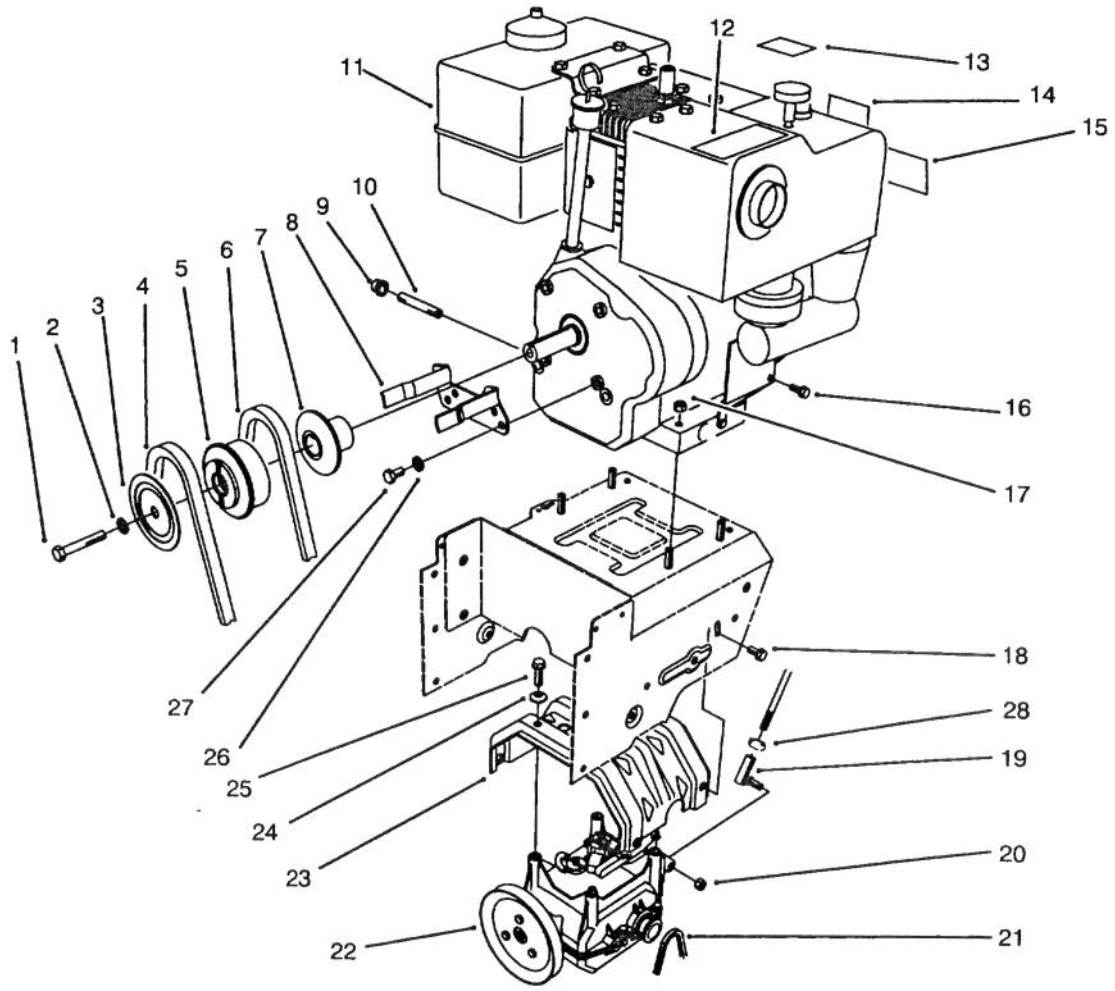

ENGINE ASSEMBLY

Ref. No.	Part No.	Description	No. Used
1	3212–8	Screw – Hex. Hd.	1
2	3253–6	Washer – Lock	1
3	62–0940	Sheave Half – Impeller	1
4	63–2964	Belt – Impeller	1
5	62–0930	Hub – Sheave	1
6	63–2953	Belt – Traction	1
7	62–0920	Sheave Half – Traction	1
8	68–7510	Guide – Belt	1
9	288–10	Cap – Pipe	1
10	289–45	Pipe – Oil Drain	1
†11		Engine – Briggs & Stratton (Model No. 252416 Type No. 0756–01) Model No. 38580	1
†*		Engine – Briggs & Stratton (Model No. 252416 Type No. 0757–01) (Model No. 38566)	1
12	66–6840	Decal – Hot Surface (Model No. 38580)	1
*	63–2310	Decal – Hot Surface (Model No. 38566)	1

Ref. No.	Part No.	Description	No. Used
13	63–2340	Decal – Throttle	1
14	63–2320	Decal – Primer	1
15	63–2360	Decal – Choke (Model No. 38580)	1
*	63–2460	Decal – Choke (Model No. 38566)	1
16	2210–250	Screw – Hex. Washer Hd.	1
17	32128–20	Nut – Lock	4
18	3234–7	Screw – Hex Flange Hd.	4
19	63–2640	Joint– Ball	1
20	3296–39	Nut – Lock	1
21	63–2930	Chain – Drive	1
22	66–8030	Transmission Assembly	1
23	63–2990	Frame – Transmission	1
24	3290–461	Washer – Belleville	4
25	11–0590	Screw – Hex Hd.	4
26	3253–4	Washer – Lock	2
27	3210–1	Screw – Hex Hd	2
28	3220–3	Nut – Jam	1
*	12–8949	Loose Parts	1

†Obtain from your local Briggs & Stratton Dealer.

*Not Illustrated

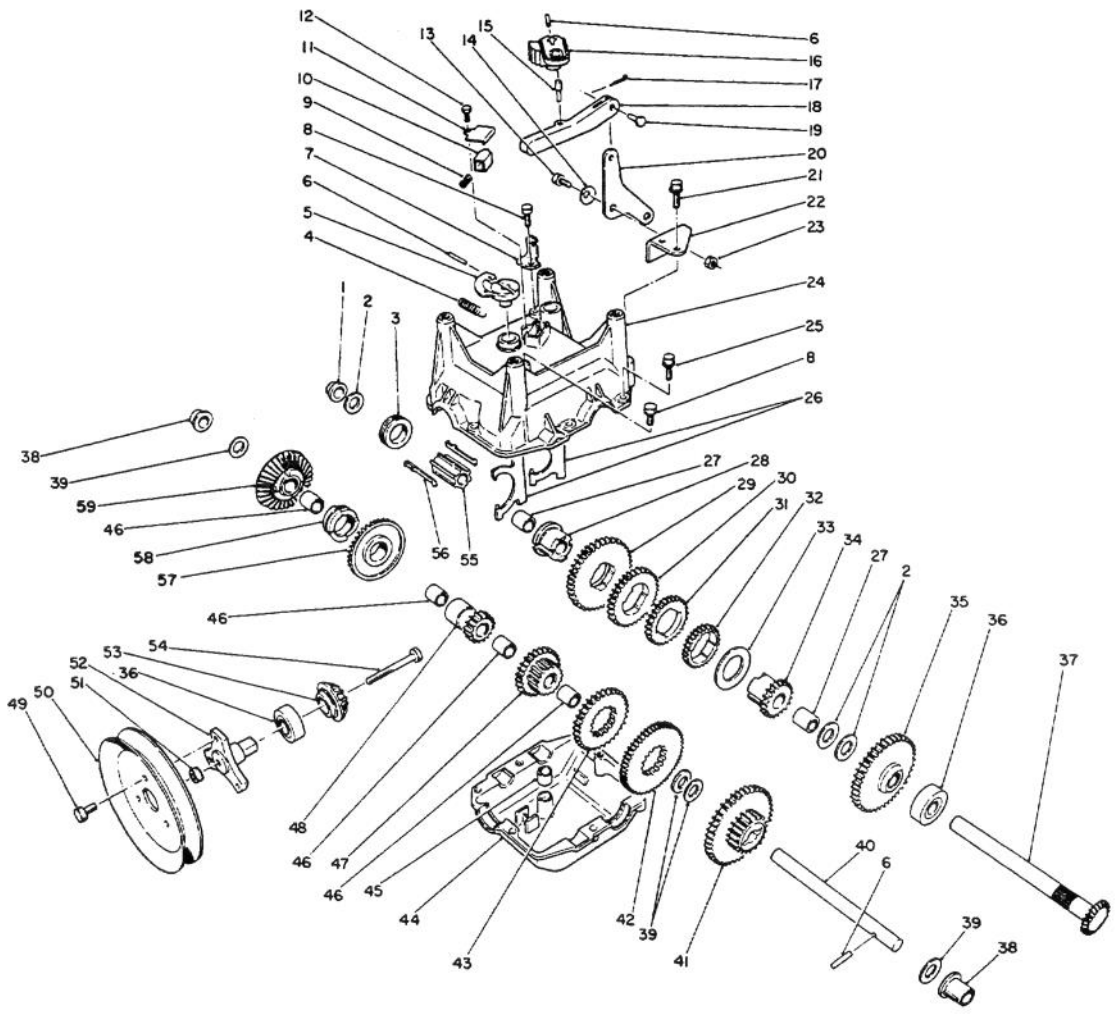

TRANSMISSION ASSEMBLY NO. 66–8030

Ref. No.	Part No.	Description	No. Used
1	62–1180	Bushing – Output (Flange)	1
2	252–59	Washer – Thrust	3
3	62–0430	Collar – Shift (Speed)	1
4	63–2920	Spring – Extension (F/R Return)	1
5	62–0880	Lever – Direction Shift	1
6	32121–106	Pin – Coil	3
7	62–1740	Bracket – Cable	1
8	32144–4	Screw – Self Tapping	2
9	63–2890	Spring – Compression (Detent)	1
10	62–1020	Button – Detent	1
11	62–1690	Cover – Detent	1
12	32104–71	Screw – Pan Hd.	1
13	63–3410	Bolt – Shoulder	1
14	3290–477	Washer – Curved	1
15	63–2190	Pin – Gearshift Link	1
16	62–0870	Lever – Gear Shift	1
17	3272–1	Pin – Cotter	1
18	62–0860	Link – Gearshift	1
19	283–3	Pin – Clevis	1
20	63–2600	Bellcrank	1
21	32104–95	Screw – Hex Washer Hd.	2

Ref. No.	Part No.	Description	No. Used
22	62–1190	Bracket – Bellcrank	1
23	3296–42	Nut – Lock	1
24	62–0490	Gear Case – Upper	1
25	32144–86	Screw – Hex Washer Hd.	6
26	62–1040	Yoke–Shift	2
27	62–1350	Bushing – Output	2
28	62–0320	Sleeve	1
29	62–0240	Gear – 45T	1
30	62–0220	Gear – 34T	1
31	62–0200	Gear – 27T	1
32	62–0250	Gear – 29T	1
33	63–2280	Washer – Thrust	1
34	62–0340	Sleeve – Gear 19T	1
35	62–0370	Gear – 41T	1
36	38–7820	Bearing – Ball	2
37	62–1080	Shaft – Output	1
38	62–1170	Bushing – Flange	2
39	257–10	Washer – Thrust	4
40	62–0330	Shaft – Intermediate	1
41	62–0360	Gear – Compound 19T/41T	1
42	62–0260	Gear – 51T	1
43	62–0210	Gear – 33T	1
44	62–0480	Gear Case – Lower	1

3316-346

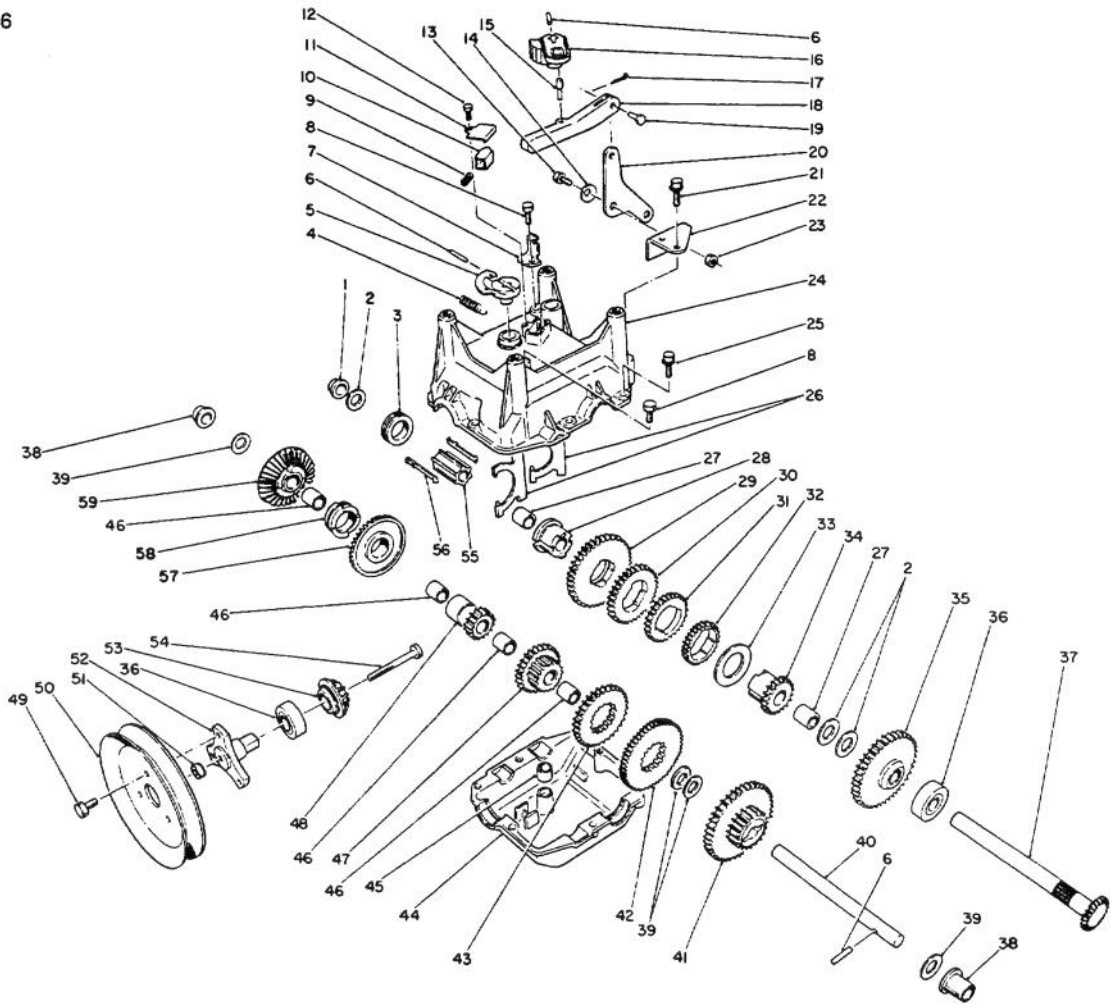

C-0052

TRANSMISSION ASSEMBLY NO. 66-8030 (Continued)

Ref. No.	Part No.	Description	No. Used
45	29-9570	Bushing - Yoke	1
46	62-1160	Bushing - Intermediate	4
47	68-4310	Gear - 26T	1
48	62-0500	Gear - 15T	1
49	12-3270	Screw	3
50	62-1310	Pulley - Traction	1
51	32128-32	Nut - Flange Lock	1
52	62-0380	Hub - Pulley	1
53	62-0350	Pinion - Bevel 19T	1

Ref. No.	Part No.	Description	No. Used
54	321-15	Screw - Cap Hex Hd.	1
55	68-4320	Sleeve - Shift	1
56	62-0310	Key - Shift	2
57	67-5870	Gear - Bevel 36T	1
58	67-5880	Collar - Shift	1
59	13-3559	Gear - Bevel Reverse 36T (Incl. Ref. #46)	1
*	505-101	Grease - 14.5 oz. Cartridge	1

*Not Illustrated

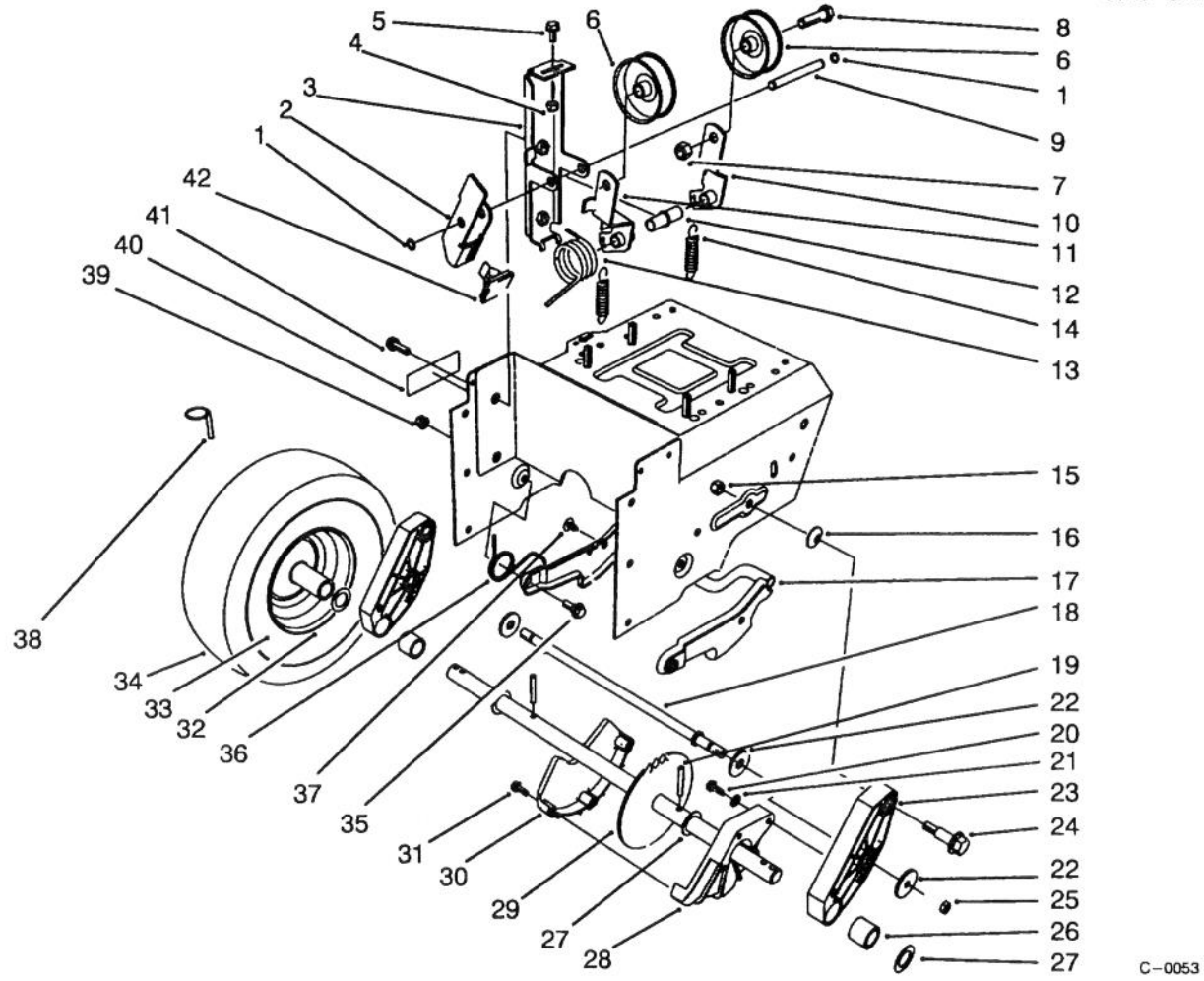

TRACTION DRIVE ASSEMBLY

Ref. No.	Part No.	Description	No. Used
1	32120–46	Ring – Retaining	2
2	63–2820	Arm – Brake	1
3	63–2850	Bracket – Idler Arm	1
4	3296–42	Nut – Lock	1
5	3234–13	Screw – Hex. Hd.	1
6	3–4244	Pulley – Idler	2
7	3296–59	Nut – Lock	2
8	323–7	Screw – Hex Hd.	2
9	62–0970	Pin – Idler	1
10	62–1260	Arm – Traction Idler	1
11	62–1280	Arm – Impeller Idler	1
12	62–1210	Bushing – Idler	1
13	63–2881	Spring – Torsion	1
14	63–2870	Spring – Extension	2
15	3296–39	Nut – Lock	2
16	3290–461	Washer – Belleville	2
17	62–0470	Latch – Arm	1
18	66–7720	Rod – Latch	1
19	32121–9	Pin – Roll	2
20	32144–4	Screw – Hex Flange Hd.	2
21	3256–1	Washer – Flat	2
22	63–3340	Washer	4
23	66–7740	Pivot Arm Assembly (Incl. Ref. # 26)	2
24	62–1330	Bolt – Shoulder	2
25	3296–23	Nut – Lock	2
26	63–2250	Bushing – Axle	2
27	252–80	Washer – Thrust	4
28	62–1010	Guard – Chain L.H.	1
29	63–2112	Axle Assembly	1
30	62–1000	Guard – Chain R.H.	1
31	32104–121	Screw – Hex Flange Hd.	3
32	241–127	Rim – Wheel	2
33	232–48	Tube – Inner	2
34	231–123	Tire	2
35	5–2490	Bolt – Shoulder	2
36	63–2740	Spring – Torsion	1
37	3290–476	Fastener – Panel	1
38	3290–243	Pin – Klik	2
39	3296–47	Nut – Lock	2
40	66–6860	Decal – Warning (Model No.38580)	1
*	63–3470	Decal – Warning (Model No.38566)	1
41	3234–7	Screw – Hex Flange Hd.	2
42	66–8060	Pad – Brake	1

*Not Illustrated

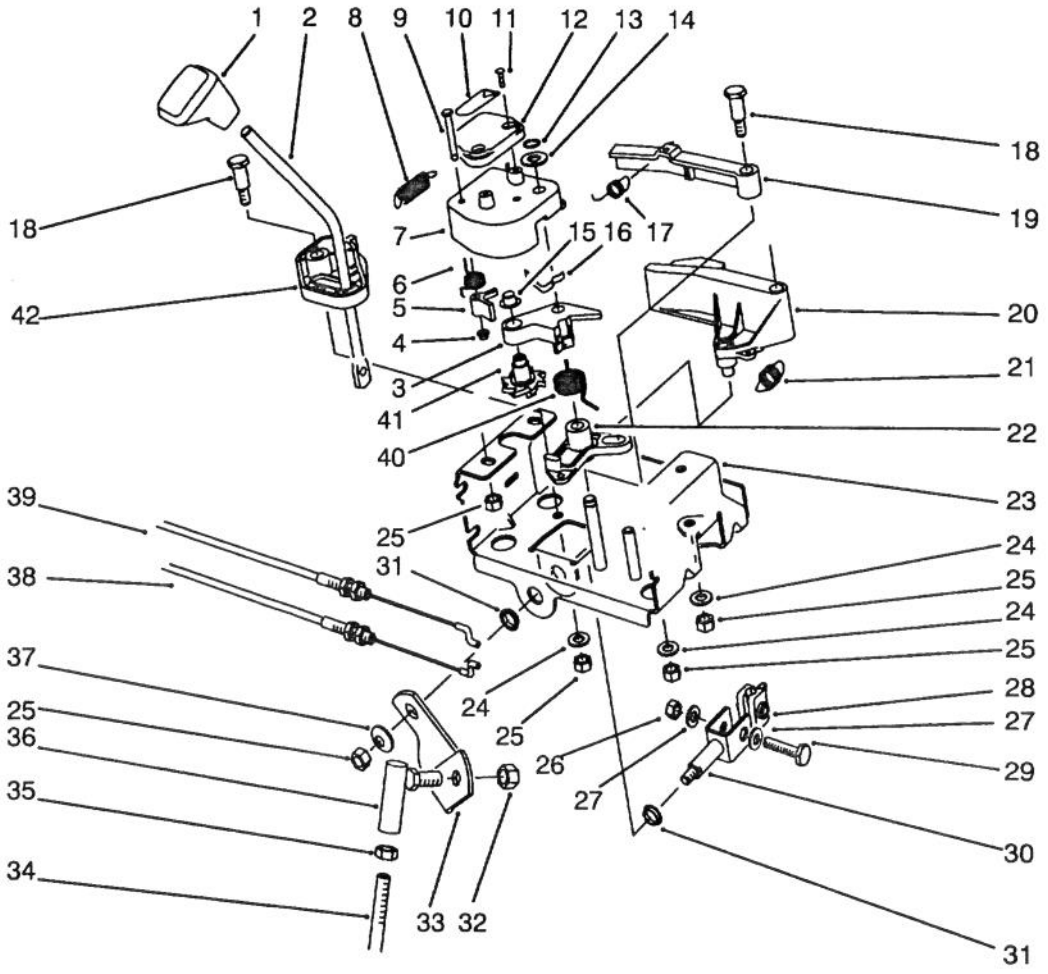

TRACTION LINKAGE ASSEMBLY

Ref. No.	Part No.	Description	No. Used
1	62–1290	Knob – Shift	1
2	67–9240	Rod – Shift (Upper)	1
3	62–1110	Lever – Index Wheel	1
4	3290–422	Nut – Push	1
5	62–0180	Tang – Index	1
6	62–1650	Spring – Torsion	1
7	62–1100	Lever – Latch	1
8	63–2220	Spring – Extension	1
9	63–2610	Pin – Tang	1
10	63–2480	Decal – #2	1
11	32104–118	Screw – Pan Hd.	2
12	62–1140	Cover – Latch	1
13	32120–46	Ring – Retaining	1
14	257–9	Washer – Thrust	1
15	3290–320	Nut – Push	1
16	62–1710	Spring – Flat	1
17	63–2240	Spring – Extension	1
18	63–2650	Screw – Shoulder	2
19	62–1700	Lever – Lockout	1
20	62–1130	Lever – Reverse	1
21	63–2230	Spring – Extension	1

Ref. No.	Part No.	Description	No. Used
22	62–1120	Lever – Reverse	1
23	63–2150	Frame – Control	1
24	3256–23	Washer – Flat	3
25	3296–29	Nut – Lock	7
26	3296–42	Nut – Lock	1
27	3256–1	Washer – Flat	2
28	67–9250	Retainer – Shift Rod	1
29	321–9	Screw – Cap Hex. Hd.	1
30	66–7730	Clevis	1
31	256–296	Bushing – Nyliner	2
32	3296–39	Nut – Lock	1
33	63–2630	Bracket – Shift	1
34	63–2830	Rod – Shift (Lower)	1
35	3220–3	Nut – Jam	1
36	63–2640	Joint – Ball	1
37	3290–456	Washer – Belleville	1
38	63–2210	Cable – Gearbox	1
39	63–2200	Cable – Latch	1
40	63–2270	Spring – Torsion	1
41	62–0170	Wheel – Index	1
42	62–1470	Base – Lockout	1

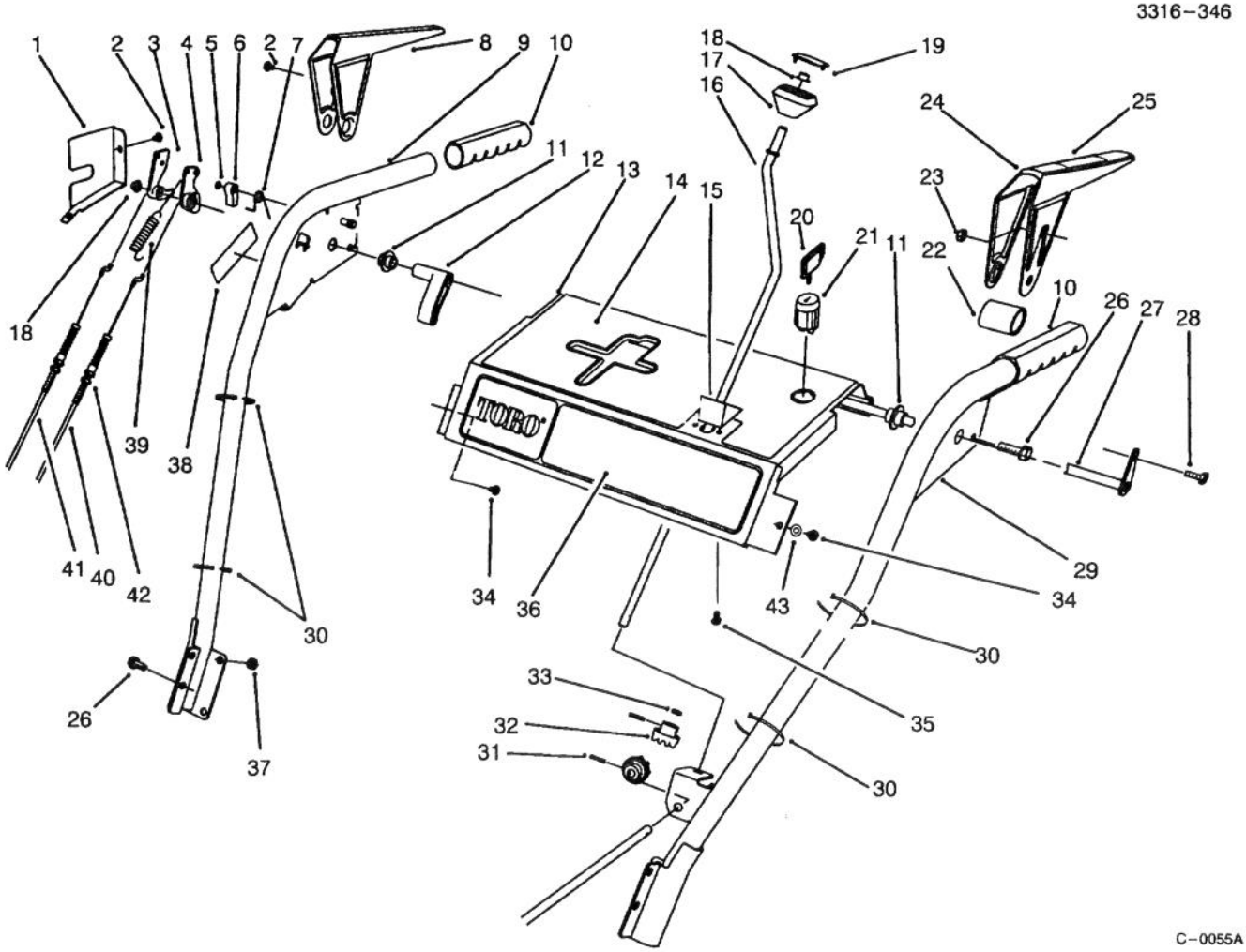

HANDLE ASSEMBLY

Ref. No.	Part No.	Description	No. Used
1	63-2170	Cover - Lever Lock	1
2	2210-250	Screw	4
3	62-0300	Tang - Locking	1
4	62-0290	Cam - Release	1
5	32151-66	Ring - Retaining	1
6	62-0280	Latch - Lock	1
7	63-2910	Spring - Torsion	1
8	62-1050	Lever - Impeller	1
9	62-1381	Handle - R.H.	1
10	66-7850	Handlegrip	2
11	62-1070	Bushing - Lever	2
12	62-1640	Lever - Trip	1
13	66-8100	Panel - Control	1
14	66-6850	Decal - Panel Top (Model 38580 Only)	1
*	63-2550	Decal - Panel Top (Model 38566 Only)	1
15	62-1490	Plate - Guide	1
16	63-2160	Rod - Chute Crank	1
17	62-1320	Knob - Chute Control	1
18	3290-320	Nut - Push	2
19	62-1520	Cover - Knob	1
20	63-8360	Key - Switch	1
21	40-5940	Switch - On/Off	1
22	63-3380	Spacer - Traction Lever	1
23	3296-2	Nut - Lock	1
24	62-1060	Lever - Traction	1

Ref. No.	Part No.	Description	No. Used
25	63-3050	Decal - Lever Model 38580 only	1
26	3234-7	Screw - Hex Flange Hd.	6
27	63-2030	Rod - Cross	1
28	3290-359	Screw	1
29	66-8091	Handle - L.H.	1
30	3290-378	Tie - Cable	4
31	32121-50	Pin - Roll	2
32	62-1460	Gear - Universal	2
33	62-1230	Washer - Rubber	1
34	32104-76	Screw - Self Tapping	2
35	32104-118	Screw - Pan Hd.	2
36	63-2530	Decal - Panel Front	1
37	3296-47	Nut - Lock	4
38	66-6860	Decal - Warning (Model 38580 Only)	1
*	63-3470	Decal - Warning (Model 38566 Only)	1
39	88-0810	Spring - Extension	1
40	63-2710	Cable - Traction	1
41	63-2700	Cable - Impeller	1
42	3296-42	Nut	4
43	3256-14	Washer - Flat	2
*	54-9810	Assembly - Wire	1
*	66-6900	Assembly - Wire, Adapter (Model 38566 only)	1
*	63-3420	Harness - Wire	1

*Not Illustrated

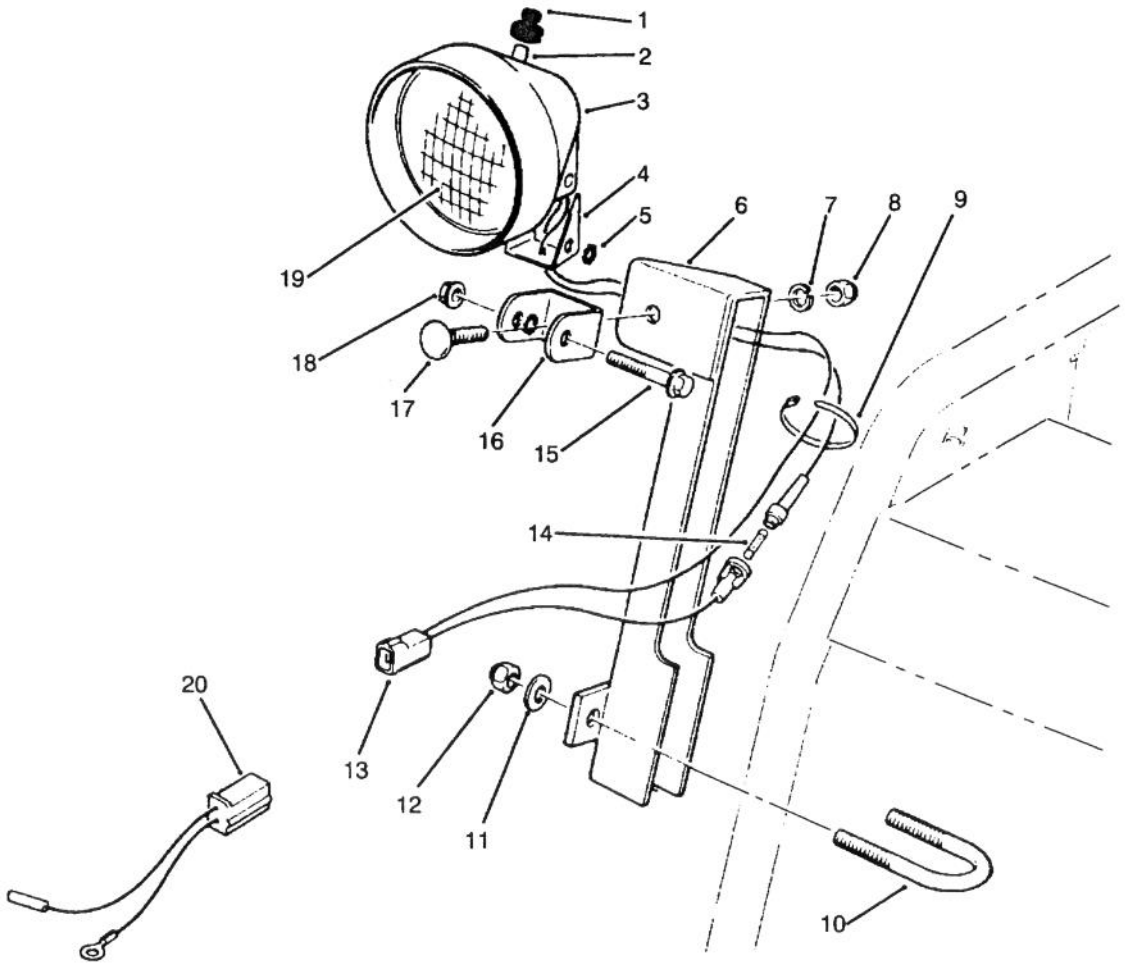

LIGHT ASSEMBLY NO. 66–7940

Ref. No.	Part No.	Description	No. Used
1	218–473	Boot – Switch	1
2	218–553	Switch Assembly	1
3	218–552	Bucket – Headlamp	1
4	218–554	Bracket	1
5	3255–8	Washer – Lock	2
6	68–7110	Mount – Lamp	1
7	3253–21	Washer – Lock	1
8	3217–7	Nut – Hex.	1
9	3290–378	Tie Wrap	2
10	68–7140	Bolt – U	1
11	3256–23	Washer – Flat	2
12	3296–29	Nut – Lock	2

Ref. No.	Part No.	Description	No. Used
13		Wire Assembly	1
†14		Fuse – 7–1/2 Amp.	1
15	322–13	Screw – Hex. Flange Hd.	1
16	218–556	Bracket – U	1
17	3231–2	Bolt – Carriage	1
18	32128–35	Nut – Flange Lock	1
19	218–15	Bulb – Sealed Beam	1
20	54–9810	Wire Assembly	1
*	66–6900	Wire Assembly – Adaptor (Model No.38566 Only)	1
*	54–9870	Headlamp Assembly (Incl. Ref. #1–5, 7–8 & 13–19)	1

*Not Illustrated
†Obtain Locally

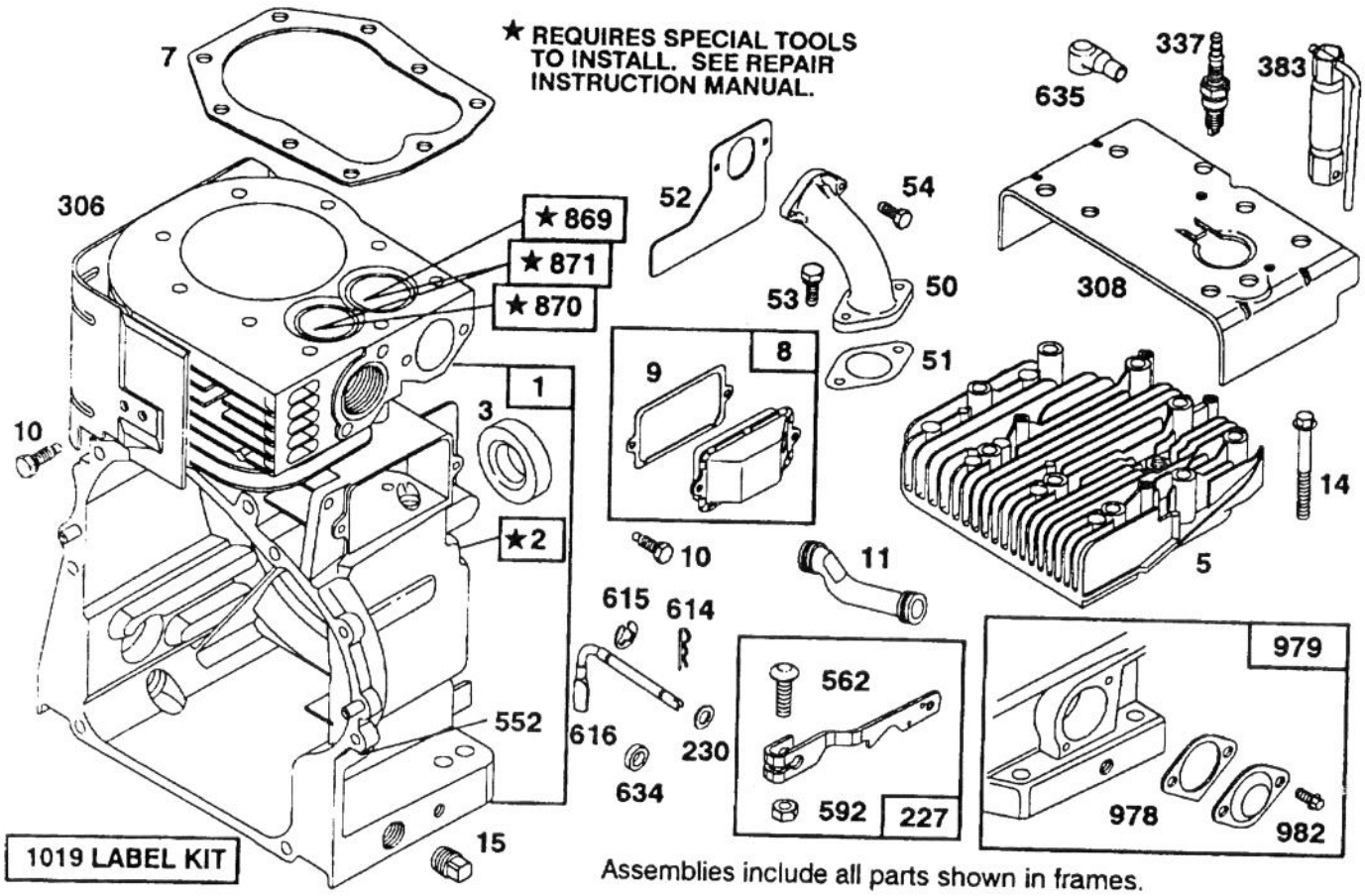

C–1728

ENGINE BRIGGS & STRATTON MODELS 252416–0756–01 & 252416–0757–01

Ref. No.	Part No.	Description	No. Used
1	396209	Cylinder Assembly	
2	399265	Bearing – Cylinder (DU)	
★3	391086	Seal – Oil	
5	212917	Head – Cylinder	
★7	271866	Gasket – Cylinder Hd.	
8	495736	Breather Assembly	
★▪9	27803	Gasket – Valve Cover	
10	94621	Screw – Breather	
11	280112	Tube – Breather	
14	93723	Screw – Cylinder Head (3" Long) **Note:** 94565 Screw – Cylinder Hd. (2–21/32" Long)	
15	94239	Plug – Pipe	
50	490051	Elbow – Intake	
★▪51	270267	Gasket – Carb. Mtg.	
★▪52	270872	Gasket – Intake Elbow Mtg.	
53	93415	Screw – Carburetor Mtg.	
54	93208	Screw – Intake Elbow Mtg.	
227	396775	Lever Assy. – Governor	
230	94742	Washer – Gov. Crank	

Ref. No.	Part No.	Description	No. Used
306	224542	Shield – Cylinder	
308	222306	Cover – Cylinder Head	
337	802592	Plug – Spark	
383	89838	Wrench – Spark Plug	
552	231598	Bushing – Gov. Crank	
562	92613	Bolt – Governor Lever	
592	231082	Nut – Hex.	
614	93306	Pin – Cotter	
615	93307	Retainer – E–Ring	
616	231057	Crank – Governor	
★634	491323	Seal – Oil	
635	66538	Elbow – Spark Plug	
869	261463	Seat – Intake Valve	
870	213316	Seat – Exhaust or Intake Valve **Note:** See Repair Manual	
★978	271736	Gasket – Oil Switch	
979	398194	Cover – Oil GARD® Hole	
982	94139	Cover Screw – Oil GARD®	
1019	491195	Label Kit	

▪ Included in Carburetor Overhaul Kit – Part No. 394989.
★Included in Gasket Set – part No. 391834.

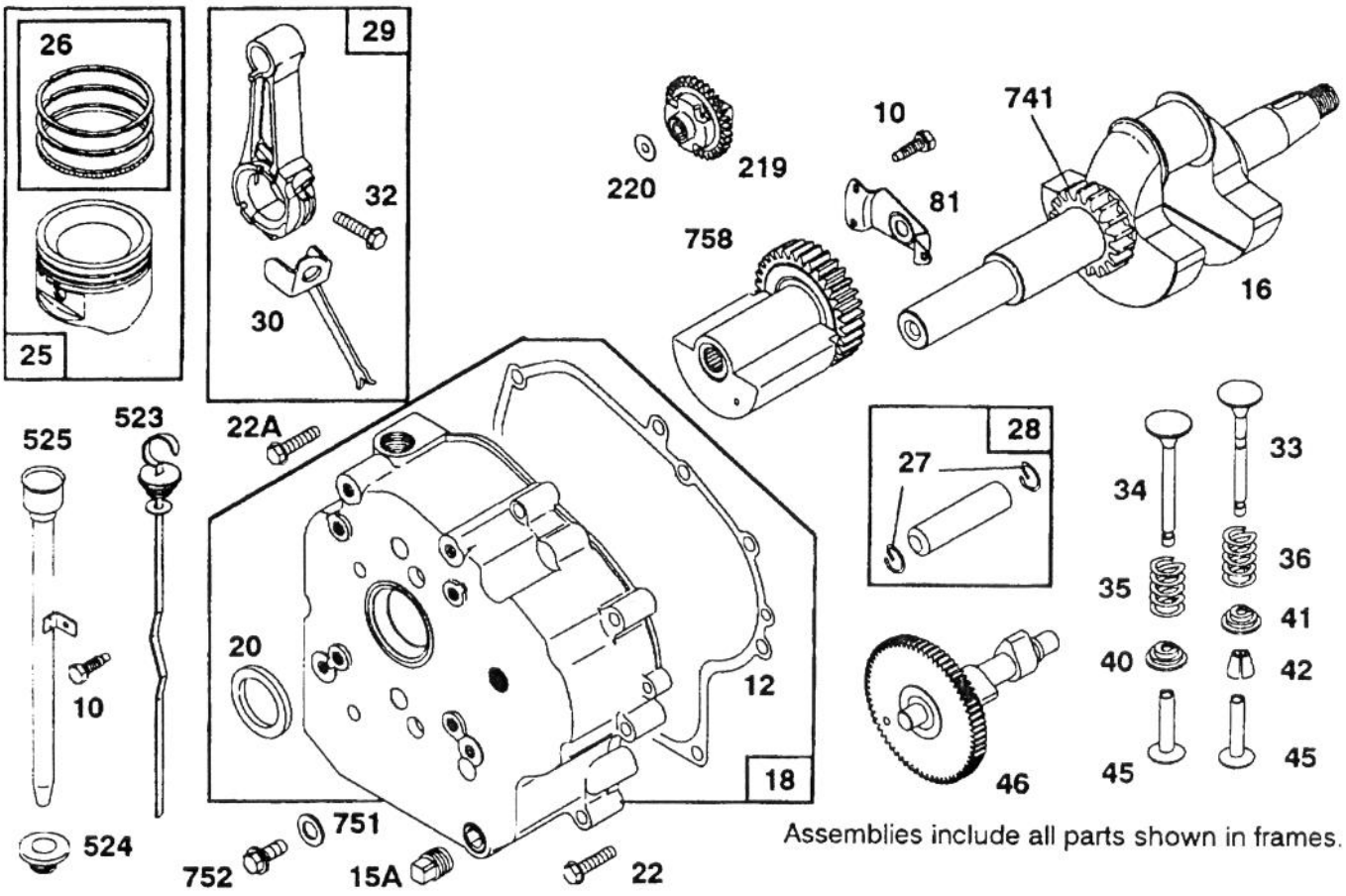

Assemblies include all parts shown in frames.

C–1729

ENGINE BRIGGS & STRATTON MODELS 252416–0756–01 & 252416–0757–01

Ref. No.	Part No.	Description	No. Used
10	94621	Screw – Breather	
★12	271704	Gasket – Crankcase Cover (1/64" Thick)	
★	272219	Gasket – Crankcase Cover (.005" Thick)	
★	272220	Gasket – Crankcase Cover (.009" Thick)	
15A	93418	Plug – Hex. Socket	
16	399723	Crankshaft **Note:** Order Part No. 94196 For Timing Gear Key	
18	492661	Cover Assy. – Crankcase	
★20	291675	Seal – Oil	
22	93585	Screw – Crankcase Cover Mounting (5) **Note:** 94676 Stud – Crankcase Cover Mounting 90366 Lockwasher 91397 Nut – Hex.	
22A	93764	Screw – Crankcase Cover Mounting (1) (2–1/8" Long)	
25	391285	Piston Assembly – (Std.)	
	391287	Piston Assy. (.010" O.S.)	
	391288	Piston Assy. (.020" O.S.)	
	391289	Piston Assy. (.030" O.S.) **Note:** For Chrome Ring Set (Standard Size) Order No. 392331.	
26	391780	Ring Set – Piston (Standard)	
	391781	Ring Set – Piston (.010" O.S.)	
	391782	Ring Set – Piston (.020" O.S.)	
	391783	Ring Set – Piston (.030" O.S.)	
27	260924	Lock – Piston Pin	
28	299691	Pin Assy. – Piston (Standard)	
	391286	Pin Assy. Piston (.005" O.S.)	
29	490348	Rod Assembly – Connecting **Note:** For Connecting Rod With .020" Undersize Crankcase Bore – Order No. 490469.	

★ Included in Gasket Set – Part No. 391834.

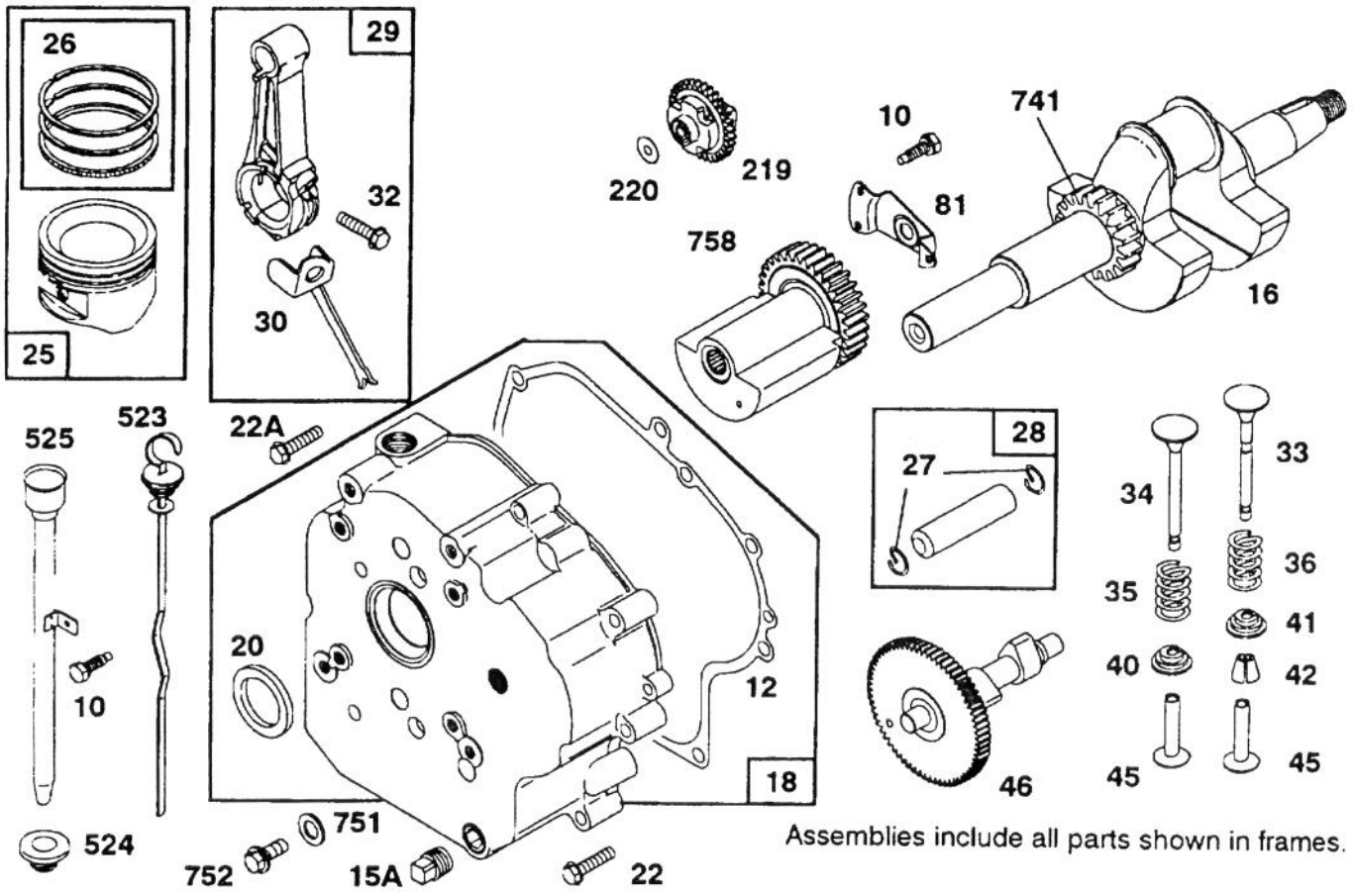

Assemblies include all parts shown in frames.

C-1729

ENGINE BRIGGS & STRATTON MODELS 252416-0756-01 & 252416-0757-01

Ref. No.	Part No.	Description	No. Used
30	222329	Dipper – Connecting Rod	
32	94671	Screw – Connecting Rod	
33	261185	Valve – Exhaustq	
34	261462	Valve – Intake	
35	65906	Spring – Intake Valve	
36	26828	Spring – Exhaust Valve	
40	221596	Retainer – Intake Valve	
41	292260	Rotocoil – Exhaust Valve	
42	93630	Retainer – Exhaust Valve Rotocoil (2)	
45	262248	Tappet – Valve	
46	212897	Gear – Cam	

Ref. No.	Part No.	Description	No. Used
219	494845	Gear – Governor	
220	221551	Washer – Thrust	
523	490665	Cap and Dipstick – Oil Filler	
★524	68838	Seal – Filler Tube	
525	392283	Tube – Oil Filler	
741	262135	Gear – Timing	
751	22355	Washer – Flat	
752	93554	Screw – Plug	
758	491787	Counterweight and Bearing Assembly	

★ Included in Gasket Set – Part No. 391834.

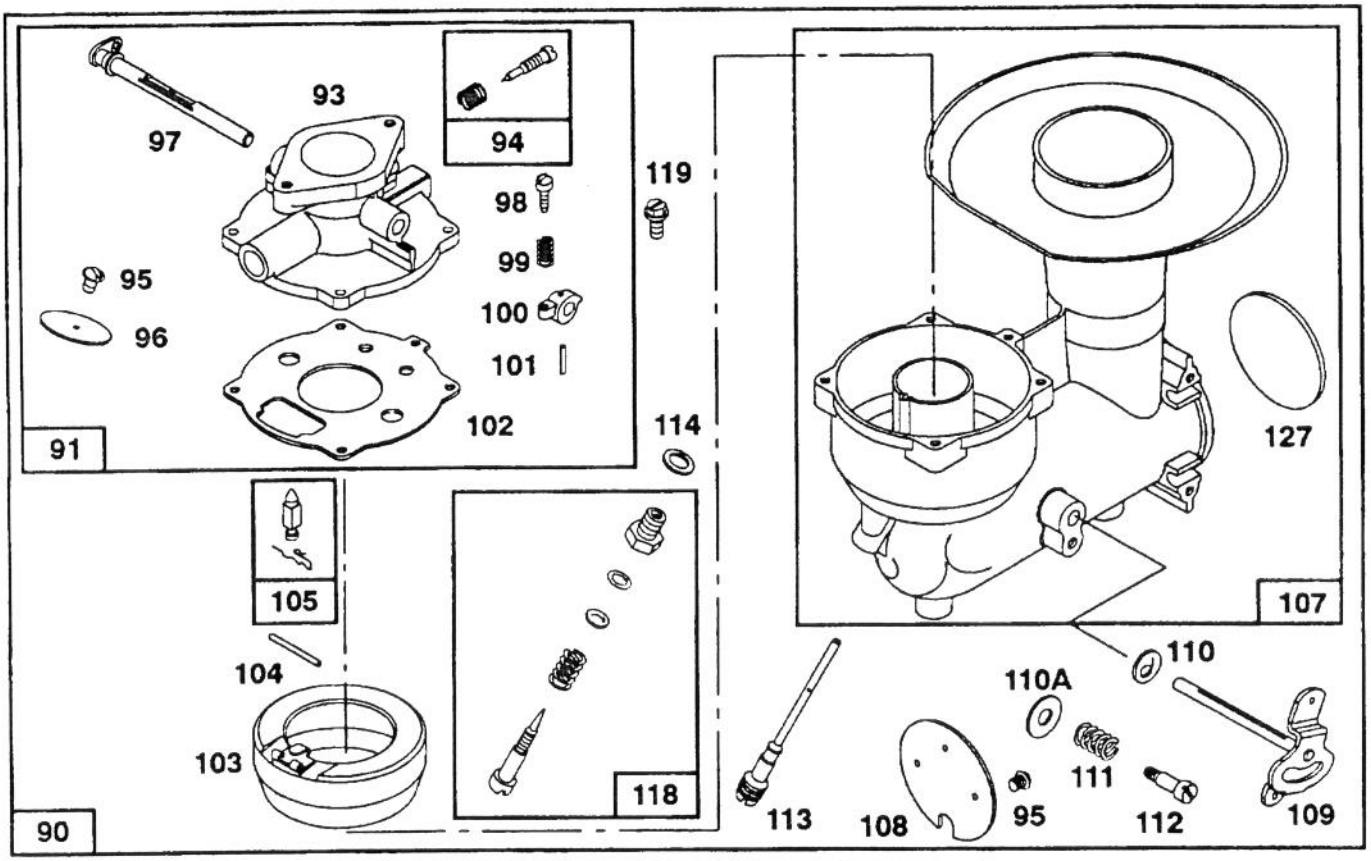

Assemblies include all parts shown in frames.

C–1730

ENGINE BRIGGS & STRATTON MODELS 252416–0756–01 & 252416–0757–01

Ref. No.	Part No.	Description	No. Used
90	399252	Carburetor Assembly	
91	391833	Body Assembly – Upper Carburetor	
93	23108	Bushing – Throttle Shaft	
▪94	292681	Valve Assembly – Carburetor Idle	
95	93499	Screw – Throttle and Choke Valve Mounting	
96	221939	Valve – Throttle	
97	391596	Shaft and Lever – Throttle	
98	91920	Screw – Machine Fil. Hd. (5/8" Long)	
99	26157	Spring – Throttle Adjustment	
100	212904	Stop – Throttle	
101	93043	Pin – Throttle Stop	
★▪102	270268	Gasket – Carburetor Body	
103	298514	Float – Carburetor	
▪104	230896	Pin – Float Hinge	
105	394681	Valve – Fuel Inlet **Note:** 394682 Valve – Fuel Inlet (Includes Seat)	
107	391829	Body Assembly – Lower Carburetor	
108	223781	Valve – Choke	
109	391884	Shaft and Lever – Choke	
110	62889	Washer – Choke Shaft	
110A	222712	Washer – Choke Lever	
111	26155	Spring – Choke Lever	
112	23123	Screw – Choke Lever	
▪113	394730	Nozzle – Carburetor	
▪114	68667	Gasket – Nozzle	
▪118	99525	Valve – Needle **Includes:** 22235 Washer – Brass 26336 Spring 65978 O–Ring 394033 Valve – Needle	
119	94152	Screw – Sem	
▪127	221747	Plug – Welch	

▪ Included in Carburetor Overhaul Kit – Part No. 394989.
★Included in Gasket Set – part No. 391834.

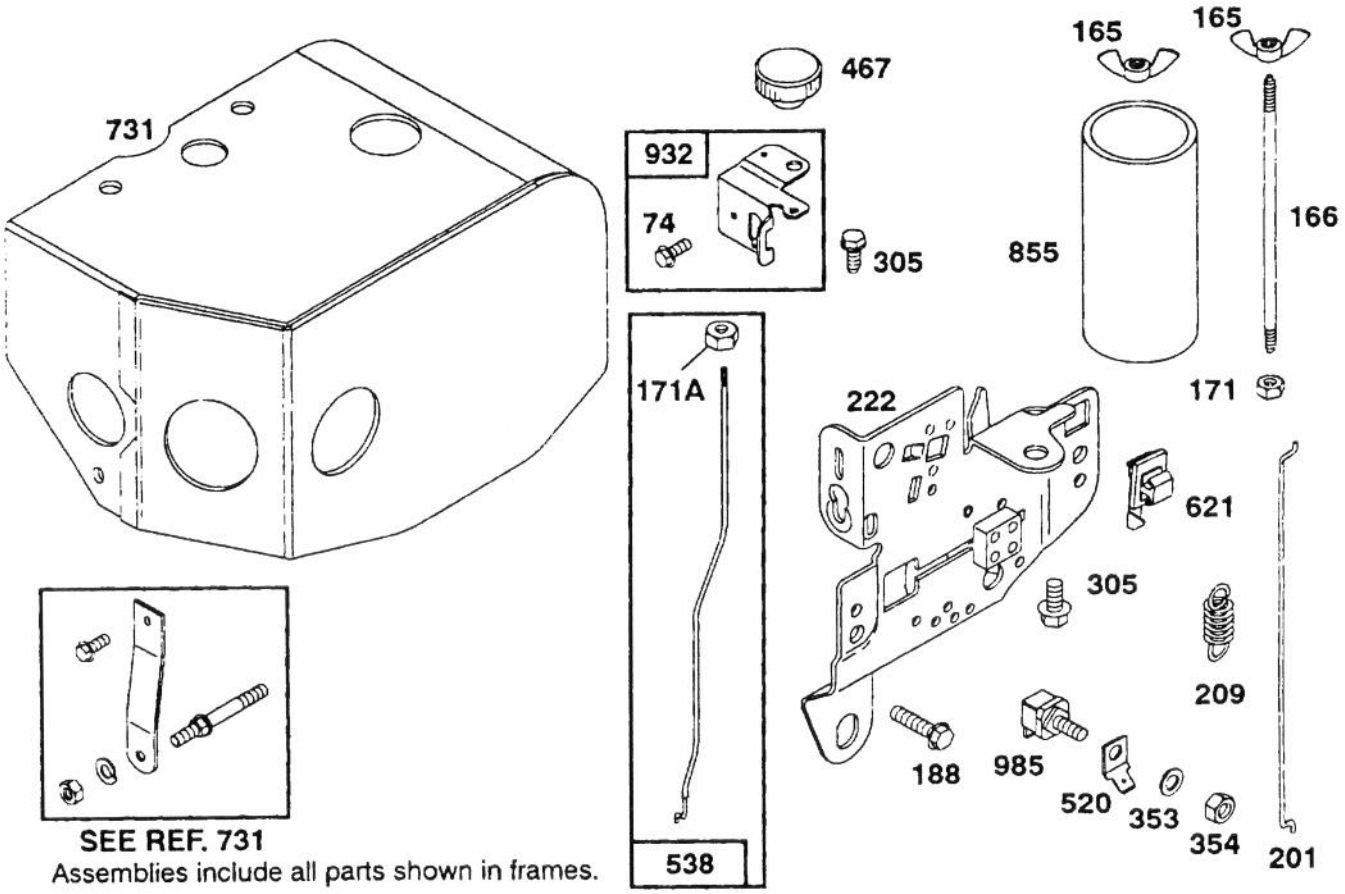

C-1731

ENGINE BRIGGS & STRATTON MODELS 252416-0756-01 & 252416-0757-01

Ref. No.	Part No.	Description	No. Used
74	93042	Screw – Sem	
165	94289	Nut – Wing	
166	231007	Stud – Air Cleaner	
171	92129	Nut – Hex. (1/4-28)	
171A	90356	Nut – Control Rod	
188	93535	Screw – Sem	
201	261236	Link – Governor	
209	260695	Spring – Governor	
222	399152	Plate – Gov. Control	
305	94608	Screw – Sem	
353	92791	Washer – Lock	
354	90576	Nut – Hex.	
467	391908	Knob – Choke Rod	
520	93722	Terminal – Spade	
538	396085	Rod – Control	

Ref. No.	Part No.	Description	No. Used
621	396847	Switch – Stop	
731	490173	Hood – Snow **Uses:** 223825 Strap – Support 93705 Screw (Hood to Strap) 93490 Screw (Hood to Blower Hsg.) 93640 Screw – Sem (Hood to Cyl. Head) 90832 Lockwasher	
855	231145	Stack – Carburetor **Uses:** 222726 Strap	
932	396084	Guide – Control Rod	
985	398525	Insulator Assembly	

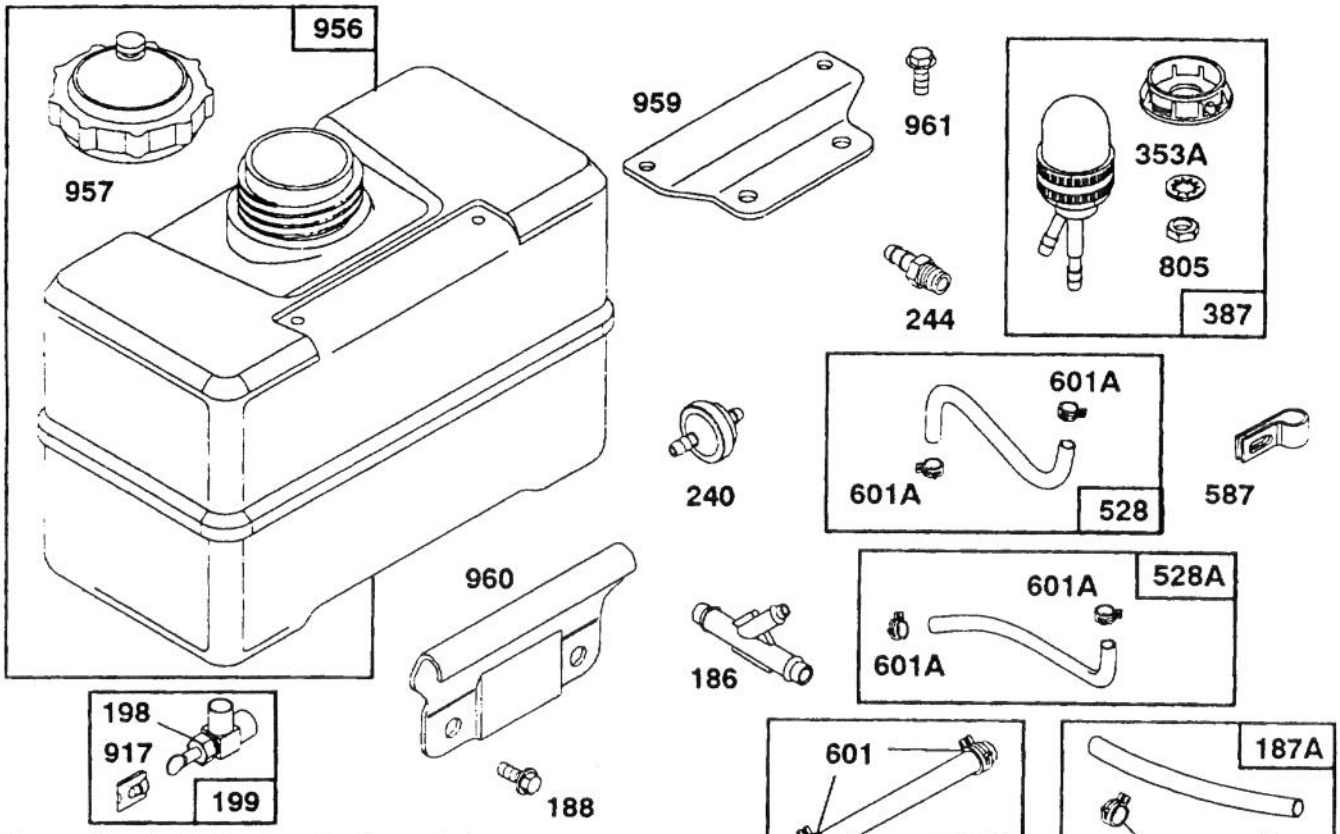

Assemblies include all parts shown in frames.

C–1732

ENGINE BRIGGS & STRATTON MODELS 252416–0756–01 & 252416–0757–01

Ref. No.	Part No.	Description	No. Used
186	280727	Hose Connector	
187	296004	Hose – Fuel (23")	
187A	393815	Hose – Fuel (11")	
188	93535	Screw – Sem	
198	293934	Valve – Fuel Shut Off	
199	399949	Outlet – Fuel Tank	
240	298090	Filter – Fuel	
244	230318	Connector – Fuel Pipe	
353A	94281	Washer – Lock	
387	399255	Primer Group	
528	399256	Hose – Primer (Includes Filter)	
528A	399254	Hose – Primer	

Ref. No.	Part No.	Description	No. Used
587	220162	Clamp – Primer Hose	
601	93053	Clamp – Fuel Hose (Green) **Note:** 93807 Clamp – Fuel Hose (Black)	
805	94189	Nut – Primer Retainer	
917	223271	Valve Handle – Fuel Shut Off	
956	493337	Tank Assembly – Fuel	
957	397975	Cap – Fuel Tank	
959	223754	Bracket – Fuel Tank (Upper)	
960	223755	Bracket – Fuel Tank (Lower)	
961	94095	Screw – Tank Mounting	

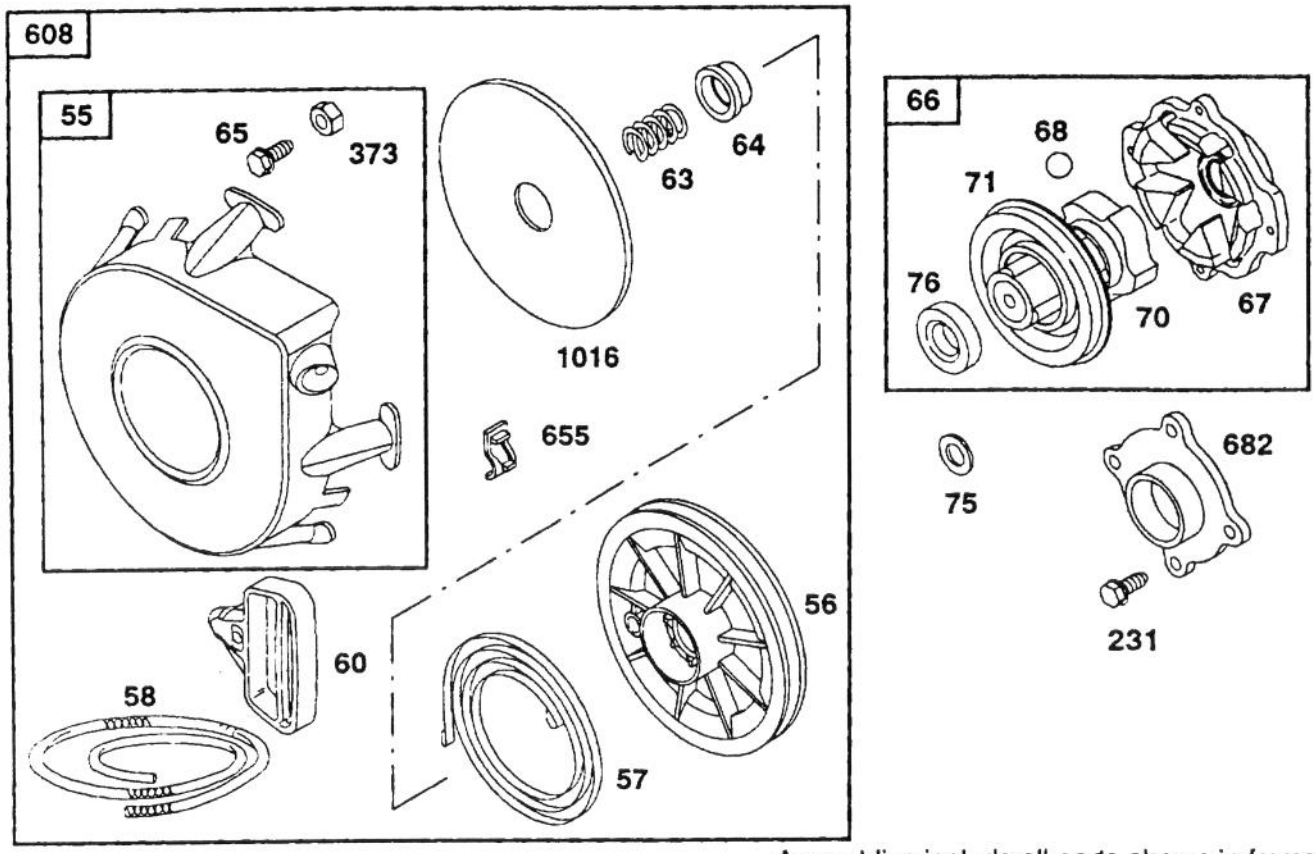

Assemblies include all parts shown in frames.

C–1733

ENGINE BRIGGS & STRATTON MODELS 252416–0756–01 & 252416–0757–01

Ref. No.	Part No.	Description	No. Used
55	398099	Housing – Rewind Starter	
56	295871	Pulley – Rewind Starter (Includes 63" Rope)	
57	490179	Spring – Rewind Starter	
58	66884	Rope – Rewind Starter (63" Long)	
60	398101	Grip – Starter Rope	
63	260414	Spring – Ratchet	
64	230543	Adapter – Ratchet Spring	
65	94128	Screw – Rewind Starter	
66	399671	Clutch Assy. – Rewind Starter	
67	394897	Housing – Clutch	

Ref. No.	Part No.	Description	No. Used
68	63770	Ball – Clutch	
70	298799	Ratchet – Rewind Starter Clutch	
71	394506	Washer – Retainer	
75	224061	Washer – Spring	
76	68238	Washer – Ratchet Sealing	
231	94238	Screw – Sem	
373	92987	Nut – Hex.	
608	397982	Starter Assy. – Rewind	
655	222598	Anchor – Spring	
682	211516	Shield – Starter Clutch	
1016	490817	Spacer	

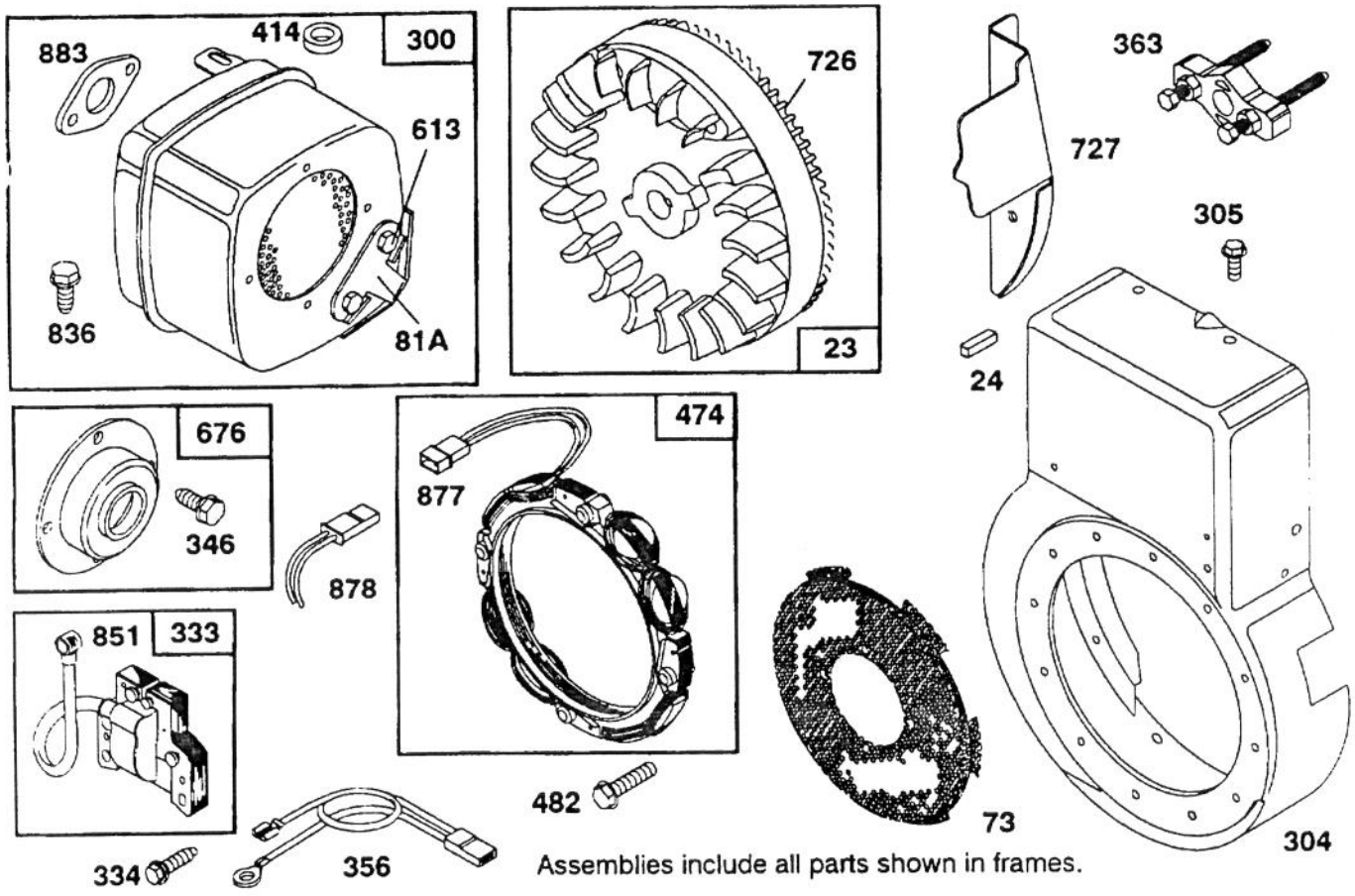

Assemblies include all parts shown in frames.

C–1734

ENGINE BRIGGS & STRATTON MODELS 252416–0756–01 & 252416–0757–01

Ref. No.	Part No.	Description	No. Used
23	391988	Flywheel and Ring Gear Assy. – Magneto	
24	222698	Key – Flywheel	
81A	223016	Lock – Screw	
300	491626	Muffler – Exhaust	
304	490446	Housing – Blower	
305	94608	Screw – Sem	
333	398811	Armature – Magneto	
334	94731	Screw – Armature Mounting	
346	93705	Screw – Sem	
356	398874	Wire – Ground	
363	19203	Puller – Flywheel	
414	231109	Spacer – Muffler	
474	393474	Stator – Alternator Dual Circuit (Model 252416–0757–01)	
★★	391595	Stator – Alternator, D.C. (Model 252416–0756–01)	
482	93621	Screw – Sem	

Ref. No.	Part No.	Description	No. Used
613	93927	Screw – Hex. Hd.	
676	396903	Deflector – Exhaust	
726	392134	Gear – Flywheel Ring (Includes Mtg. Parts)	
727	223597	Guard – Ring Gear 221968 Guard – Upper Ring Gear **Use:** 93712 Screw 93713 Lockwasher To Mount Guards	
836	92747	Screw – Sem	
851	221798	Terminal – Ignition Cable	
877	393456	Diode and Connector Assy. Dual Circuit (Model 252416–0757–01)	
878	393362	Alternator Harness Assy. Dual Circuit (Model 252416–0757–01)	
★883	270917	Gasket – Exhaust	

★ Included in Gasket Set – Part No. 391834

★★ Not Illustrated

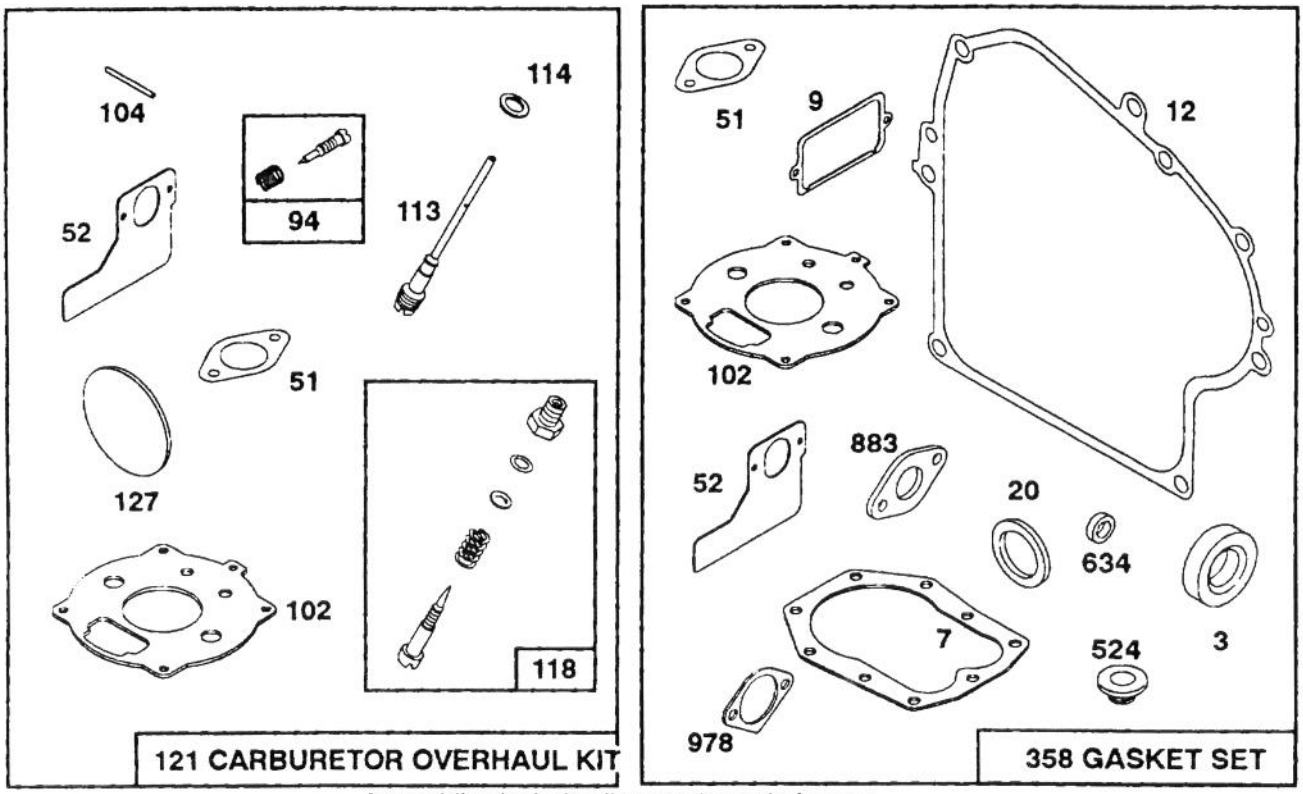

Assemblies include all parts shown in frames.

C–1735

ENGINE BRIGGS & STRATTON MODELS 252416–0756–01 & 252416–0757–01

Ref. No.	Part No.	Description	No. Used
★3	391086	Seal – Oil	
7	271866	Gasket – Cylinder Hd.	
★9	27803	Gasket – Valve Cover	
★12	271704	Gasket – Crankcase Cover (1/64" Thick)	
★	272219	Gasket – Crankcase Cover (.005" Thick)	
★	272220	Gasket – Crankcase Cover (.009" Thick)	
★20	291675	Seal – Oil	
★▪51	270267	Gasket – Carb. Mtg.	
★▪52	270872	Gasket – Intake Elbow Mtg.	
▪94	292681	Valve Assembly – Carburetor Idle	
★▪102	270268	Gasket – Carburetor Body	
▪104	230896	Pin – Float Hinge	

Ref. No.	Part No.	Description	No. Used
▪113	394730	Nozzle – Carburetor	
▪114	68667	Gasket – Nozzle	
▪118	99525	Valve – Needle **Includes:** 22235 Washer – Brass 26336 Spring 65978 O–Ring 394033 Valve – Needle	
121	394989	Carburetor Overhaul Kit	
▪127	221747	Plug – Welch	
358	391834	Gasket Set	
★524	68838	Seal – Filler Tube	
★634	491323	Seal – Oil	
★883	270917	Gasket – Exhaust	
★978	271736	Gasket – Oil Switch	

▪ Included in Carburetor Overhaul Kit – Part No. 394989.
★Included in Gasket Set – part No. 391834.

TORO PART NUMBER INDEX

Part No.	Description	Pg. No.	Ref. No.	Qty.
3–0750	Washer – Retaining	1	2	2
3–4244	Pulley – Idler	7	6	2
5–2490	Bolt – Shoulder	7	35	2
7–0045	Seal – Oil	3	2	2
11–0590	Screw – Hex Hd.	4	25	4
12–3270	Screw	6	49	3
12–8789	Impeller Bearing Assembly	2	*	1
12–8949	Loose Parts	4	*	1
13–3559	Gear – Bevel Reverse 36T	6	59	1
17–7030	Bolt – Auger	2	59	2
20–0980	Bearing – Auger	2	57	2
20–0990	Flange – Bearing (Inner)	2	56	2
20–1000	Flange – Bearing (Outer)	2	58	2
25–5090	Spacer – Auger Hub	2	55	2
29–9570	Bushing – Yoke	6	45	1
37–6560	Bushing – Input	3	10	1
38–7820	Bearing – Ball	5	36	2
40–5940	Switch – On/Off	9	21	1
52–2861	Washer	2	43	4
53–7660	Decal – Danger Chute	1	*	1
53–7670	Decal – Danger Auger	1	5	1
54–9810	Assembly – Wire	9	*	1
54–9810	Wire Assembly	10	20	1
54–9870	Headlamp Assembly	10	*	1
62–0120	Gear – Helical	3	15	1
62–0170	Wheel – Index	8	41	1
62–0180	Tang – Index	8	5	1
62–0200	Gear – 27T	5	31	1
62–0210	Gear – 33T	5	43	1
62–0220	Gear – 34T	5	30	1
62–0240	Gear – 45T	5	29	1
62–0250	Gear – 29T	5	32	1
62–0260	Gear – 51T	5	42	1
62–0280	Latch – Lock	9	6	1
62–0290	Cam – Release	9	4	1
62–0300	Tang – Locking	9	3	1
62–0310	Key – Shift	6	56	2
62–0320	Sleeve	5	28	1
62–0330	Shaft – Intermediate	5	40	1
62–0340	Sleeve – Gear 19T	5	34	1
62–0350	Pinion – Bevel 19T	6	53	1
62–0360	Gear – Compound 19T/41T	5	41	1
62–0370	Gear – 41T	5	35	1
62–0380	Hub – Pulley	6	52	1
62–0430	Collar – Shift (Speed)	5	3	1
62–0470	Latch – Arm	7	17	1
62–0480	Gear Case – Lower	5	44	1
62–0490	Gear Case – Upper	5	24	1
62–0500	Gear – 15T	6	48	1
62–0722	Housing – 32"	1	6	1
62–0820	Gear – Worm	1	22	1
62–0840	Chute Assembly	1	19	1
62–0860	Link – Gearshift	5	18	1
62–0870	Lever – Gear Shift	5	16	1
62–0880	Lever – Direction Shift	5	5	1
62–0920	Sheave Half – Traction	4	7	1
62–0930	Hub – Sheave	4	5	1
62–0940	Sheave Half – Impeller	4	3	1
62–0970	Pin – Idler	7	9	1
62–1000	Guard – Chain R.H.	7	30	1
62–1010	Guard – Chain L.H.	7	28	1
62–1020	Button – Detent	5	10	1
62–1040	Yoke–Shift	5	26	2
62–1050	Lever – Impeller	9	8	1
62–1060	Lever – Traction	9	24	1
62–1070	Bushing – Lever	9	11	2
62–1080	Shaft – Output	5	37	1
62–1100	Lever – Latch	8	7	1
62–1110	Lever – Index Wheel	8	3	1
62–1120	Lever – Reverse	8	22	1
62–1130	Lever – Reverse	8	20	1
62–1140	Cover – Latch	8	12	1
62–1150	Bushing – Worm	3	16	1
62–1160	Bushing – Intermediate	6	46	4
62–1170	Bushing – Flange	5	38	2
62–1180	Bushing – Output (Flange)	5	1	1
62–1190	Bracket – Bellcrank	5	22	1
62–1210	Bushing – Idler	7	12	1
62–1230	Washer – Rubber	9	33	1
62–1260	Arm – Traction Idler	7	10	1
62–1280	Arm – Impeller Idler	7	11	1
62–1290	Knob – Shift	8	1	1
62–1300	Pulley – Impeller	1	24	1
62–1310	Pulley – Traction	6	50	1
62–1320	Knob – Chute Control	9	17	1
62–1330	Bolt – Shoulder	7	24	2
62–1350	Bushing – Output	5	27	2
62–1381	Handle – R.H.	9	9	1
62–1430	Retainer – Chute	1	11	3
62–1440	Cover – Engine Frame	2	32	1
62–1460	Gear – Universal	9	32	2
62–1470	Base – Lockout	8	42	1
62–1490	Plate – Guide	9	15	1
62–1520	Cover – Knob	9	19	1
62–1532	Shaft – Auger (32")	3	1	1
62–1640	Lever – Trip	9	12	1
62–1650	Spring – Torsion	8	6	1
62–1690	Cover – Detent	5	11	1
62–1700	Lever – Lockout	8	19	1
62–1710	Spring – Flat	8	16	1
62–1720	Rod – Chute Gear	1	23	1
62–1740	Bracket – Cable	5	7	1
63–2030	Rod – Cross	9	27	1
63–2080	Cover – Belt (Upper)	1	28	1
63–2112	Axle Assembly	7	29	1
63–2150	Frame – Control	8	23	1
63–2160	Rod – Chute Crank	9	16	1
63–2170	Cover – Lever Lock	9	1	1
63–2180	Bracket – Gear	1	7	1
63–2190	Pin – Gearshift Link	5	15	1
63–2200	Cable – Latch	8	39	1
63–2210	Cable – Gearbox	8	38	1
63–2220	Spring – Extension	8	8	1
63–2230	Spring – Extension	8	21	1
63–2240	Spring – Extension	8	17	1
63–2250	Bushing – Axle	7	26	2
63–2270	Spring – Torsion	8	40	1
63–2280	Washer – Thrust	5	33	1
63–2300	Retainer – Cable	1	26	1
63–2310	Decal – Hot Surface	4	*	1
63–2320	Decal – Primer	4	14	1
63–2340	Decal – Throttle	4	13	1
63–2360	Decal – Choke	4	15	1
63–2460	Decal – Choke	4	*	1
63–2480	Decal – #2	8	10	1
63–2530	Decal – Panel Front	9	36	1
63–2550	Decal – Panel Top	9	*	1
63–2600	Bellcrank	5	20	1
63–2610	Pin – Tang	8	9	1
63–2630	Bracket – Shift	8	33	1

*Not Illustrated

TORO PART NUMBER INDEX (Cont.)

Part No.	Description	Pg. No.	Ref. No.	Qty.
63-2640	Joint - Ball	8	36	1
63-2640	Joint- Ball	4	19	1
63-2650	Screw - Shoulder	8	18	2
63-2670	Plate - Chute Retainer	1	10	3
63-2700	Cable - Impeller	9	41	1
63-2710	Cable - Traction	9	40	1
63-2740	Spring - Torsion	7	36	1
63-2752	Auger - R.H.	2	54	1
63-2762	Auger - L.H.	2	*	1
63-2820	Arm - Brake	7	2	1
63-2830	Rod - Shift (Lower)	8	34	1
63-2850	Bracket - Idler Arm	7	3	1
63-2870	Spring - Extension	7	14	2
63-2881	Spring - Torsion	7	13	1
63-2890	Spring - Compression	5	9	1
63-2900	Washer - Plastic	1	17	2
63-2910	Spring - Torsion	9	7	1
63-2920	Spring - Extension	5	4	1
63-2930	Chain - Drive	4	21	1
63-2953	Belt - Traction	4	6	1
63-2964	Belt - Impeller	4	4	1
63-2990	Frame - Transmission	4	23	1
63-3020	Guard - Chute	1	14	1
63-3050	Decal - Lever	9	25	1
63-3130	Clip - Chute Guard	1	12	1
63-3290	Cover - Cable	1	29	1
63-3340	Washer	7	22	4
63-3380	Spacer - Traction Lever	9	22	1
63-3410	Bolt - Shoulder	5	13	1
63-3420	Harness - Wire	9	*	1
63-3450	Bearing - Impeller	2	39	1
63-3470	Decal - Warning	7	*	1
63-3470	Decal - Warning	9	*	1
63-3740	Decal - Danger Chute	1	20	1
63-8360	Key - Switch	9	20	1
66-6840	Decal - Hot Surface	4	12	1
66-6850	Decal - Panel Top	9	14	1
66-6860	Decal - Warning	9	38	1
66-6860	Decal - Warning	7	40	1
66-6900	Assembly - Wire, Adapter	9	*	1
66-6900	Wire Assembly - Adaptor	10	*	1
66-6980	Frame - Engine	2	31	1
66-7720	Rod - Latch	7	18	1
66-7730	Clevis	8	30	1
66-7740	Pivot Arm Assembly	7	23	2
66-7760	Blade - Scraper	2	45	1
66-7811	Shaft - Impeller	3	6	1
66-7821	Plate - Side R.H.	1	3	1
66-7831	Plate - Side L.H.	2	46	1
66-7850	Handlegrip	9	10	2
66-7920	Impeller	2	50	1
66-8010	Spacer	2	51	2
66-8030	Transmission Assembly	4	22	1
66-8060	Pad - Brake	7	42	1
66-8091	Handle - L.H.	9	29	1
66-8100	Panel - Control	9	13	1
67-5870	Gear - Bevel 36T	6	57	1
67-5880	Collar - Shift	6	58	1
67-9240	Rod - Shift (Upper)	8	2	1
67-9250	Retainer - Shift Rod	8	28	1
68-4140	Plate - R.H.	2	*	1
68-4150	Plate - L.H.	2	34	1
68-4310	Gear - 26T	6	47	1
68-4320	Sleeve - Shift	6	55	1
68-7110	Mount - Lamp	10	6	1
68-7140	Bolt - U	10	10	1
68-7452	Auger - R.H.	2	*	1
68-7462	Auger - L.H.	2	*	1
68-7510	Guide - Belt	4	8	1
68-8410	Cover - Belt (Lower)	2	41	1
74-1440	Skid Assembly	2	44	2
74-1562	Auger Gearbox Assembly	2	53	1
74-1570	Gearcase Assembly - L.H.	3	13	1
74-1580	Gearcase Assembly - R.H.	3	4	1
88-0810	Spring - Extension	9	39	1
218-15	Bulb - Sealed Beam	10	19	1
218-473	Boot - Switch	10	1	1
218-552	Bucket - Headlamp	10	3	1
218-553	Switch Assembly	10	2	1
218-554	Bracket	10	4	1
218-556	Bracket - U	10	16	1
2210-250	Screw	9	2	4
2210-250	Screw - Hex. Washer Hd.	4	16	1
231-123	Tire	7	34	2
232-48	Tube - Inner	7	33	2
241-127	Rim - Wheel	7	32	2
252-59	Washer - Thrust	5	2	3
252-71	Bearing - Thrust	3	5	2
252-76	Bearing - Thrust	3	9	1
252-78	Washer - Thrust	3	8	2
252-80	Washer - Thrust	7	27	4
252-80	Washer - Thrust	2	36	1
253-149	Seal - Input	3	11	1
256-237	Bushing - Sleeve	3	3	2
256-296	Bushing - Nyliner	8	31	2
257-9	Washer - Thrust	8	14	1
257-10	Washer - Thrust	5	39	4
281-1	Plug - Pipe Sq. Hd.	3	14	1
283-3	Pin - Clevis	5	19	1
288-10	Cap - Pipe	4	9	1
289-45	Pipe - Oil Drain	4	10	1
321-3	Screw - Hex Hd.	2	60	8
321-9	Screw - Cap Hex. Hd.	8	29	1
321-15	Screw - Cap Hex Hd.	6	54	1
321-44	Screw - Hex. Hd.	2	52	2
322-13	Screw - Hex. Flange Hd.	10	15	1
323-6	Screw - Hex Hd.	1	1	2
323-7	Screw - Hex Hd.	7	8	2
3210-1	Screw - Hex Hd	4	27	2
3212-8	Screw - Hex. Hd.	4	1	1
3217-7	Nut - Hex.	10	8	1
3220-3	Nut - Jam	4	28	1
3220-3	Nut - Jam	8	35	1
3230-2	Bolt - Carriage	1	8	1
3230-23	Screw - Carriage	2	48	11
3231-2	Bolt - Carriage	10	17	1
3234-5	Screw - Hex. Washer Hd.	2	33	10
3234-7	Screw - Hex Flange Hd.	4	18	4
3234-7	Screw - Hex Flange Hd.	9	26	6
3234-7	Screw - Hex Flange Hd.	7	41	2
3234-13	Screw - Hex. Hd.	7	5	1
3234-28	Screw - Hex Flange Hd.	1	4	12
3242-4	Screw - Set Sq. Hd.	1	25	2
3253-4	Washer - Lock	4	26	2
3253-6	Washer - Lock	4	2	1
3253-21	Washer - Lock	10	7	1
3255-8	Washer - Lock	10	5	2
3256-1	Washer - Flat	7	21	2
3256-1	Washer - Flat	8	27	2
3256-14	Washer - Flat	1	16	1

*Not Illustrated

TORO PART NUMBER INDEX (Cont.)

Part No.	Description	Pg. No.	Ref. No.	Qty.
3256–14	Washer – Flat	9	43	2
3256–23	Washer – Flat	10	11	2
3256–23	Washer – Flat	8	24	3
3256–23	Washer – Flat	2	42	1
3256–61	Washer – Flat	1	21	1
3257–10	Key – Woodruff	3	12	1
3257–23	Key – Woodruff	2	35	1
3269–23	Rivet	2	30	4
3272–1	Pin – Cotter	5	17	1
3274–13	Screw – Machine	1	13	3
3290–243	Pin – Klik	7	38	2
3290–320	Nut – Push	8	15	1
3290–320	Nut – Push	9	18	2
3290–326	Nut – Push	1	15	2
3290–359	Screw	9	28	1
3290–378	Tie – Cable	9	30	4
3290–378	Tie Wrap	10	9	2
3290–422	Nut – Push	8	4	1
3290–456	Washer – Belleville	8	37	1
3290–461	Washer – Belleville	7	16	2
3290–461	Washer – Belleville	4	24	4
3290–476	Fastener – Panel	7	37	1
3290–477	Washer – Curved	5	14	1
3296–2	Nut – Lock	1	9	4
3296–2	Nut – Lock	9	23	1
3296–23	Nut – Lock	7	25	2
3296–29	Nut – Lock	10	12	2
3296–29	Nut – Lock	8	25	7
3296–29	Nut – Lock	2	37	16
3296–39	Nut – Lock	7	15	2
3296–39	Nut – Lock	4	20	1
3296–39	Nut – Lock	8	32	1
3296–42	Nut	9	42	4
3296–42	Nut – Lock	7	4	1
3296–42	Nut – Lock	5	23	1
3296–42	Nut – Lock	8	26	1
3296–42	Nut – Lock	2	49	10
3296–47	Nut – Lock	9	37	4
3296–47	Nut – Lock	7	39	2
3296–47	Nut – Lock	2	47	12
3296–59	Nut – Lock	7	7	2
32104–71	Screw – Pan Hd.	5	12	1
32104–76	Screw – Self Tapping	9	34	2
32104–95	Screw – Hex Washer Hd.	5	21	2
32104–118	Screw – Pan Hd.	8	11	2
32104–118	Screw – Pan Hd.	9	35	2
32104–121	Screw – Hex Flange Hd.	7	31	3
32120–46	Ring – Retaining	7	1	2
32120–46	Ring – Retaining	8	13	1
32121–9	Pin – Roll	7	19	2
32121–50	Pin – Roll	9	31	2
32121–106	Pin – Coil	5	6	3
32122–32	Screw	1	18	1
32128–20	Nut – Lock	4	17	4
32128–32	Nut – Flange Lock	6	51	1
32128–35	Nut – Flange Lock	10	18	1
32144–4	Screw – Hex Flange Hd.	1	27	6
32144–4	Screw – Hex Flange Hd.	7	20	2
32144–4	Screw – Self Tapping	5	8	2
32144–86	Screw – Hex Washer Hd.	5	25	6
32144–110	Screw – Hex Washer Hd.	3	17	9
32151–33	Ring – Snap	3	7	1
32151–66	Ring – Retaining	9	5	1
505–101	Grease – 14.5 oz. Cartridge	6	*	1
505–129	Sealant – 100g Tube	3	*	1

Accessories

Description	Model / Parts No.
Tire Chains Kit	63–3040
Drift Breaker	66–7980
Snow Cab	68–9500
Differential Kit	38038
110V Starter Kit	37–4630
Light Kit	69–7940
Weight Kit	74–1190
12V Starter Kit	66–7700

*Not Illustrated

MAINTENANCE RECORD

Date								

MAINTENANCE RECORD

Date								