FROM NO. 3316–353

TORO®

MODEL NO. 38190–4900001 & UP
MODEL NO. 38191–4900001 & UP

PARTS CATALOG

CCR 1000™
Snowthrower

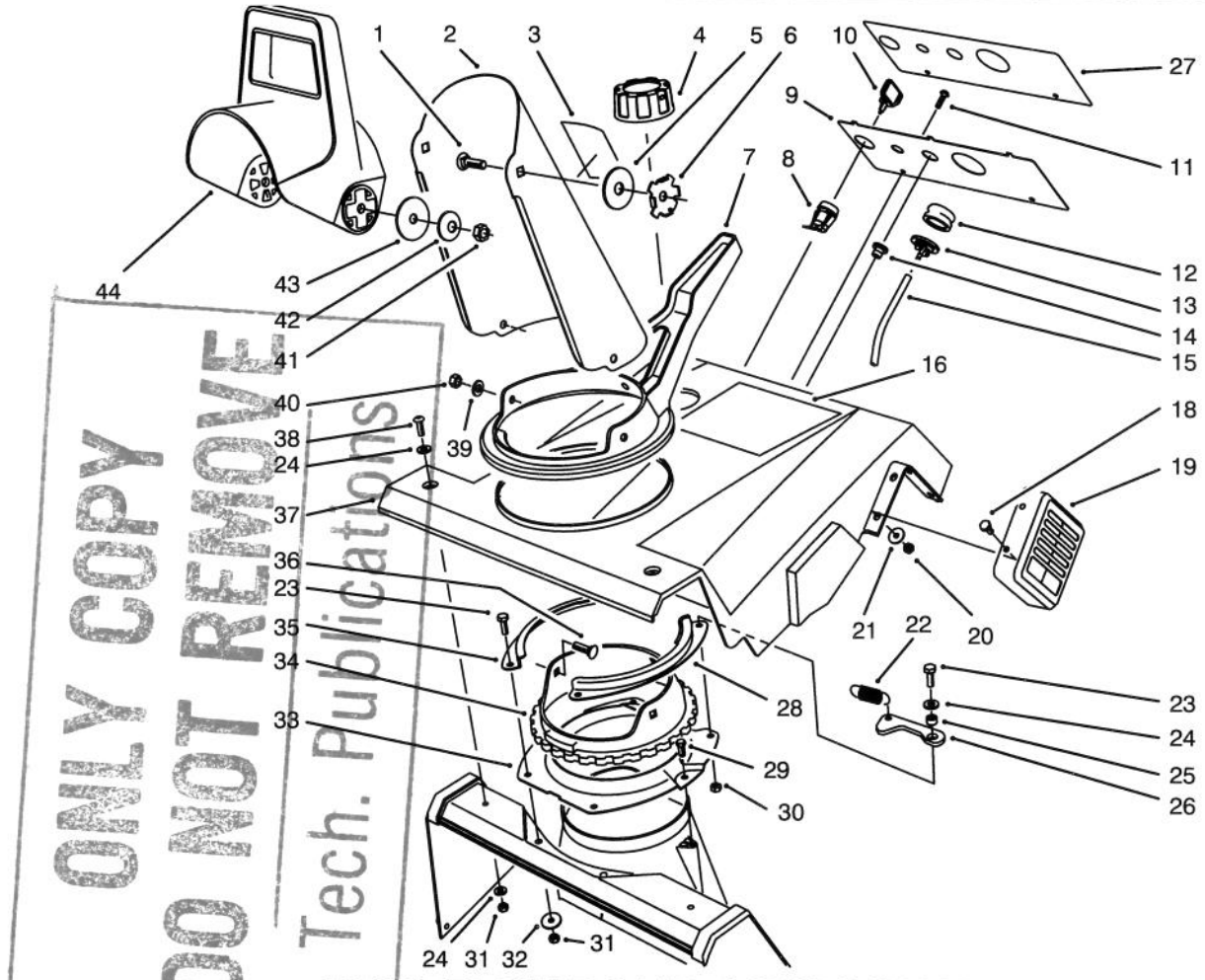

ONLY COPY
DO NOT REMOVE
Tech. Publications

C–1740

UPPER SHROUD ASSEMBLY

Ref. No.	Part No.	Description	No. Used
1	3230–22	Bolt – Carriage	2
2	60–8690	Chute	1
3	63–3740	Decal – Danger (Model No. 38190)	1
*	53–7660	Decal – Danger (Model No. 38191)	1
4	55–3573	Gas Cap Assembly	1
5	20–4320	Washer – Rubber	2
6	55–8950	Plate – Friction	2
7	71–4940	Handle – Chute	1
8	40–5940	Switch – On–Off	1
9	71–5240	Panel – Control	1
10	63–8360	Key – Ignition	1
11	32144–53	Screw – Slotted Flange Hd.	2
12	66–7460	Bulb – Primer	1
13	44–2750	Body – Primer	1

Ref. No.	Part No.	Description	No. Used
14	23–7470	Guide – Rope	1
15	44–3173	Hose – Primer	1
16	71–5490	Decal – Shroud	1
18	3290–359	Screw – Cap Hex. Hd.	4
19	71–5340	Guard – Muffler	1
20	3296–2	Nut – Lock	4
21	3256–61	Washer – Flat	4
22	71–5590	Spring – Extension	1
23	321–4	Screw – Cap Hex. Hd.	4
24	3256–22	Washer – Flat	5
25	55–9370	Spacer – Detent Arm	1
26	80–4610	Arm – Detent	1
27	88–1020	Decal – Control Panel (Model No. 38190)	1
*	88–1040	Decal – Control Panel (Model No. 38191)	1

*Not Illustrated

© The TORO Company –1993
All Rights Reserved

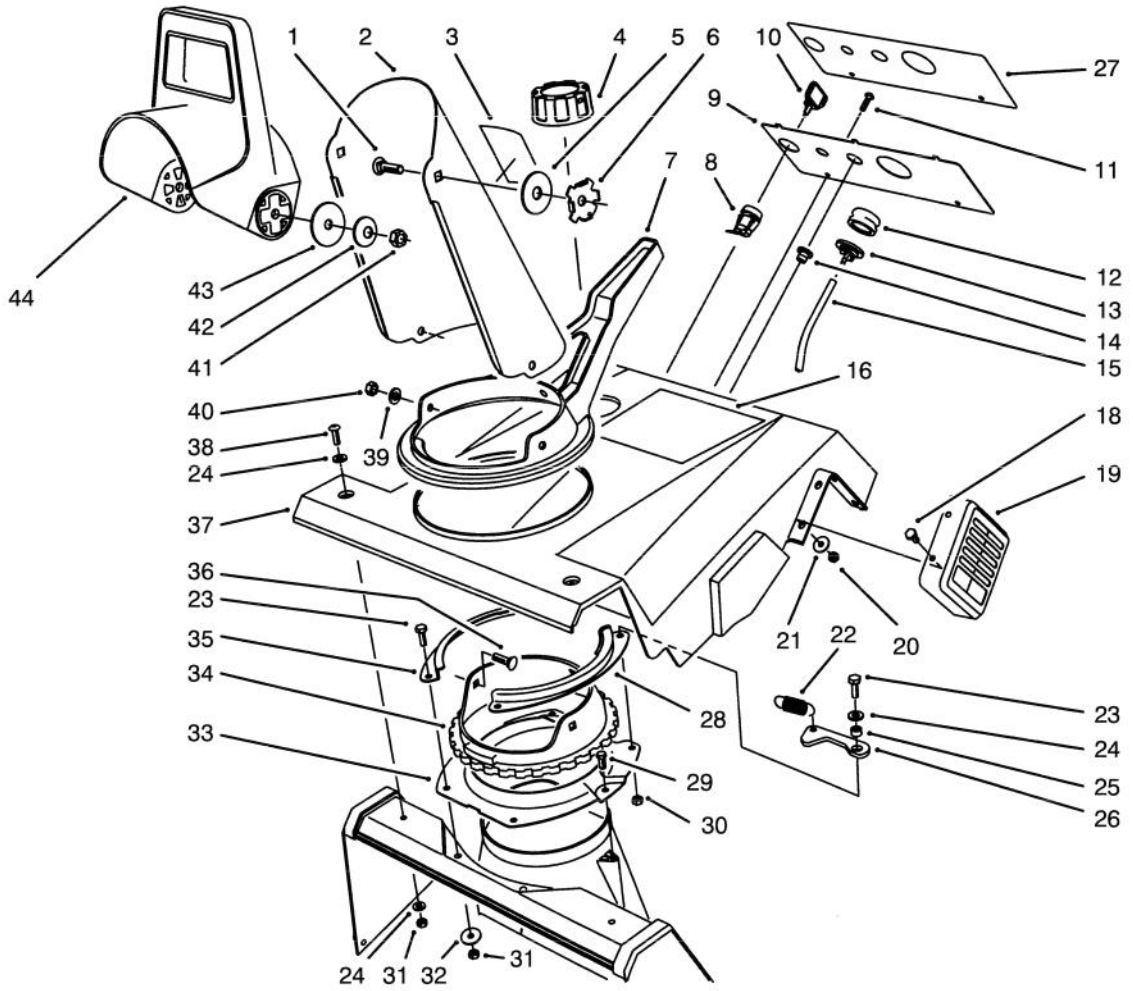

UPPER SHROUD ASSEMBLY (Continued)

Ref. No.	Part No.	Description	No. Used
28	71–4980	Retainer – Chute Ring L.H.	1
29	46–8092	Screw – Hex. Flange Hd.	2
30	3296–56	Nut – Lock	1
31	3296–42	Nut – Lock	4
32	3256–22	Washer – Flat	2
33	55–8921	Support – Chute Ring	1
34	71–4950	Ring – Chute	1
35	71–4990	Retainer – Chute Ring R.H.	1
36	3230–16	Bolt – Carriage	3

Ref. No.	Part No.	Description	No. Used
37	80–4810	Shroud – Upper	1
38	3250–32	Screw – Pan Hd.	2
39	3256–70	Washer – Flat	3
40	32149–1	Nut – Keps	3
41	3296–29	Nut – Lock	2
42	3290–456	Washer – Belleville	2
43	3256–68	Washer – Flat	2
44	56–2680	Deflector – Discharge	1

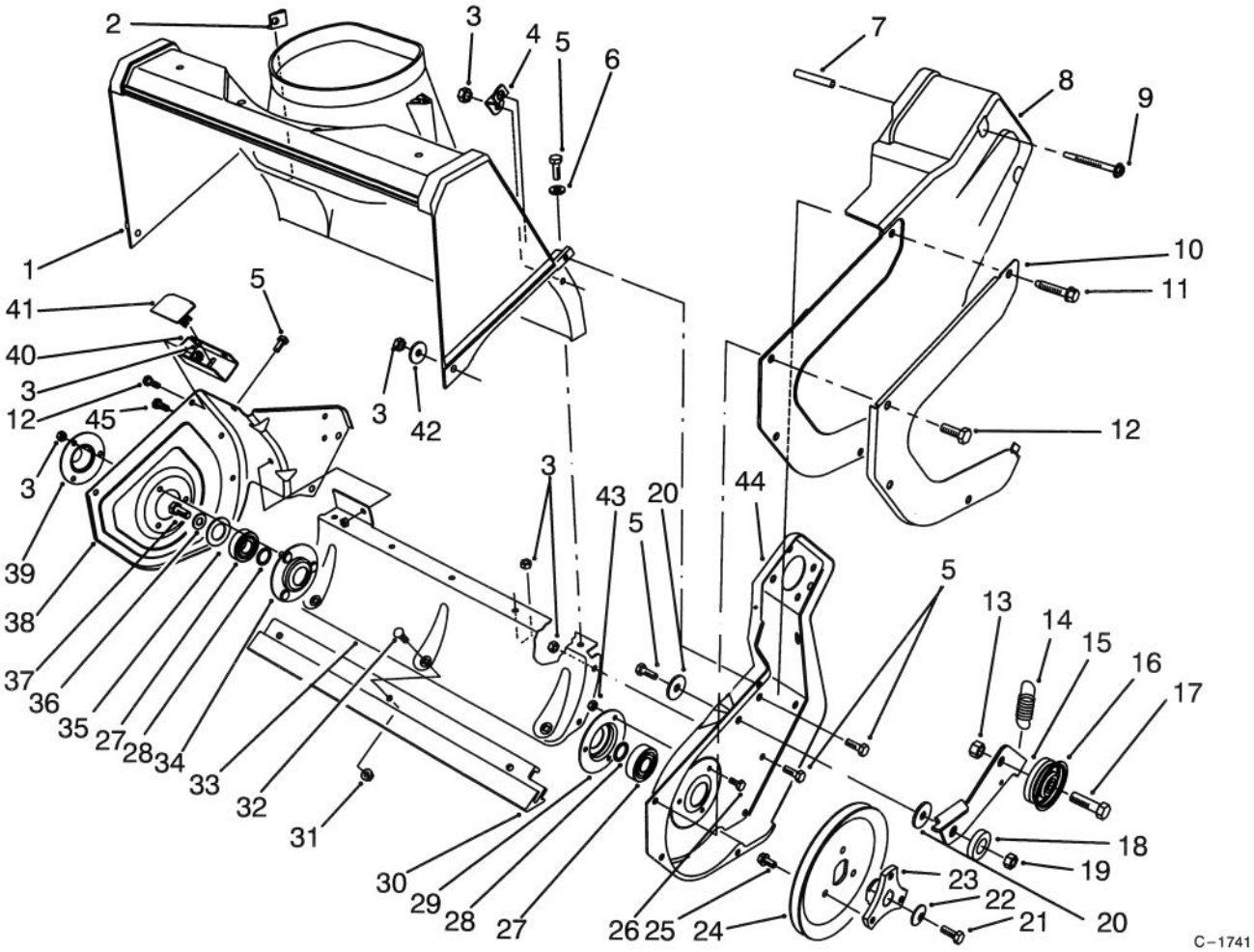

ROTOR HOUSING ASSEMBLY

Ref. No.	Part No.	Description	No. Used
1	55–8700	Housing – Rotor	1
2	32115–14	Nut – U	1
3	3296–42	Nut – Lock	20
4	55–9430	Bracket – Z	1
5	321–4	Screw – Cap Hex. Hd.	11
6	3256–22	Washer – Flat	5
7	57–3830	Tube	2
8	71–5030	Cover – Drive	1
9	71–5350	Screw – Thread Forming	2
10	71–5150	Guard – Drive Cover	1
11	36–3860	Screw – Special	1
12	32105–15	Screw – Hex. Flange Hd.	7
13	3296–39	Nut – Lock	1
14	71–5470	Spring – Brake	1
15	71–5160	Arm – Brake	1
16	71–5260	Pulley – Idler	1
17	323–44	Screw – Cap Hex. Hd.	1
18	80–4620	Washer – Spacer	1
19	3296–56	Nut – Lock	1
20	3256–55	Washer	2
21	321–30	Screw – Cap Hex. Hd.	1
22	3290–456	Washer – Belleville	1
23	71–5070	Hub – Pulley	1

Ref. No.	Part No.	Description	No. Used
24	71–5410	Pulley – Rotor	1
25	12–3270	Screw – Hex. Flange Hd.	3
26	32105–8	Screw – Hex. Hd.	3
27	38–7820	Bearing – Ball	2
28	52–7280	Washer – Thrust	2
29	38–8620	Flange – Bearing	1
30	71–5390	Scraper	1
31	32128–10	Nut – Flange Lock	3
32	3229–11	Bolt – Carriage	3
33	71–4930	Housing – Lower	1
34	52–9110	Flange – Bearing	1
35	52–7270	Washer – Rubber	1
36	3256–24	Washer – Flat	1
37	3234–25	Screw – Cap Hex. Hd.	1
38	71–4920	Sideplate – R.H.	1
39	52–7290	Retainer – Bearing	1
40	71–5310	Bracket – Support	1
41	71–5270	Cover – Bracket	1
42	3256–67	Washer – Flat	2
43	3296–2	Nut – Lock	3
44	71–4911	Sideplate – L.H.	1
45	321–39	Screw – Hex Washer Hd.	1

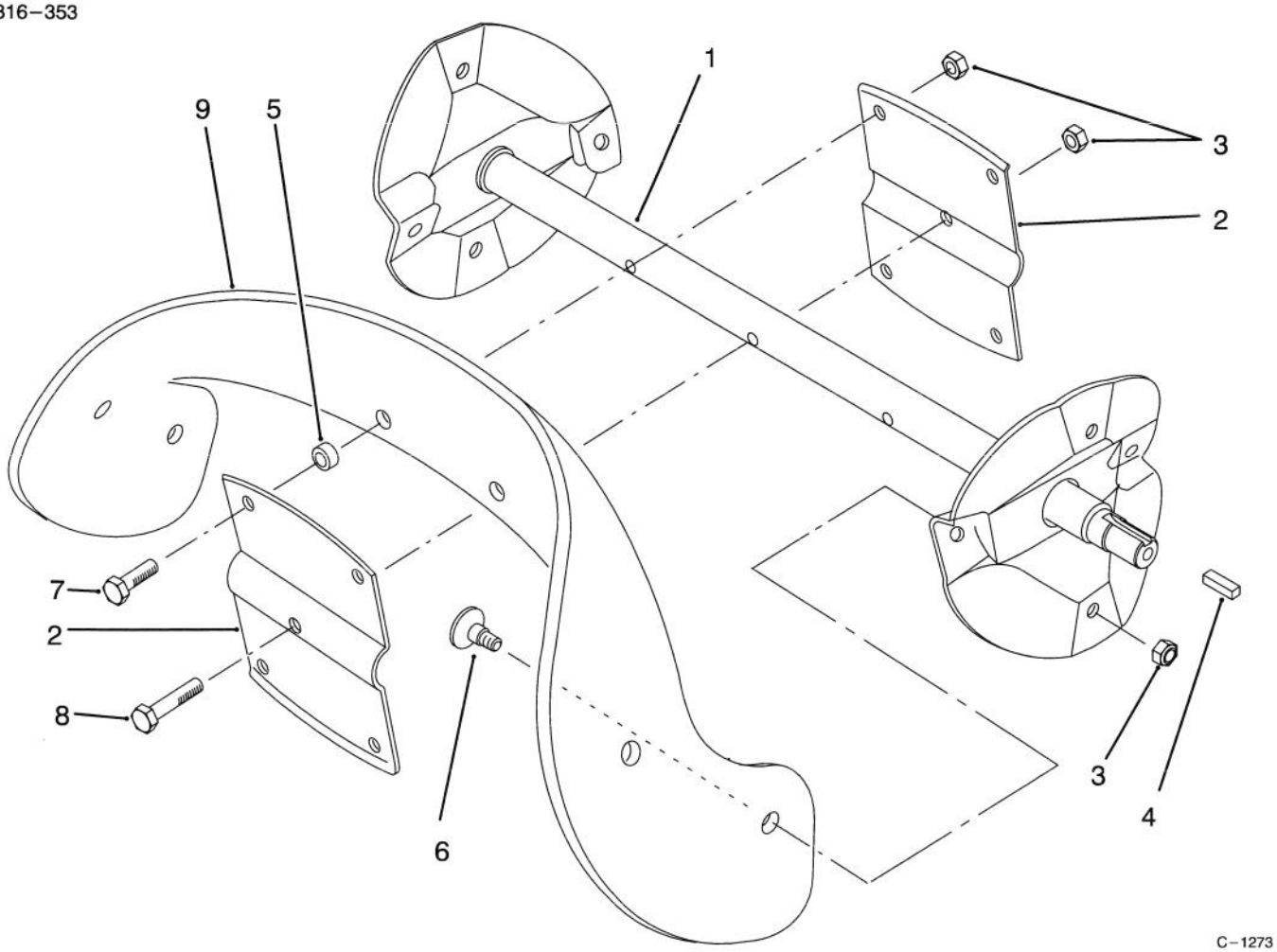

ROTOR ASSEMBLY

Ref. No.	Part No.	Description	No. Used
1	55–9202	Rotor Shaft Assembly	1
2	66–6600	Plate – Rotor	2
3	3296–56	Nut – Lock	13
4	10–8040	Key – Square	1
5	55–9370	Spacer	4

Ref. No.	Part No.	Description	No. Used
6	84–1971	Screw – Countersunk	8
7	321–4	Screw – Cap Hex. Hd.	4
8	321–8	Screw – Cap Hex. Hd.	1
9	88–0781	Blade – Rotor	2

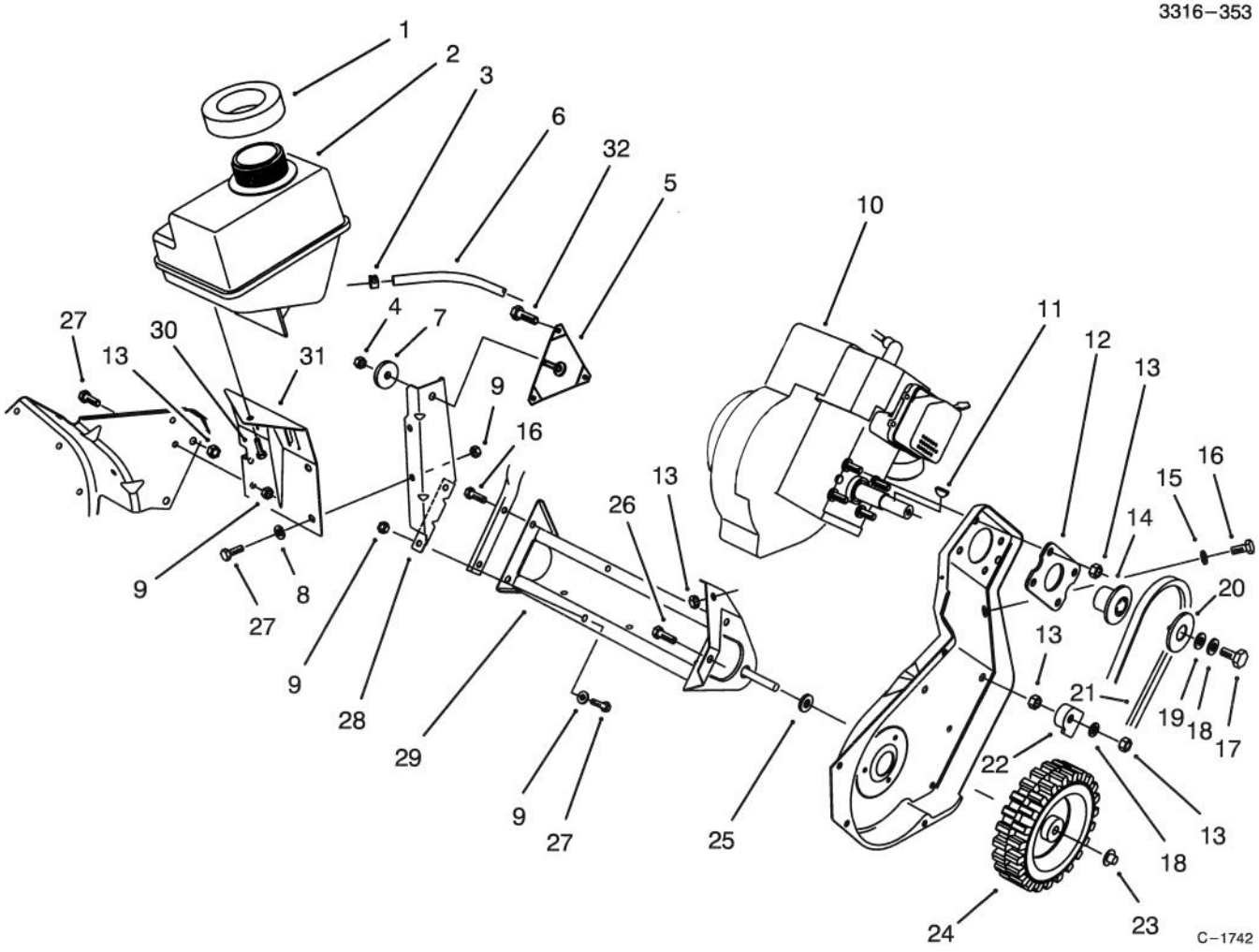

ENGINE & FRAME ASSEMBLY

Ref. No.	Part No.	Description	No. Used
1	55–9310	Seal – Fuel Tank	1
2	71–5020	Tank – Fuel	1
3	2412–86	Clamp – Hose	2
4	3296–16	Nut – Lock	1
5	92–6012	Bracket – & Stud Assembly	1
6	49–2482	Hose – Fuel	1
7	71–5320	Washer – Engine Support	1
8	3256–22	Washer – Flat	4
9	3296–42	Nut – Lock	6
†10		Engine	
		(Model No. 38190 – Tec. No. HSK600–1659S)	1
		(Model No. 38191 – Tec. No. HSK600–1671S)	1
11	3257–3	Key – Woodruff	1
12	71–5290	Plate – Engine	1
13	3296–29	Nut – Lock	9
14	71–5050	Hub – Sheave	1

Ref. No.	Part No.	Description	No. Used
15	3256–23	Washer – Flat	1
16	322–3	Screw – Cap Hex. Hd.	3
17	3235–6	Screw – Locking Hex. Hd.	1
18	3290–456	Washer – Belleville	1
19	3256–71	Washer – Flat	2
20	71–5060	Cap – Sheave	1
21	71–5381	Belt – Drive	1
22	84–5610	Guide – Cable	1
23	3290–320	Nut – Push	2
24	23–3250	Wheel	2
25	71–5440	Spacer – Wheel	2
26	322–5	Screw – Cap Hex. Hd.	1
27	321–4	Screw – Cap Hex. Hd.	6
28	71–5210	Support – Engine	1
29	71–5200	Frame Assembly	1
30	32144–53	Screw – Thread Forming	1
31	71–5220	Bracket – Fuel Tank	1
32	92–6019	Screw – Thr'd Form.	3

†Obtain from your local Tecumseh Dealer.

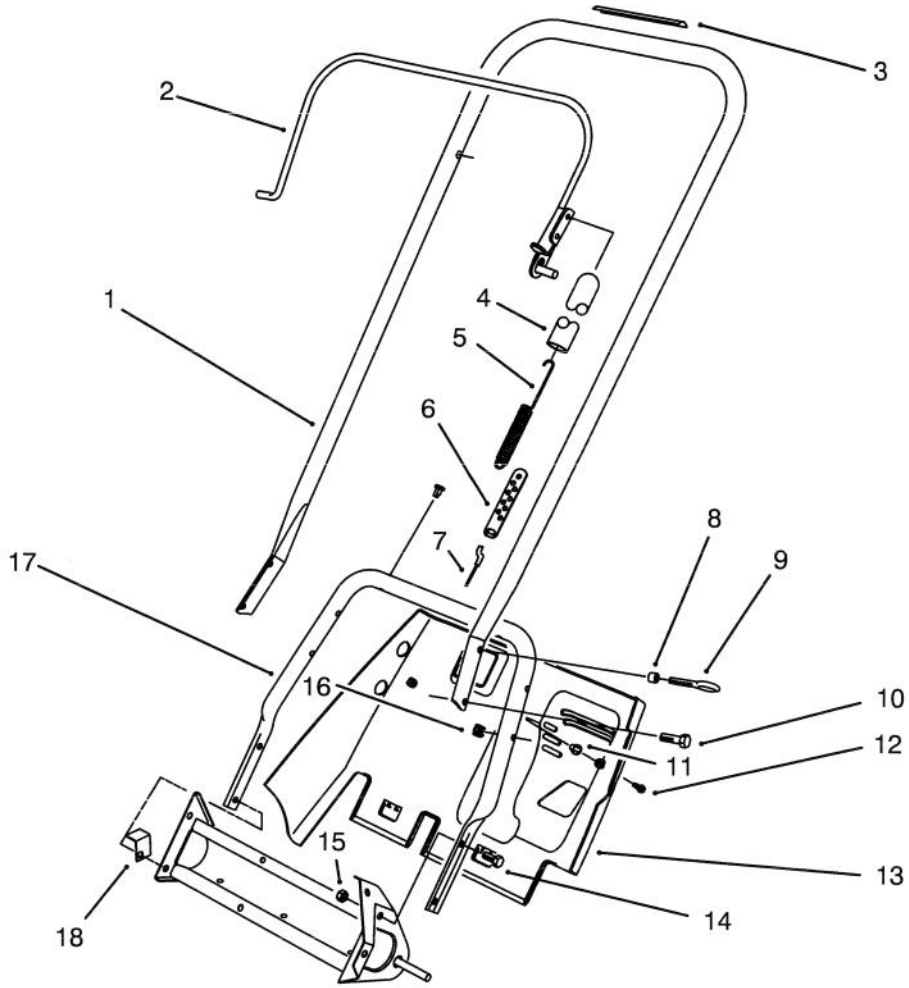

C–1743

HANDLE ASSEMBLY

Ref. No.	Part No.	Description	No. Used
1	71–5090	Handle – Upper	1
2	71–5120	Bail Assembly	1
3	66–6870	Decal – Rotor Drive (Model No. 38190	1
*	60–9470	Decal – Rotor Drive (Model No. 38191)	1
4	71–5530	Cover – Spring	1
5	71–5480	Spring – Extension	1
6	71–5330	Adjuster – Cable	1
7	55–9322	Cable – Clutch	1
8	55–9370	Spacer	1

Ref. No.	Part No.	Description	No. Used
9	3299–1	Bolt – Eye	1
10	32105–11	Screw – Cap Hex. Hd.	3
11	3290–486	Nut – Push	5
12	32144–53	Screw – Thread Forming	3
13	71–5041	Shroud – Lower	1
14	322–3	Screw – Cap Hex. Hd.	2
15	3296–29	Nut – Lock	2
16	3290–225	Nut – Speed	4
17	71–5370	Handle – Lower	1
18	71–5600	Bracket – Shroud	1

*Not Illustrated

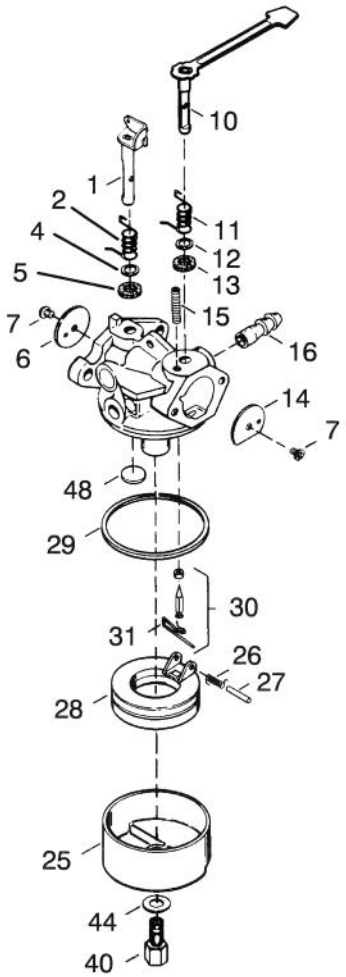

C–1748

CARBURETOR NO. 632641

Ref. No.	Part No.	Description	No. Used
1	632166	Throttle Shaft & Lever Ass'y	1
2	632169	Throttle Return Spring	1
4	6311844	Dust Seat Washer	1
5	631183	Dust Seat (Throttle)	1
6	631621	Throttle Shutter	1
7	650506	Shutter Screw	2
10	632553	Choke shaft & Lever Ass'y	1
14	631815	Choke Shutter	1
15	630735	Choke Positioning Spring	1
16	632164	Fuel Fitting	1
25	631700	Float Bowl	1

Ref. No.	Part No.	Description	No. Used
26	632386	Float Dampening Spring	1
27	631024	Float shaft	1
28	632019	Float	1
29	631028	Float Bowl "O" Ring	1
30	631021	Inlet Needle, Seat & Clip (Incl. Ref. #31)	1
31	631022	Spring Clip	1
40	632385	High Speed Bowl Nut	1
44	631334	Bowl Nut Washer	1
48	631027	Welch Plug	1

*Included in Gasket Set No. 510324B.

ENGINE TECUMSEH MODEL NO. HSK600 TYPE 1659–S
(Model No. 38190 Only)

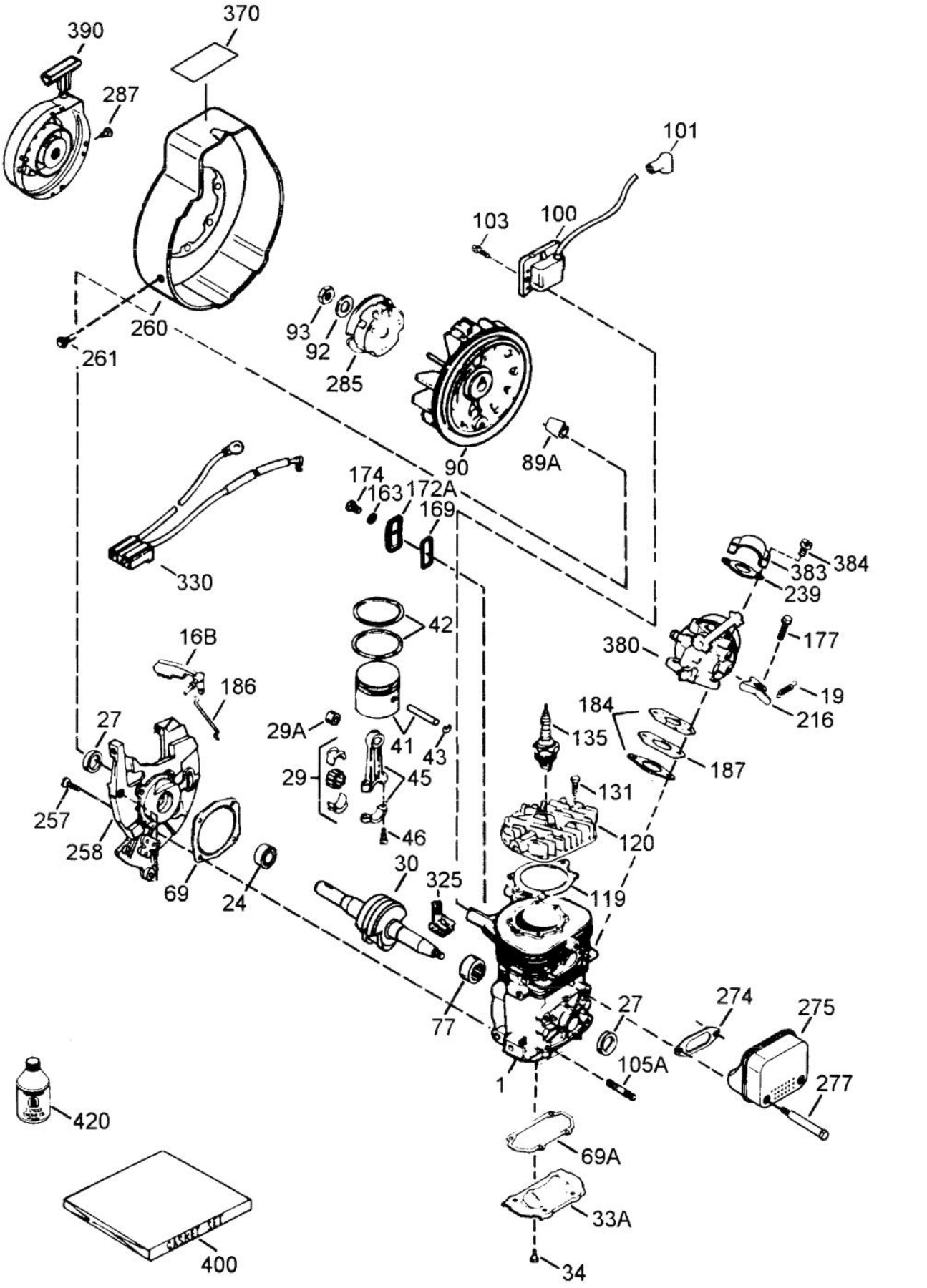

C–1747

ENGINE TECUMSEH MODEL NO. HSK600 TYPE 1659–S (Model No. 38190 Only) (Continued)

Ref. No.	Part No.	Description	No. Used
1		Cylinder (Order Short Block if Replacement is Needed)	1
16B	490291A	Air Vane	1
19	570707	Extension Spring	1
24	530110	Ball Bearing	1
27	510319	Oil Seal	2
29	530150	Needle Bearing & Liner Set (37 Needles)	1
29A	530104A	Cartridge Bearing	1
30	290602	Crankshaft	1
33A	570644	Cover Plate	1
34	650579	Screw, Torx T–25	4
41	310283A	Piston & Pin Assembly	1
42	310190	Ring Set	2
43	310167	Piston Pin Retaining Ring	2
45	310235B	Connecting Rod Ass'y (Incl. Ref. #29, 29A, & 46)	1
46	650633	Connecting Rod Bolt	4
*69	510292A	Cylinder Cover Gasket	1
*69A	510323A	Cover Plate Gasket	1
77	530105	Cartridge Bearing	1
89A	611032	Adapter Sleeve	1
90	611112	Flywheel	1
92	650815	Belleville Washer	1
93	650390	Flywheel Nut	1
100	34443A	Solid State Ignition (Incl. Ref. #101)	1
101	610118	Spark Plug Cover	1
103	650814	Screw, Torx T–15	2
105A	650796	Stud	4
*119	510274A	Cylinder Head Gasket	1
120	250240B	Cylinder Head	1
131	650477	Screw, Torx T–30	5
135	611049	Resistor Spark Plug	1
163	650838	Washer	1
*169	510325A	Cover Plate Gasket	1
172A	570708	Compression Release Cover	1
174	650579	Screw, Torx T–25	1
177	650959	Screw	2
*184	510326A	Carburetor Gasket	2
186	490322	Governor Link	1
187	570438A	Spacer	1
216	570645	R.P.M. Adjusting Lever	1
239	35815	Air Cleaner Gasket	1
257	650911	Screw, Torx T–30	4
258	350396	Blower Housing Base (Incl. Ref. #27)	1
260	350445	Blower Housing	1
261	650737	Screw	4
*274	510346A	Exhaust Gasket	1
275	390330	Muffler (Incl. Ref. #274 & 277)	1
277	650869	Screw	2
285	590551	Starter Cup	1
287	650926	Screw	3
325	29443	Wire Clip	1
330	611153	Wire Harness	1
370	35977	Instruction Decal	1
380	632641	Carburetor (Incl. Ref. #184)	1
383	570434	Spit Cup	1
384	650229	Screw, Torx T–25	2
390	590625	Rewind Starter	1
400	510324B	Gasket Set	1
420	730227A	2–Cycle Oil (8 oz.)	1

*Included in Gasket Set No. 510324B.

ENGINE TECUMSEH MODEL NO. HSK600 TYPE 1671–S
(Model No. 38191 Only)

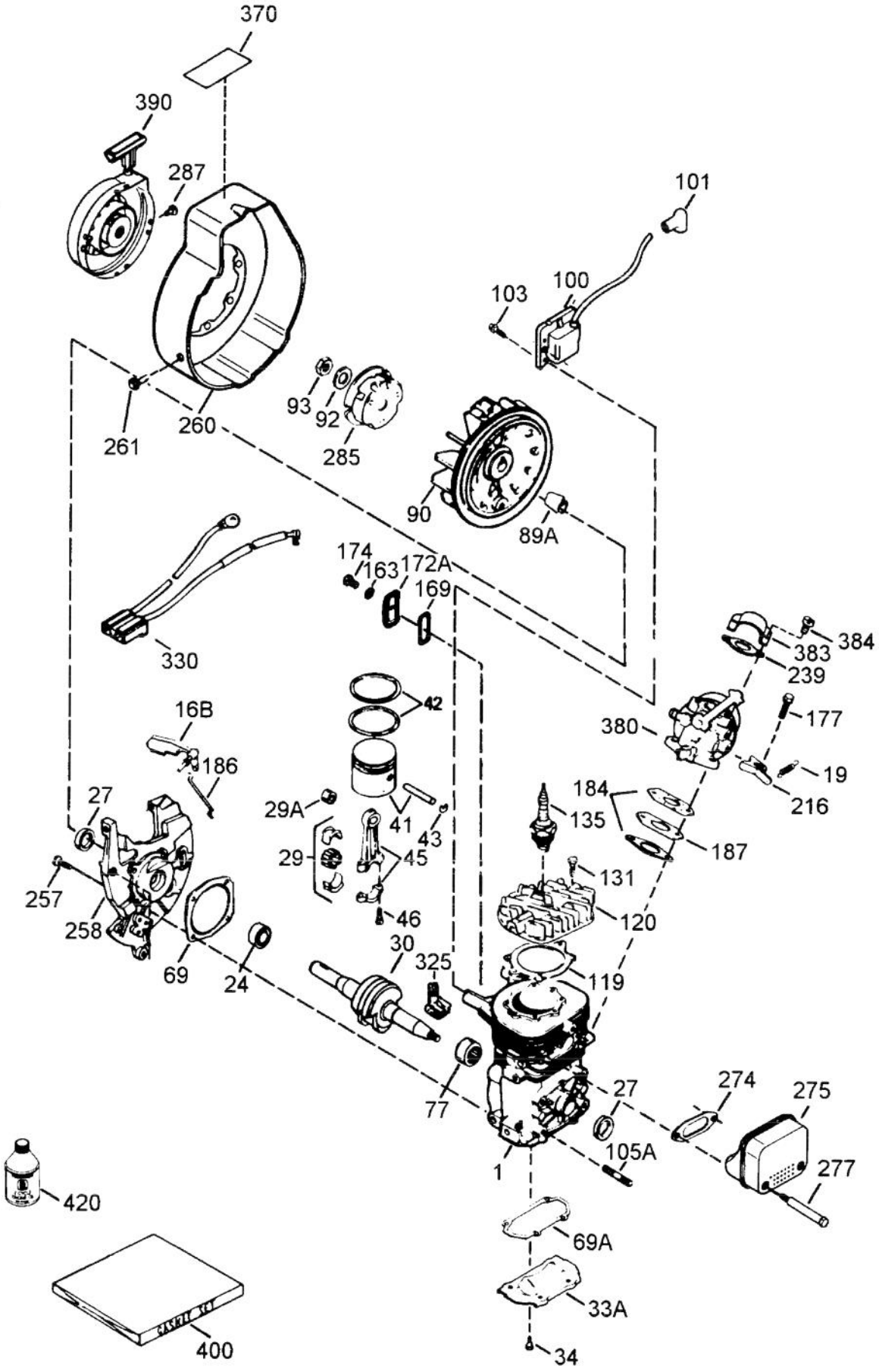

C–1749

ENGINE TECUMSEH MODEL NO. HSK600 TYPE 1671–S
(Model No. 38191 Only)

Ref. No.	Part No.	Description	No. Used
1		Cylinder (Order Short Block if Replacement is Needed)	1
16B	490291A	Air Vane	1
19	570707	Extension Spring	1
24	530110	Ball Bearing	1
27	510319	Oil Seal	2
29	530150	Needle Bearing & Liner Set (37 Needles)	1
29A	530104A	Cartridge Bearing	1
30	290602	Crankshaft	1
33A	570644	Cover Plate	1
34	650579	Screw, Torx T–25	4
41	310283A	Piston & Pin Assembly	1
42	310190	Ring Set	2
43	310167	Piston Pin Retaining Ring	2
45	310235B	Connecting Rod Ass'y (Incl. Ref. #29, 29A, & 46)	1
46	650633	Connecting Rod Bolt	4
*69	510292A	Cylinder Cover Gasket	1
*69A	510323A	Cover Plate Gasket	1
77	530105	Cartridge Bearing	1
89A	611032	Adapter Sleeve	1
90	611112	Flywheel	1
92	650815	Belleville Washer	1
93	650390	Flywheel Nut	1
100	34443A	Solid State Ignition (Incl. Ref. #101)	1
101	610118	Spark Plug Cover	1
103	650814	Screw, Torx T–15	2
105A	650796	Stud	4
*119	510274A	Cylinder Head Gasket	1
120	250240B	Cylinder Head	1
131	650477	Screw, Torx T–30	5
135	611049	Resistor Spark Plug	1
163	650838	Washer	1
*169	510325A	Cover Plate Gasket	1
172A	570708	Compression Release Cover	1
174	650579	Screw, Torx T–25	1
177	650959	Screw	2
*184	510326A	Carburetor Gasket	2
186	490322	Governor Link	1
187	570438A	Spacer	1
216	570645	R.P.M. Adjusting Lever	1
239	35815	Air Cleaner Gasket	1
257	650911	Screw, Torx T–30	4
258	350396	Blower Housing Base (Incl. Ref. #27)	1
260	350445	Blower Housing	1
261	650737	Screw	4
*274	510346A	Exhaust Gasket	1
275	390330	Muffler (Incl. Ref. #274 & 277)	1
277	650869	Screw	2
285	590551	Starter Cup	1
287	650926	Screw	3
325	29443	Wire Clip	1
330	611153	Wire Harness	1
370	35977	Instruction Decal	1
380	632641	Carburetor (Incl. Ref. #184)	1
383	570434	Spit Cup	1
384	650229	Screw, Torx T–25	2
390	590625	Rewind Starter	1
400	510324B	Gasket Set	1
420	730227A	2–Cycle Oil (8 oz.)	1

*Included in Gasket Set No. 510324B.

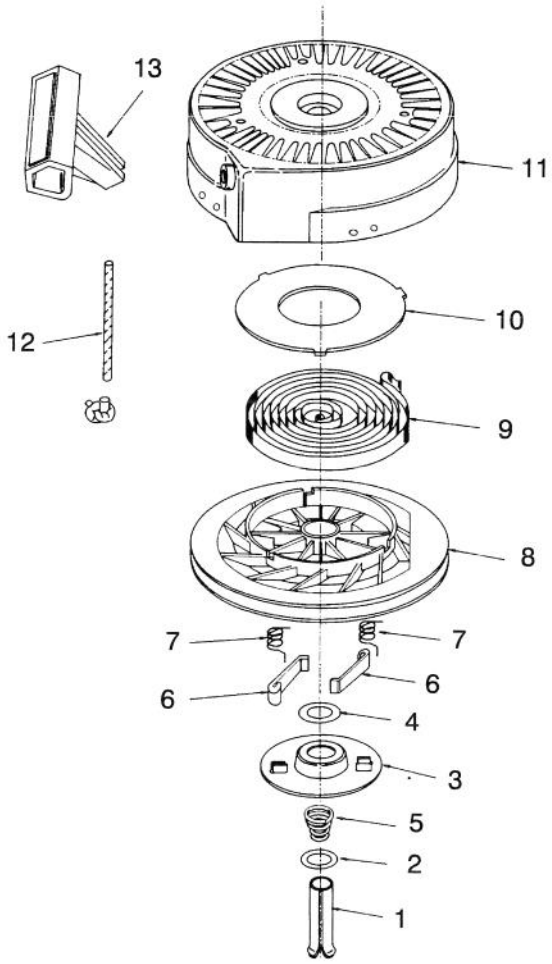

C–1750

RECOIL STARTER NO. 590652

Ref. No.	Part No.	Description	No. Used
1	590599A	Spring Pin (Incl. Ref. #4)	1
2	590600	Washer	1
3	590615	Retainer	1
4	590601	Washer	1
5	590598	Brake Spring	1
6	590616	Starter Dog	2
7	590617	Dog Spring	2

Ref. No.	Part No.	Description	No. Used
8	590645A	Pulley Assembly (Incl. Ref. #9 & 10)	1
9	590619	Rewind Spring	1
10	590620	Spring Cover	1
11	590643	Starter Housing Assembly	1
12	590535	Starter Rope	1
13	590452	Starter Handle	1

TORO PART NUMBER INDEX

Part No.	Description	Pg. No.	Ref. No.	Qty.
10–8040	Key – Square	4	4	1
12–3270	Screw – Hex. Flange Hd.	3	25	3
20–4320	Washer – Rubber	1	5	2
23–3250	Wheel	5	24	2
23–7470	Guide – Rope	1	14	1
36–3860	Screw – Special	3	11	1
38–7820	Bearing – Ball	3	27	2
38–8620	Flange – Bearing	3	29	1
40–5940	Switch – On–Off	1	8	1
44–2750	Body – Primer	1	13	1
44–3173	Hose – Primer	1	15	1
46–8092	Screw – Hex. Flange Hd.	2	29	2
49–2482	Hose – Fuel	5	6	1
52–7270	Washer – Rubber	3	35	1
52–7280	Washer – Thrust	3	28	2
52–7290	Retainer – Bearing	3	39	1
52–9110	Flange – Bearing	3	34	1
53–7660	Decal – Danger	1	*	1
55–3573	Gas Cap Assembly	1	4	1
55–8700	Housing – Rotor	3	1	1
55–8921	Support – Chute Ring	2	33	1
55–8950	Plate – Friction	1	6	2
55–9202	Rotor Shaft Assembly	4	1	1
55–9310	Seal – Fuel Tank	5	1	1
55–9322	Cable – Clutch	6	7	1
55–9370	Spacer	4	5	4
55–9370	Spacer	6	8	1
55–9370	Spacer – Detent Arm	1	25	1
55–9430	Bracket – Z	3	4	1
56–2680	Deflector – Discharge	2	44	1
57–3830	Tube	3	7	2
60–8690	Chute	1	2	1
60–9470	Decal – Rotor Drive	6	*	1
63–3740	Decal – Danger	1	3	1
63–8360	Key – Ignition	1	10	1
66–6600	Plate – Rotor	4	2	2
66–6870	Decal – Rotor Drive	6	3	1
66–7460	Bulb – Primer	1	12	1
71–4911	Sideplate – L.H.	3	44	1
71–4920	Sideplate – R.H.	3	38	1
71–4930	Housing – Lower	3	33	1
71–4940	Handle – Chute	1	7	1
71–4950	Ring – Chute	2	34	1
71–4980	Retainer – Chute Ring L.H.	2	28	1
71–4990	Retainer – Chute Ring R.H.	2	35	1
71–5020	Tank – Fuel	5	2	1
71–5030	Cover – Drive	3	8	1
71–5041	Shroud – Lower	6	13	1
71–5050	Hub – Sheave	5	14	1
71–5060	Cap – Sheave	5	20	1
71–5070	Hub – Pulley	3	23	1
71–5090	Handle – Upper	6	1	1
71–5120	Bail Assembly	6	2	1
71–5150	Guard – Drive Cover	3	10	1
71–5160	Arm – Brake	3	15	1
71–5200	Frame Assembly	5	29	1
71–5210	Support – Engine	5	28	1
71–5220	Bracket – Fuel Tank	5	31	1
71–5240	Panel – Control	1	9	1
71–5260	Pulley – Idler	3	16	1
71–5270	Cover – Bracket	3	41	1
71–5290	Plate – Engine	5	12	1
71–5310	Bracket – Support	3	40	1
71–5320	Washer – Engine Support	5	7	1
71–5330	Adjuster – Cable	6	6	1
71–5340	Guard – Muffler	1	19	1
71–5350	Screw – Thread Forming	3	9	2
71–5370	Handle – Lower	6	17	1
71–5381	Belt – Drive	5	21	1
71–5390	Scraper	3	30	1
71–5410	Pulley – Rotor	3	24	1
71–5440	Spacer – Wheel	5	25	2
71–5470	Spring – Brake	3	14	1
71–5480	Spring – Extension	6	5	1
71–5490	Decal – Shroud	1	16	1
71–5530	Cover – Spring	6	4	1
71–5590	Spring – Extension	1	22	1
71–5600	Bracket – Shroud	6	18	1
80–4610	Arm – Detent	1	26	1
80–4620	Washer – Spacer	3	18	1
80–4810	Shroud – Upper	2	37	1
84–1971	Screw – Countersunk	4	6	8
84–5610	Guide – Cable	5	22	1
88–0781	Blade – Rotor	4	9	2
88–1020	Decal – Control Panel	1	27	1
88–1040	Decal – Control Panel	1	*	1
92–6012	Bracket – & Stud Assembly	5	5	1
92–6019	Screw – Thr'd Form.	5	32	3
2412–86	Clamp – Hose	5	3	2
321–4	Screw – Cap Hex. Hd.	3	5	11
321–4	Screw – Cap Hex. Hd.	4	7	4
321–4	Screw – Cap Hex. Hd.	1	23	4
321–4	Screw – Cap Hex. Hd.	5	27	6
321–8	Screw – Cap Hex. Hd.	4	8	1
321–30	Screw – Cap Hex. Hd.	3	21	1
321–39	Screw – Hex Washer Hd.	3	45	1
322–3	Screw – Cap Hex. Hd.	6	14	2
322–3	Screw – Cap Hex. Hd.	5	16	3
322–5	Screw – Cap Hex. Hd.	5	26	1
323–44	Screw – Cap Hex. Hd.	3	17	1
3229–11	Bolt – Carriage	3	32	3
3230–16	Bolt – Carriage	2	36	3
3230–22	Bolt – Carriage	1	1	2
3234–25	Screw – Cap Hex. Hd.	3	37	1
3235–6	Screw – Locking Hex. Hd.	5	17	1
3250–32	Screw – Pan Hd.	2	38	2
3256–22	Washer – Flat	3	6	5
3256–22	Washer – Flat	5	8	4
3256–22	Washer – Flat	1	24	5
3256–22	Washer – Flat	2	32	2
3256–23	Washer – Flat	5	15	1
3256–24	Washer – Flat	3	36	1

*Not Illustrated

TORO PART NUMBER INDEX (Cont.)

Part No.	Description	Pg. No.	Ref. No.	Qty.
3256–55	Washer	3	20	2
3256–61	Washer – Flat	1	21	4
3256–67	Washer – Flat	3	42	2
3256–68	Washer – Flat	2	43	2
3256–70	Washer – Flat	2	39	3
3256–71	Washer – Flat	5	19	2
3257–3	Key – Woodruff	5	11	1
3290–225	Nut – Speed	6	16	4
3290–320	Nut – Push	5	23	2
3290–359	Screw – Cap Hex. Hd.	1	18	4
3290–456	Washer – Belleville	5	18	1
3290–456	Washer – Belleville	3	22	1
3290–456	Washer – Belleville	2	42	2
3290–486	Nut – Push	6	11	5
3296–2	Nut – Lock	1	20	4
3296–2	Nut – Lock	3	43	3
3296–16	Nut – Lock	5	4	1
3296–29	Nut – Lock	5	13	9
3296–29	Nut – Lock	6	15	2
3296–29	Nut – Lock	2	41	2
3296–39	Nut – Lock	3	13	1
3296–42	Nut – Lock	3	3	20
3296–42	Nut – Lock	5	9	6
3296–42	Nut –Lock	2	31	4
3296–56	Nut – Lock	4	3	13
3296–56	Nut – Lock	3	19	1
3296–56	Nut – Lock	2	30	1
3299–1	Bolt – Eye	6	9	1
32105–8	Screw – Hex. Hd.	3	26	3
32105–11	Screw – Cap Hex. Hd.	6	10	3
32105–15	Screw – Hex. Flange Hd.	3	12	7
32115–14	Nut – U	3	2	1
32128–10	Nut – Flange Lock	3	31	3
32144–53	Screw – Slotted Flange Hd.	1	11	2
32144–53	Screw – Thread Forming	6	12	3
32144–53	Screw – Thread Forming	5	30	1
32149–1	Nut – Keps	2	40	3

OPTIONAL EQUIPMENT

Snow Cab Kit . . . . . Part No. 88–0600

*Not Illustrated

PRODUCT CHANGES

In an effort to make improvements available to TORO owners as quickly as possible, minor changes are incorporated into Toro's products from time to time that do not become immediately shown in the Parts Catalog. If such a change has been made in your unit, which is not reflected in your manual, see your TORO Distributor or his Authorized TORO Service Dealer for information and part numbers.

COUNTRIES OTHER THAN THE UNITED STATES OR CANADA

Customers who have purchased TORO products exported from the United States or Canada should contact their Toro Distributor (Dealer) to obtain guarantee policies for your country, province or state. If for any reason you are dissatisfied with your Distributor's service or have difficulty obtaining guarantee information, contact the TORO importer. If all other remedies fail, you may contact us at The Toro Company.

MAINTENANCE RECORD

Date								

Compliance with Radio Interference Regulations Certified.
Certifie Conforme au Reglement sur le Brouillage Radioelectrique.

MAINTENANCE RECORD

Date								