FORM NO. 3316–355

TORO®

MODEL NO. 38025–4900001 & UP

PARTS CATALOG

1800 POWER CURVE SNOWTHROWER

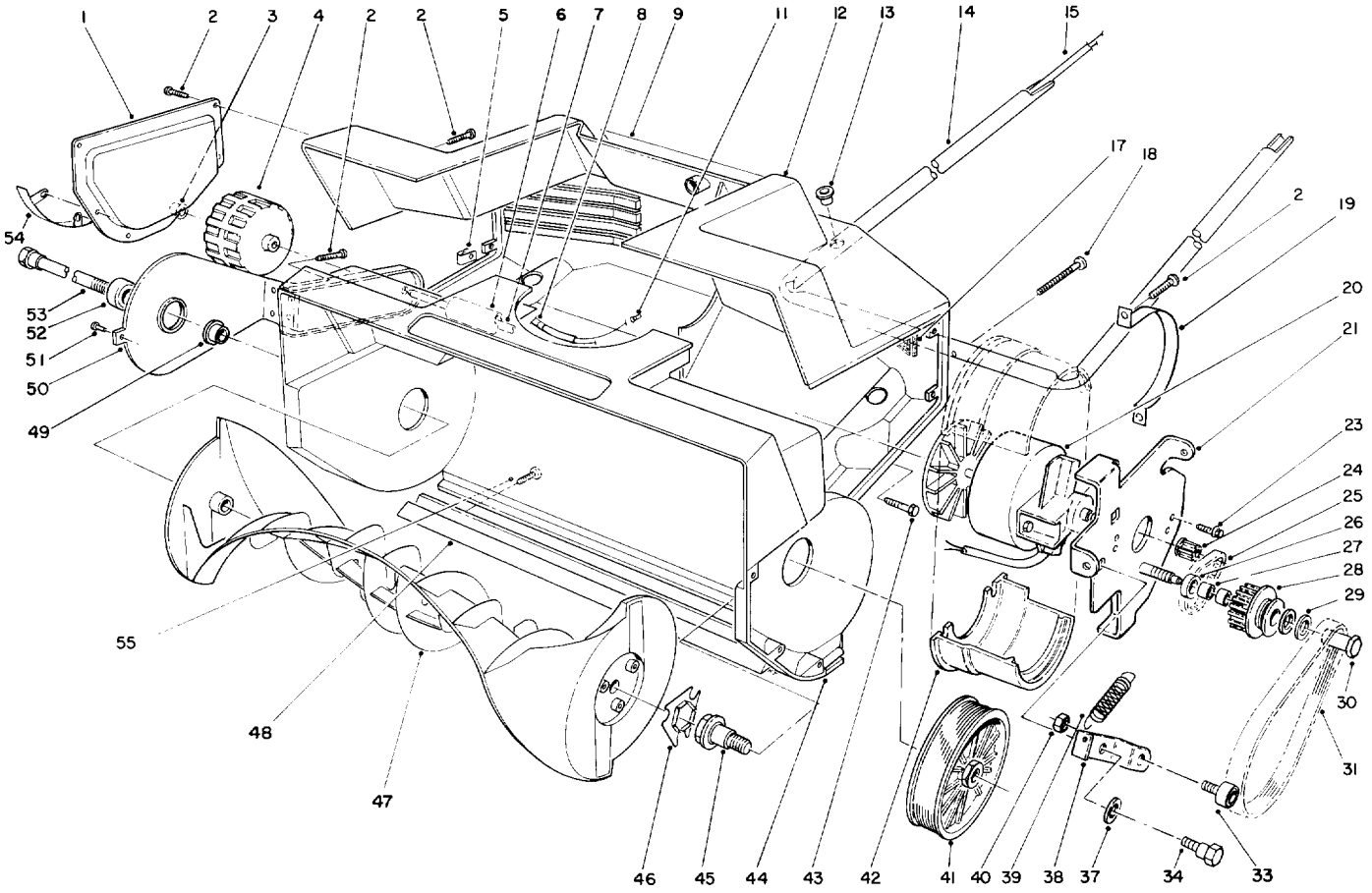

C–0455

HOUSING & ROTOR ASSEMBLY

Ref. No.	Part No.	Description	No. Used
1	73–0220	Plate – Side	2
2	32104–121	Screw – Pan Hd.	23
3	32112–1	Push Nut	2
4	73–5720	Wheel	2
5	249–42	U–Clip – Tinnerman	4
6	73–0250	Sleeve – Axle	1
7	73–0370	Shaft – Axle	1
8	64–5820	Relief – Strain	1
9	73–0450	Decal – Danger	1
11	218–511	Connector	2
12	73–0302	Shroud – Housing	1
13	256–307	Bushing	1
14	73–0280	Tube – Lower Handle	1
15	73–3630	Wire Harness	1
17	73–1800	Filter – Foam	1
18	32144–88	Screw – Pan Hd.	4
19	73–0120	Strap – Motor	1

Ref. No.	Part No.	Description	No. Used
20	73–3520	Motor	1
21	73–8680	Motor Plate Assembly	1
23	32144–100	Screw – Hex. Washer Hd.	2
24	73–3660	Pulley – Driver	1
25	73–0160	Belt – Timing	1
26	73–3580	Washer	1
27	252–102	Bearing – Needle	2
28	73–3810	Pulley Assembly – Idler (Incl. Ref. #27)	1
29	73–0041	Washer – Thrust	2
30	73–3530	Bolt – Idler	1
31	61–8801	Belt – Drive	1
33	73–5730	Bearing Assembly (Incl. Ref. #40)	1
34	27–0411	Screw – Shoulder	1
37	25–5641	Washer	1
38	73–3600	Bracket – Idler	1

TPS

© The TORO Company –1993
All Rights Reserved

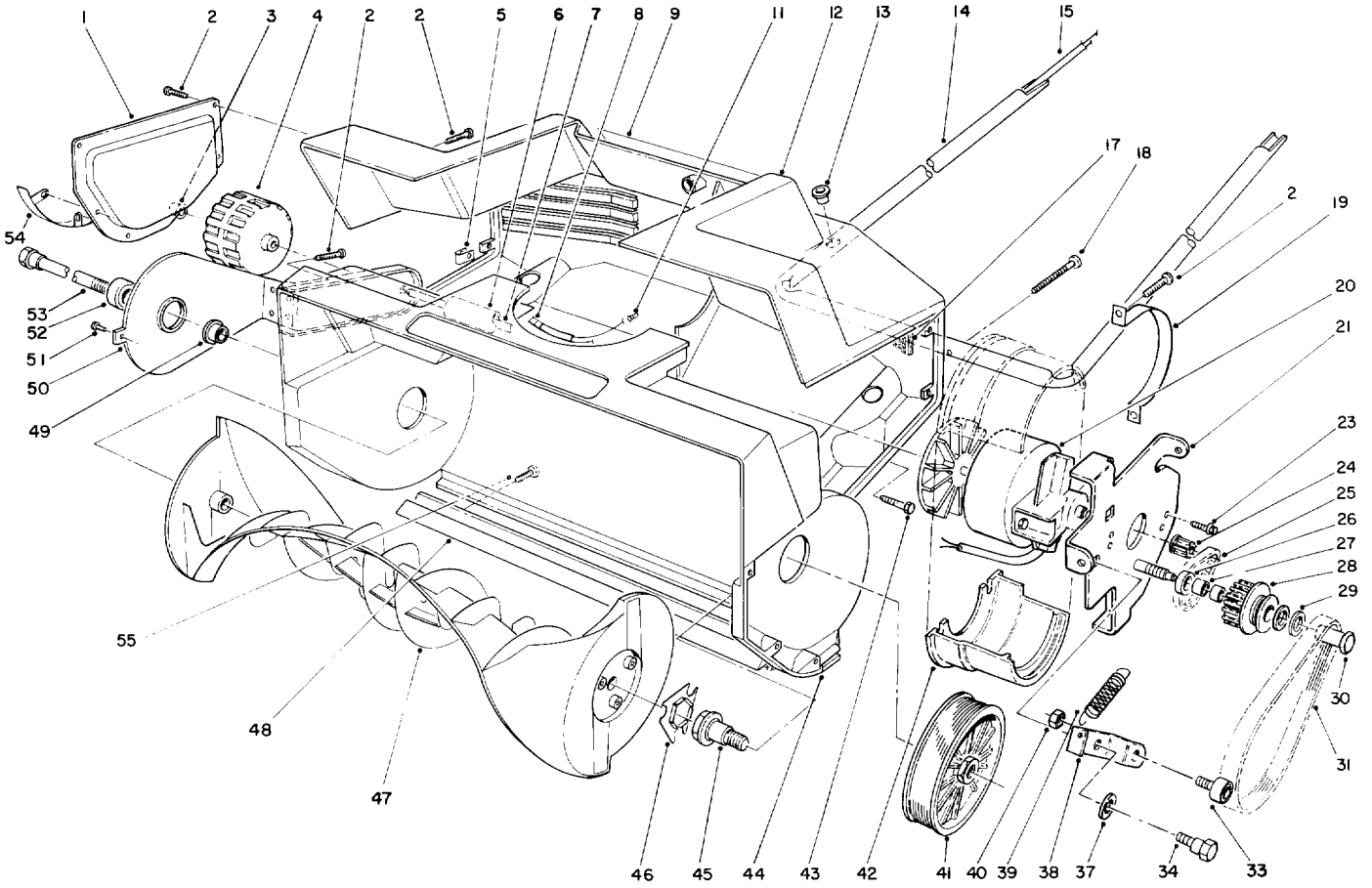

C–0455

HOUSING & ROTOR ASSEMBLY (CONTINUED)

Ref. No.	Part No.	Description	No. Used
39	73–3680	Spring	1
40	3296–47	Nut – Lock	1
41	73–3550	Pulley – Driven	1
42	73–3650	Clamp – Motor Bracket	2
43	32104–97	Screw – Hex. Hd.	2
44	73–3640	Housing – Rotor	1
45	73–0990	Shaft – Rotor Driver	1
46	73–0860	Coupler – Rotor	1
47	73–8590	Rotor	1

Ref. No.	Part No.	Description	No. Used
48	73–3690	Scraper	1
49	73–8580	Bushing	1
50	73–1900	Bracket – Wheel (Incl. Ref.#52)	2
51	3290–271	Rivet – Pop	2
52	61–8780	Bearing – Ball	2
53	73–0020	Shaft – Rotor	1
54	73–1570	Skid – Housing	2
55	32144–108	Screw – Pan Hd.	2

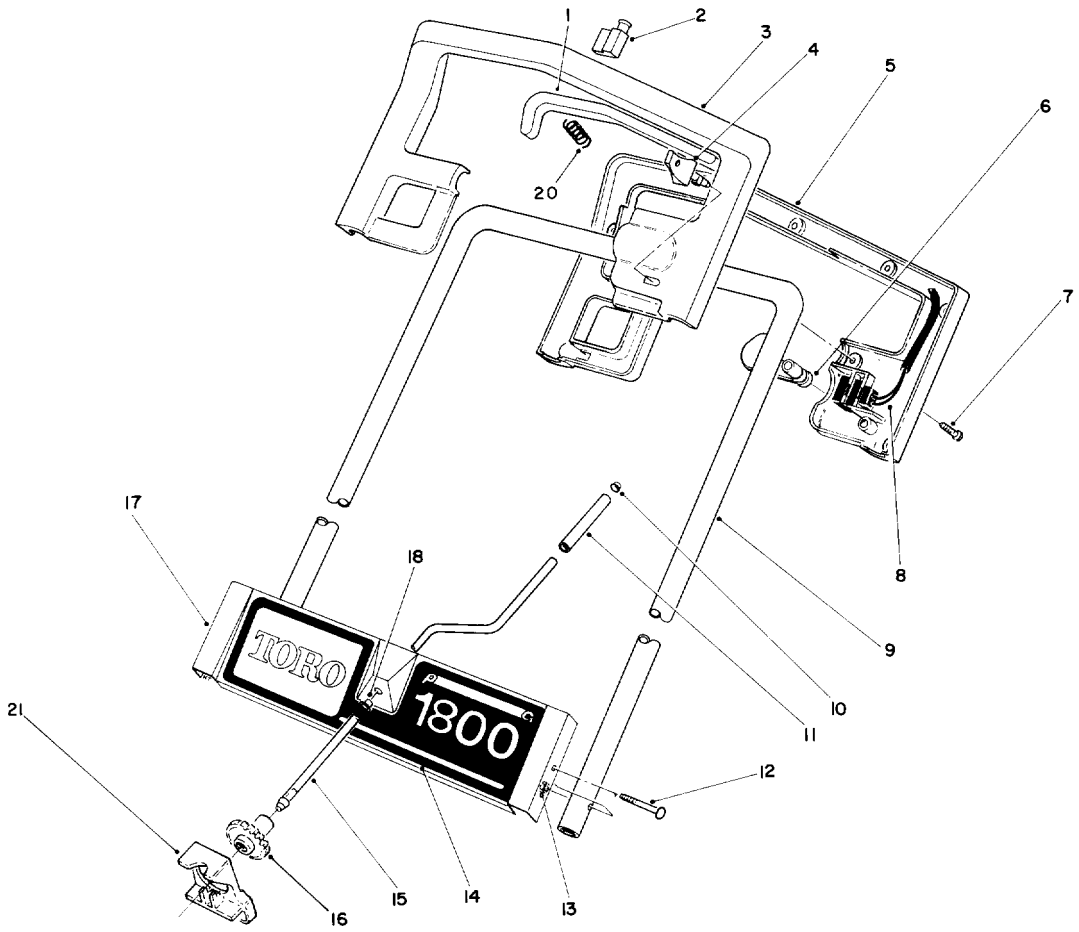

C–0456

HANDLE ASSEMBLY

Ref. No.	Part No.	Description	No. Used
1	73–3510	Bar – Switch	1
2	64–4930	Switch	1
3	73–5700	Handle – Upper Control	1
4	73–5190	Key	1
5	73–5710	Handle – Lower Control	1
6	73–5690	Tab – Lock	1
7	32104–121	Screw – Pan Hd. Form.	11
8	73–5640	Cord – Supply	1
9	73–3460	Tube – Upper Handle	10
10	32112–1	Push Nut	1

Ref. No.	Part No.	Description	No. Used
11	73–0251	Sleeve – Chute Crank	1
12	33–8951	Screw – Hex. Hd. Mach.	2
13	3296–12	Nut – Lock	2
14	73–0490	Decal – Escutcheon	1
15	73–0240	Rod – Chute Crank	1
16	73–0230	Gear – Chute Crank	1
17	73–0310	Plate – Escutcheon	1
18	256–306	Bushing – Snap In	1
20	73–3450	Spring	2
21	73–3710	Brake – Gear	1

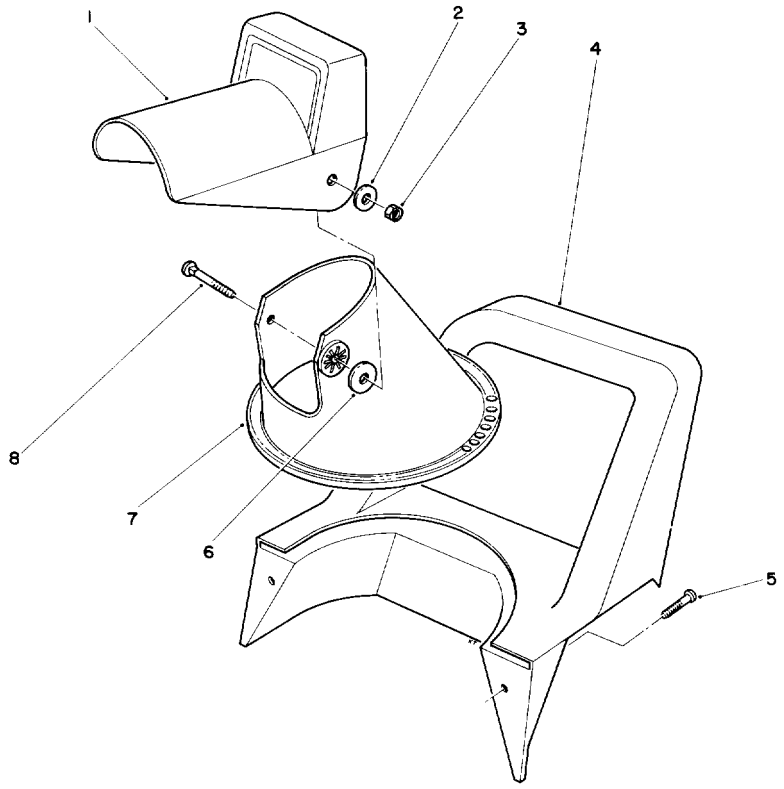

C–0457

CHUTE ASSEMBLY

Ref. No.	Part No.	Description	No. Used
1	73–0190	Chute – Deflector	1
2	3256–68	Washer – Flat	2
3	3296–29	Nut – Lock	2
4	73–0260	Handle – Middle	1
5	32104–121	Screw – Pan Hd. Form.	4
6	20–4320	Washer – Rubber	2
7	73–0180	Chute – Lower	1

Ref. No.	Part No.	Description	No. Used
8	3230–2	Bolt – Carriage	2
*	73–0520	Loose Parts (Incl. Ref.#2, 3, 6, & 8, Page 4) (Incl. Ref. #12, & 13 Page 3)	1

*Not Illustrated

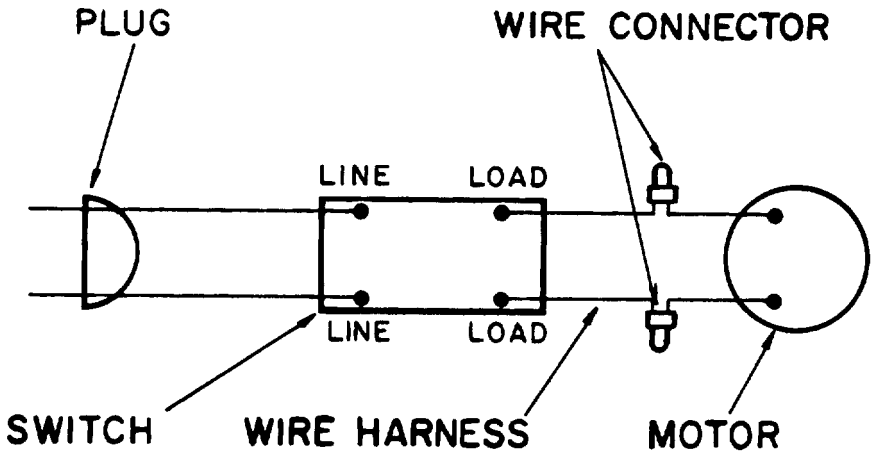

C–1721

ELECTRICAL ASSEMBLY

Ref. No.	Part No.	Description	No. Used

Ref. No.	Part No.	Description	No. Used

TORO PART NUMBER INDEX

Part No.	Description	Pg. No.	Ref. No.	Qty.
20-4320	Washer - Rubber	4	6	2
25-5641	Washer	1	37	1
27-0411	Screw - Shoulder	1	34	1
33-8951	Screw - Hex. Hd. Mach.	3	12	2
61-8801	Beltt - Drive	2	31	1
61-8780	Bearing - Ball	2	52	2
64-4930	Switch	3	2	1
64-5820	Relief - Strain	1	8	1
73-0020	Shaft - Rotor	2	53	1
73-0041	Washer - Thrust	1	29	2
73-0120	Strap - Motor	1	19	1
73-0160	Belt - Timing	1	25	1
73-0180	Chute - Lower	4	7	1
73-0190	Chute - Deflector	4	1	1
73-0220	Plate - Side	1	1	2
73-0230	Gear - Chute Crank	3	16	1
73-0240	Rod - Chute Crank	3	15	1
73-0250	Sleeve - Axle	1	6	1
73-0251	Sleeve - Chute Crank	3	11	1
73-0260	Handle - Middle	4	4	1
73-0280	Tube - Lower Handle	1	14	1
73-0302	Shroud - Housing	1	12	1
73-0310	Plate - Escutcheon	3	17	1
73-0370	Shaft - Axle	1	7	1
73-0450	Decal - Danger	1	9	1
73-0490	Decal - Escutcheon	3	14	1
73-0520	Loose Parts	4	*	1
73-0860	Coupler - Rotor	2	46	1
73-0990	Shaft - Rotor Driver	2	45	1
73-1570	Skid - Housing	2	54	2
73-1800	Filter - Foam	1	17	1
73-1900	Bracket - Wheel	2	50	2
73-3450	Spring	3	20	2
73-3460	Tube - Upper Handle	3	9	10
73-3510	Bar - Switch	3	1	1
73-3520	Motor	1	20	1
73-3530	Bolt - Idler	1	30	1
73-3550	Pulley - Driven	2	41	1
73-3580	Washer	1	26	1
73-3600	Bracket - Idler	1	38	1
73-3630	Wire Harness	1	15	1
73-3640	Housing - Rotor	2	44	1
73-3650	Clamp - Motor Bracket	2	42	2
73-3660	Pulley - Driver	1	24	1
73-3680	Spring	2	39	1
73-3690	Scraper	2	48	1
73-3710	Brake - Gear	3	21	1
73-3810	Pulley Assembly - Idler	1	28	1
73-5190	Key	3	4	1
73-5640	Cord - Supply	3	8	1
73-5690	Tab - Lock	3	6	1
73-5700	Handle - Upper Control	3	3	1
73-5710	Handle - Lower Control	3	5	1
73-5720	Wheel	1	4	2
73-5730	Bearing Assembly	1	33	1
73-8580	Bushing	2	49	1
73-8590	Rotor	2	47	1
73-8680	Motor Plate Assembly	1	21	1
218-511	Connector	1	11	2
249-42	U-Clip - Tinnerman	1	5	4
252-102	Bearing - Needle	1	27	2
256-306	Bushing - Snap In	3	18	1
256-307	Bushing	1	13	1
3230-2	Bolt - Carriage	4	8	2
3256-68	Washer - Flat	4	2	2
3290-271	Rivet - Pop	2	51	2
3296-12	Nut - Lock	3	13	2
3296-29	Nut - Lock	4	3	2
3296-47	Nut - Lock	2	40	1
32104-97	Screw - Hex. Hd.	2	43	2
32104-121	Screw - Pan Hd.	1	2	23
32104-121	Screw - Pan Hd. Form.	4	5	4
32104-121	Screw - Pan Hd. Form.	3	7	11
32112-1	Push Nut	1	3	2
32112-1	Push Nut	3	10	1
32144-88	Screw - Pan Hd.	1	18	4
32144-100	Screw - Hex. Washer Hd.	1	23	2
32144-108	Screw - Pan Hd.	2	55	2

*Not Illustrated

PRODUCT CHANGES

In an effort to make improvements available to TORO owners as quickly as possible, minor changes are incorporated into Toro's products from time to time that do not become immediately shown in the Parts Catalog. If such a change has been made in your unit, which is not reflected in your manual, see your TORO Distributor or his Authorized TORO Service Dealer for information and part numbers.

COUNTRIES OTHER THAN THE UNITED STATES OR CANADA

Customers who have purchased TORO products exported from the United States or Canada should contact their Toro Distributor (Dealer) to obtain guarantee policies for your country, province or state. If for any reason you are dissatisfied with your Distributor's service or have difficulty obtaining guarantee information, contact the TORO importer. If all other remedies fail, you may contact us at The Toro Company.

MAINTENANCE RECORD

Date								

Compliance with Radio Interference Regulations Certified.
Certifie Conforme au Reglement sur le Brouillage Radioelectrique.

MAINTENANCE RECORD

Date								