FORM NO. 3316–404

TORO®

MODEL NO. 38171–4900001 & UP
MODEL NO. 38176–4900001 & UP

PARTS CATALOG

CCR POWERLITE™ RECOIL
CCR POWERLITE ™ELECTRIC

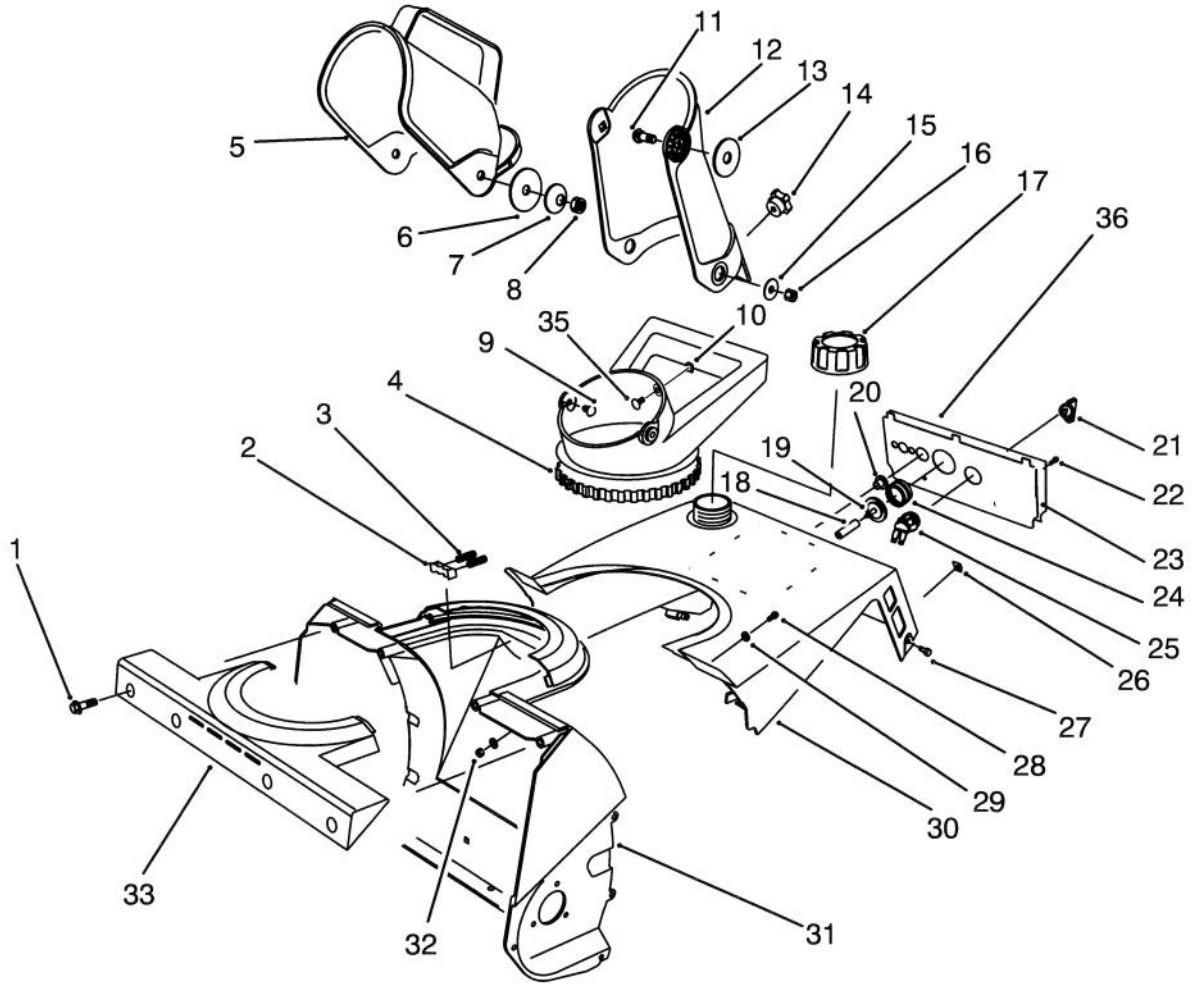

CHUTE ASSEMBLY

Ref. No.	Part No.	Description	No. Used
1	46–8094	Screw – Hex. Washer Hd.	4
2	75–9160	Detent – Chute	1
3	75–9170	Spring – Compression	2
4	75–8670	Handle – Chute	1
5	75–8770	Deflector – Chute	1
6	3256–68	Washer – Flat	2
7	3290–340	Washer – Belleville	2
8	3296–29	Nut – Lock	2
9	321–3	Screw	2
10	32115–15	Retainer	3
11	3230–2	Screw – Carriage	2
12	75–8761	Chute – Discharge	1
13	80–0640	Washer – Rubber	2
14	233–67	Knob	1
15	3256–81	Washer – Flat	2
16	3296–56	Nut – Lock	2
17	55–3573	Cap Assembly – Fuel	1
18	44–3173	Hose	1
19	44–2750	Body – Primer	1
20	23–7470	Guide – Rope	1
21	63–8360	Key – Ignition	1
22	32144–53	Screw – Acorn Slotted Hd.	2
23	75–9031	Panel – Control (Model 38171 Only)	1
	75–9030	Panel – Control (Model 38176 Only)	1
24	66–7460	Bulb – Primer	1
25	40–5940	Switch – On/Off	1
26	49–1490	J–Nut	2
27	32144–89	Screw – Hex. Hd.	2

© The TORO Company –1993
All rights reserved.

TPS

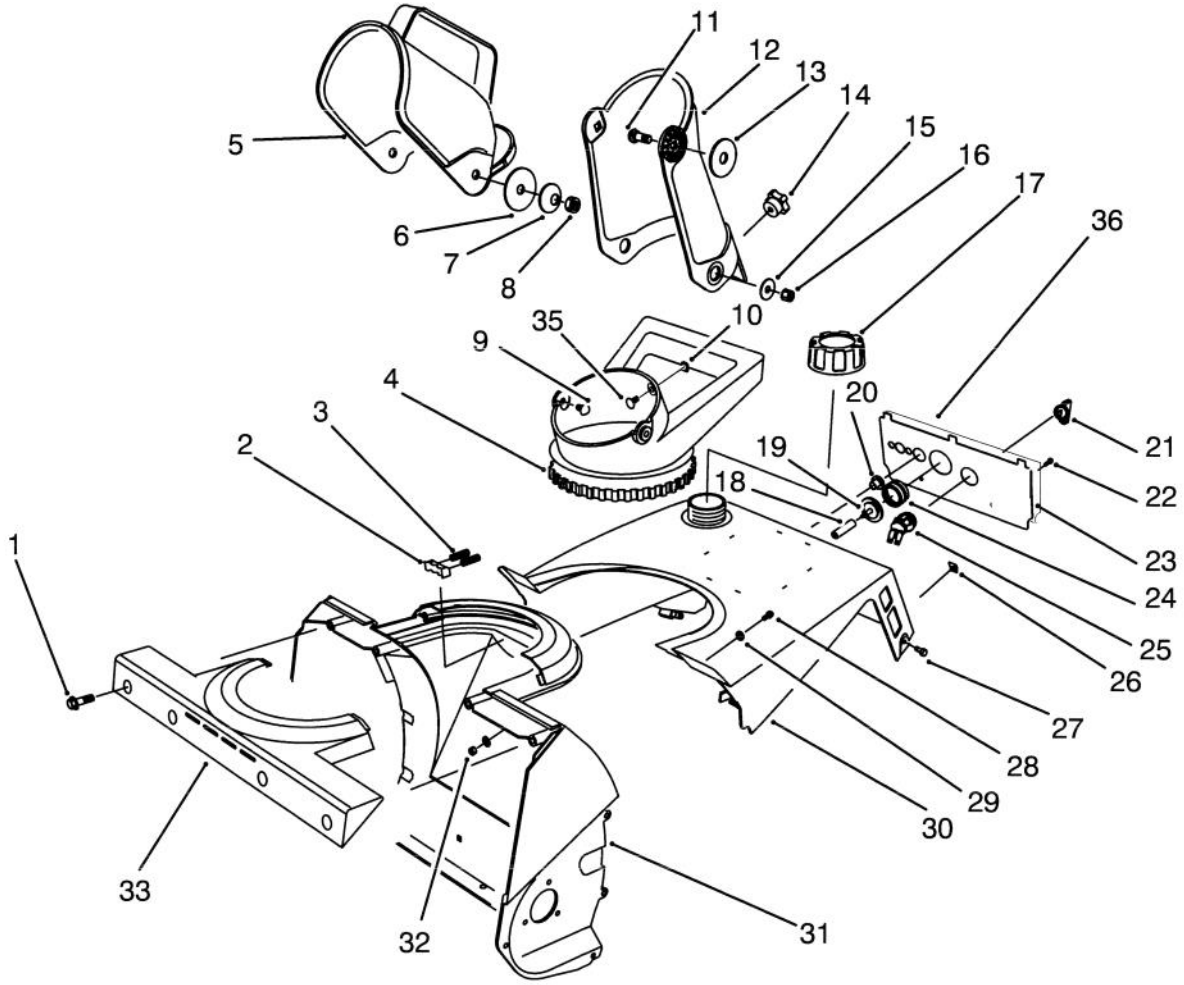

C−0623

CHUTE ASSEMBLY (CONTINUED)

Ref. No.	Part No.	Description	No. Used
28	3250−32	Screw − Pan Hd.	2
29	3256−1	Washer − Flat	4
30	75−8800	Shroud − Upper (Model 38171)	1
	75−8801	Shroud − Upper (Model 38176)	1
31	75−8660	Housing	1
32	3296−42	Nut − Lock	2

Ref. No.	Part No.	Description	No. Used
33	75−8650	Retainer − Chute	1
35	3229−11	Bolt − Carriage	1
36	88−1060	Decal − Control Panel (Model #38171 only)	1
	88−1070	Decal − Control Panel (Model #38176 only)	1

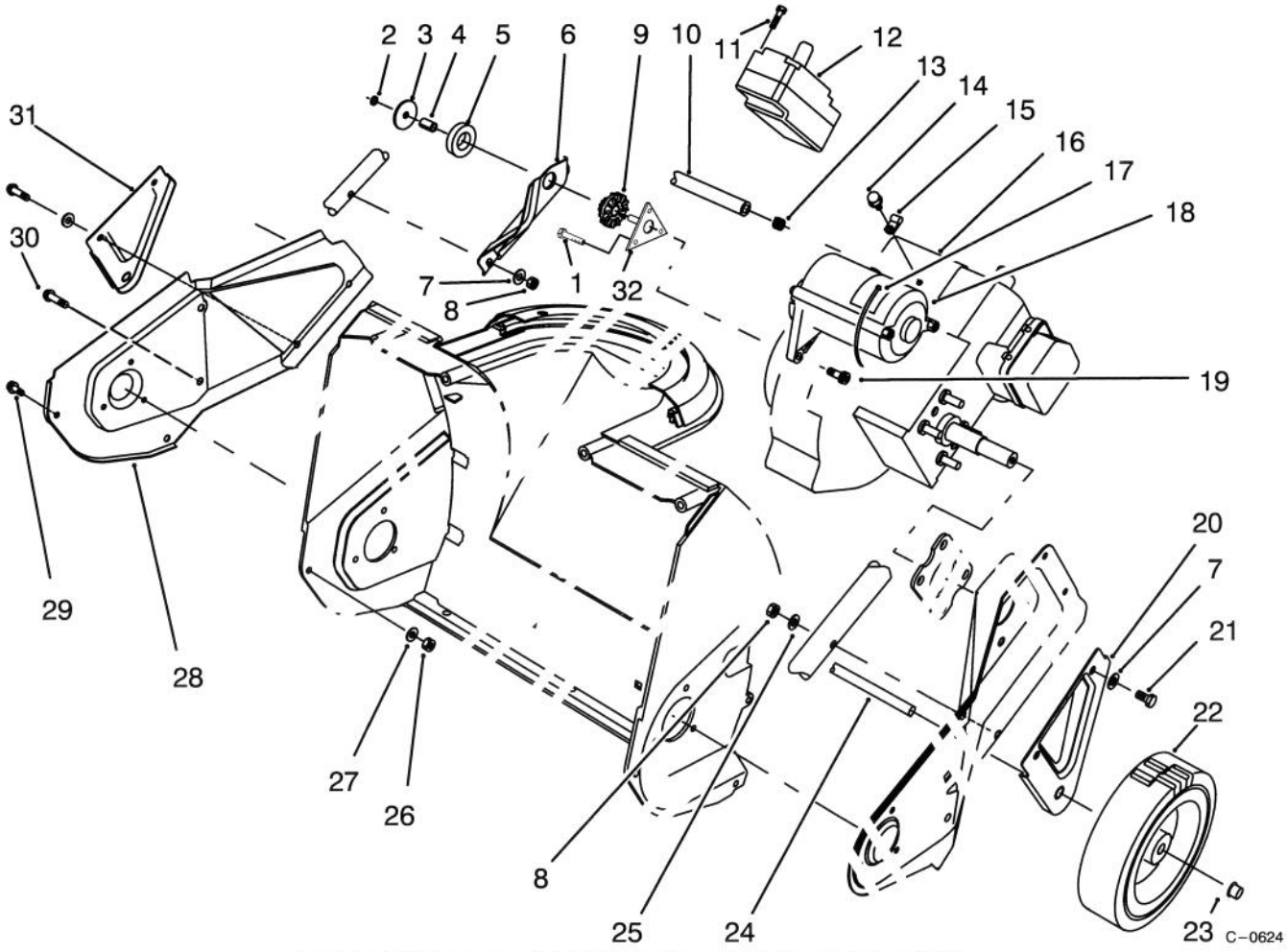

ENGINE & WHEEL ASSEMBLY

Ref. No.	Part No.	Description	No. Used
1	92–6019	Screw – Thread Forming	3
2	3296–16	Nut – Lock	1
3	3256–58	Washer – Flat	1
4	80–0650	Spacer	1
5	80–0620	Ring – Isolator	1
6	75–8980	Support – Engine	1
7	3256–1	Washer – Flat	6
8	3296–42	Nut – Lock	4
9	75–9100	Bushing – Isolation	1
10	49–2483	Hose – Fuel	1
11	32144–27	Screw (Model 38176 Only)	2
12	77–0402	Motor Switch Housing Ass'y (Model 38176 Only)	1
13	2412–86	Clamp – Hose	2
14	32144–10	Screw – Hex Washer Hd. (Model 38176 Only)	1
15	2412–91	Clamp – Cable (38176 Only)	1
16		Engine (HSK 600–1679S) (Model 38171)	1
		Engine (HSK600–1680S) (Model 38176)	1

Ref. No.	Part No.	Description	No. Used
17	250–7	Strap – Motor (Model 38176 Only)	1
18	80–4700	Starter Motor Assembly (Model 38176 Only– Incl. ref. #12)	1
19	80–0700	Screw (Model 38176 Only)	2
20	75–8910	Bracket – Wheel L.H.	1
21	321–10	Screw – Hex. Hd.	4
22	23–3250	Wheel	2
23	3290–320	Nut – Push On	2
24	27–0062	Axle	1
25	3–7501	Washer – Curved	2
26	3296–2	Nut – Lock	1
27	3256–14	Washer – Flat	1
28	75–8820	Sideplate – R.H.	1
29	32105–23	Screw – Hex. Washer Hd.	1
30	46–8094	Screw – Hex. Washer Hd.	3
31	75–8900	Bracket – Wheel R.H.	1
32	92–6012	Bracket & Stud Assembly	1

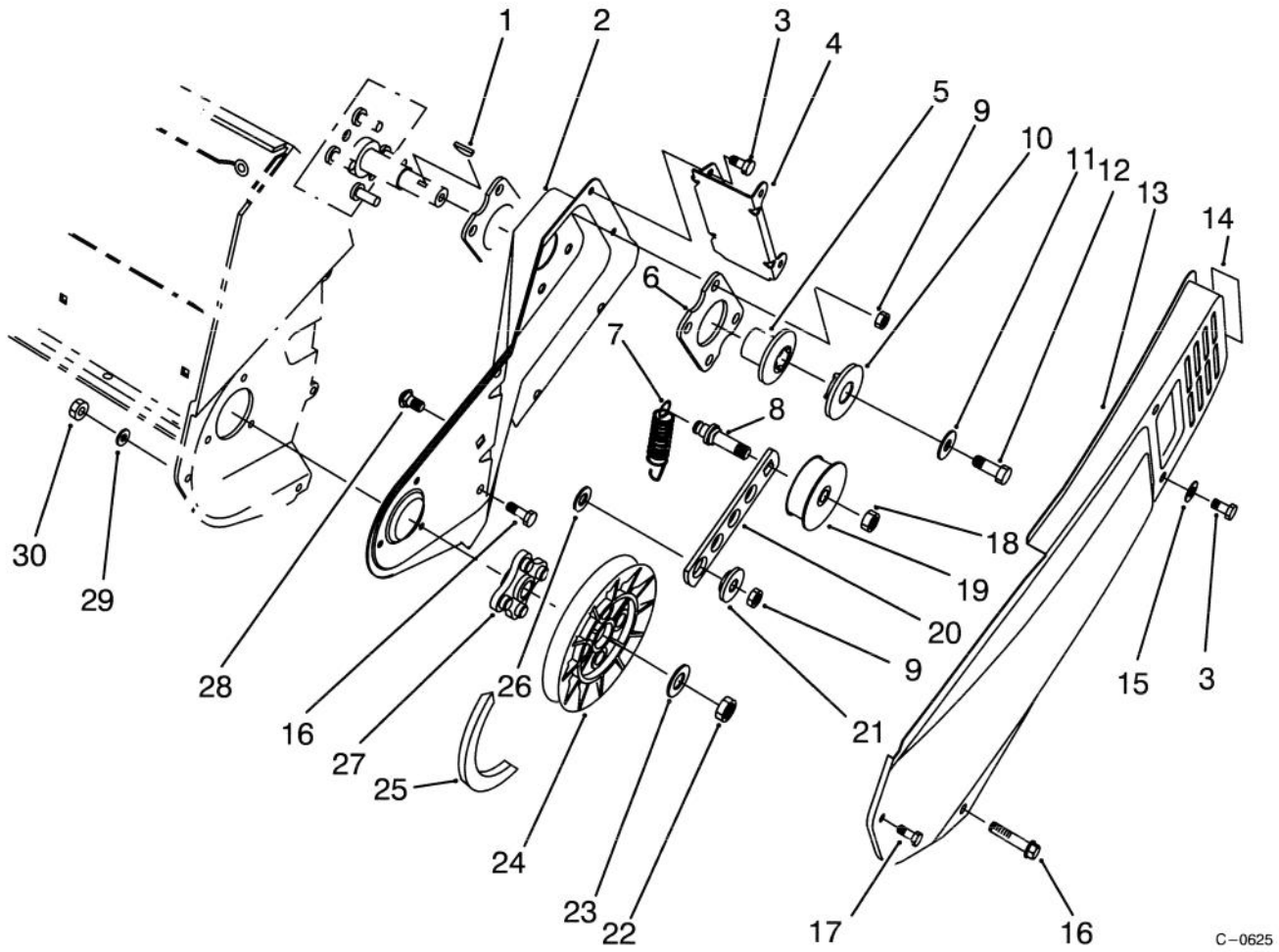

PULLEY & BELT COVER ASSEMBLY

Ref. No.	Part No.	Description	No. Used
1	3257−3	Key − Woodruff	1
2	75−8810	Sideplate − L.H.	1
3	32144−4	Screw − Hex. Hd.	4
4	75−8870	Bracket − Belt Cover	1
5	71−5050	Hub − Half Sheave	1
6	71−5290	Plate Engine	2
7	75−9020	Spring − Idler	1
8	75−8720	Pin − Idler	1
9	3296−29	Nut − Lock	5
10	71−5060	Cap − Half Sheave	1
11	3256−71	Washer − Flat	1
12	3235−6	Screw − Hex. Hd.	1
13	75−8830	Cover − Belt	1
14	84−5250	Decal − Hot	1
15	3256−1	Washer − Flat	2

Ref. No.	Part No.	Description	No. Used
16	46−8094	Screw − Hex. Washer Hd.	3
17	32105−23	Screw − Hex. Hd.	1
18	3296−59	Nut − Lock	1
19	71−5260	Pulley − Idler	1
20	75−9050	Arm − Idler	1
21	75−8700	Bushing − Idler	1
22	3296−38	Nut − Lock	1
23	3256−25	Washer − Flat	1
24	75−8750	Pulley − Driven	1
25	75−9010	V−Belt − Drive	1
26	25−5640	Washer	1
27	75−8740	Hub − Driven Pulley	1
28	3230−23	Screw − Carriage	1
29	3256−14	Washer − Flat	1
30	3296−2	Nut − Lock	1

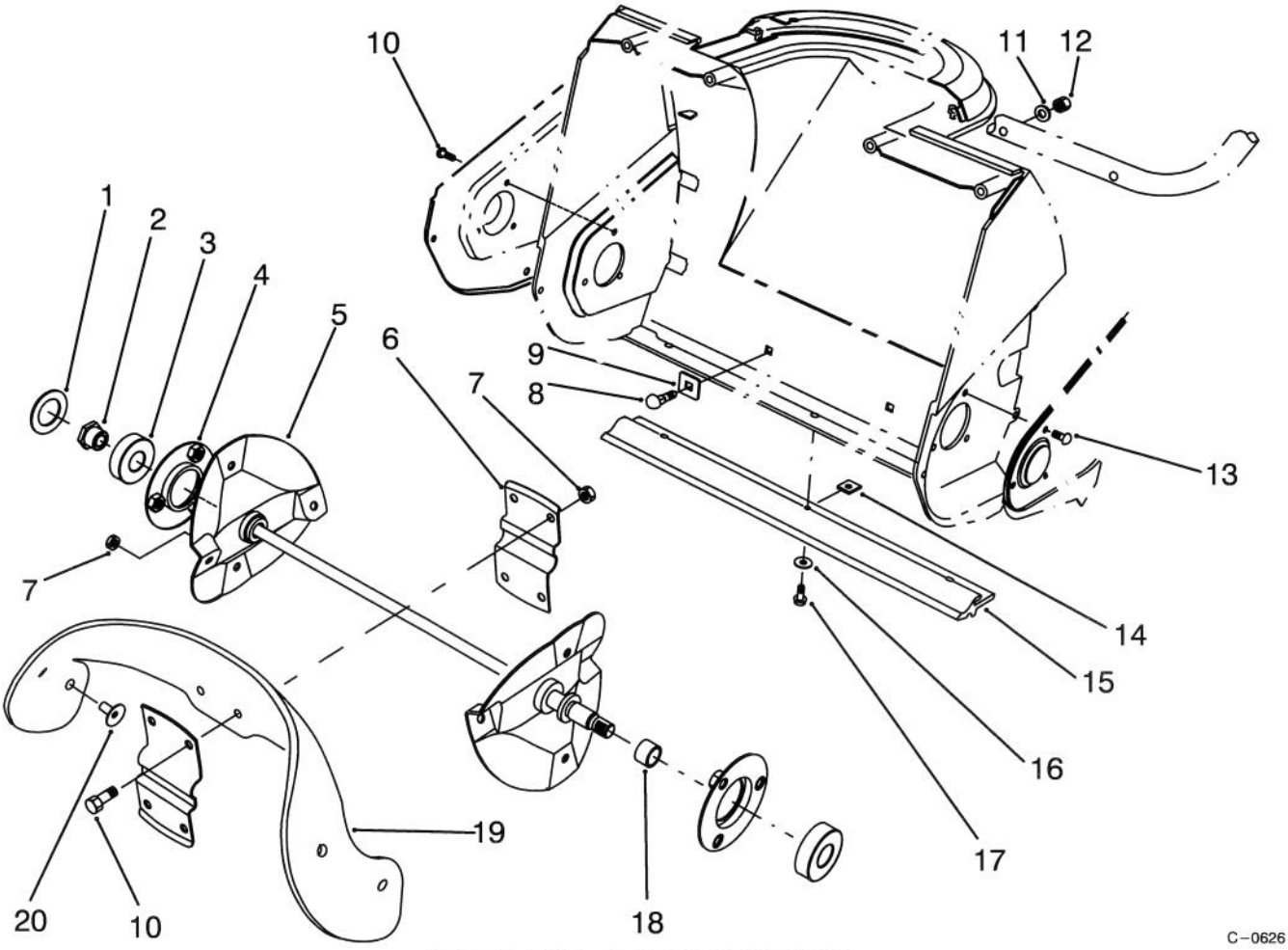

C–0626

AUGER ASSEMBLY

Ref. No.	Part No.	Description	No. Used
1	75–9180	Washer – Rubber	1
2	75–8690	Nut – Rotor Shaft	1
3	38–7820	Bearing – Ball	2
4	75–9080	Flange – Bearing	2
5	75–8840	Rotor	1
6	75–8880	Support – Rotor	2
7	3296–56	Nut – Lock	12
8	3229–5	Screw – Carriage	2
9	75–9040	Washer – Square	2
10	3234–33	Screw – Hex. Hd.	7

Ref. No.	Part No.	Description	No. Used
11	3–7501	Washer – Curved	2
12	3296–42	Nut – Lock	2
13	321–3	Screw – Hex. Hd.	3
14	32115–19	J–Nut	3
15	75–8780	Scraper	1
16	3256–14	Washer – Flat	3
17	32144–34	Screw – Hex. Hd.	3
18	75–8710	Spacer – Auger Shaft	1
19	84–1980	Blade – Rotor	2
20	84–1970	Screw – Countersunk Oval	8

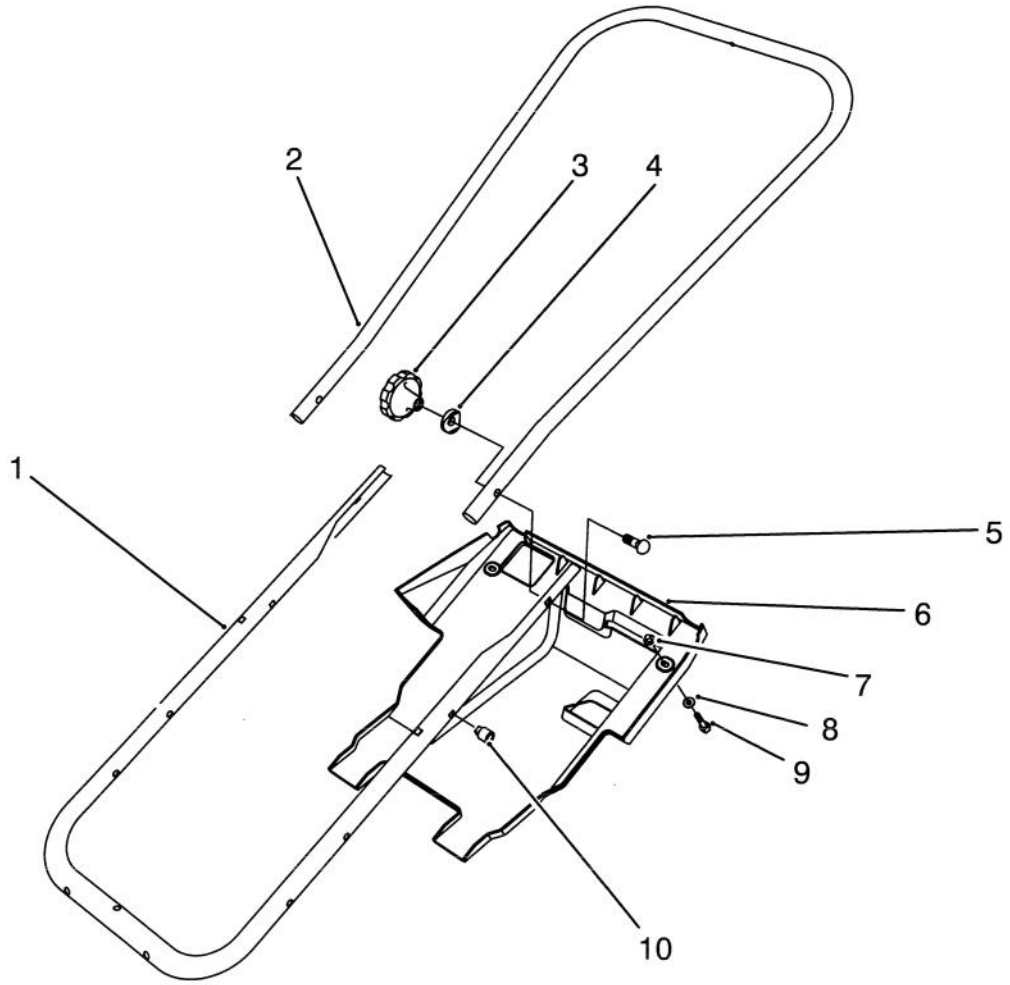

C–0627

HANDLE ASSEMBLY

Ref. No.	Part No.	Description	No. Used
1	75–9060	Tube – Frame	1
2	75–9070	Handle – Upper	1
3	19–4050	Knob – Handle Release	2
4	75–9130	Washer – PM	2
5	17–9426	Screw – Handle	2
6	75–8790	Shroud – Lower	1

Ref. No.	Part No.	Description	No. Used
7	3290–453	Nut – Push	2
8	3256–14	Washer – Flat	2
9	32144–34	Screw – Hex. Hd.	2
10	32115–17	Nut – Push	2
*	61–4790	Decal – Warning (Model 38176 Only)	1

*Not Illustrated

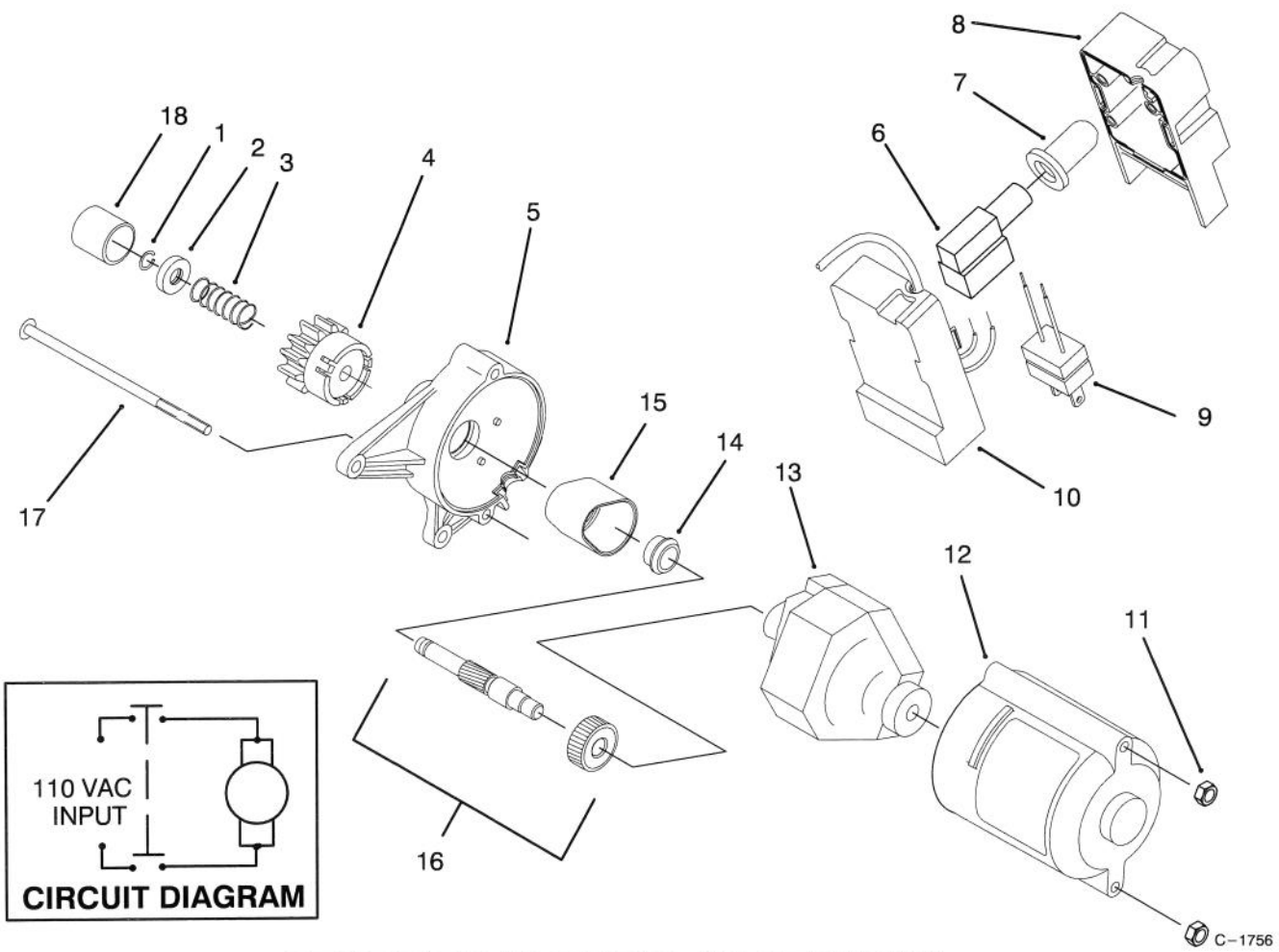

STARTER MOTOR ASSEMBLY (MODEL 38176 ONLY)

Ref. No.	Part No.	Description	No. Used
1	61–4680	Ring – Lock	1
2	61–4670	Stop – Pinion	1
3	61–4690	Spring – Anti – Drift	1
4	84–5240	Pinion Assembly	1
5	70–7810	Housing – Upper Starter	1
6	61–4820	Switch – Starter	1
7	61–4810	Boot – Switch	1
8	80–3740	Cap – Switch Housing	1
9	36–8370	Plug – Power	1
10	80–3730	Base – Switch Housing	1

Ref. No.	Part No.	Description	No. Used
11	3296–2	Nut – Lock	2
12	70–7820	Housing – Lower Starter	1
13	70–7830	Motor	1
14	70–7900	Bushing – Upper	1
15	70–7850	Cover – Gear	1
16	92–6003	Gear & Shaft Assembly	1
17	32144–101	Screw – Machine	2
18	70–7890	Cap – Pinion	1
*	77–0402	Starter Motor Assembly	1
*	28–9170	Cord – 7 Ft.	1

*Not Illustrated

ENGINE TECUMSEH MODEL NO. HSK600 TYPE 1679S (Model 38171 Only)

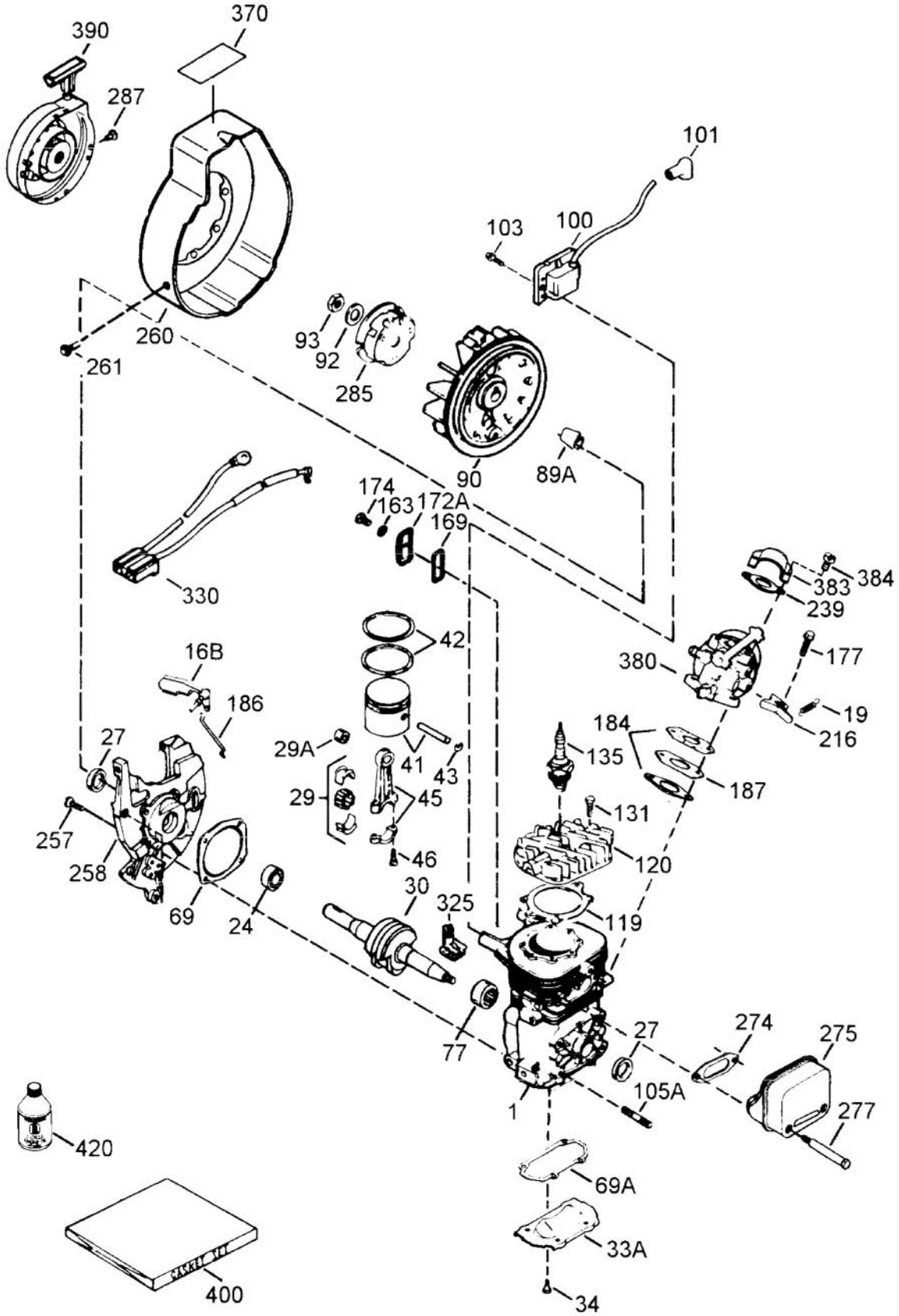

C−1763

ENGINE TECUMSEH MODEL NO. HSK600 TYPE 1679S (Model 38171 Only)

Ref. No.	Part No.	Description	No. Used
1		Block Ass'y – Cylinder (Order short block if replacement is required)	1
16B	490291A	Vane Ass'y – Air	1
19	570707	Spring – Governor	1
24	530110	Bearing – Ball	1
27	510319	Seal – Crankshaft	2
29	530150	Bearing & Liner Set – Needle (37 Needles)	1
29A	530104A	Bearing – Cartridge	1
30	290602	Crankshaft	1
33A	570644	Plate – Cover	1
34	650579	Screw – Pan Flex Hd.	4
41	310283A	Piston & Pin Ass'y (Incl. ref. #43)	1
42	310190	Ring Set – Piston	1
43	310167	Ring – Piston Pin Retaining	2
45	310235B	Rod Ass'y – Connecting (Incl. ref. #29, 29A & 46)	1
46	650633	Screw – Connecting Rod	2
69	*510292A	Gasket – Cylinder Cover	1
69A	*510323A	Gasket – Cover Plate	1
77	530105	Bearing – Needle	1
89A	611032	Sleeve – Flywheel	1
90	611112	Flywheel	1
92	650815	Washer – Belleville	1
93	650390	Nut – Flywheel	1
100	34443A	Solid State Assembly (Incl. ref. #101)	1
101	610118	Cover – Spark Plug	1
103	650814	Screw – Hex. Hd. Sems	2
105A	650796	Stud – Cylinder	4
119	*510274A	Gasket – Cylinder Head	1
120	250240B	Head – Cylinder	1
131	650477	Screw – Pan Flex Hd.	5
135	611049	Plug – Spark (RCJ–8Y or equivalent)	1
169	*510325A	Gasket – Cover	1
172A	570708	Cover Assembly – Compression Release	1
174	650579	Screw – Pan Flex Hd.	1
163	650838	Washer – Flat	1
177	650959	Screw	2
184	*510326A	Gasket – Carburetor	2
186	490322	Link – Governor	1
187	570438A	Spacer	1
216	570645	Level – Adjusting	1
239	35815	Gasket – Filter Base	1
257	650911	Screw – Torx Pan Hd.	4
258	350396	Base Assembly – Blower Housing (Incl ref. #27)	1
260	350445	Housing – Blower	1
261	650737	Screw – Hex Washer Hd.	4
274	*510207A	Gasket – Exhaust	1
275	390332	Muffler (Incl. ref. #274 & 277)	1
277	650869	Screw – Hex Hd.	2
285	590551	Cup – Starter	1
287	650926	Screw	3
325A	29443	Clip – Spring	1
330	611131A	Harness – Wire	1
370	35977	Decal – Caution	1
380	632641	Carburetor (Incl. ref. #184)	1
383	570434	Baffle – Air	1
384	650229	Screw – Pan Hd. Sems	2
390	590652	Starter Ass'y – Rewind	1
400	510324B	Gasket Set	1
420	730227A	Oil – 2 Cycle (8 oz.)	1

*Indicates parts included in Gasket Set ref. #400

ENGINE TECUMSEH MODEL NO. HSK600 TYPE 1680S (Model 38176 Only)

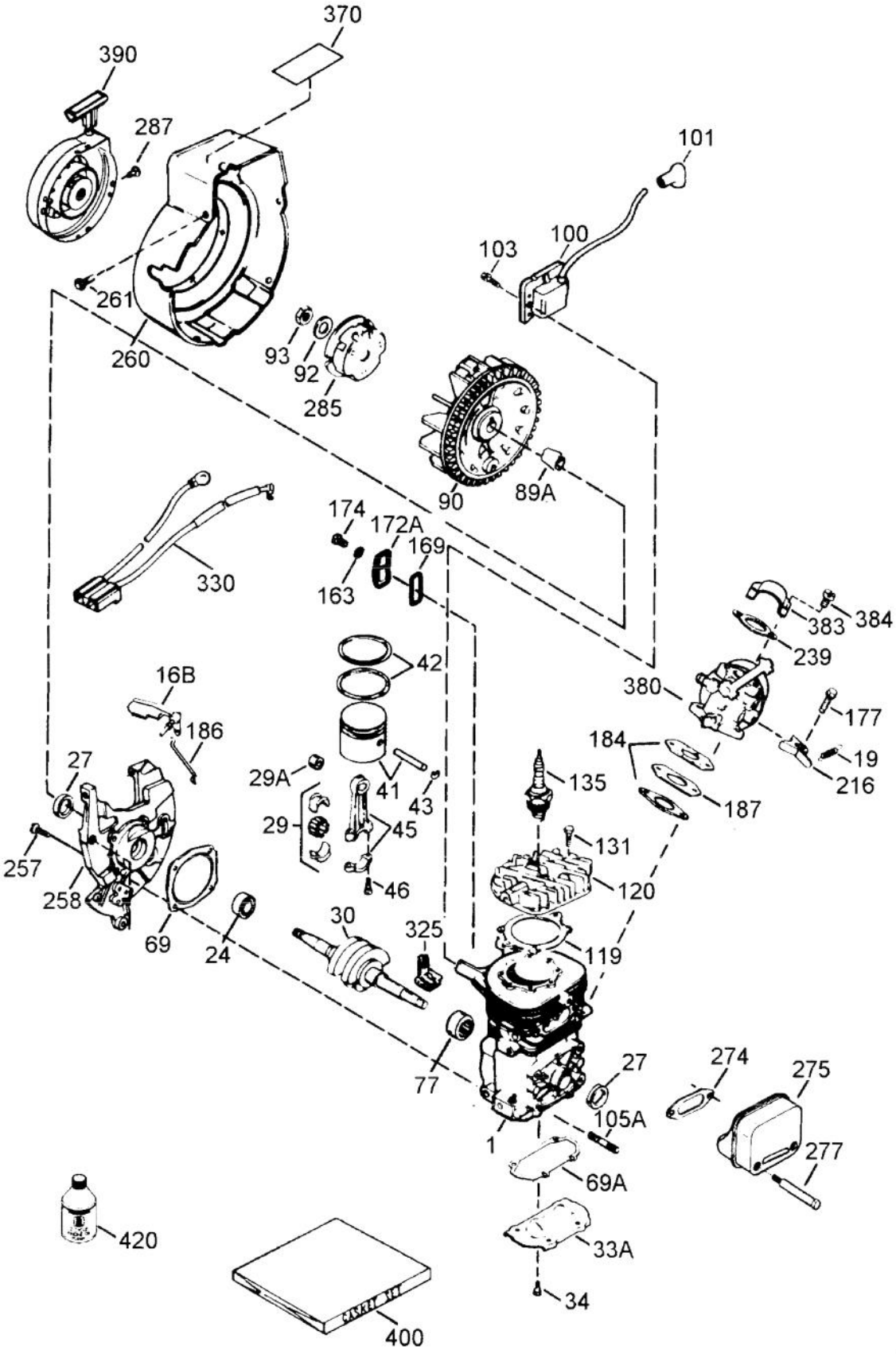

C−1764

ENGINE TECUMSEH MODEL NO. HSK600 TYPE 1680S (Model 38176 Only)

Ref. No.	Part No.	Description	No. Used
1		Block Ass'y – Cylinder (Order short block if replacement is required)	1
16B	490291A	Vane Ass'y – Air	1
19	570707	Spring – Governor	1
24	530110	Bearing – Ball	1
27	510319	Seal – Crankshaft	2
29	530150	Bearing & Liner Set – Needle (37 Needles)	1
29A	530104A	Bearing – Cartridge	1
30	290602	Crankshaft	1
33A	570644	Plate – Cover	1
34	650579	Screw – Pan Flex Hd.	4
41	310283A	Piston & Pin Ass'y (Incl. ref. #43)	1
42	310190	Ring Set – Piston	1
43	310167	Ring – Piston Pin Retaining	2
45	310235B	Rod Ass'y – Connecting (Incl. ref. #29, 29A & 46)	1
46	650633	Screw – Connecting Rod	2
69	*510292A	Gasket – Cylinder Cover	1
69A	*510323A	Gasket – Cover Plate	1
77	530105	Bearing – Needle	1
89A	611032	Sleeve – Flywheel	1
90	611066	Flywheel	1
92	650815	Washer – Belleville	1
93	650390	Nut – Flywheel	1
100	34443A	Solid State Ass'y (Incl. Ref. #101)	1
101	610118	Cover – Spark Plug	1
103	650814	Screw – Hex. Hd. Sems	2
105A	650796	Stud – Cylinder	4
119	*510274A	Gasket – Cylinder Head	1
120	250240B	Head – Cylinder	1
131	650477	Screw – Pan Flex Hd.	5
135	611049	Plug – Spark (RCJ–8Y or equivalent)	1
163	650838	Washer – Flat	1
169	*510325A	Gasket – Cover	1
172A	570708	Cover Ass'y – Compression Release	1
174	650579	Screw – Torx. Hd.	1
177	650959	Screw	2
184	*510326A	Gasket – Carburetor	2
186	490322	Link – Governor	1
187	570438A	Spacer	1
216	570645	Level – Adjusting	1
239	35815	Gasket – Filter Base	1
257	650911	Screw – Torx Pan Hd.	4
258	350422	Base Ass'y – Blower Housing (Incl ref. #27)	1
260	350437	Housing – Blower	1
261	650737	Screw – Hex. Washer Hd.	3
274	*510207A	Gasket – Exhaust	1
275	390332	Muffler (Incl. Ref. #274 & 277)	1
277	650869	Screw – Torx Pan Hd.	2
285	590551	Cup – Starter	1
287	650926	Screw	3
325A	29443	Clip – Spring	1
330	611131A	Harness – Wire	1
370	35977	Decal – Caution	1
380	632641	Carburetor (Incl. ref. #184)	1
383	570434	Baffle – Air	1
384	650229	Screw – Pan Hd. Sems	2
390	590652	Starter Ass'y – Rewind	1
400	510324B	Gasket Set	1
422	730227A	Oil – 2 Cycle (8 oz.)	1

*Indicates parts included in Gasket Set ref. #400

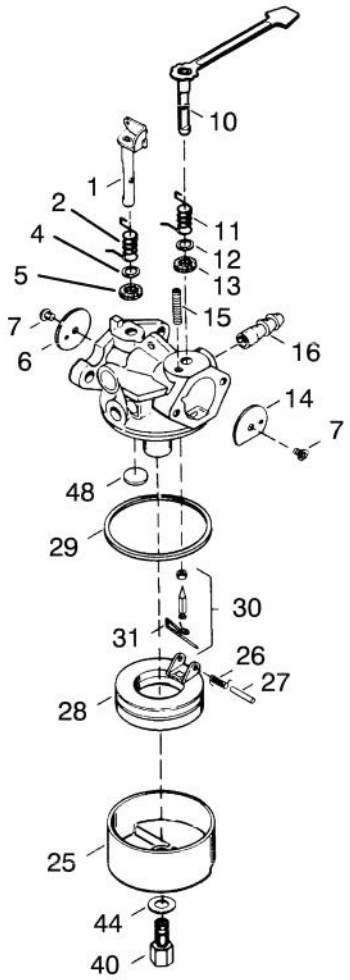

C–1748

CARBURETOR NO. 632641

Ref. No.	Part No.	Description	No. Used
1	632166	Throttle Shaft & Lever Assy.	1
2	632169	Spring – Throttle Return	1
4	631184	Washer – Steel	1
5	631183	Washer – Felt	1
6	631621	Shutter – Throttle	1
7	650506	Screw – Shutter	2
10	632553	Choke Shaft & Lever Assy.	1
14	631815	Shutter – Choke	1
15	630735	Spring – Choke Positioning	1
16	632164	Fitting – Fuel Inlet	1
25	631700	Bowl – Float	1

Ref. No.	Part No.	Description	No. Used
26	632386	Spring – Float Shaft	1
27	631024	Shaft – Float	1
28	632019	Float – Carburetor	1
29	631028	Seal – O–Ring	1
30	631021	Inlet Needle, Seat & Clip (Incl. ref. #3)	1
31	631022	Clip – Inlet Needle	1
40	632385	Nut – Float Bowl	1
44	631334	Gasket – Bowl	1
48	631027	Plug – Welch	1

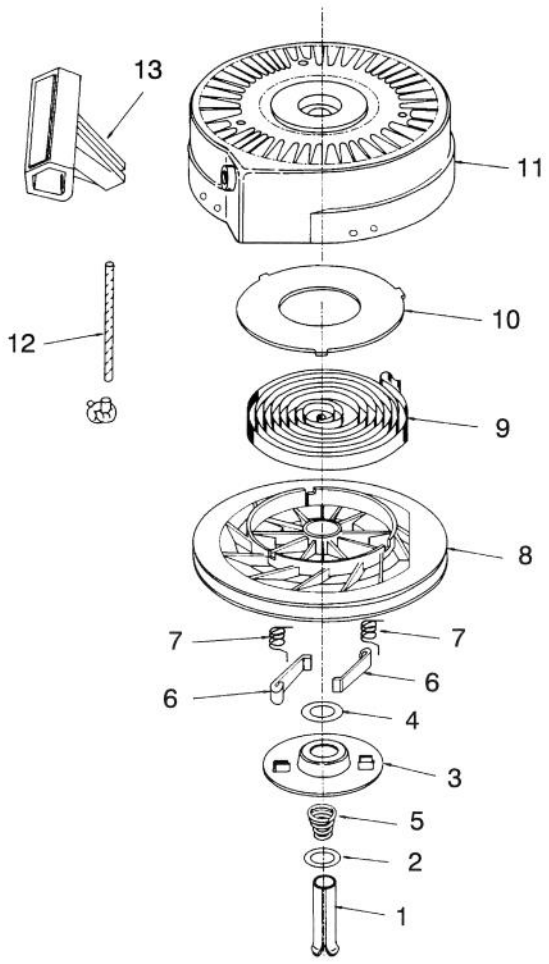

C–1750

RECOIL STARTER NO. 590652

Ref. No.	Part No.	Description	No. Used
1	590599A	Pin – Spring (Incl. Ref. #4)	1
2	590600	Washer	1
3	590615	Retainer	1
4	590601	Washer	1
5	590598	Spring – Brake	1
6	590616	Dog – Starter	2
7	590617	Spring – Dog	2

Ref. No.	Part No.	Description	No. Used
8	590413A	Pulley Assembly (Incl. Ref. #9 & 10)	1
9	590619	Spring – Rewind	1
10	590620	Cover – Spring	1
11	590643	Starter Housing Assembly	1
12	590535	Rope – Starter	1
13	590452	Handle – Starter	1

MAINTENANCE RECORD

Date								

MAINTENANCE RECORD

Date								

PRODUCT CHANGES

In an effort to make improvements available to TORO owners as quickly as possible, minor changes are incorporated into Toro's products from time to time that do not become immediately shown in the Parts Catalog. If such a change has been made in your unit, which is not reflected in your manual, see your TORO Distributor or his Authorized TORO Service Dealer for information and part numbers.

IDENTIFICATION AND ORDERING

MODEL AND SERIAL NUMBERS

The Snowthrower has two identification numbers; a model number and a serial number. The two numbers are stamped on a decal which is located on back of the frame assembly. In any correspondence concerning the snowthrower, supply model and serial numbers to assure that correct information and replacement parts are obtained.

To order replacement parts from an Authorized TORO Service Dealer, supply the following information:

1. Model and serial number of the snowthrower.
2. Part number, description, and the quantity of part(s) desired.

NOTE: Do not order by reference number if a parts catalog is being used; use the PART NUMBER.

COUNTRIES OTHER THAN THE UNITED STATES OR CANADA

Customers who have purchased TORO products exported from the United States or Canada should contact their Toro Distributor (Dealer) to obtain guarantee policies for your country, province or state. If for any reason you are dissatisfied with your Distributor's service or have difficulty obtaining guarantee information, contact the TORO importer. If all other remedies fail, you may contact us at The Toro Company.

MAINTENANCE RECORD

Date								

Litho in U.S.A.