Form Number 3361-254 Rev B

Workman® MDX Utility Vehicle

Model No. 07273 - 290000001 and up.

Parts Catalog

Ordering Replacement Parts

To order replacement parts, please supply the part number, the quantity, and the description of each part desired.

Understanding Reference Numbers

Each Identified part in an illustration has a reference number. The reference number for a part also appears in the parts list, along with other information about the part.

This catalog uses two special reference number formats, one to indicate parts in a service assembly and another to indicate the quantity of a given part in an illustration.

Service Assembly Reference Numbers

Parts in service assemblies have reference numbers in the form a:b. The a represents the reference number of the entire service assembly and the b represents a sequential number unique to each part within the service assembly.

For example, a wheel assembly might be identified by reference number 6, the tire by 6:1, the valve by 6:2, and the wheel by 6:3. When you order the assembly identified by reference number 6, you receive all parts identified by reference numbers 6:1, 6:2, and 6:3. However, you may also order any part individually. Reference numbers of this type appear in illustrations and in part lists.

Reference Numbers Indicating Quantity

In an illustration, if a reference number indicates more than one part, the reference number has the form nX y. The n represents the quantity of the part, the X is the multiplication symbol, and the y represents the reference number.

For example, in an illustration, the reference number 2X 37 means that two of the parts identified by reference number 37 are indicated.

© The Toro Company - 2008
All Rights Reserved

Register your product at www.Toro.com

Contents

Description	Page
Dash Assembly	3
Pedal Box Assembly	5
Shifter Assembly	6
Front Frame Assembly	7
Seat Base Assembly	8
Front Tire, Spindle and Tie Rod Assembly	9
Engine and Clutch Assembly	10
Drive Clutch Assembly No. 108-7013	11
Starter Generator Assembly No. 99-7108	12
Rear Tire and Transaxle Assembly	13
Transaxle Assembly No. 115-2301	14
Driven Clutch Assembly No. 99-7104	16
LH Rear Brake Assembly No. 114-8332	17
RH Rear Brake Assembly No. 114-8331	18
Oil Filter and Air Cleaner Assembly	19
Air Cleaner Assembly No. 99-7120	20
Upper Steering Assembly	21
Steering Box Assembly No. 112-3130	22
Box and Tailgate Installation Assembly	23
Box and Tailgate Assembly	24
Hood and Fender Assembly	25
Frame Assembly	26
Master Cylinder and Brake Line Assembly	27
Master Cylinder Assembly No. 104-6782	28
Cylinder Assembly Briggs and Stratton 295440-0153-G1	29
Cylinder Head Assembly Briggs and Stratton 295440-0153-G1	30
Crankshaft and Piston/Ring Assembly Briggs and Stratton 295440-0153-G1	31
Crankcase Cover/Sump Assembly Briggs and Stratton 295440-0153-G1	32
Carburetor and Fuel Pump Assembly Briggs and Stratton 295440-0153-G1	33
Governor Control Assembly Briggs and Stratton 295440-0153-G1	34
Blower Housing, Flywheel and Air Guide Assembly Briggs and Stratton 295440-0153-G1	35
Intake Manifold Assembly Briggs and Stratton 295440-0153-G1	36
Engine Gasket and Carburetor Overhaul Kit Briggs and Stratton 295440-0153-G1	37
Attachments and Accessories List	38

Part Description Abbreviations

Part descriptions in this catalog may include the following abbreviations.

AR. . . . . as required
ASM. . . . . assembly
BBC. . . . . blade brake clutch
CARR. . . . . carriage
DEG. . . . . degrees
EXT. . . . . external
FH. . . . . flat head
GA. . . . . gauge
HD. . . . . heavy-duty
HF. . . . . hex flange
HH. . . . . hex head
HHF. . . . . hex head flange
HHFTF. . . . . hex head flange thread forming
HJ. . . . . hex jam
HLH. . . . . hex lag head
HOC. . . . . height-of-cut
HSBH. . . . . hex socket button head
HSFH. . . . . hex socket flat head
HSH. . . . . hex socket head
HWH. . . . . hex washer head
HWHTF. . . . . hex washer head thread forming
HYD. . . . . hydraulic
LH. . . . . left hand
NI. . . . . nylon insert
NPTF. . . . . national pipe thread fine
PFH. . . . . phillips flat head
PPH. . . . . phillips pan head
PPHTF. . . . . phillips pan head thread forming
PRH. . . . . phillips round head
PTH. . . . . phillips truss head
PTO. . . . . power-take-off
RH. . . . . right hand
ROPS. . . . . roll-over protection system
SFH. . . . . slotted fillister head
SHH. . . . . slotted hex head
SHWH. . . . . slotted hex washer head
SPH. . . . . slotted pan head
SQH. . . . . square head
SRH. . . . . slotted round head
STD. . . . . standard
TAP. . . . . self tapping
TTH. . . . . torx truss head

Footnotes

❶ Not serviced separately
❷ Obtain from your local Briggs & Stratton dealer
❸ Included in Carburetor Overhaul Kit (Ref. No. 121)
❹ Included in Engine Gasket Set (Ref. No. 358)
❺ Included in Valve Gasket Set (Ref. No. 1095)

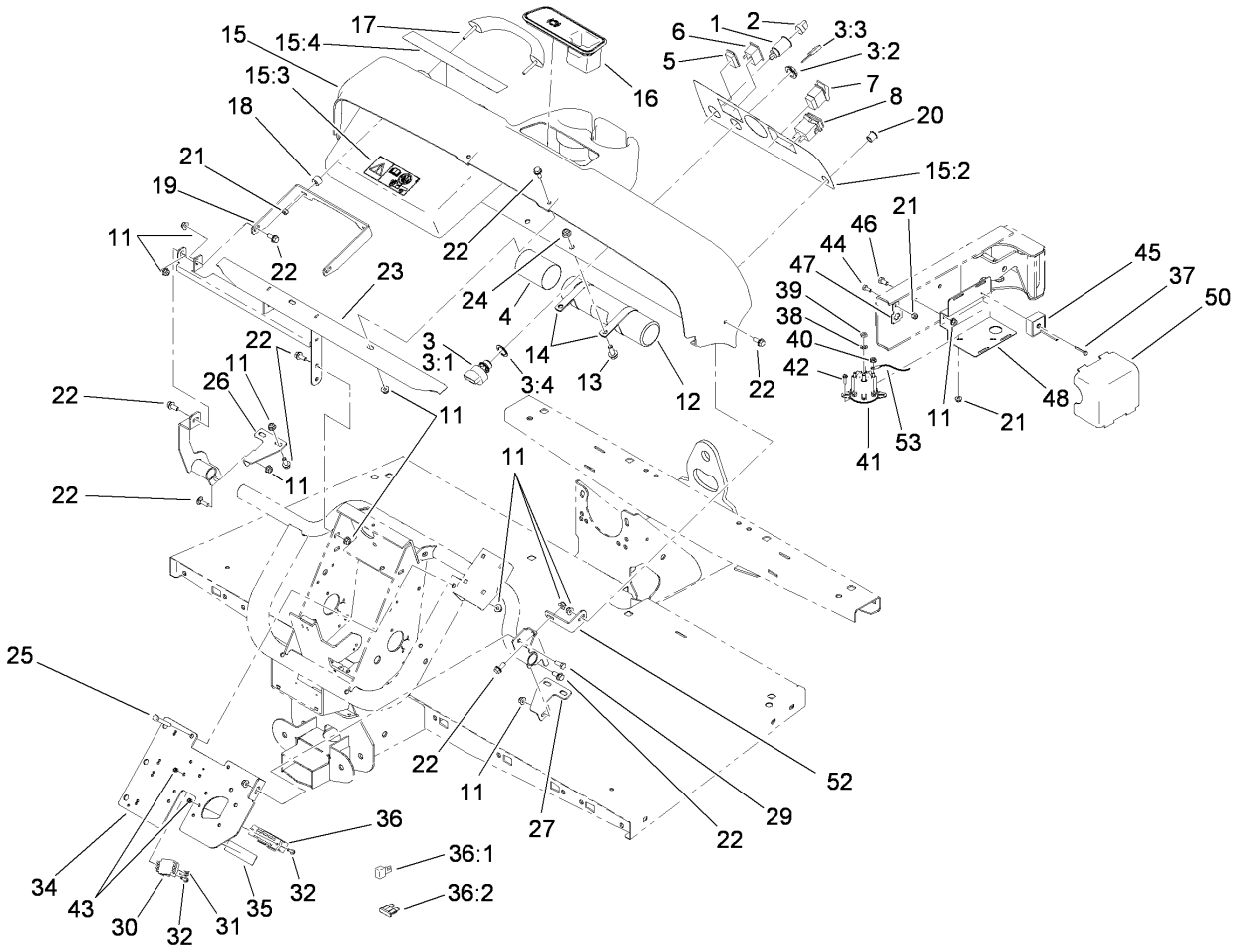

Dash Assembly

Ref	Part No.	Qty.	Description
1	99-7411	1	Point-Power
2	99-7416	1	Cap
3	112-3323	1	Ignition Switch ASM
❶3:1		1	Switch-Ignition
3:2	108-8660	1	Nut-Mounting
3:3	99-7418	1	Key-Ignition
3:4	108-8659	1	Washer-Backup
4	104-7048	1	Cap-Housing
5	99-7420	1	Plug-Hole
6	99-7410	1	Indicator-Light, Low-Oil Pressure
7	95-8999	1	Switch
8	94-4208	1	Hourmeter
11	104-8300	20	Nut-Flange, NI
12	104-7050	1	Housing-Manual
13	3234-11	2	Screw-HHF
14	2412-133	2	R-Clamp
15	114-8310	1	Dash ASM
15:2	112-3312	1	Decal-Panel, Control (Ce)
15:3	104-6581	1	Decal-Danger
15:4	115-2412	1	Decal-No Storage
16	104-6930	1	Plug-Rubber
17	112-3320	1	Handle-Grip
18	114-8301	2	Spacer
19	112-3391-03	1	Bracket-Grip, Handle

Ref	Part No.	Qty.	Description
20	94-5627	1	Plug
21	104-7201	5	Nut-HF
22	110-5053	15	Screw-Flange
23	115-7651-03	1	Dash Support ASM
24	104-8301	2	Nut-Flange, NI
25	322-11	2	Screw-HH
26	114-8304	1	Bracket-Dash Mount, RH
27	114-8312	1	Bracket-Dash Mount, LH
29	322-3	1	Screw-HH
30	42862	1	Block-Terminal, Ground
31	42863	1	Strip-Jumper
32	32105-13	4	Screw-HWH
34	112-3376-03	1	Plate-Mount, Electrical
35	112-3325	1	Decal-Block, Fuse
36	115-8137	1	Harness-Wire, Main
36:1	100-4918	1	Diode
36:2	218-578	3	Fuse-10 Amp
37	100-4352	1	Screw-HWH
38	3255-8	2	Washer-Lock
39	3220-2	2	Nut-Jam
40	32149-8	2	Nut-Keps
41	114-3315	1	Solenoid-12 Vdc
42	3234-33	2	Screw-HHF
43	3296-2	4	Nut-Lock

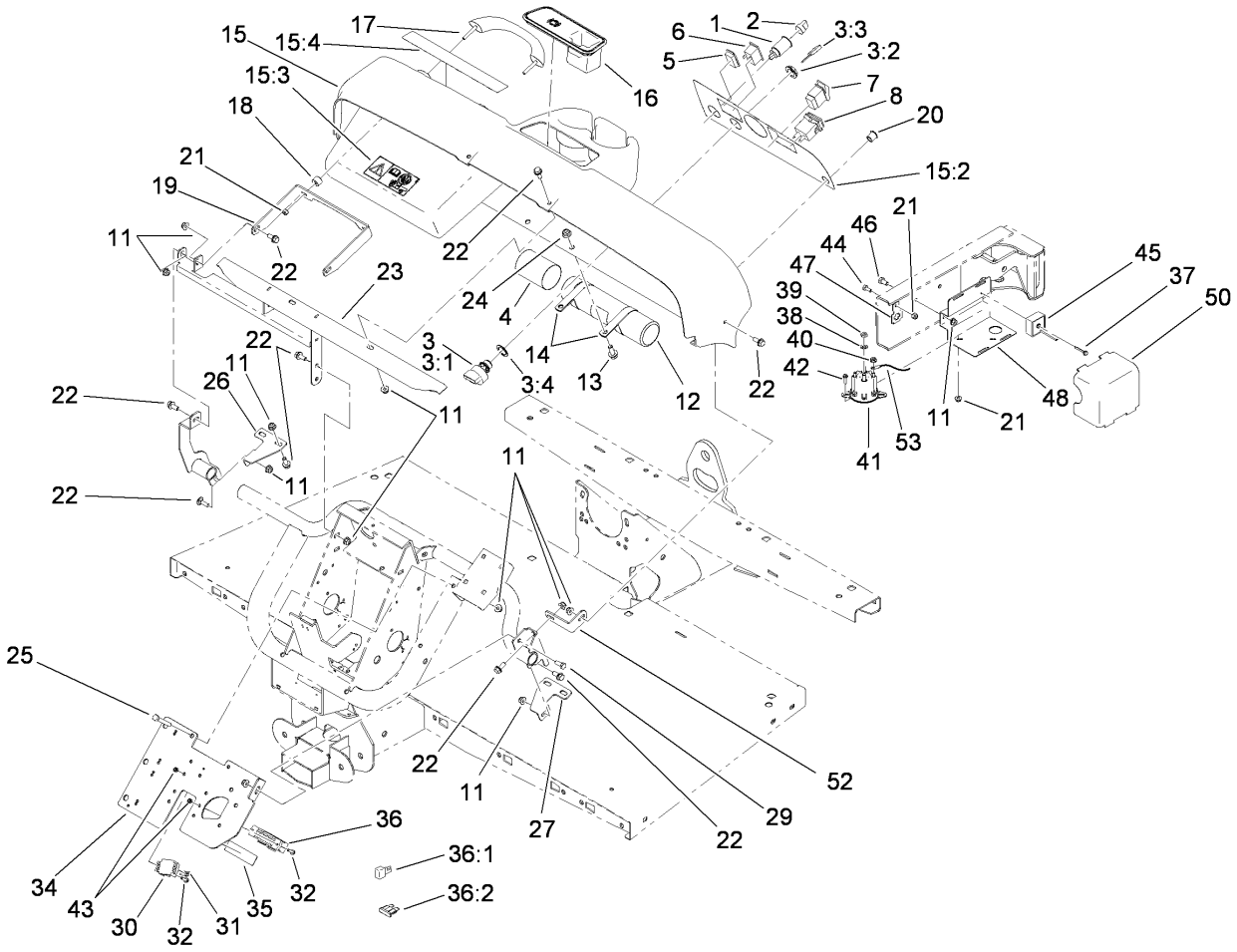

Dash Assembly (continued)

Ref	Part No.	Qty.	Description
44	321-3	1	Screw-HH
45	104-6927	1	Regulator
46	322-2	2	Screw-HH
47	114-5502	1	Clip-Fuse
48	112-3025-03	1	Mount-Component
50	112-3027	1	Cover-Controller
52	114-8305	1	Angle-Mount, Dash (LH)
53	112-3537	1	Cable-Battery, Positive

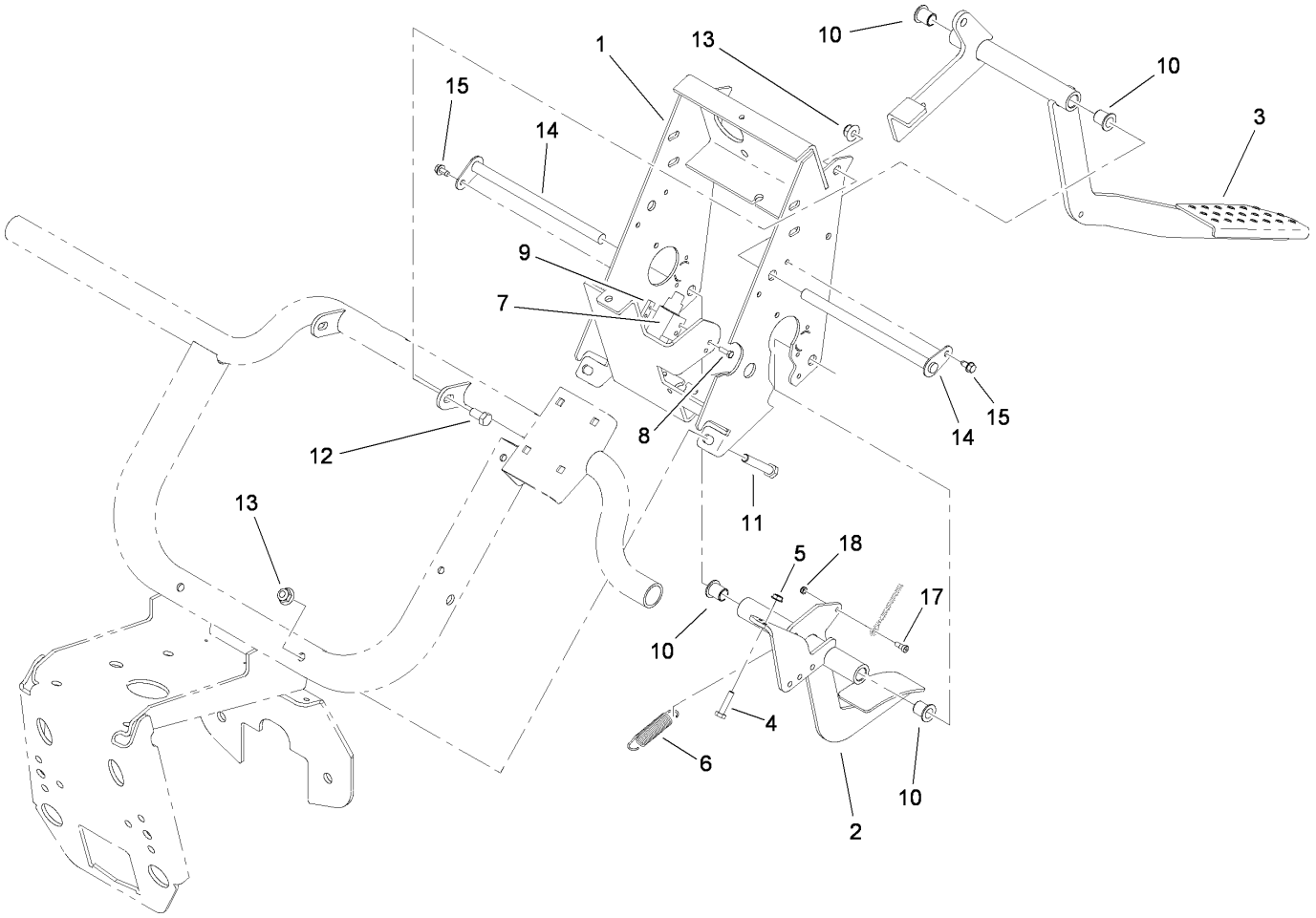

Pedal Box Assembly

Ref	Part No.	Qty.	Description
1	112-3317-03	1	Pedal Support Frame ASM
2	115-7630-03	1	Throttle Pedal ASM
3	112-3314-03	1	Brake Pedal ASM
4	321-7	2	Screw-HH
5	32149-2	2	Nut-Keps
6	104-6415	1	Spring-Return, Pedal
7	99-7407	1	Switch
8	3290-134	2	Screw
9	1-633181	1	Plate-Tapped
10	256-155	4	Bushing-Flange
11	323-11	2	Screw-HH
12	323-4	2	Screw-HH
13	104-8301	4	Nut-Flange, NI
14	104-7164	2	Pivot-Pedal
15	12-3270	2	Screw
17	115-7632	1	Bolt-Shoulder
18	3296-47	1	Nut-Lock, NI

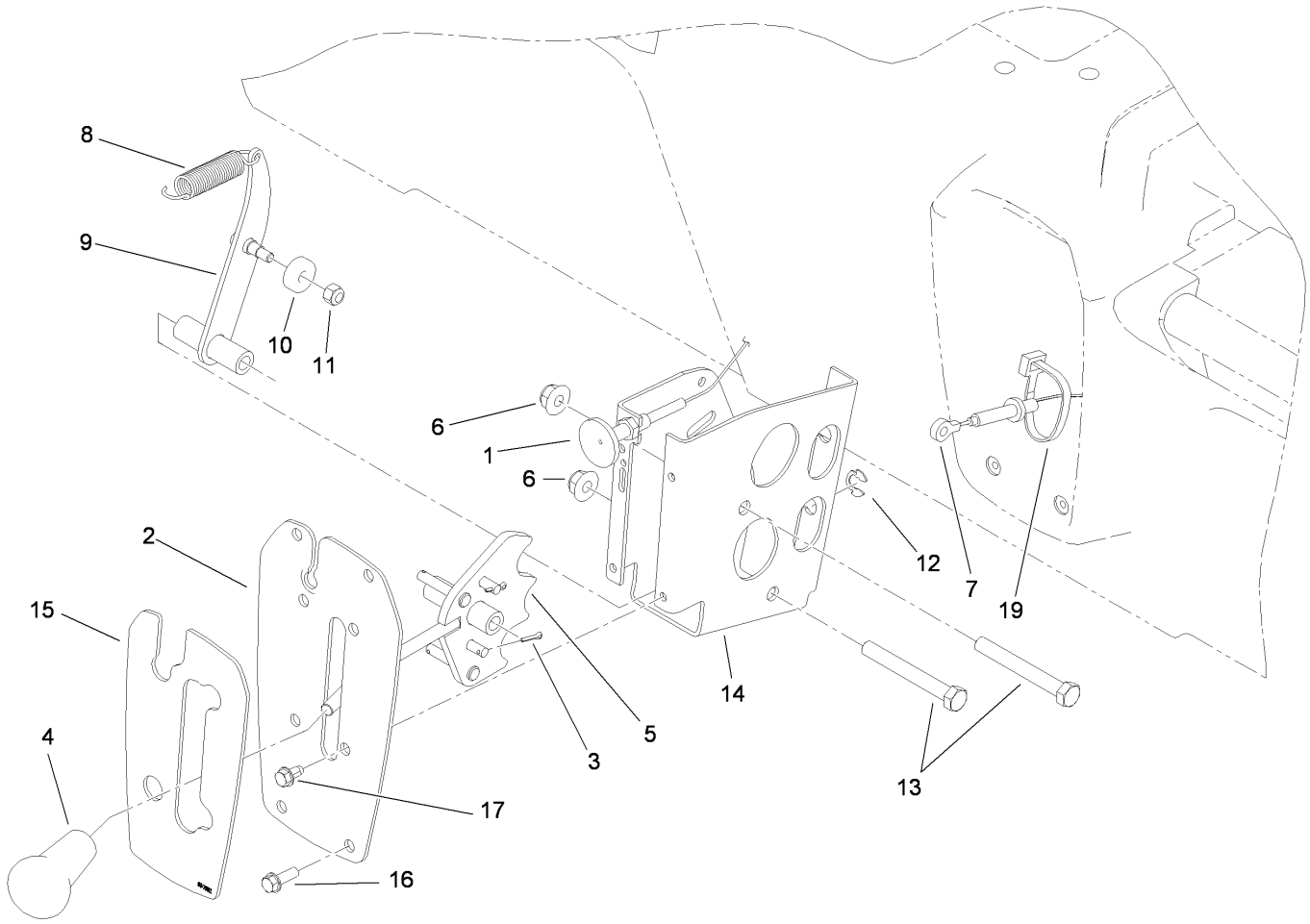

Shifter Assembly

Ref	Part No.	Qty.	Description
1	99-7111	1	Cable-Choke
2	99-7887-03	1	Plate-Shifter
3	3272-5	2	Pin-Cotter
4	99-7981	1	Knob-Grip, Soft
5	112-3378	1	Shifter-Plate
6	104-8301	2	Nut-Flange, NI
7	114-8323	2	Cable-Shift
8	104-6415	1	Spring-Return, Pedal
9	108-3138	1	Arm-Detent
10	251-307	1	Bearing-Ball
11	3296-42	1	Nut-Lock, NI
12	32151-101	2	E-Ring
13	323-14	2	Screw-HH
14	108-3141-03	1	Bracket-Shift
15	99-7952	1	Decal-Shifter
16	32105-15	4	Screw
17	12-3270	4	Screw
19	3290-378	1	Tie-Cable

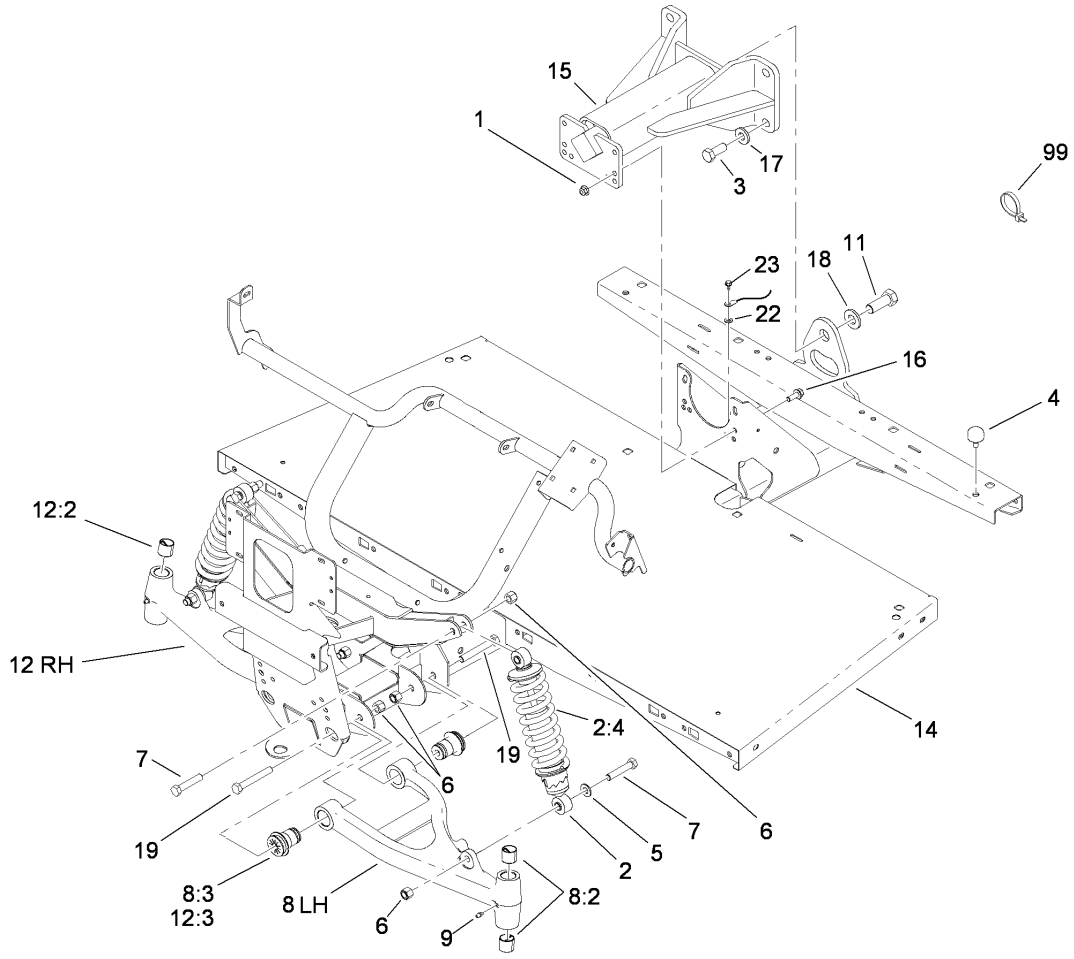

Front Frame Assembly

Ref	Part No.	Qty.	Description
1	104-8301	4	Nut-Flange, NI
2	112-2975	2	Shock/Spring ASM
2:4	112-3383	1	Spring
3	327-4	4	Screw-HH
4	87-2440	1	Bumper-Rubber
5	3256-26	2	Washer-Flat
6	3296-23	8	Nut-Lock, NI
7	325-10	4	Screw-HH
8	114-8313	1	LH A-Arm ASM
8:2	3-0348	2	Bushing
8:3	87-1450	2	Bushing-Flange
9	302-5	2	Fitting-Grease
11	328-24	1	Screw-HH
12	114-8314	1	RH A-Arm ASM
12:2	3-0348	2	Bushing
12:3	87-1450	2	Bushing-Flange
14	112-3340-03	1	Front Frame ASM
15	99-7700	1	Pivot Yoke ASM
16	3234-11	4	Screw-HHF
17	99-7667	4	Washer-Flat
18	87-3060	1	Washer-Hardened
19	325-14	4	Screw-HH
22	3254-16	1	Washer-Lock/Int
23	12-3270	1	Screw

Ref	Part No.	Qty.	Description
99	3290-379	12	Tie-Cable

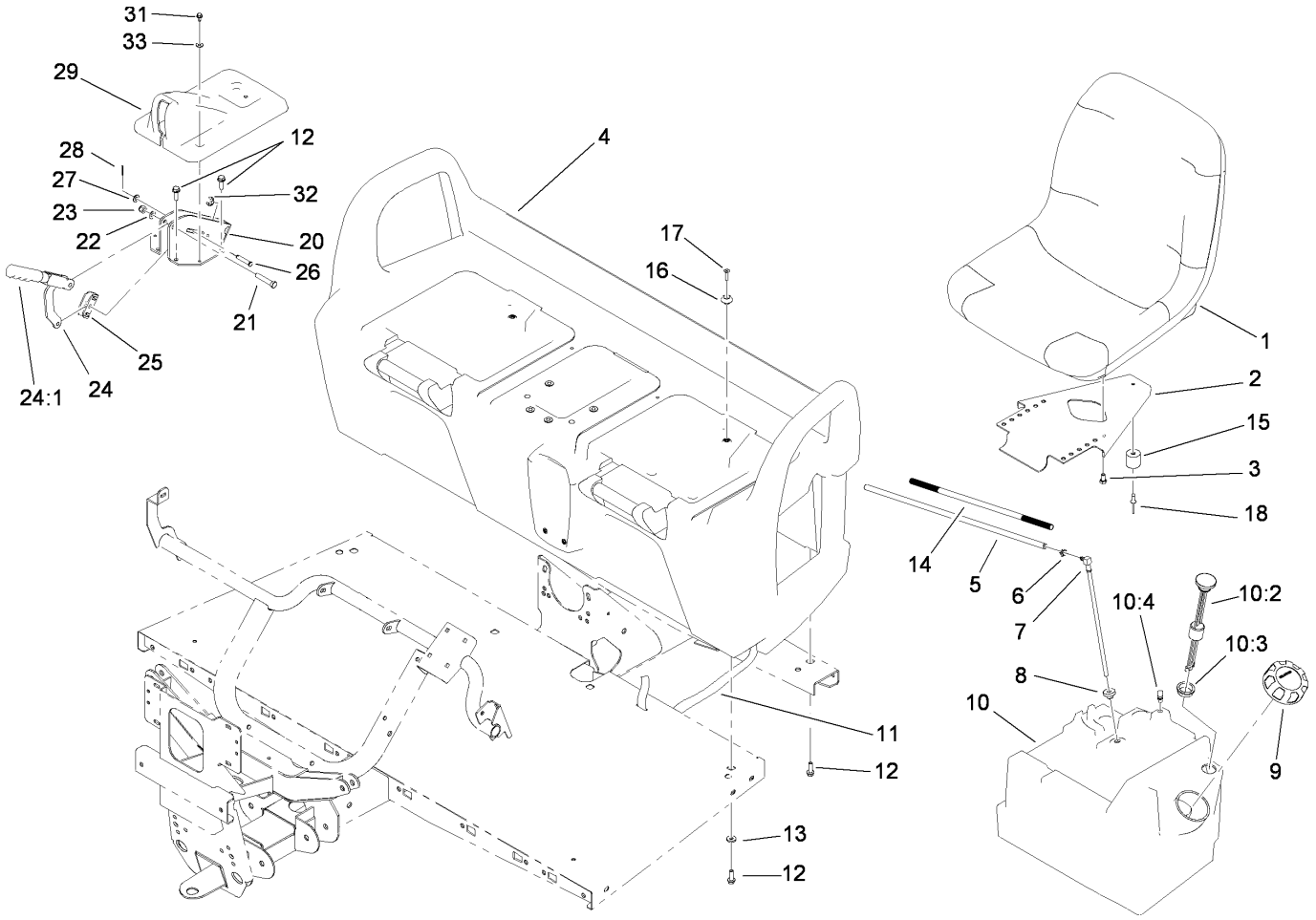

Seat Base Assembly

Ref	Part No.	Qty.	Description
1	112-2923	2	Seat ASM
2	99-7829	2	Bracket-Seat
3	33114-016	8	Screw-HH
4	104-6847	1	Seat Base ASM
5	110-4103	1	Hose-Fuel
6	2412-98	1	Clamp
7	99-7264	1	Pipe-Stand
8	46-6560	1	Bushing
9	95-4192	1	Unleaded Gas Cap ASM
10	99-7323	1	Fuel Tank ASM
10:2	99-7262	1	Gauge-Fuel
10:3	95-8972	1	Grommet
10:4	99-7267	1	Vent-Air
11	3339-175	1	Strapping-Web, 48 Inch
12	3234-17	12	Screw-HHF
13	88-7200	8	Washer-Flat
14	112-3337	1	Conduit-Line, Fuel
15	99-7830	2	Rubber Receptical ASM
16	99-7833	2	Post-Holding
17	32108-5	2	Screw-FH
18	3290-412	2	Rivet
20	104-6844-03	1	Support-Brake, Park
21	323-10	1	Screw-HH
22	3290-477	1	Washer-Curved

Ref	Part No.	Qty.	Description
23	3296-39	1	Nut-Lock, NI
24	104-6842	1	Lever-Brake, Park
24:1	106-7972	1	Grip-Handle
25	87-3480	1	Bracket-Equalizer, Cable
26	94-3829	1	Pin-Clevis
27	3256-23	1	Washer-Flat
28	3272-6	1	Pin-Cotter
29	104-7014	1	Cover-Brake, Parking
31	12-3270	2	Screw
32	32120-47	2	Ring-Retaining, External
33	3256-1	2	Washer-Flat

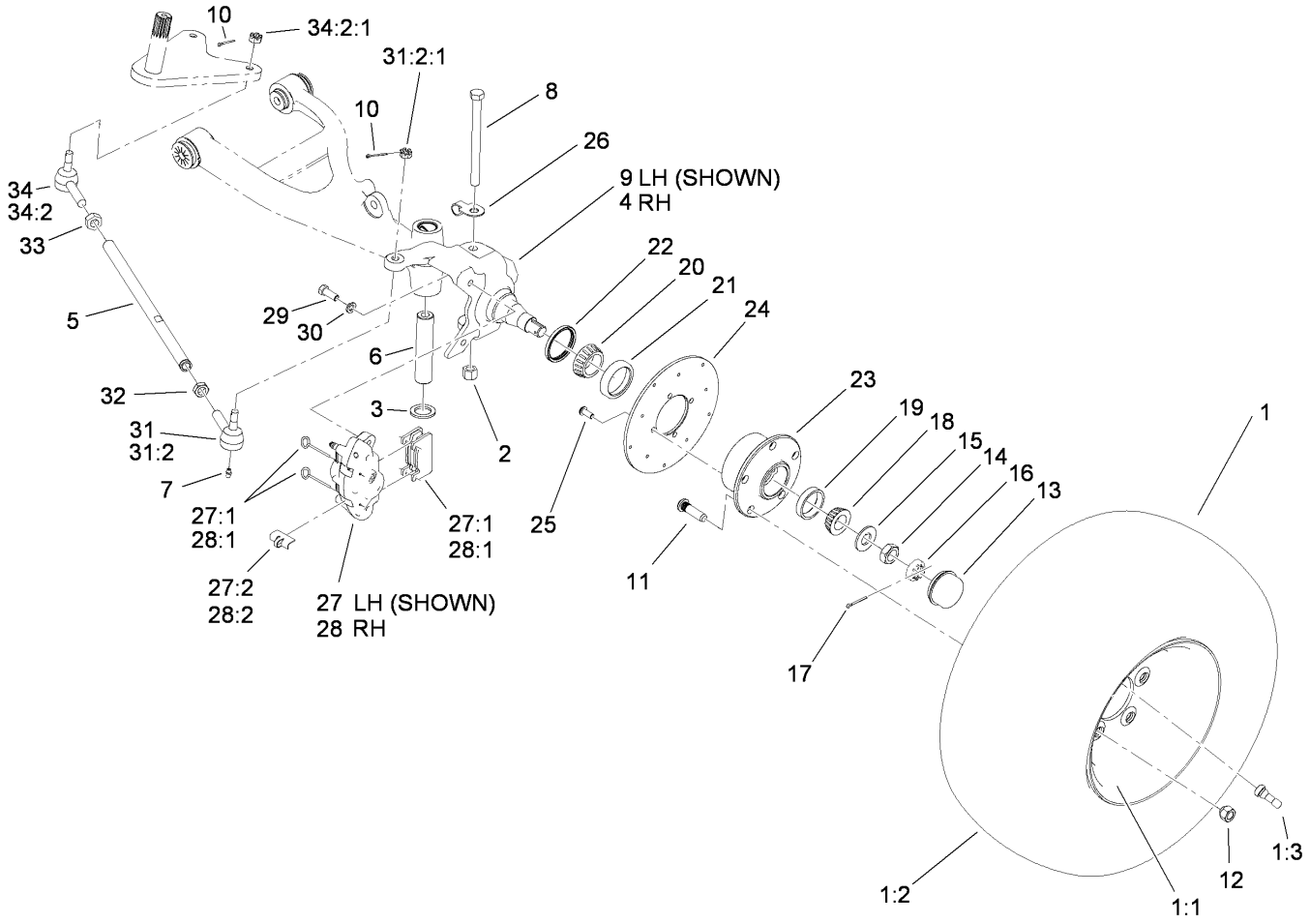

Front Tire, Spindle and Tie Rod Assembly

Ref	Part No.	Qty.	Description
1	104-7290	2	Tire And Wheel ASM
1:1	104-7288	1	Wheel
1:2	104-7289	1	Tire
1:3	232-27	1	Stem-Valve
2	3296-23	2	Nut-Lock, NI
3	256-115	2	Washer-Thrust
4	112-3167	1	Spindle-RH
5	115-7654	2	Tie Rod
6	99-7499	2	Sleeve-Kingpin
7	302-5	4	Fitting-Grease
8	325-20	2	Screw-HH
9	112-3166	1	Spindle-LH
10	3272-7	4	Pin-Cotter
11	10-6830	10	Stud-Type, Drive
12	242-50	10	Nut-Lug
13	241-119	2	Cap-Dust
14	3220-7	2	Nut-Jam
15	93-0309	2	Washer-Tab
16	93-0307	2	Nut-Lock, Retainer
17	3272-12	2	Pin-Cotter
18	254-94	2	Bearing-Cone, Tapered
19	254-72	2	Bearing-Cup, Tapered
20	254-106	2	Cone-Bearing, Tapered
21	254-107	2	Cup-Bearing, Tapered

Ref	Part No.	Qty.	Description
22	108-7019	2	Seal-Shaft
23	104-6809	2	Hub
24	104-6891	2	Rotor
25	3274-55	8	Screw-HSBH
26	112-3311	2	Clip-Hose
27	112-3150	1	Caliper-LH
27:1	107-0708	1	Friction Pad And Pin Kit
27:2	112-3152	1	Spring-Rattle, Anti
28	112-3151	1	Caliper-RH
28:1	107-0708	1	Friction Pad And Pin Kit
28:2	112-3152	1	Spring-Rattle, Anti
29	323-6	4	Screw-HH
30	3253-21	4	Washer-Lock
31	112771-03	2	LH Ball Joint ASM
❶31:2		1	Joint-Ball, LH
31:2:1	915031	1	Nut
32	3218-21	2	Nut-Jam
33	3220-11	2	Nut-Jam
34	112772-03	2	RH Ball Joint ASM
❶34:2		1	Joint-Ball, RH
34:2:1	915031	1	Nut

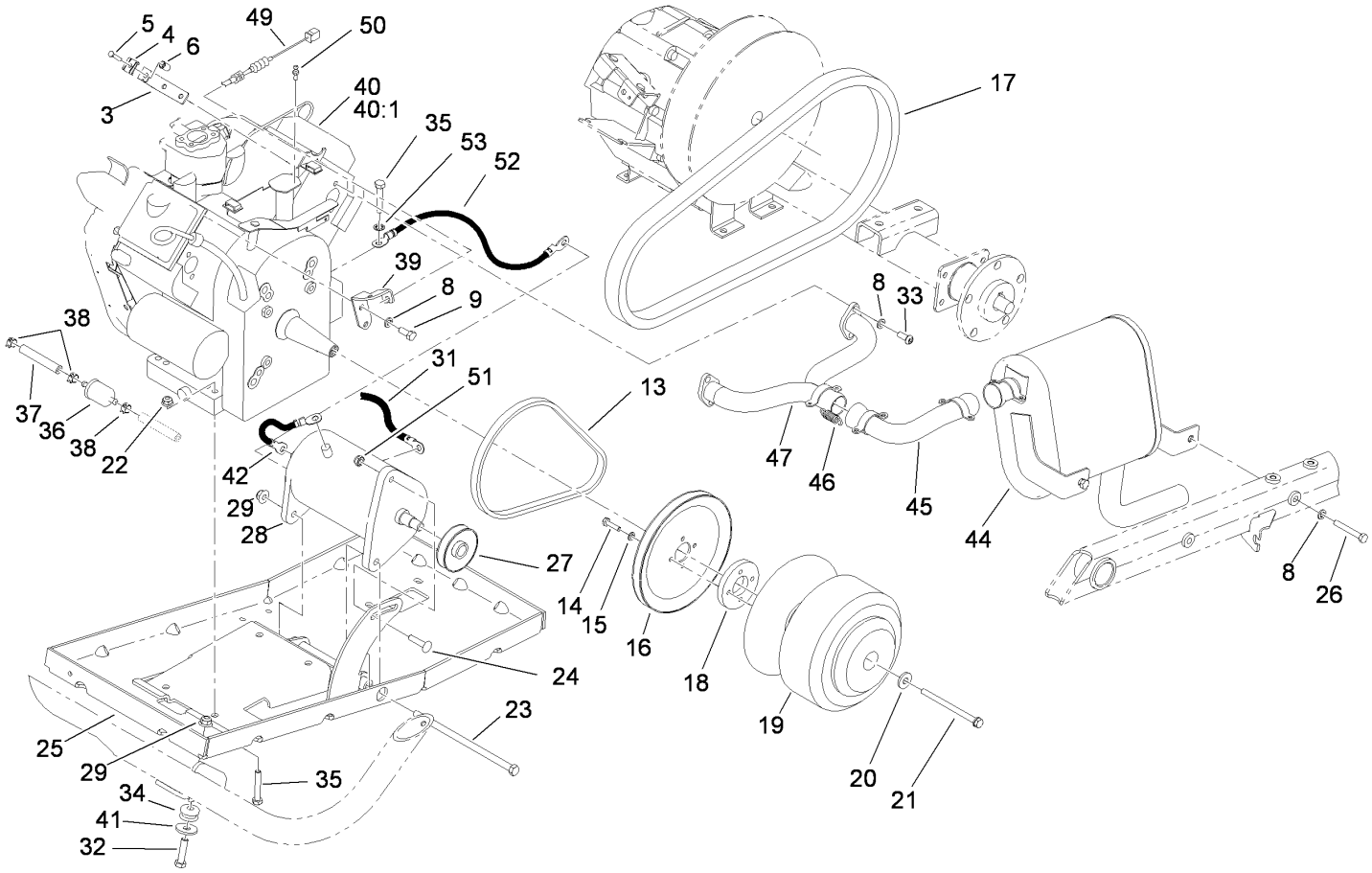

Engine and Clutch Assembly

Ref	Part No.	Qty.	Description
3	107-0319	1	Bracket-Cable
4	81-1690	1	Clamp-Cable
5	3290-432	1	Screw-HH
6	32148-14	1	Insert-Threaded
8	3253-4	8	Washer-Lock
9	66-3160	2	Screw-Cap
13	112-2911	1	Belt-Starter
14	321-6	4	Screw-HH
15	3253-3	4	Washer-Lock
16	99-7131	1	Pulley-Engine
17	112-2912	1	Belt-Drive
18	99-7064	1	Spacer-Starter
19	108-7013	1	Clutch-Drive
20	5-0838	1	Washer
21	99-7201	1	Screw-HH
22	104-8300	4	Nut-Flange, NI
23	323-30	1	Screw-HH
24	112-6950	1	Screw-CARR
25	112-3239-03	1	Engine Tray ASM
26	322-11	2	Screw-HH
27	99-7130	1	Pulley-Starter
28	99-7108	1	Generator-Starter
29	104-8301	3	Nut-Flange, NI
31	115-8109	1	Harness-Wire, Engine

Ref	Part No.	Qty.	Description
32	323-8	2	Screw-HH
33	3274-96	4	Screw-HSBH
34	63-9750	2	Mount
35	322-9	4	Screw-HH
36	94-2690	1	Filter-Fuel
37	114-3765	1	Hose-Fuel
38	2412-98	3	Clamp
39	115-2393	1	Bracket-Cable
40	112-2920	1	Engine-Briggs & Straton, 295440-0153-G1
40:1	117-2717	1	Engine-Block, Short
41	2844	2	Washer
42	99-7403	1	Cable-Negative
44	114-8335	1	Muffler
45	112-3128	1	Manifold-Engine
46	104-6478	4	Spring-Coupler, Exhaust
47	104-6476	1	Manifold-Engine
49	115-7612	1	Cable-Accelerator
50	99-7847	1	Ball-Stud
51	3296-69	1	Nut-Lock NI
52	94-2777	1	Wire-Ground
53	3254-2	1	Washer-Lock, Internal

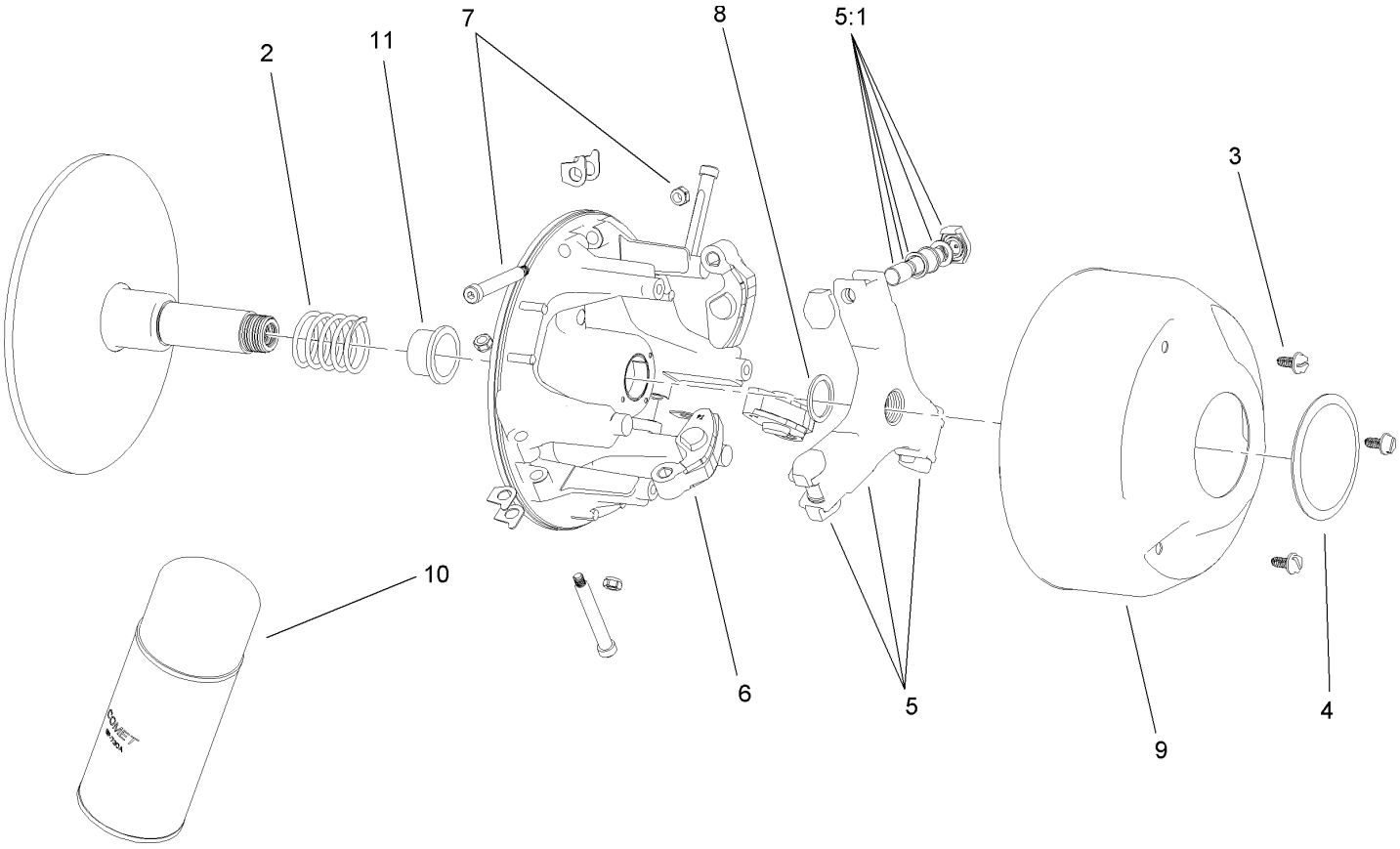

Drive Clutch Assembly No. 108-7013

Ref	Part No.	Qty.	Description
2	104-1686	1	Spring
3	3234-26	3	Screw
4	104-1690	1	Cap
5	108-3047	1	Spider ASM
5:1	110-2642	1	Spider Replacement Parts Kit
6	108-7008	1	Arm-Cam (Set Of 3)
7	104-4256	1	Pivot Bolt And Nut Kit
8	104-1687	1	Spacer
9	104-1691	1	Cover
10	104-7011	1	Lubricant-Dry
11	108-3048	1	Spacer-Clutch

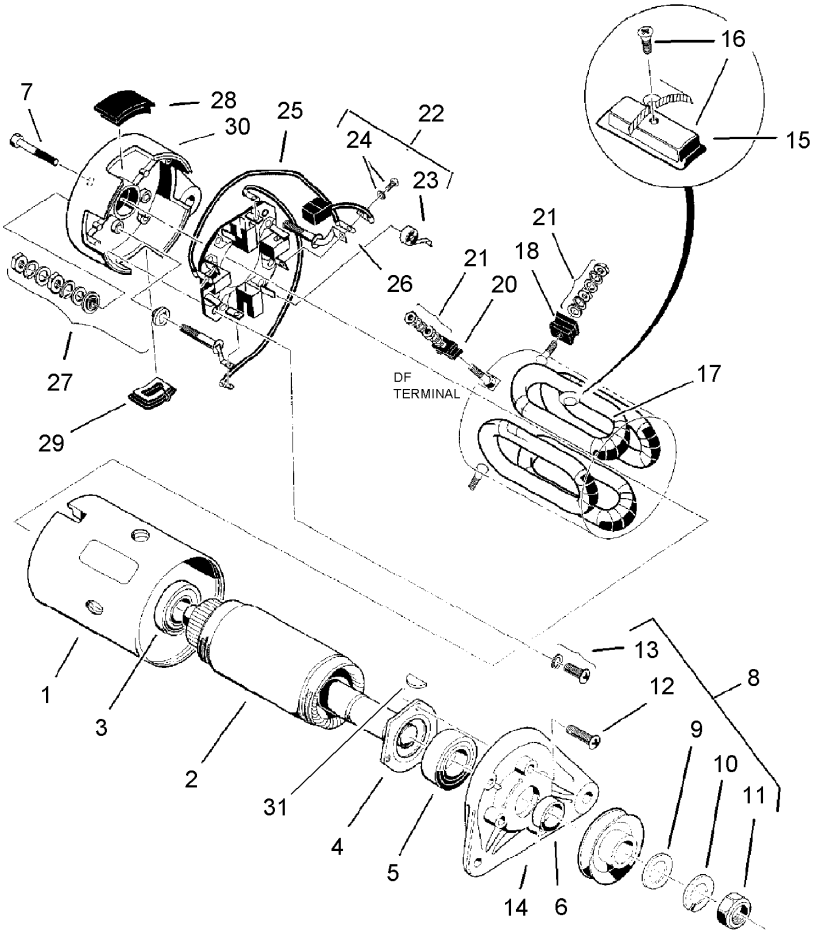

Starter Generator Assembly No. 99-7108

Ref	Part No.	Qty.	Description
❶1		1	Yoke
2	104-1210	1	Armature Kit
3	104-1211	1	Bearing-Ball, Rear
4	104-1212	1	Retainer
5	104-1213	1	Bearing-Ball, Front
6	104-1214	1	Spacer
7	104-1215	2	Bolt
❶8		1	Nut And Screw Set
9	104-1216	1	Washer-Plain
10	104-1217	1	Washer-Spring
11	104-1218	1	Nut-Hex
❶12		3	Screw-Flange
13	104-1219	2	Set-Screw
14	104-1220	1	Bracket-Front
❶15		4	Pole
16	104-1221	1	Set-Pole And Screw
17	104-1222	1	Field Stator Coil ASM
❶18		2	F Mold
❶20		1	Df Mold
21	104-1224	1	Nut And Washer Set
22	104-1225	1	Brush Holder Kit
23	104-1226	4	Spring-Brush
24	104-1227	1	Brush And Screw Set
❶25		2	Brush Connector ASM

Ref	Part No.	Qty.	Description
❶26		2	A Terminal ASM
27	104-1228	2	Screw And Mold ASM
❶28		1	Cover Set
❶29		1	Cover B
❶30		1	Bracket-Rear
31	3257-3	1	Key-Woodruff

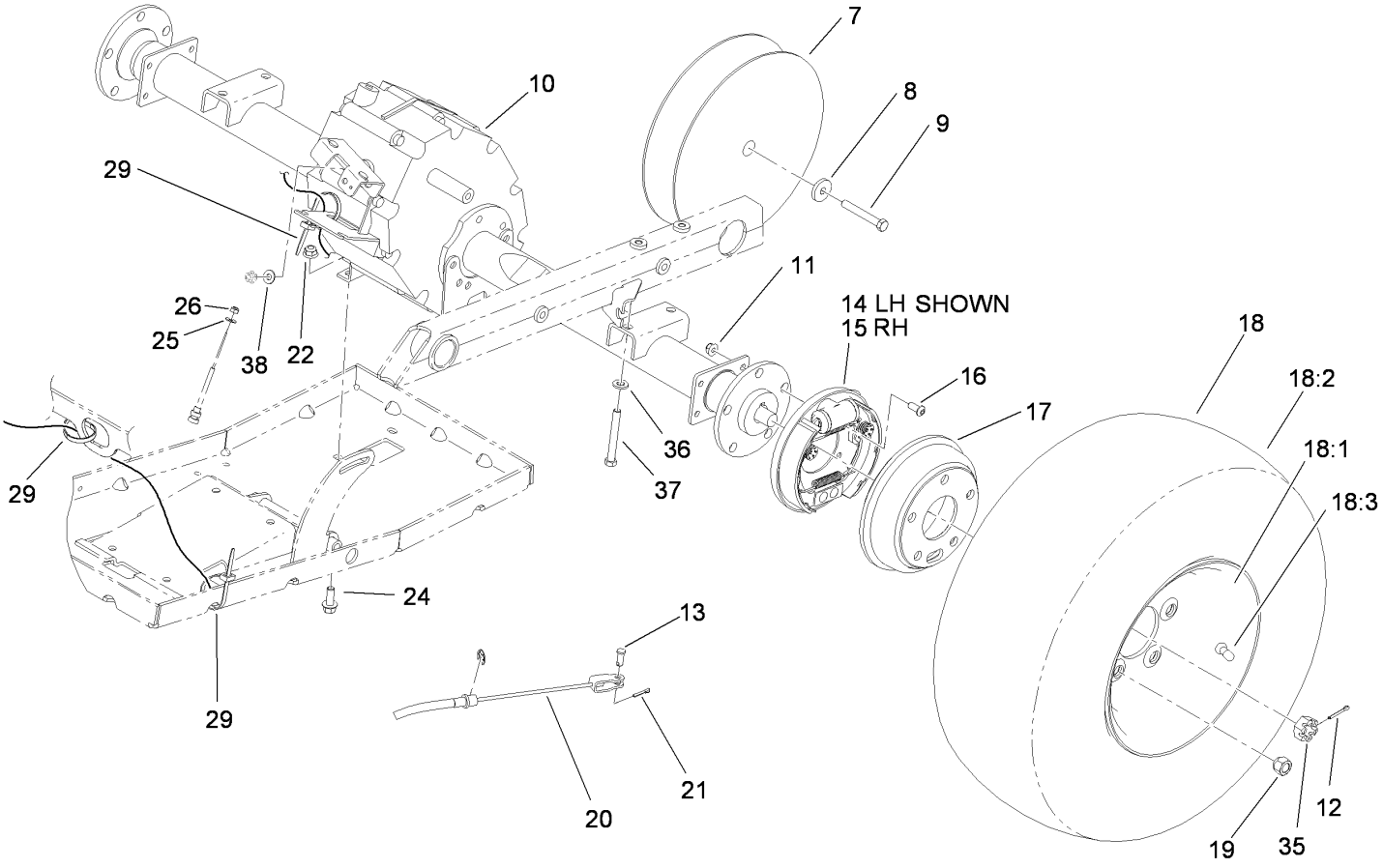

Rear Tire and Transaxle Assembly

Ref	Part No.	Qty.	Description
7	99-7104	1	Clutch-Driven
8	104-6563	1	Washer-Stepped
9	104-6564	1	Screw-HH
10	115-2301	1	Transaxle
11	104-8300	8	Nut-Flange, NI
12	3272-12	2	Pin-Cotter
13	283-62	2	Pin-Clevis
14	114-8332	1	LH Brake ASM
15	114-8331	1	RH Brake ASM
16	3274-55	8	Screw-HSBH
17	104-6500	2	Drum-Brake
18	104-7282	2	Tire And Wheel ASM
18:1	104-7279	1	Wheel
18:2	104-7281	1	Tire
18:3	232-27	1	Stem-Valve
19	242-50	10	Nut-Lug
20	112-3309	2	Cable-Brake
21	3272-10	2	Pin-Cotter
22	104-8301	4	Nut-Flange, NI
24	3234-11	4	Screw-HHF
25	3256-49	2	Washer-Flat
26	3296-2	2	Nut-Lock
29	3290-378	3	Tie-Cable
35	104-1656	2	Nut-Castle

Ref	Part No.	Qty.	Description
36	100-4852	4	Washer-Hardened
37	323-14	4	Screw-HH
38	87-8640	1	Washer-Flat

Transaxle Assembly No. 115-2301

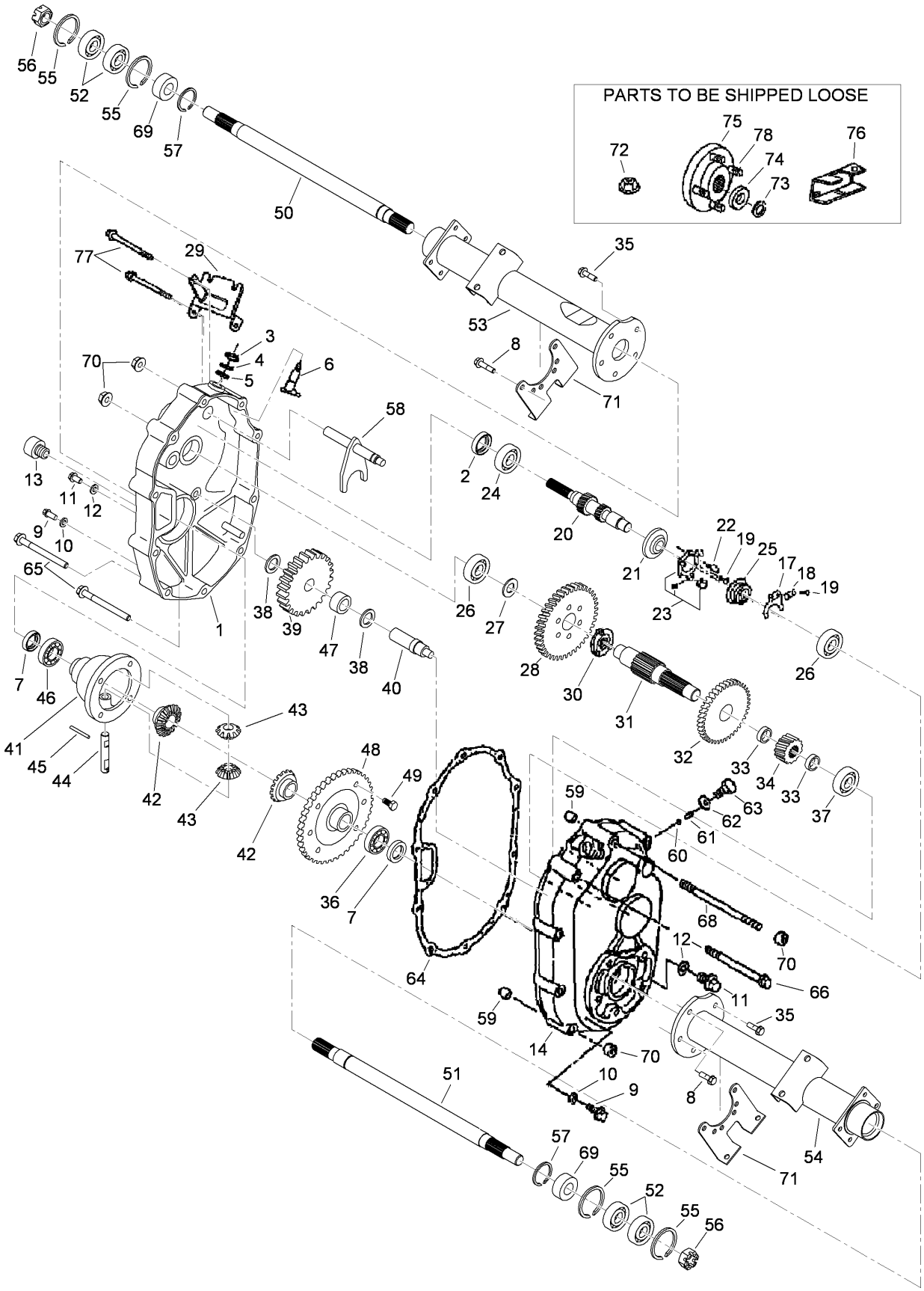

Transaxle Assembly No. 115-2301

Ref	Part No.	Qty.	Description
1	104-1601	1	Case-LH, Complete
2	104-1602	1	Seal-Oil
3	104-1603	1	Seal-Oil
4	104-1604	1	Ring-Snap
5	104-1605	1	Spacer
6	104-1606	1	Shaft-Selector
7	104-1607	2	Seal-Oil
8	104-1608	4	Bolt-Flange
9	104-1609	2	Plug-Check, Oil
10	104-1610	2	Gasket
11	104-1611	2	Plug-Drain, Oil
12	104-1612	2	Gasket
13	104-1613	1	Plug-Filler, Oil
14	104-1614	1	Case-Complete, RH
17	104-1617	1	Fork-Governor
18	104-1618	1	Stopper
19	104-1619	4	Screw And Washer ASM
20	104-7002	1	Shaft-Input, Complete
21	104-1621	1	Base-Governor
22	104-1622	1	Pin-Lock
23	104-1623	1	Unit-Plate, Governor
24	104-1624	1	Bearing-Ball
25	104-1625	1	Sleeve-Governor
26	104-1626	2	Bearing-Ball
27	104-1627	1	Spacer
28	104-1628	1	Gear
29	115-7672	1	Bracket-Wire, Change
30	104-1630	1	Clutch-Pin
31	104-1631	1	Shaft-Center
32	104-1632	1	Gear
33	104-1633	2	Collar
34	104-1634	1	Gear
35	104-1635	6	Bolt-Flange
36	104-1636	1	Bearing-Ball
37	104-1637	1	Bearing-Ball
38	104-1638	2	Spacer
39	104-1639	1	Gear
40	104-1640	1	Shaft-Counter
41	104-1641	1	Case-Differential
42	104-1642	2	Gear-Side, Differential
43	104-1643	2	Pinion-Differential
44	104-1644	1	Shaft-Differential
45	104-1645	1	Pin
46	104-1646	1	Bearing-Ball
47	104-1647	1	Bearing-Needle
48	104-1648	1	Gear
49	104-1649	6	Bolt
50	104-1650	1	Shaft-Axle, LH
51	104-1651	1	Shaft-Axle, RH
52	104-1652	4	Bearing-Ball
53	104-1653	1	Case-Axle, LH
54	104-1654	1	Case-Axle, RH

Ref	Part No.	Qty.	Description
55	104-1655	4	Ring-Snap
56	104-1656	2	Nut-Castle
57	104-1657	2	Ring-Snap
58	104-6870	1	Shaft-Shift, Complete
59	104-1659	2	Knock-Pipe
60	104-1660	1	Ball-Steel
61	104-1661	1	Spring
62	104-1662	1	Gasket
63	104-1663	1	Bolt
64	104-1664	1	Gasket
65	104-1665	6	Bolt-Flange
66	104-1666	1	Bolt-Flange
68	104-6866	1	Bolt
69	104-6867	2	Collar
70	33004-00	11	Nut-HF
71	104-1671	2	Bracket-Axle
72	104-1672	1	Nut-Lock
73	104-1673	2	Washer-Spring
74	104-1674	2	Washer
75	104-1675	2	Hub
76	112-3287	1	Lever-Select
77	104-6869	2	Bolt-Flange
78	104-8649	10	Stud

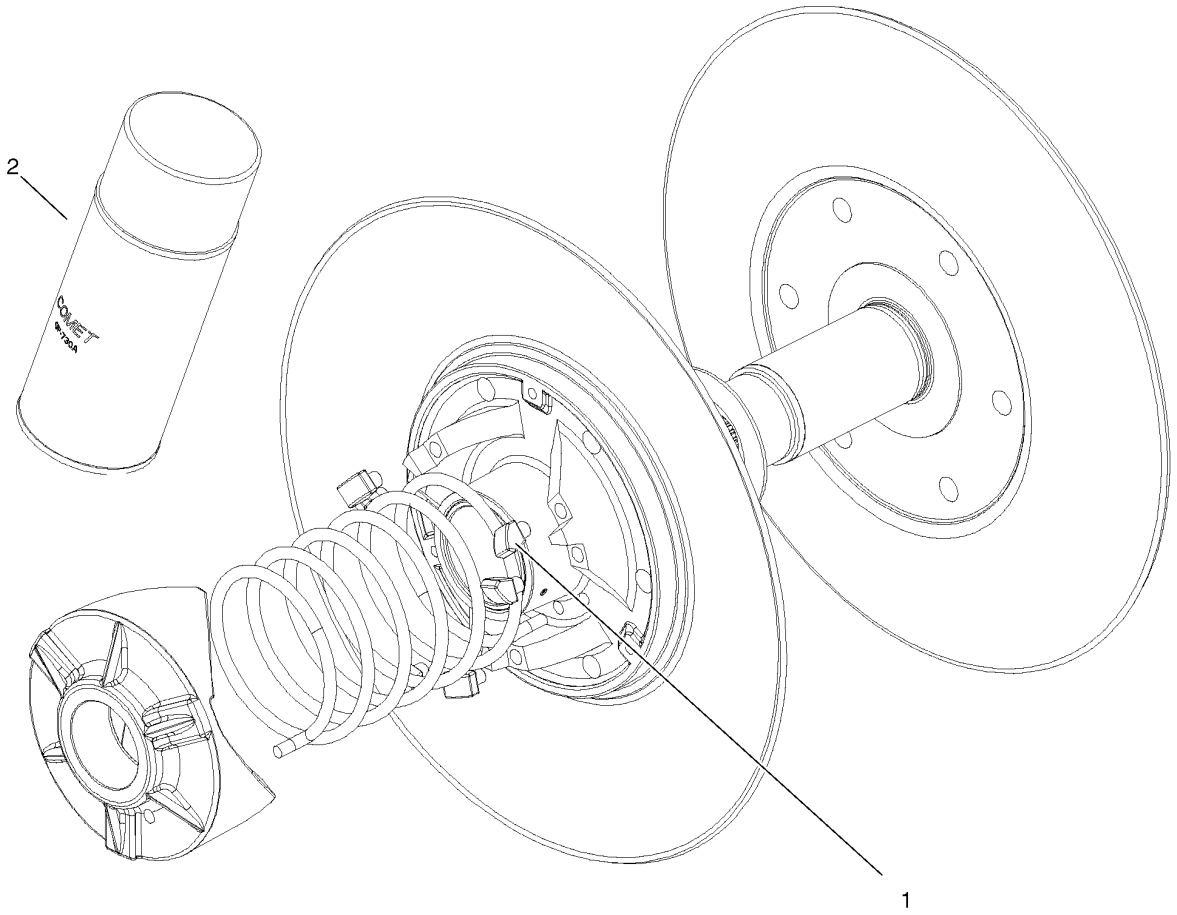

Driven Clutch Assembly No. 99-7104

Ref	Part No.	Qty.	Description
1	104-4257	1	Button Kit
2	104-7011	1	Lubricant-Dry

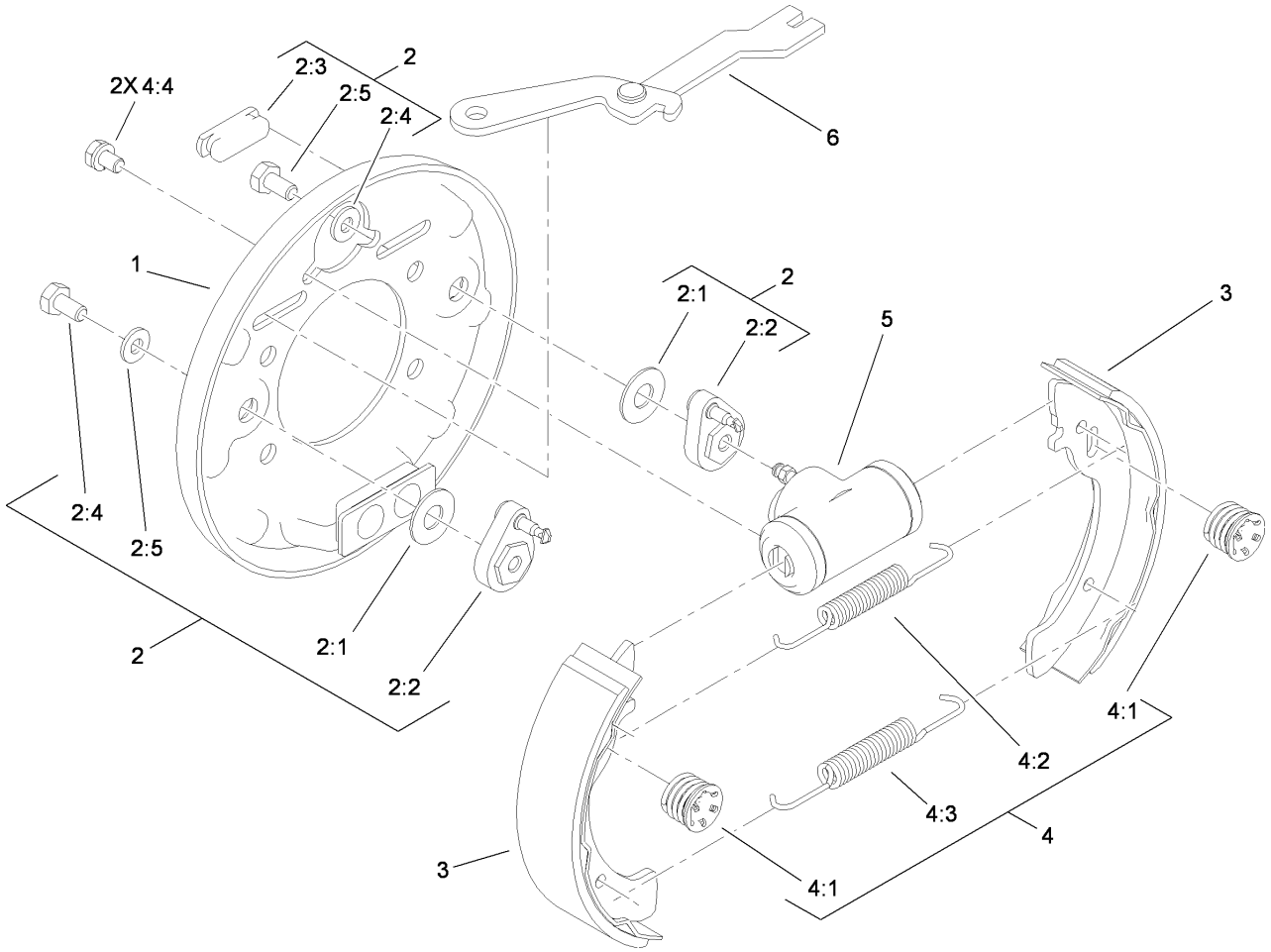

LH Rear Brake Assembly No. 114-8332

Ref	Part No.	Qty.	Description
1	100-8586	1	Backing Plate ASM
2	104-6820	1	Adjuster Kit
2:1	100-8585	2	Washer-Bellville
2:2	100-8588	2	Adjuster Lever ASM
2:3	100-8584	2	Cover-Dust
❶2:4		2	Washer
❶2:5		2	Bolt
3	104-6818	4	Shoe And Lining Kit
4	104-6819	1	Hardware Kit
4:1	100-8583	2	Shoe Hold Down Spring ASM
4:2	100-8581	2	Spring-Upper
4:3	100-8582	2	Spring-Lower
❶4:4		2	Bolt And Washer
5	114-8333	1	Wheel Cylinder ASM
6	104-6825	1	LH Park Brake Lever ASM

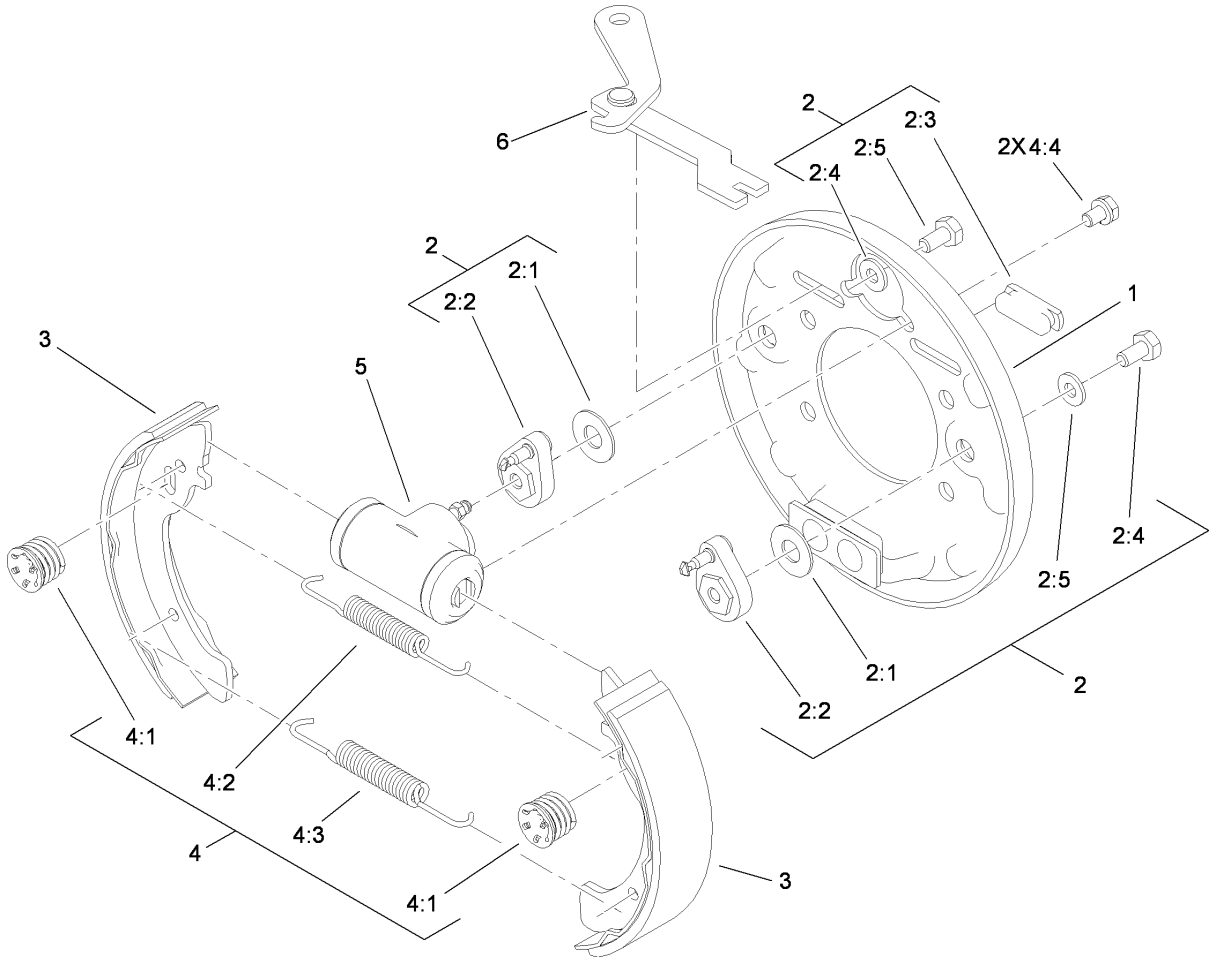

RH Rear Brake Assembly No. 114-8331

Ref	Part No.	Qty.	Description
1	100-8586	1	Backing Plate ASM
2	104-6820	1	Adjuster Kit
2:1	100-8585	2	Washer-Bellville
2:2	100-8588	2	Adjuster Lever ASM
2:3	100-8584	2	Cover-Dust
❶2:4		2	Washer
❶2:5		2	Bolt
3	104-6818	4	Shoe And Lining Kit
4	104-6819	1	Hardware Kit
4:1	100-8583	2	Shoe Hold Down Spring ASM
4:2	100-8581	2	Spring-Upper
4:3	100-8582	2	Spring-Lower
❶4:4		2	Bolt And Washer
5	114-8333	1	Wheel Cylinder ASM
6	104-6826	1	RH Park Brake Lever ASM

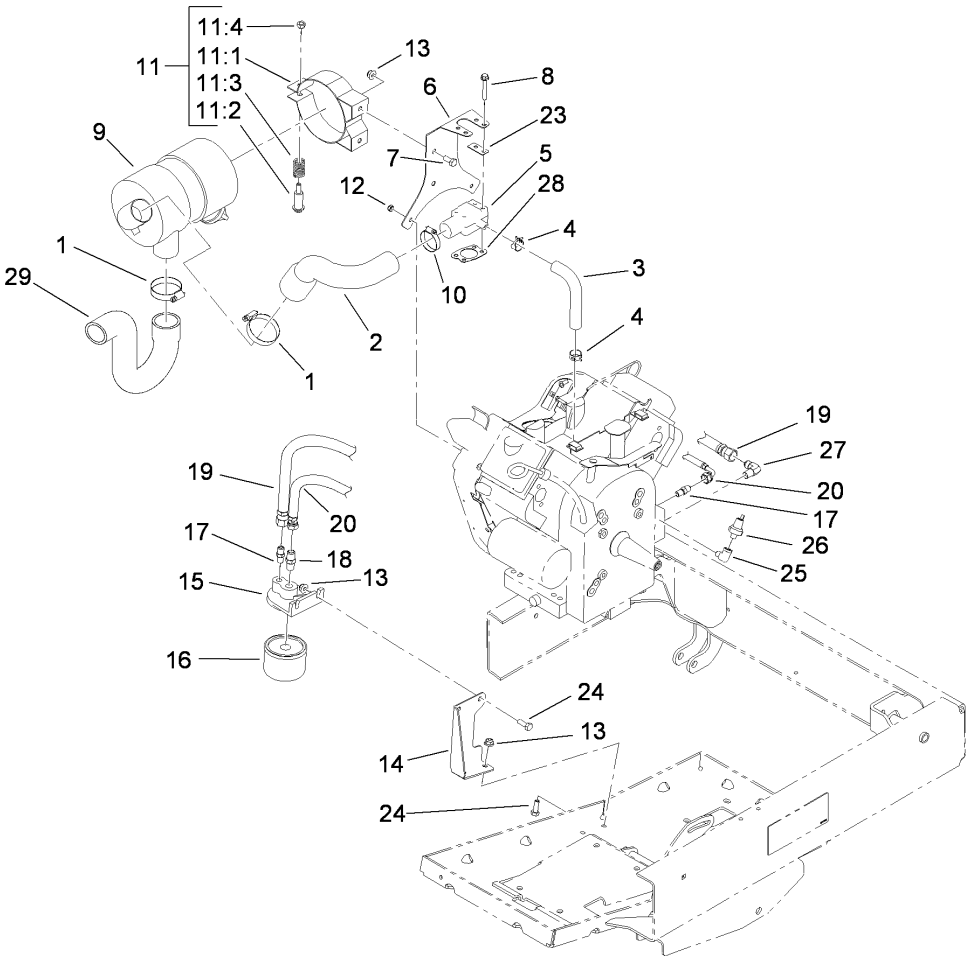

Oil Filter and Air Cleaner Assembly

Ref	Part No.	Qty.	Description
1	2412-130	2	Clamp-Hose
2	112-3227	1	Hose-Intake
3	112-6461	1	Hose-Adapter, Carborator
4	2412-143	2	Clamp-Hose
5	108-2829	1	Adaptor-Carburetor
6	112-3226-03	1	Bracket-Cleaner, Air
7	322-3	2	Screw-HH
8	33103-045	4	Screw-HHF
9	99-7120	1	Air Cleaner ASM
10	2412-3	1	Clamp-Hose
11	93-2191	1	Band-Mounting, Air Cleaner
❶11:1		1	Clamp ASM
11:2	94-3653	1	Bolt
11:3	94-3654	1	Spring
11:4	48-9510	1	Nut
12	33023-00	2	Nut-Lock
13	104-8300	6	Nut-Flange, NI
14	112-3240-03	1	Bracket-Filter, Oil
15	115-2314	1	Adapter-Filter, Oil
16	107-7817	1	Filter-Oil
17	112-3282	2	Fitting-Straight
18	112-3283	1	Fitting-Straight
19	112-3284	1	HYD Hose ASM
20	112-3285	1	HYD Hose ASM

Ref	Part No.	Qty.	Description
23	108-8427	2	Gasket-Carburetor
24	322-4	4	Screw-HH
25	2811-7	1	Elbow
26	115-2316	1	Switch-Pressure
27	115-2317	1	Fitting-Elbow
28	110-8158	1	Gasket-Adaptor
29	115-7623	1	Hose-Intake

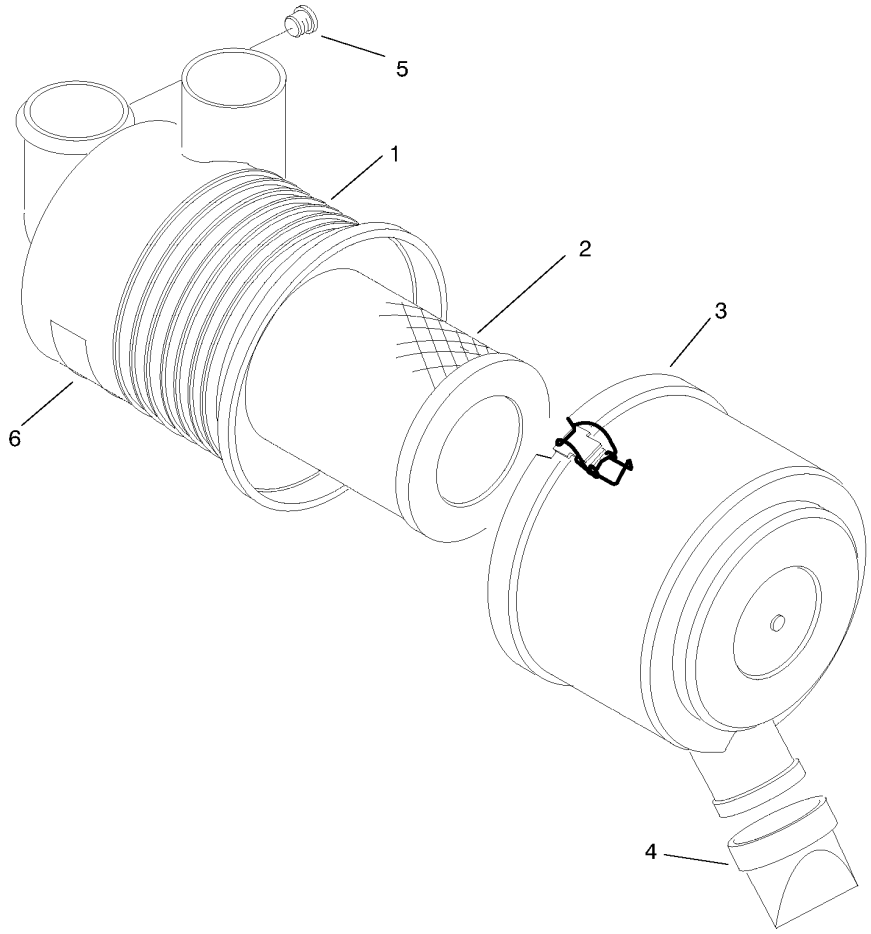

Air Cleaner Assembly No. 99-7120

Ref	Part No.	Qty.	Description
❶1		1	Body
2	108-3811	1	Filter-Air
3	94-3652	1	Cover ASM
4	87-9400	1	Valve-Vacuator
❶5		1	Plug
❶6		1	Marking

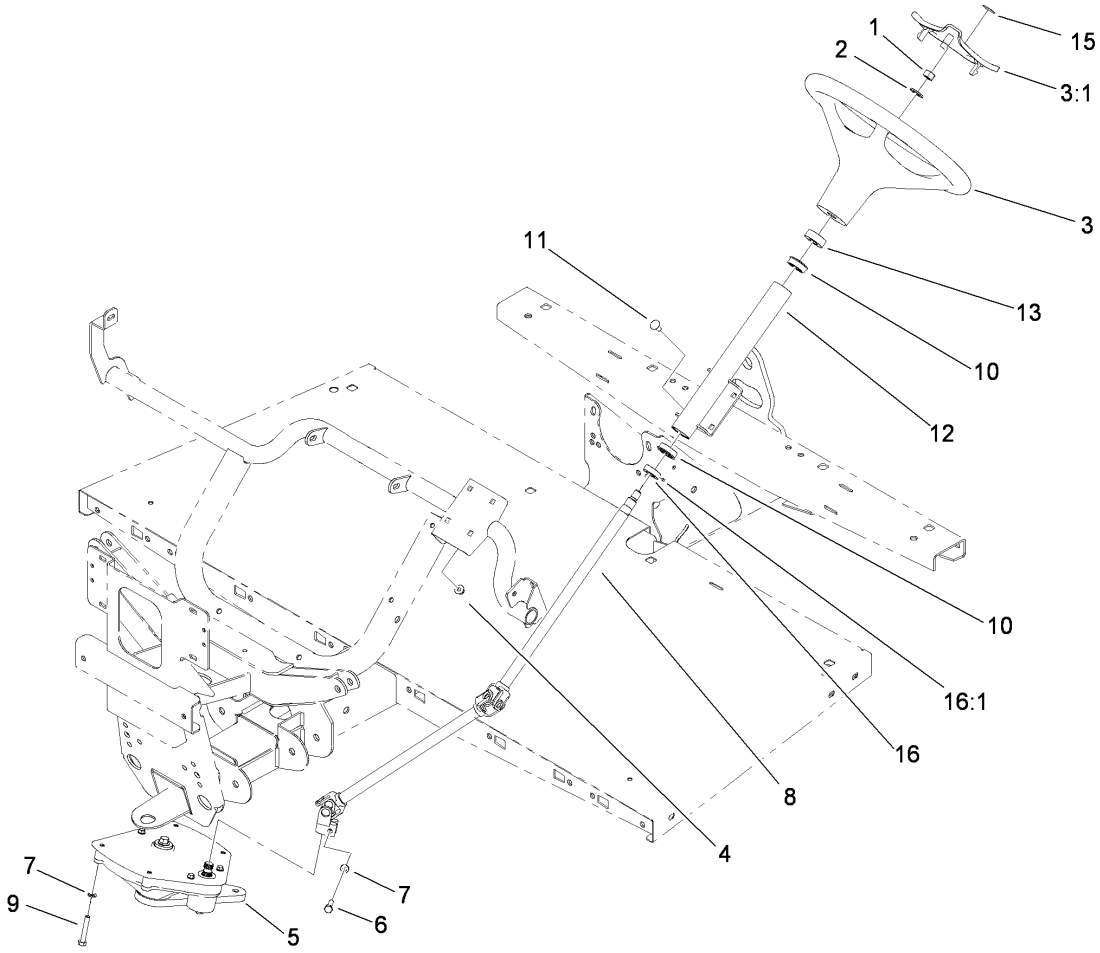

Upper Steering Assembly

Ref	Part No.	Qty.	Description
1	110-8815	1	Nut-Hex
2	3256-26	1	Washer-Flat
3	98-1471	1	Wheel-Steering
3:1	98-1468	1	Cover-Wheel, Steering
4	104-8300	4	Nut-Flange, NI
5	112-3130	1	Steering Box ASM
6	48-7730	1	Screw-HH
7	3253-4	5	Washer-Lock
8	112-3355	1	Steering Shaft
9	112-3305	4	Screw-HH
10	112-3262	2	Bearing
11	3230-1	4	Bolt-CARR
12	112-3264-03	1	Column ASM
13	21-9260	1	Cover-Dust
15	98-1459	1	Decal
16	111383	1	Collar
16:1	3245-32	1	Screw-HSH

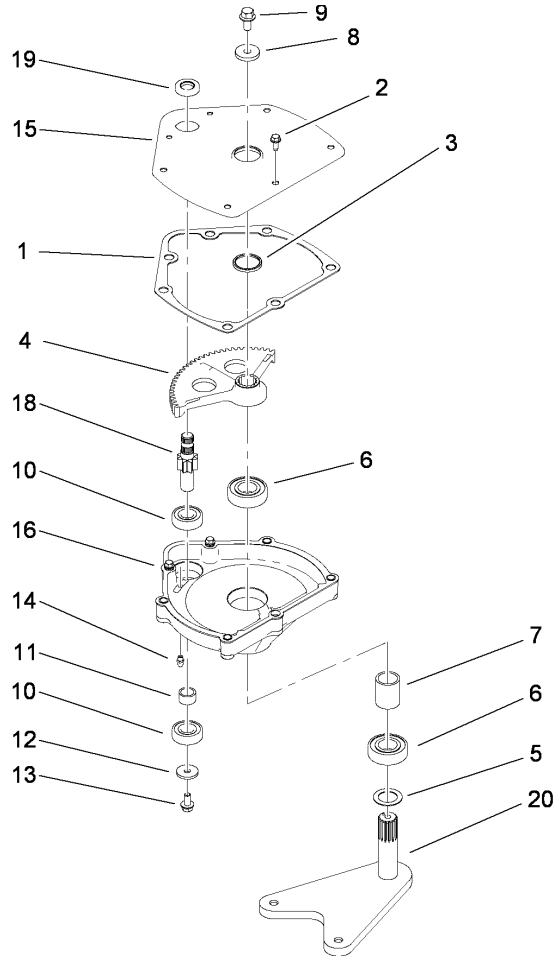

Steering Box Assembly No. 112-3130

Ref	Part No.	Qty.	Description
1	94-2135	1	Gasket
2	32144-10	3	Screw-HWH
3	103118	1	Seal
4	99-7843	1	Sector-Gear
5	3256-42	1	Washer-Flat
6	251-82	2	Bearing-Ball
7	112-2917	1	Spacer
8	104-6563	1	Washer-Stepped
9	104-7156	1	Screw-HHF
10	38-7820	2	Bearing-Ball
11	94-2217	1	Spacer-Shaft, Input
12	1-613235	1	Washer
13	98-3498	1	Screw-HH
14	302-5	1	Fitting-Grease
15	112-2918-03	1	Cover-Housing, Steering
16	114-8309	1	Housing-Steering
18	115-7726	1	Gear-Pinion
19	99-7657	1	Seal-Oil
20	112-3096-03	1	Pitman Arm ASM

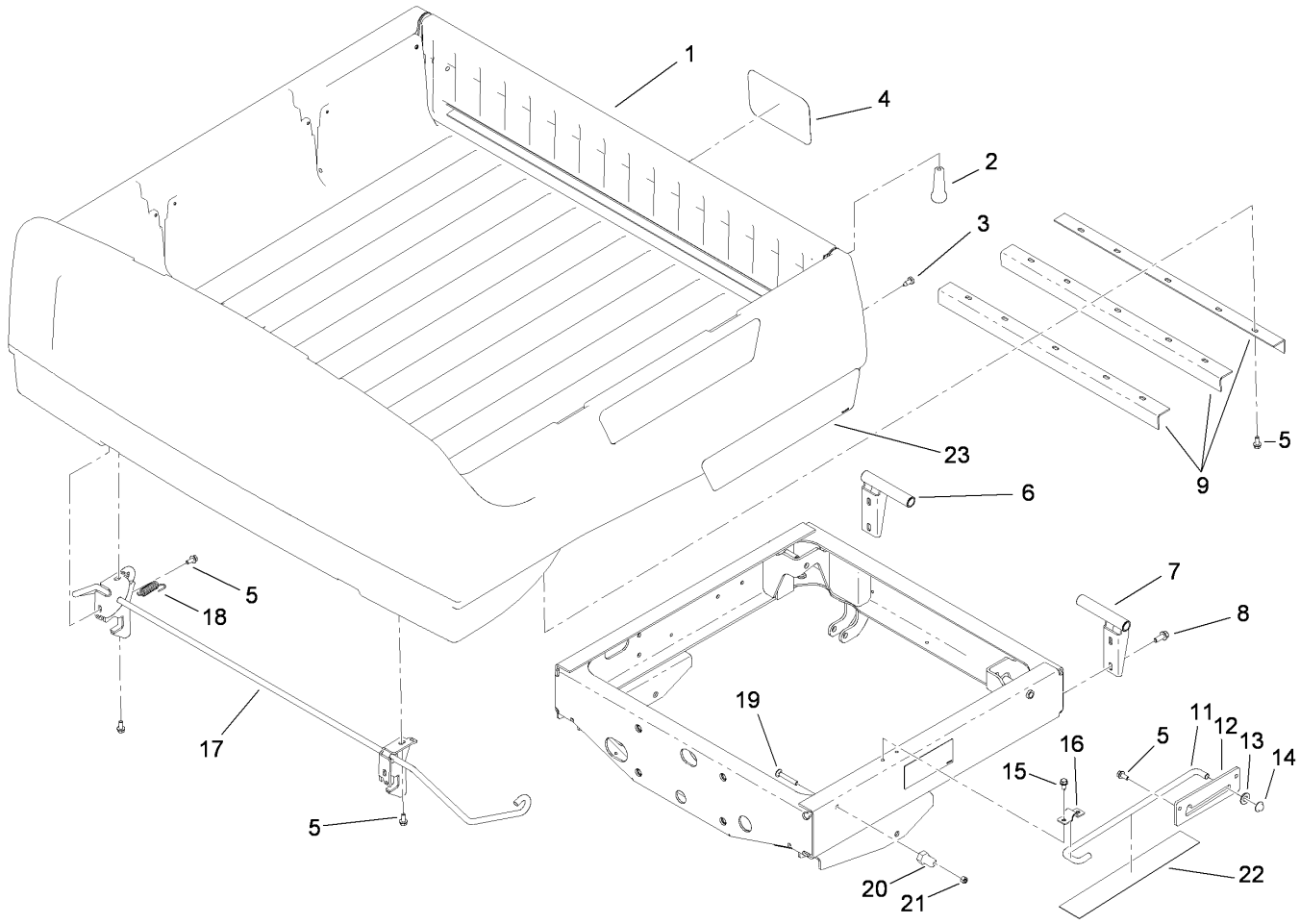

Box and Tailgate Installation Assembly

Ref	Part No.	Qty.	Description
❶1		1	Box And Tailgate ASM
2	99-7984	2	Knob-Soft Grip, Push-On
3	87-8460	2	Bumper-Rubber
4	104-7213	1	Decal
5	3234-5	21	Screw-HHF
6	99-7309-03	1	RH Pivot Bracket ASM
7	99-7308-03	1	LH Pivot Bracket ASM
8	3234-11	4	Screw-HHF
9	99-7864-03	3	Brace-Box
11	99-7895	1	Rod-Prop
12	99-7894	1	Bracket-Rod, Prop
13	3256-26	1	Washer-Flat
14	32112-14	1	Nut-Push
15	32104-32	2	Screw-HWH
16	99-7896	1	Bracket-U, Prop Rod
17	115-2385	1	Rod-Latch
18	5-7290	2	Spring-Tension
19	3230-7	2	Screw-CARR
20	104-7248	2	Pin-Latch
21	3296-29	2	Nut-Lock, NI
22	104-6859	1	Shield-Heat
23	115-2414	2	Decal

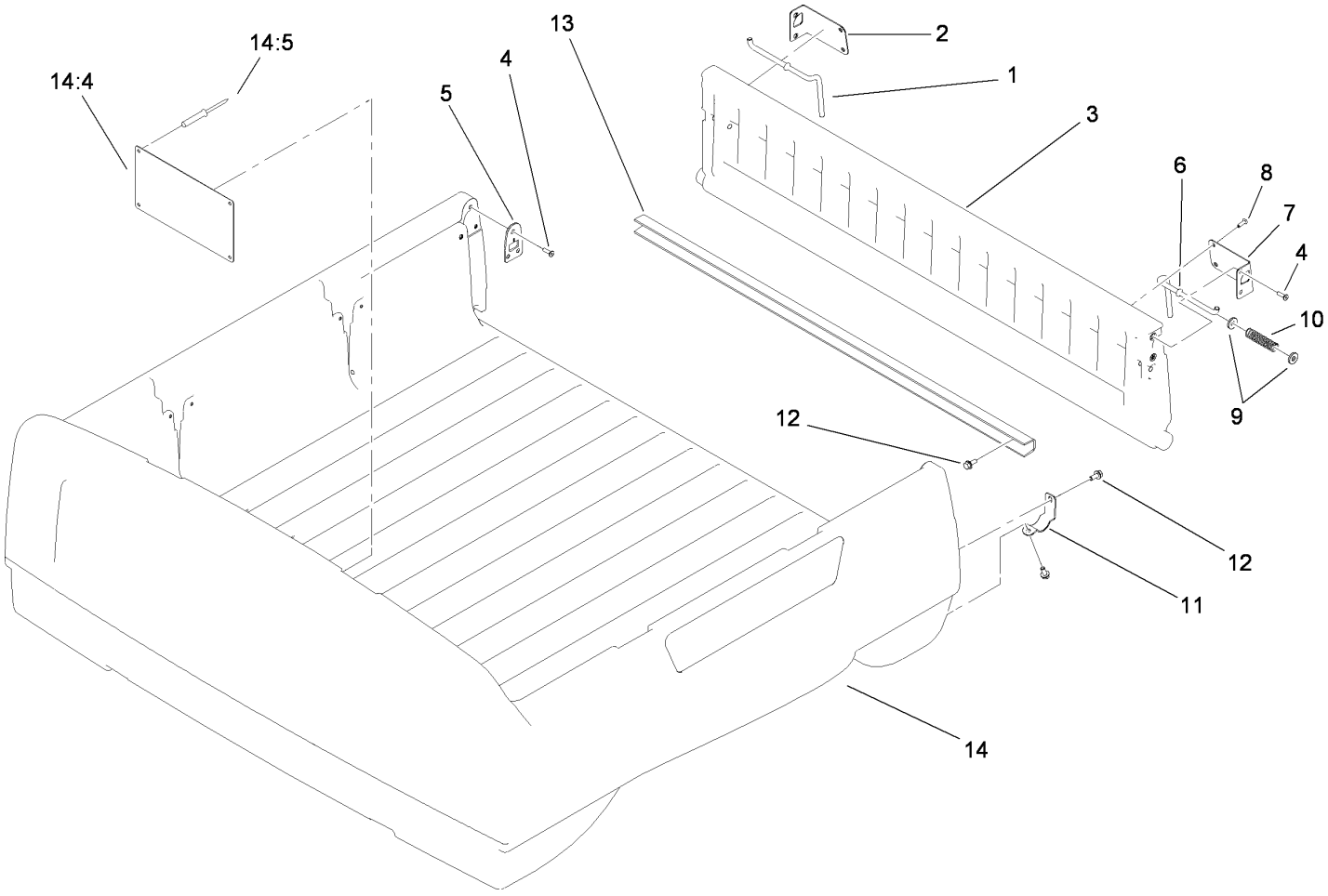

Box and Tailgate Assembly

Ref	Part No.	Qty.	Description
1	99-7860	1	Rod-Latch, Right
2	99-7858	1	Bracket-Tailgate Latch, Right
3	115-7640	1	Tailgate ASM
4	99-7334	10	Screw
5	115-7676	2	Striker Plate ASM
6	99-7859	1	Rod-Latch, Left
7	99-7857	1	Bracket-Tailgate Latch, Left
8	99-7335	4	Screw
9	99-7861	4	Washer-Latch
10	61-8880	2	Spring
11	99-7286	2	Bracket-Pivot, Tailgate
12	3234-5	10	Screw-HHF
13	99-7867	1	Channel-Tailgate
14	115-7638	1	Box ASM
14:4	99-7954	1	Decal-No Riders
14:5	3290-415	4	Rivet

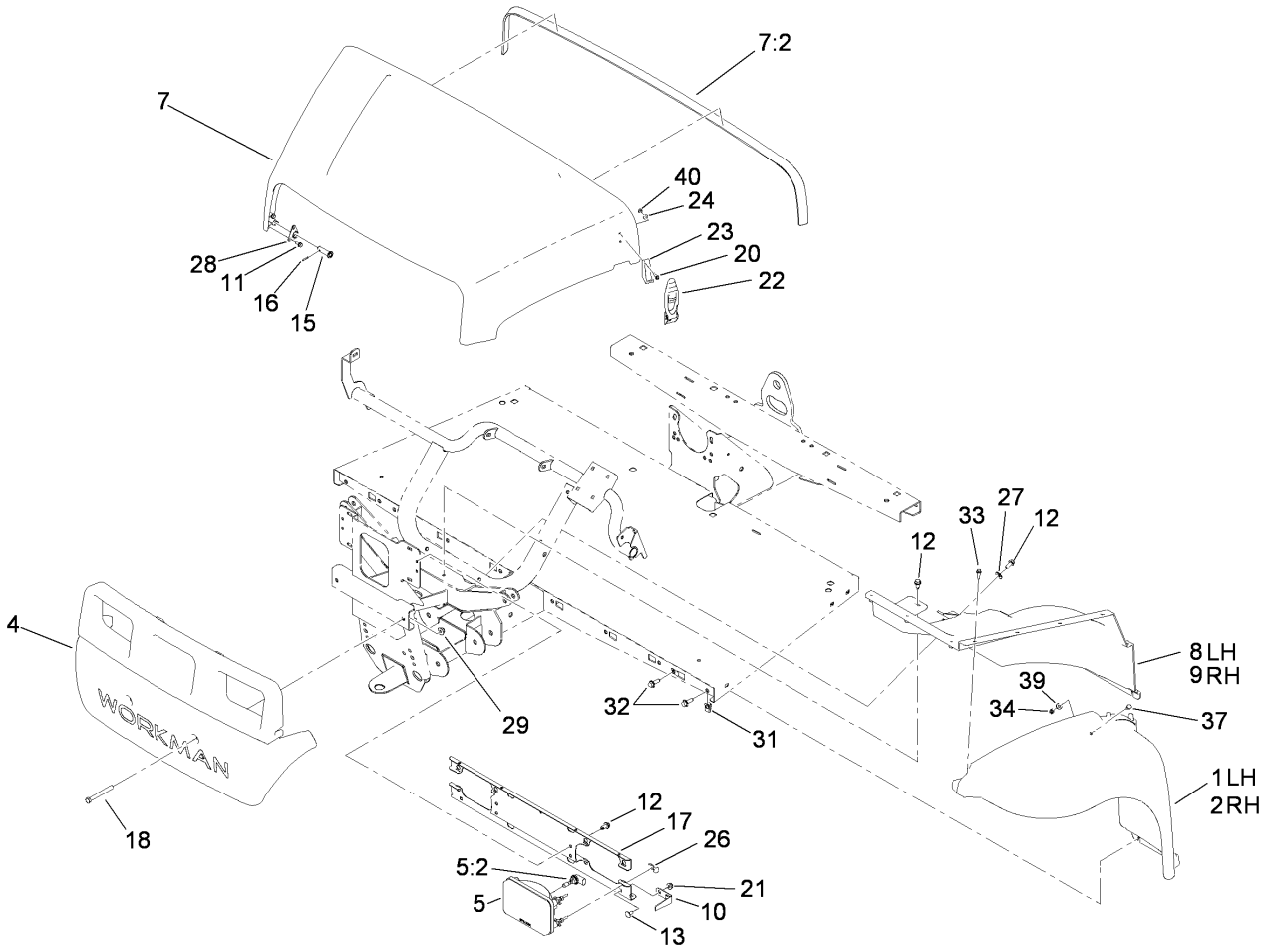

Hood and Fender Assembly

Ref	Part No.	Qty.	Description
1	112-3371	1	Fender-LH
2	112-3370	1	Fender-RH
4	112-3365	1	Bumper
5	114-8322	2	Headlight
5:2	115-2395	1	Light Bulb ASM
7	115-7636	1	Hood ASM
7:2	115-7635	1	Seal-Foam
8	112-3369	1	Well-Fender, LH
9	112-3368	1	Well-Fender, RH
10	112-3373	2	Keeper-Pivot, Hood
11	46-8093	6	Screw-Plastite
12	32104-32	8	Screw-HWH
13	3230-18	2	Screw-CARR
15	112-2916	2	Pin-Pivot, Hood
16	32121-50	2	Pin-Spring
17	112-2915-03	1	Bracket-Light, Head
18	115-7660	2	Screw-HHF
20	32105-13	4	Screw-HWH
21	104-8300	2	Nut-Flange, NI
22	115-2416	2	Latch-Rubber
23	103-2897	2	Latch-Catch
24	3256-14	4	Washer-Flat
26	115-2408	6	Clip-Speed
27	3256-71	2	Washer-Flat

Ref	Part No.	Qty.	Description
28	112-3308	2	Retainer-Pin
29	104-8301	2	Nut-Flange, NI
31	112-3306	10	Nut
32	3234-29	10	Screw-HHF
33	46-8091	20	Screw-HWH
34	3296-42	2	Nut-Lock, NI
37	321-39	2	Screw-HH
39	3256-22	2	Washer-Flat
40	3296-2	4	Nut-Lock

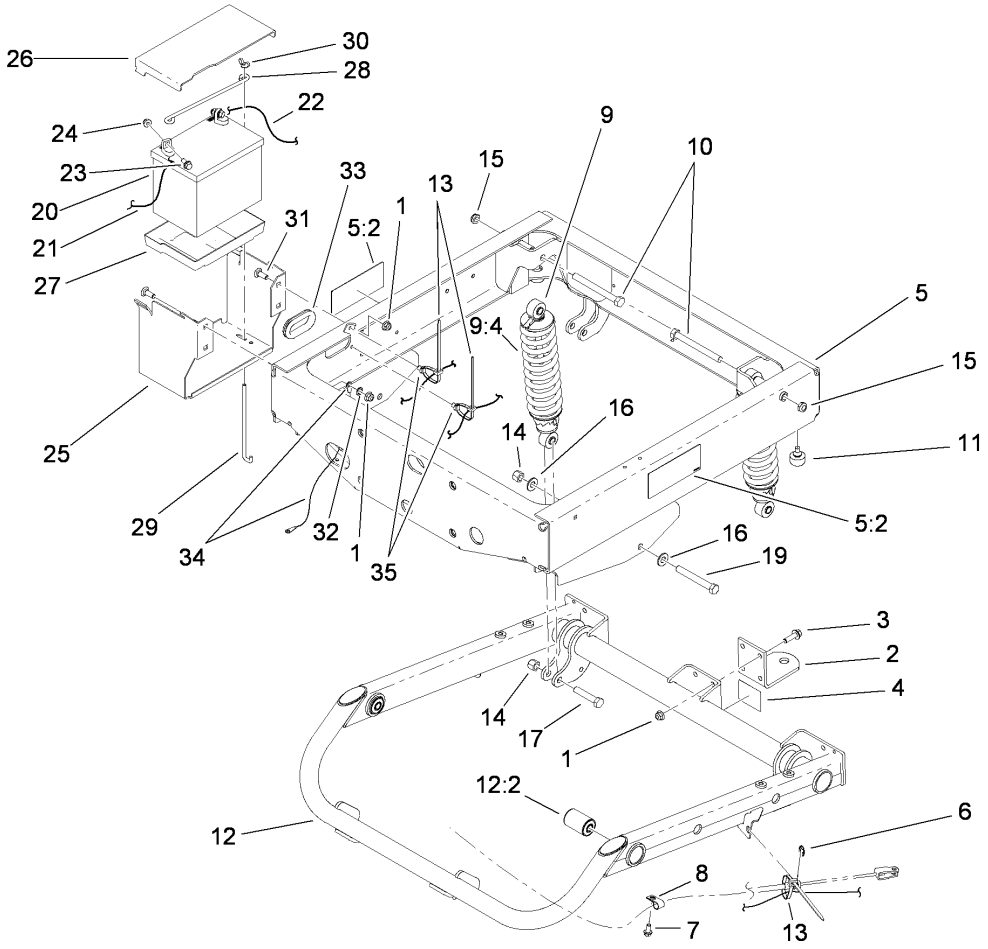

Frame Assembly

Ref	Part No.	Qty.	Description
1	104-8301	8	Nut-Flange, NI
2	99-7654-03	1	Hitch-Duty, Light
3	3234-24	4	Screw-HHF
4	99-7350	1	Decal-Rating, Hitch (Light Duty)
5	114-8307	1	Rear Frame Service ASM
5:2	99-7345	2	Decal-Warning
6	32120-47	2	Ring-Retaining, External
7	32144-4	2	Screw-HWH
8	2412-89	2	Clamp
9	112-3168	2	Rear Shock/Spring ASM
9:4	112-3386	1	Spring
10	325-19	2	Screw-HH
11	87-2440	2	Bumper-Rubber
12	115-7614	1	Swing Arm ASM
12:2	112-3377	2	Bushing-Arm, Control
13	3290-378	4	Tie-Cable
14	3296-23	4	Nut-Lock, NI
15	3296-45	2	Nut-Lock, NI
16	87-7270	4	Washer-Thrust
17	325-10	2	Screw-HH
19	325-17	2	Screw-HH
20	104-8162	1	Battery
21	115-8107	1	Cable-Battery, Negative
22	114-9404	1	Cable-Battery, Positive

Ref	Part No.	Qty.	Description
23	3234-5	2	Screw-HHF
24	104-8300	2	Nut-Flange, NI
25	115-2302-03	1	Base-Battery
26	115-2394	1	Cover-Battery
27	106948	1	Tray-Battery
28	100-6434	1	Rod-Battery, Hold Down
29	100-6435	2	Post-Battery
30	32103-22	2	Nut-Wing
31	3231-22	4	Screw-CARR
32	3254-6	1	Washer-Lock, Internal
33	240-12	1	Grommet
34	115-8108	1	Cable-Battery, Negative
35	32180-030	2	Clip-Harness

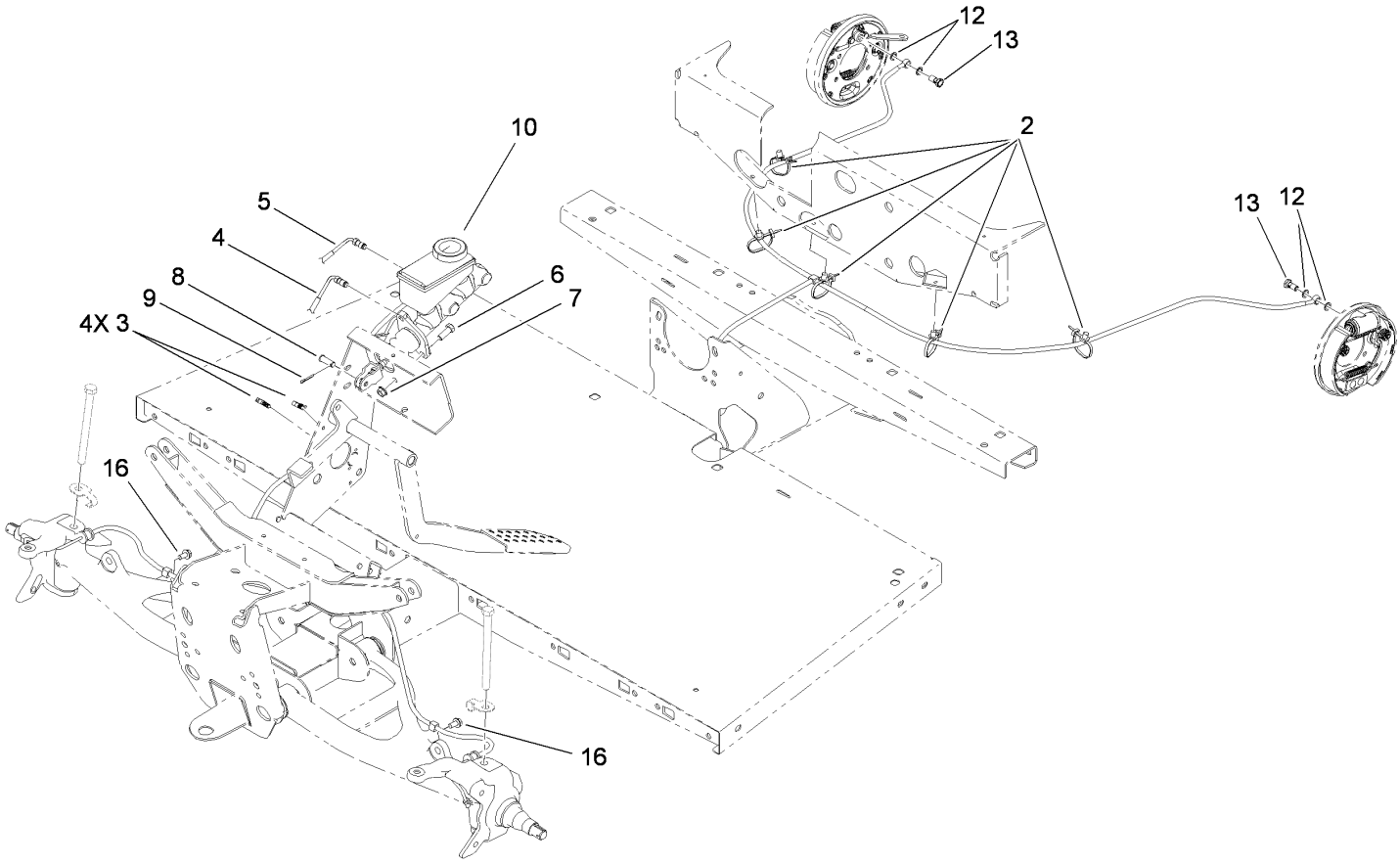

Master Cylinder and Brake Line Assembly

Ref	Part No.	Qty.	Description
2	32180-030	5	Clip-Harness
3	114-8324	4	Clip-Line, Brake
4	112-2925	1	Front Brake Line ASM
5	112-2926	1	Rear Brake Line ASM
6	323-6	2	Screw-HH
7	3290-357	2	Nut-HHF, Whiz
8	283-2	1	Pin-Clevis
9	3272-10	1	Pin-Cotter
10	104-6782	1	Cylinder-Master
12	115-2341	4	Washer-Banjo
13	115-2340	2	Bolt-Banjo
16	32104-82	2	Screw-HHF

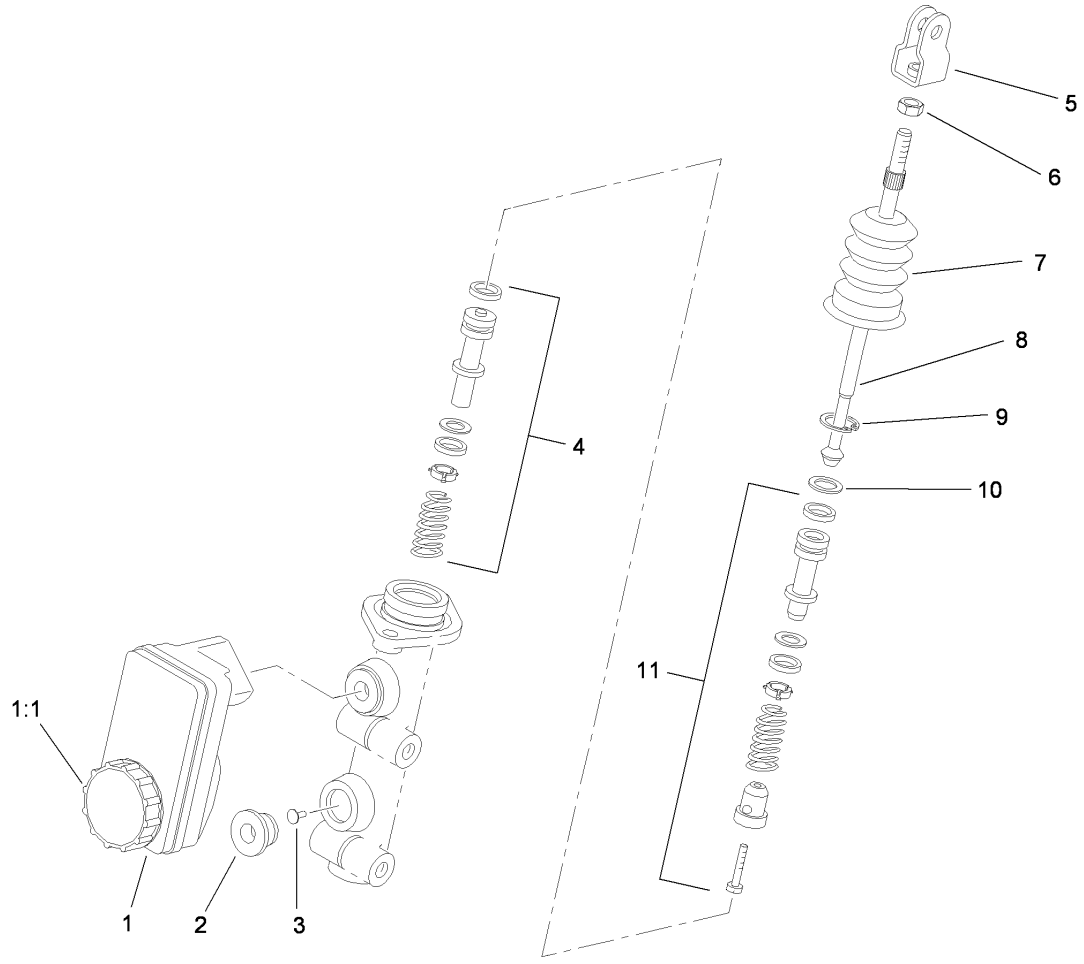

Master Cylinder Assembly No. 104-6782

Ref	Part No.	Qty.	Description
1	104-6845	1	Reservoir ASM
1:1	92-4112	1	Cap ASM
2	93-8971	2	Seal-Port, Flange
3	92-4103	1	Pin-Stop
4	92-4102	1	Secondary Piston ASM
5	92-4110	1	Clevis
6	21-0360	1	Nut-Hex
7	94-5209	1	Cover-Dust
8	94-5210	1	Rod-Push
9	92-4109	1	Ring-Snap
10	92-4108	1	Retainer-Washer
11	92-4101	1	Primary Piston ASM

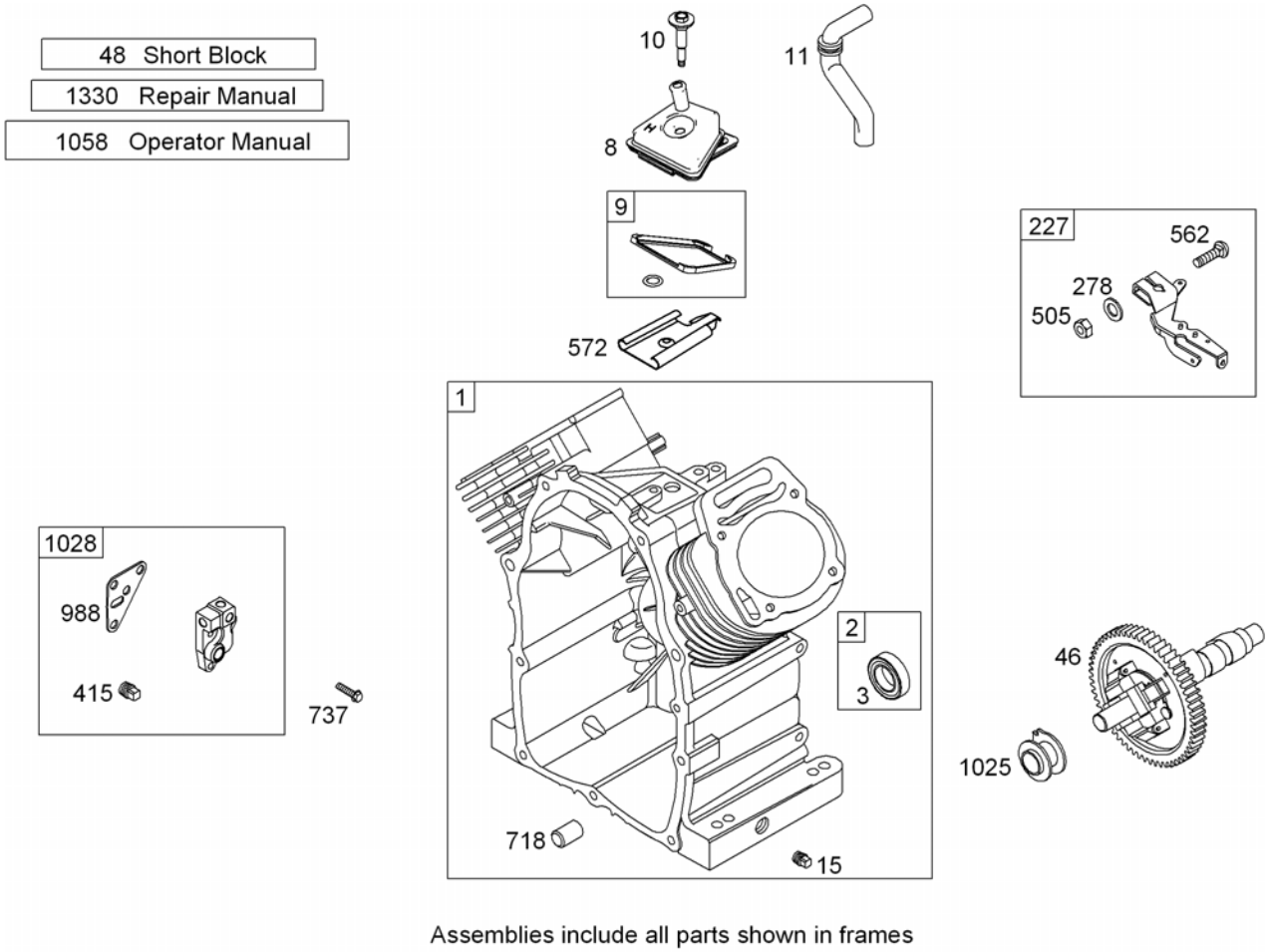

Assemblies include all parts shown in frames

Cylinder Assembly
Briggs and Stratton 295440-0153-G1

Ref	Part No.	Qty.	Description
❷1	692178	1	Cylinder ASM
❷2	808534	1	Bushing-Seal Kit (Magneto Side)
❷❹3	805101S	1	Seal-Oil (Magneto Side)
❷8	808984	1	Breather ASM
❷❹9	809094	1	Gasket-Breather
❷10	690751	1	Screw (Breather ASM)
❷11	806038s	1	Tube-Breather
❷15	690946	1	Plug-Drain, Oil (Cylinder)
❷46	691557	1	Camshaft
❷48	494055	1	Block-Short
❷227	690236	1	Lever-Control, Governor
❷278	842122	1	Washer (Governor Control Lever)
❷415	690283	1	Plug (Oil Filter Adapter)
❷505	690238	1	Nut (Governor Control Lever)
❷562	690239	1	Bolt (Governor Control Lever)
❷572	690686	1	Baffle-Breather
❷718	806469	1	Pin-Locating
❷737	690679	1	Screw (Oil Filter Adapter)
❷❹988	692063	1	Gasket-Adapter, Oil Filter
❷1025	690689	1	Spool-Governor
❷1028	492687	1	Adapter-Filter, Oil
❷1058	277106	1	Manual-Operator
❷1330	272144	1	Manual-Repair

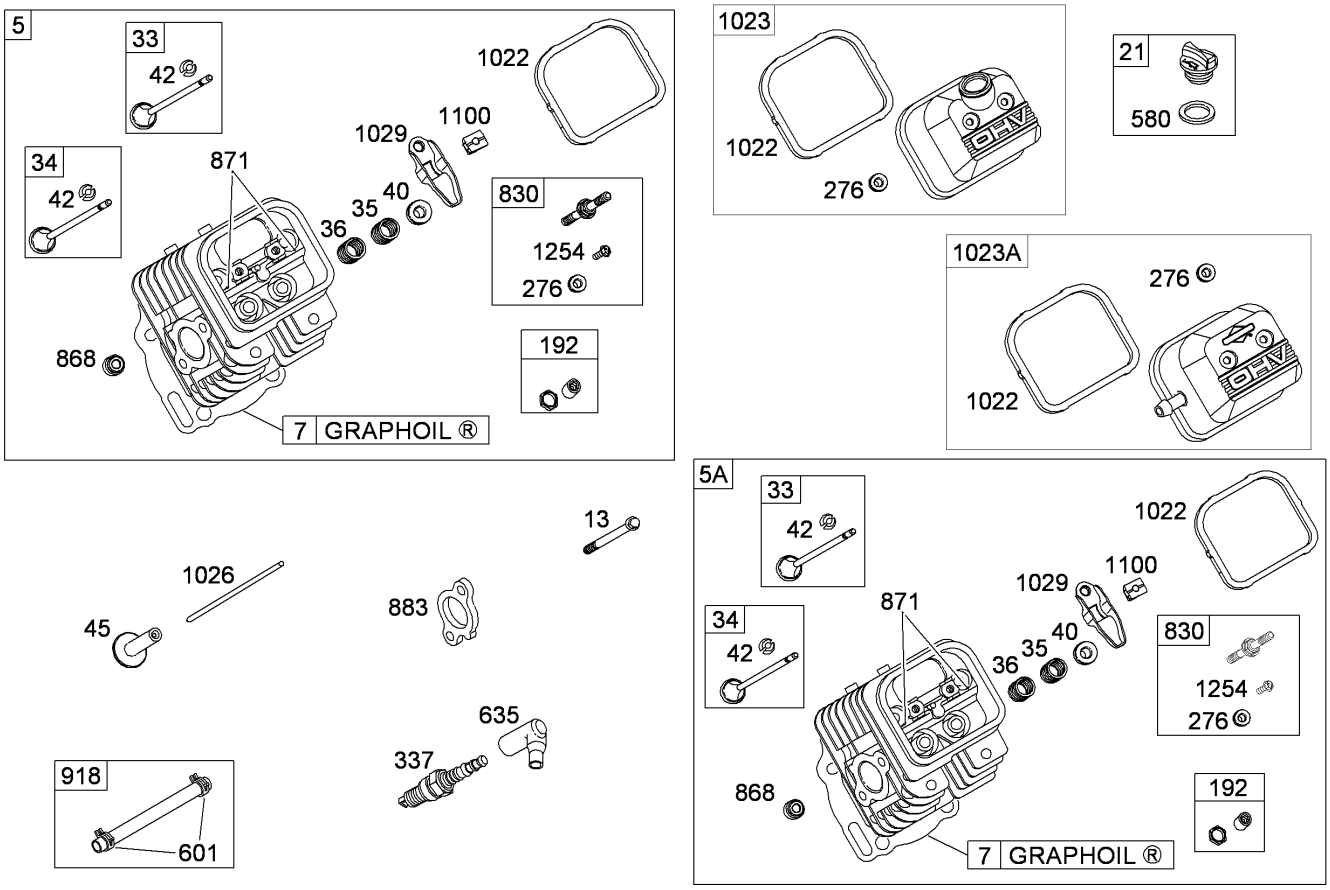

Assemblies include all parts shown in frames

Cylinder Head Assembly
Briggs and Stratton 295440-0153-G1

Ref	Part No.	Qty.	Description
❷5	809200	1	Head-Cylinder (Cylinder Head No.1)
❷5A	809201	1	Head-Cylinder (Cylinder Head No.2)
❷❹7 ❺	806085S	1	Gasket-Head, Cylinder
❷13	692059	1	Screw (Cylinder Head)
❷21	809500	1	Cap-Fill, Oil
❷33	807681	1	Valve-Exhaust
❷34	807680	1	Valve-Intake
❷35	692084	1	Spring-Valve (Intake)
❷36	692084	1	Spring-Valve (Exhaust)
❷40	692058	1	Retainer-Valve
❷42	807683	1	Keeper-Valve
❷45	843379	1	Tappet-Valve
❷192	807623	1	Adjuster-Arm, Rocker
❷276	807085	1	Washer-Sealing (Rocker Cover)
❷337	496018S	1	Spark Plug
❷❺580	691312	1	Seal-O Ring (Oil Fill Cap)
❷601	691038	1	Clamp-Hose
❷635	692076	1	Boot-Spark Plug
❷830	809157	1	Stud-Arm, Rocker
❷❹868 ❺	691963	1	Seal-Valve
❷871	692057	1	Bushing-Guide, Valve

Ref	Part No.	Qty.	Description
❷❹883 ❺	691613	1	Gasket-Exhaust
❷918	791880	1	Hose-Vacuum
❷❹1022 ❺	806039S	1	Gasket-Cover, Rocker
❷1023	843749	1	Cover-Rocker
❷1023A	691558	1	Cover-Rocker (Cylinder No.1)
❷1026	691836	1	Rod-Push (Intake)
❷1026	691758	1	Rod-Push (Exhaust)
❷1029	807323	1	Arm-Rocker
❷1100	791959	1	Pivot-Arm, Rocker
❷1254	807084	1	Screw (Rocker Cover Stud)

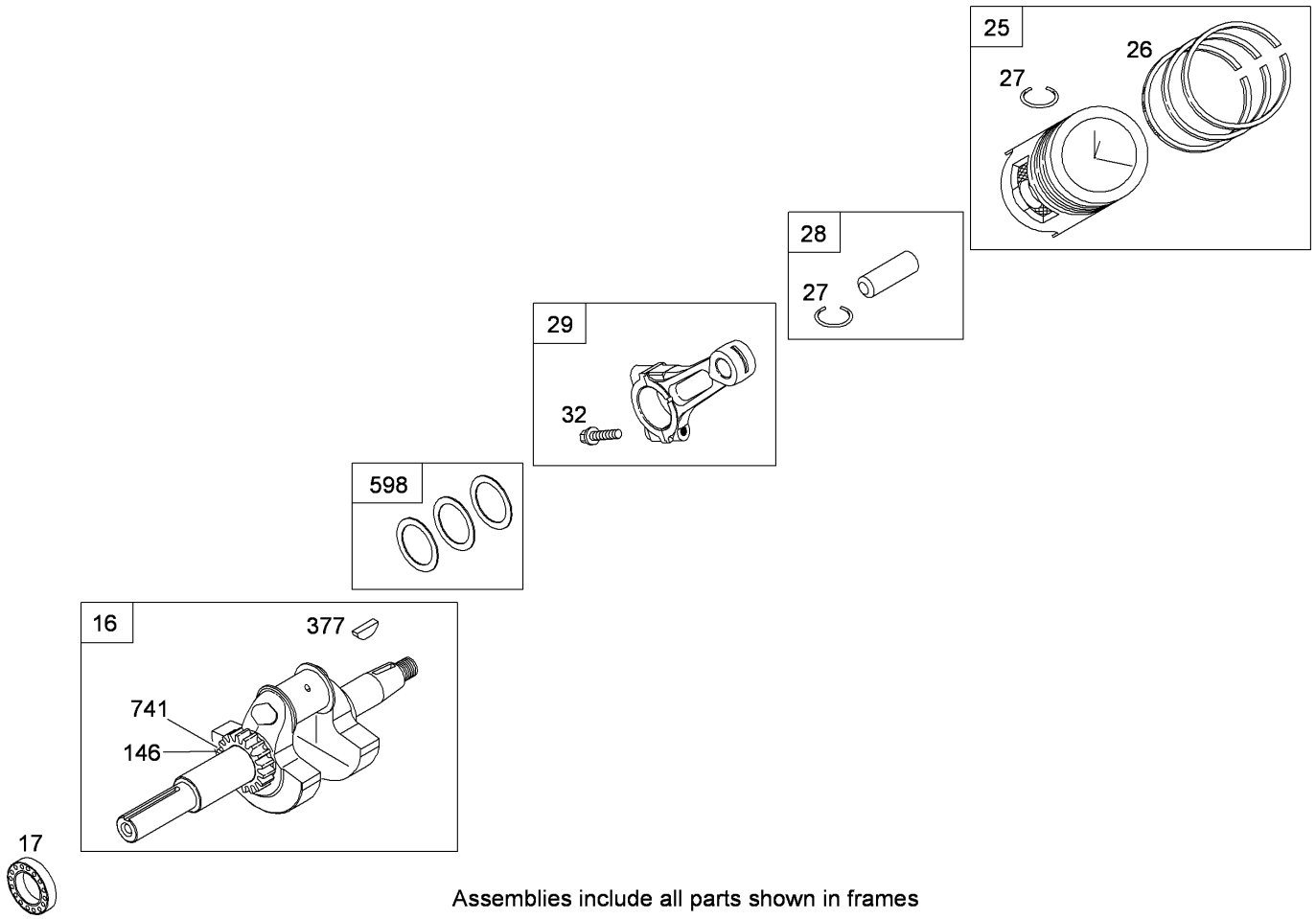

Assemblies include all parts shown in frames

Crankshaft and Piston/Ring Assembly
Briggs and Stratton 295440-0153-G1

Ref	Part No.	Qty.	Description
❷16	692163	1	Crankshaft
❷17	690752	1	Bearing-Ball
❷25	843952	1	Piston ASM (Standard)
❷25	843956	1	Piston ASM (.020 Oversize)
❷26	843953	1	Ring Set (Standard)
❷26	843957	1	Ring Set (.020 Oversize)
❷27	690683	1	Lock-Pin, Piston
❷28	690229	1	Pin-Piston (STD)
❷29	807900S	1	Rod-Connecting
❷32	690698	1	Screw (Connecting Rod)
❷146	691639	1	Key-Timing
❷377	808095	1	Key-Woodruff
❷598	807625	1	Shim-Play, End (Crankshaft Or Camshaft Bearing)
❷741	691530	1	Gear-Timing

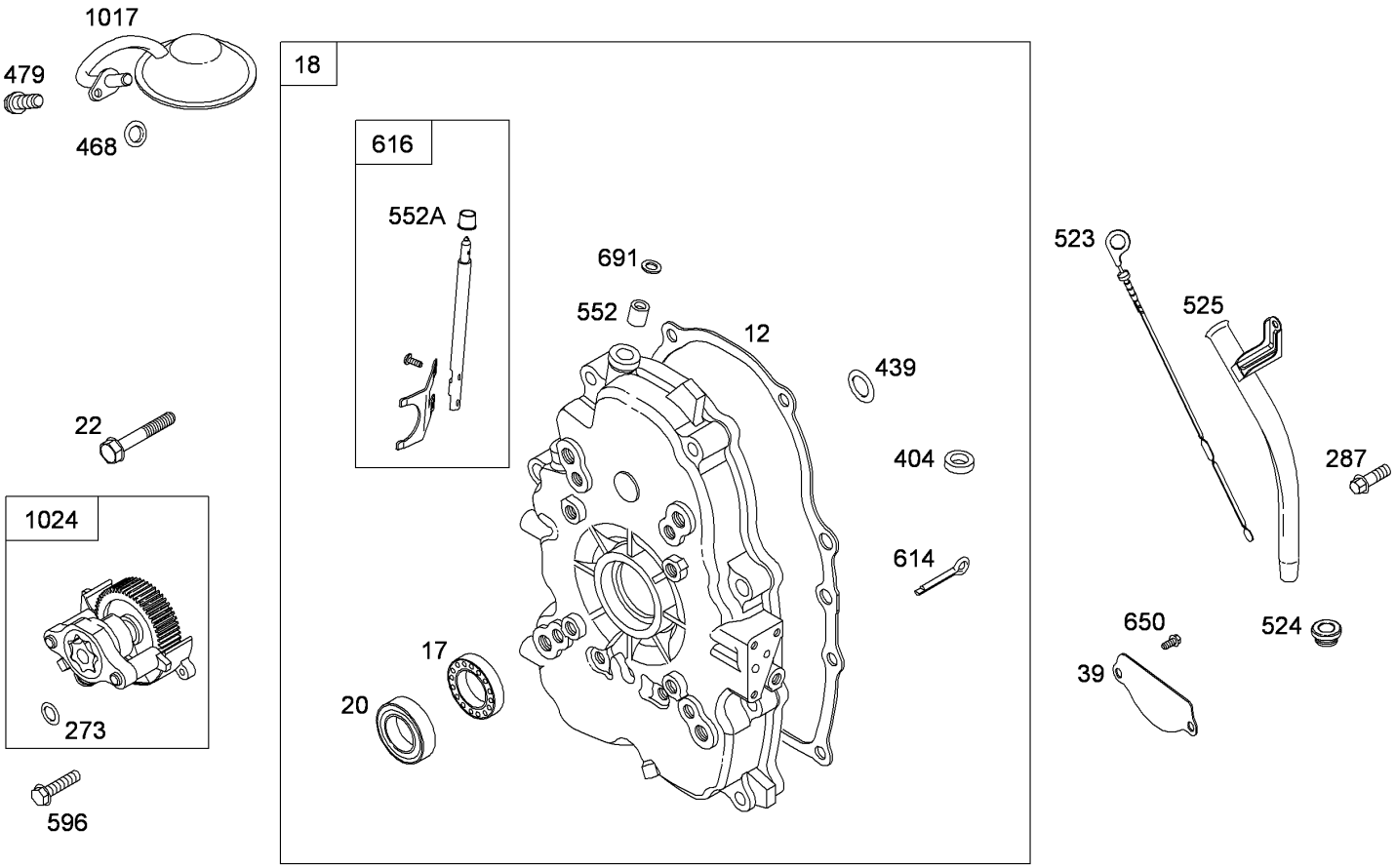

Assemblies include all parts shown in frames

Crankcase Cover/Sump Assembly
Briggs and Stratton 295440-0153-G1

Ref	Part No.	Qty.	Description
❷❹12	843970	1	Gasket-Crankcase
❷17	690752	1	Bearing-Ball
❷18	808847	1	Cover-Crankcase
❷❹20	805049S	1	Seal-Oil (PTO Side)
❷22	807362	1	Screw (Crankcase/Cover/Sump)
❷39	690745	1	Deflector-Oil
❷❹273	690681	1	Seal-O Ring (Oil Pump)
❷287	692062	1	Screw (Dipstick Tube)
❷404	690704	1	Washer (Governor Crank)
❷❹439	692154	1	Seal-O Ring (Crankcase/Cover/Sump)
❷❹468	690690	1	Seal-O Ring (Oil Pump Screen)
❷479	807084	1	Screw (Oil Pump Screen)
❷523	693175	1	Dipstick
❷❹524	693172	1	Seal-Tube, Dipstick
❷525	693174	1	Tube-Dipstick
❷552	690701	1	Bushing-Crank, Governor
❷552A	806686	1	Bushing-Crank, Governor
❷596	691492	1	Screw (Oil Pump)
❷614	691550	1	Retainer-Shaft, Governor
❷616	806685	1	Crank-Governor
❷650	841233	1	Screw (Oil Deflector)
❷❹691	690680	1	Seal-Shaft, Governor
❷1017	690900	1	Screen-Pump, Oil

Ref	Part No.	Qty.	Description
❷1024	693185	1	Pump-Oil

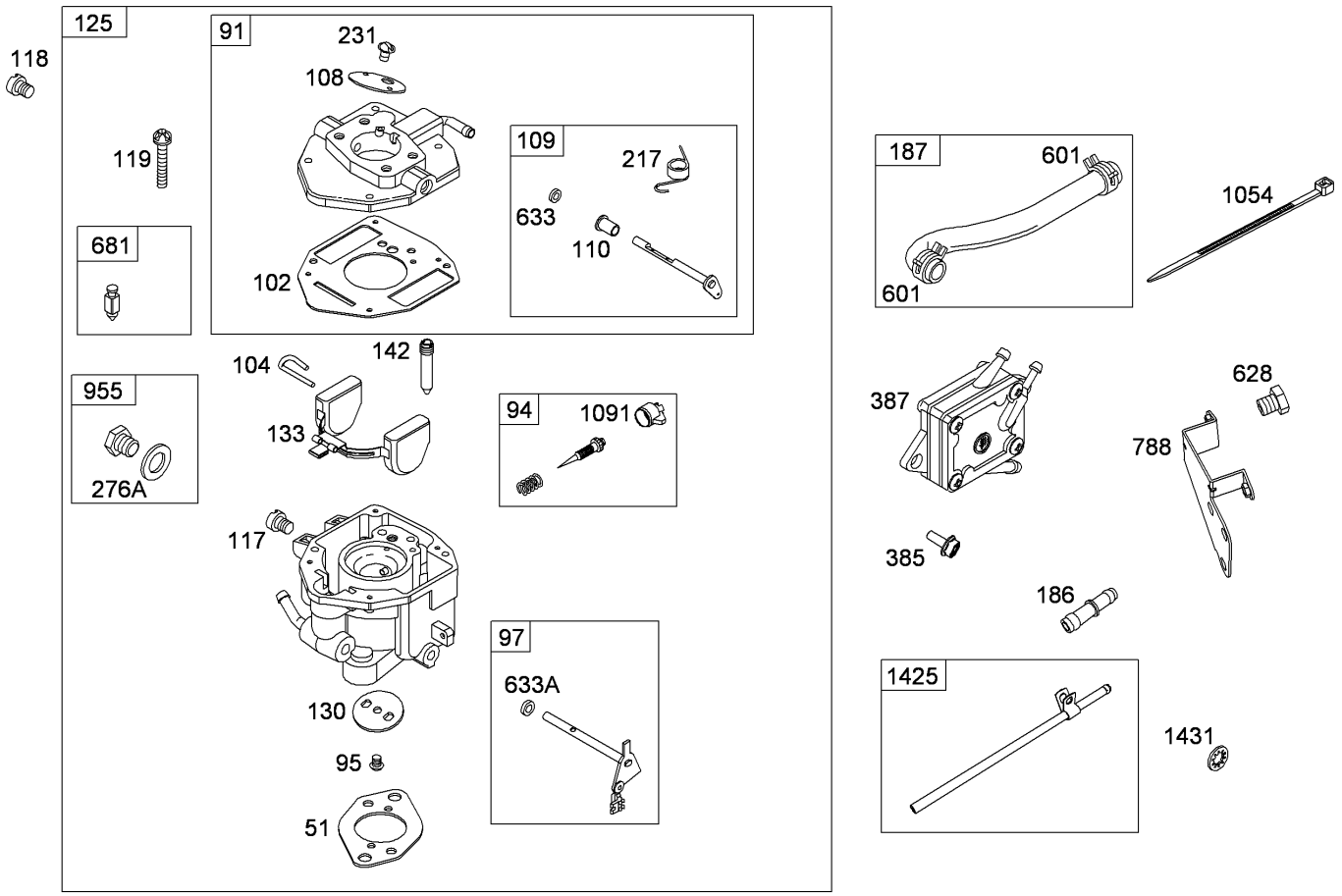

Assemblies include all parts shown in frames

Carburetor and Fuel Pump Assembly
Briggs and Stratton 295440-0153-G1

Ref	Part No.	Qty.	Description
❷❹51	691694	1	Gasket-Intake
❷91	843532	1	Body-Carburetor, Upper
❷❸94	842870	1	Idle Mixture Kit
❷95	690718	1	Screw (Throttle Valve)
❷97	841498	1	Shaft-Throttle
❷❸102	692077	1	Gasket-Body, Carburetor
❷❸104	690723	1	Pin-Hinge, Float
❷108	690719	1	Valve-Choke
❷109	808962	1	Shaft-Choke
❷❸110	806861	1	Washer (Choke Shaft)
❷117	842318	1	Jet-Main (Standard)
❷118	842836	1	Jet-Main (High Altitude)
❷119	842791	1	Screw (Upper To Lower Carburetor Body)
❷125	843130	1	Carburetor
❷130	690726	1	Valve-Throttle
❷133	806961	1	Float-Carburetor
❷❸142	842319	1	Nozzle-Carburetor
❷186	844032	1	Connector-Hose
❷187	791801	1	Line-Fuel
❷217	806862	1	Spring-Return, Choke
❷231	690718	1	Screw (Choke Valve)
❷❸276A ❹❺	693497	1	Washer-Sealing

Ref	Part No.	Qty.	Description
❷385	693169	1	Screw (Fuel Pump)
❷387	808969	1	Pump-Fuel
❷601	691038	1	Clamp-Hose
❷628	806660	1	Screw (Fuel Pump Bracket)
❷❸633	690722	1	Seal-Shaft, Choke Throttle
❷633A	806131	1	Seal-Shaft, Choke Throttle
❷❸681	808798	1	Valve-Needle, Float
❷788	691559	1	Bracket-Pump, Fuel
❷955	807723	1	Plug-Carburetor
❷1054	280275	1	Tie-Cable
❷❸1091	691516	1	Cap-Limiter
❷1425	844036	1	Hose-Line, Purge
❷1431	844035	1	Washer (Tube Clamp) (Purge Line Hose)

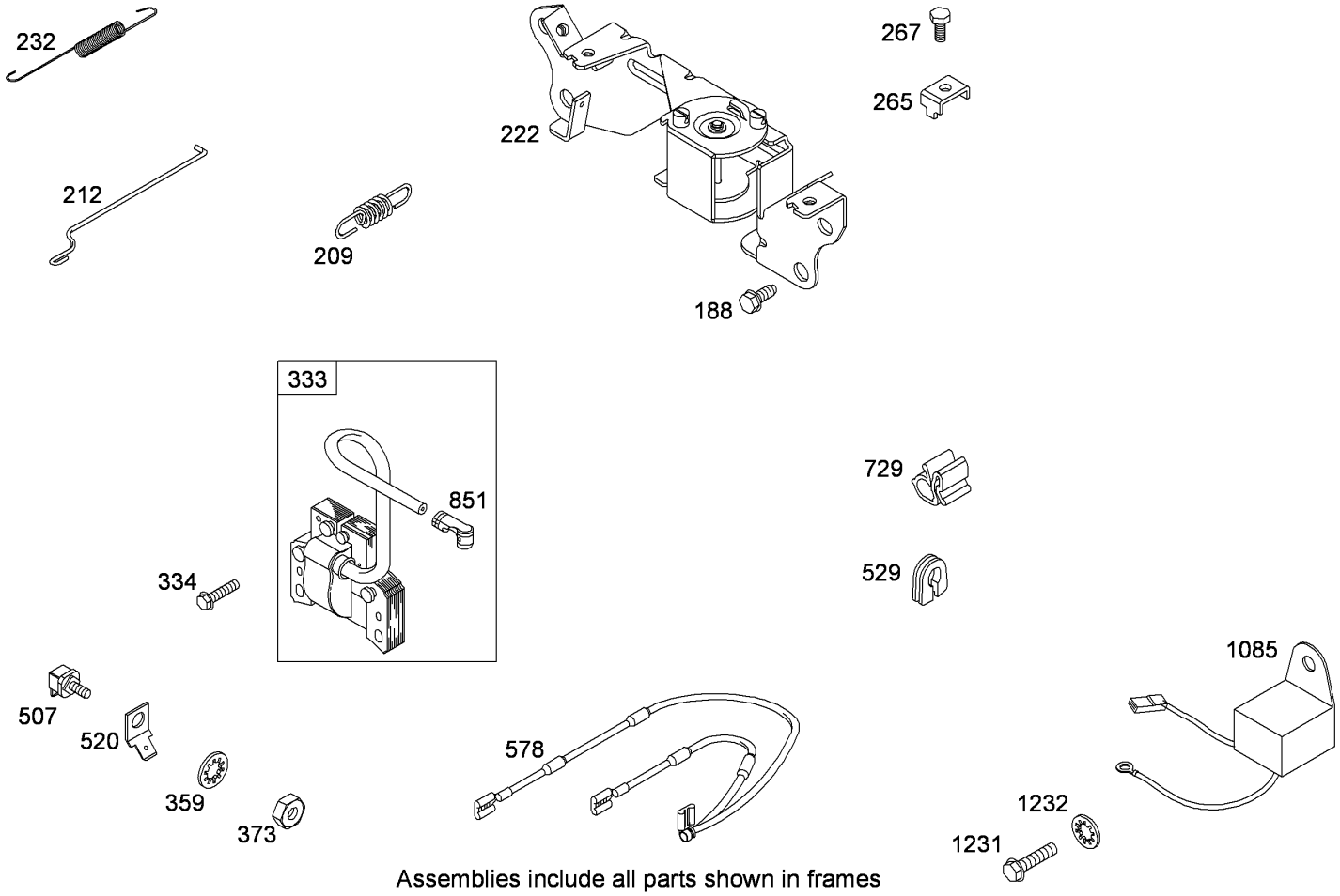

Assemblies include all parts shown in frames

Governor Control Assembly
Briggs and Stratton 295440-0153-G1

Ref	Part No.	Qty.	Description
❷188	692056	1	Screw (Control Bracket)
❷209	691507	1	Spring-Governor (Brown)
❷212	690712	1	Link-Throttle
❷222	691570	1	Bracket-Control
❷232	692073	1	Spring-Link, Governor
❷265	691024	1	Clamp-Casing
❷267	841552	1	Screw (Casing Clamp)
❷333	492341	1	Armature-Magneto
❷334	692066	1	Screw (Magneto Armature)
❷359	691077	1	Washer (Ground Terminal)
❷373	691612	1	Nut (Ground Terminal)
❷507	691972	1	Insulator
❷520	691084	1	Terminal-Ground
❷529	690744	1	Grommet (Ignition)
❷578	692319	1	Wire ASM
❷729	690586	1	Clip-Wire
❷851	493880s	1	Terminal-Spark Plug
❷1085	809093	1	Module-Ignition
❷1231	692067	1	Screw (Ignition Module)
❷1232	691077	1	Washer (Ignition Module)

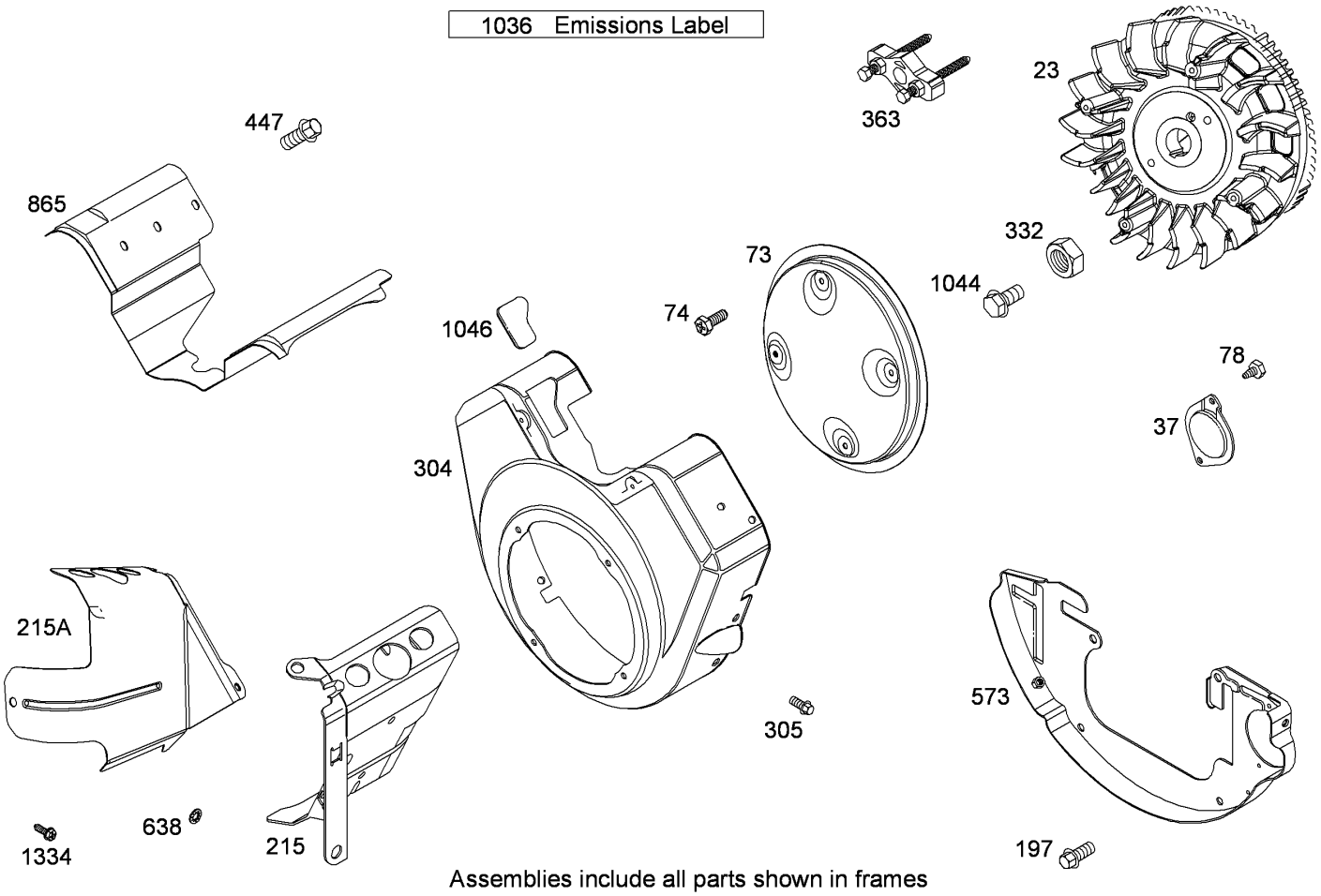

Assemblies include all parts shown in frames

Blower Housing, Flywheel and Air Guide Assembly
Briggs and Stratton 295440-0153-G1

Ref	Part No.	Qty.	Description
❷23	842683	1	Flywheel
❷37	841309	1	Guard-Flywheel
❷73	841440	1	Screen–Rotating
❷74	841441	1	Screw (Rotating Screen)
❷78	690688	1	Screw (Flywheel Guard)
❷197	807163	1	Screw (Back Plate)
❷215	841183	1	Guide-Air (Cylinder No.1)
❷215A	841182	1	Guide-Air (Cylinder No.2)
❷304	842681	1	Housing-Blower
❷305	841233	1	Screw (Blower Housing)
❷332	690887	1	Nut (Flywheel)
❷363	19203	1	Puller-Flywheel
❷447	841233	1	Screw (Air Guide Cover)
❷573	841310	1	Plate–Back
❷638	691551	1	Washer (Cylinder Head Cover)
❷865	843768	1	Cover-Guide, Air
❷1036		1	Label-Emissions
❷1044	692056	1	Screw (Flywheel)
❷1046	843068	1	Plug-Housing, Blower
❷1334	841233	1	Screw (Cylinder Head Cover)

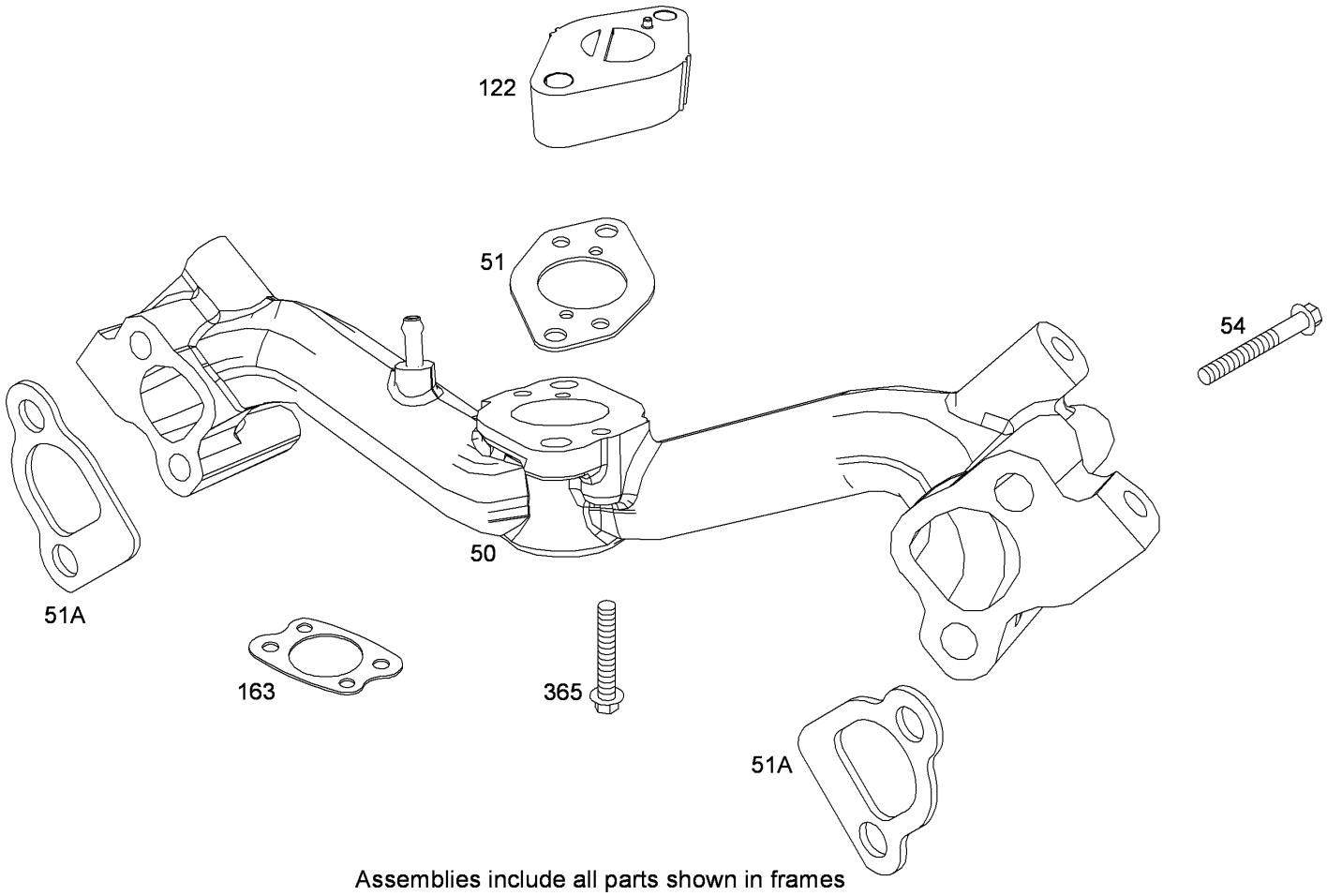

Assemblies include all parts shown in frames

Intake Manifold Assembly
Briggs and Stratton 295440-0153-G1

Ref	Part No.	Qty.	Description
❷50	844034	1	Manifold-Intake
❷❹51	691694	1	Gasket-Intake (Manifold To Carburetor)
❷❹51A ❺	692035	1	Gasket-Intake
❷54	690676	1	Screw (Intake Manifold)
❷122	690691	1	Spacer-Carburetor
❷❹163	692081	1	Gasket-Cleaner, Air
❷365	690711	1	Screw (Carburetor)

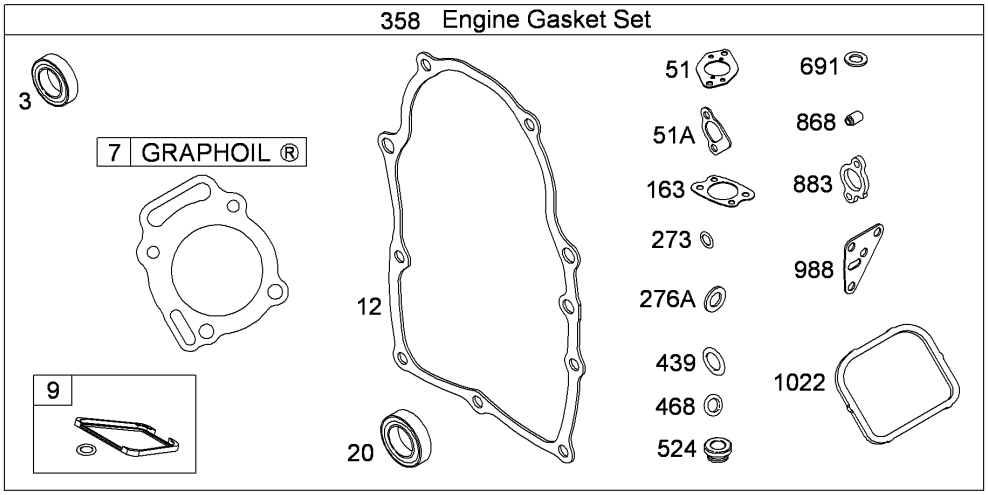

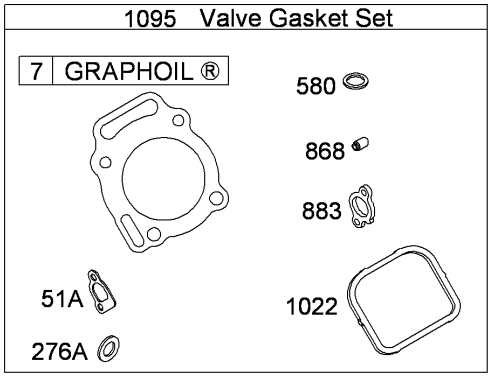

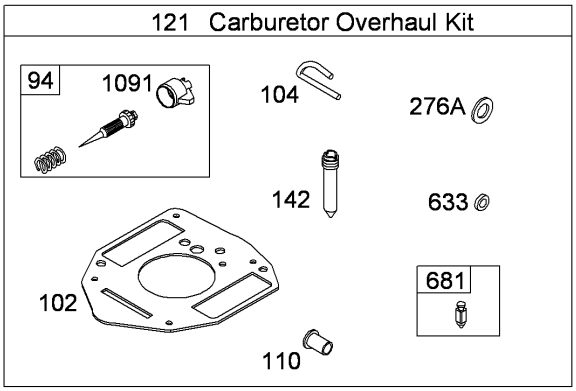

Assemblies include all parts shown in frames

Engine Gasket and Carburetor Overhaul Kit
Briggs and Stratton 295440-0153-G1

Ref	Part No.	Qty.	Description
❷❹3	805101S	1	Seal-Oil (Mag Side)
❷❹7 ❺	806085S	1	Gasket-Head, Cylinder
❷❹9	809094	1	Gasket-Breather
❷❹12	843970	1	Gasket-Crankcase
❷❹20	805049S	1	Seal-O Ring (PTO Side)
❷❹51	691694	1	Gasket-Intake (Manifold To Carburetor)
❷❹51A ❺	692035	1	Gasket-Intake
❷❸94	842870	1	Idle Mixture Kit
❷❸102	692077	1	Gasket-Body, Carburetor
❷❸104	690723	1	Pin-Hinge, Float
❷❸110	806861	1	Washer (Choke Shaft)
❷121	842877	1	Carburetor Overhaul Kit
❷❸142	842319	1	Nozzle-Carburetor
❷❹163	692081	1	Gasket-Cleaner, Air
❷❹273	690681	1	Seal-O Ring (Oil Pump)
❷❸276A ❹❺	693497	1	Washer-Sealing
❷358	842722	1	Engine Gasket Set
❷❹439	692154	1	Seal-O Ring (Crankcase/Cover/Sump)
❷❹468	690690	1	Seal-O Ring (Oil Pump Screen)
❷❹524	693172	1	Seal-Tube, Dipstick

Ref	Part No.	Qty.	Description
❷❺580	691312	1	Seal-O Ring (Oil Fill Cap)
❷❸633	690722	1	Seal-Shaft, Choke Throttle
❷❸681	808798	1	Valve-Needle, Float
❷❹691	690680	1	Seal-Shaft, Governor
❷❹868 ❺	691963	1	Seal-Valve
❷❹883 ❺	691613	1	Gasket-Exhaust
❷❹988	692063	1	Gasket-Adapter, Oil Filter
❷❹1022 ❺	806039S	1	Gasket-Cover, Rocker
❷❸1091	691516	1	Cap-Limiter
❷1095	842723	1	Valve Gasket Set

Attachments and Accessories

For 07273 - Workman MDX Utility Vehicle

Product Name	Model/Part
Roll-Over Protection System	07276
Receiver Hitch Kit	07278
Stake Side Kit	07290
Portable Refreshment Center	07298

NOTES


TORO®