Form No. 3361–771 Rev A

52” Blower Kit

Groundsmaster 3280D/3320/200 Series

Model No. 30502—Serial No. 290000001 and Up

Installation Instructions

Safety

Improper use or maintenance by the operator or owner can result in injury. To reduce the potential for injury, comply with these safety instructions and always pay attention to the safety alert ⚠ symbol, which means CAUTION, WARNING, or DANGER—“personal safety instruction.” Failure to comply with the instruction may result in personal injury or death.

Before Operating

- Read and understand the contents of this manual before starting and operating the machine. Become familiar with all controls and know how to stop quickly. A free replacement manual is available by sending complete Model and Serial Numbers to:

  The Toro Company

  8111 Lyndale Avenue South

  Minneapolis, Minnesota 55420

- Never allow children to operate the machine. Do not allow adults to operate the machine without proper instruction. Only trained operators, skilled in slope operation and who have read this manual should operate this machine.
- Never operate machine when under the influence of drugs or alcohol.
- Remove all debris or other objects that might be picked up and thrown by cutter blades. Keep all bystanders away from the operating area.
- Keep all shields and safety devices in place. If a shield, safety device, or decal is defective or damaged, repair or replace it before operating machine. Also, tighten any loose nuts, bolts, and screws to insure machine is in safe operating condition.
- Do not wear loose fitting clothing because it could get caught in moving parts. Always wear long pants and substantial shoes. Wearing safety glasses, safety shoes, and a helmet is advisable and required by some local ordinances and insurance regulations.
- Be sure interlock switches are adjusted correctly so engine cannot be started unless traction pedal is released–neutral position–and PTO switch is in DISENGAGED position.
- Fill fuel tank before starting the engine. Avoid spilling any fuel. Since fuel is flammable, handle it carefully.
  - Use an approved fuel container.
  - Do not fill fuel tank when engine is hot or running.
  - Do not smoke while handling fuel.
  - Fill fuel tank outdoors and up to about one inch (25 mm) from the top of the tank, not the filler neck.
  - Wipe up any spilled fuel.

While Operating

- Sit on the seat when starting the engine and operating the machine.
- Before starting the engine:
  - Engage parking brake.
  - Make sure traction pedal is in neutral and PTO is in DISENGAGE position.
  - After engine is started, release parking brake and keep foot off traction pedal. Machine must not move. If movement is evident, the neutral return mechanism is adjusted incorrectly. Shut engine off and adjust until machine does not move when traction pedal is released.
- Do not run the engine in a confined area without adequate ventilation. Exhaust fumes are hazardous and could possibly be deadly.
- Maximum seating capacity is one person. Therefore, never carry passengers.
- Check carefully for overhead clearances before driving under any objects.
- The grass deflector or complete blower assembly must always be installed on cutting unit.
- Operator must be skilled and trained in how to drive on hillsides. Failure to use caution on slopes or hills may cause loss of control and vehicle to tip or roll, possibly resulting in personal injury or death.
- Traverse slopes carefully. Do not start or stop suddenly when traversing slopes or when traveling uphill or downhill.

© 2008 by The Toro Company
8111 Lyndale Avenue South
Bloomington, MN 55420-1196

All Rights Reserved
Printed in the USA

- If engine stalls or machine loses headway and cannot make it to the top of a slope, do not turn machine around. Always back slowly straight down the slope.
- Using the machine demands the operator's complete attention. To prevent loss of control:
  - Operate only in daylight or when there is good artificial light.
  - Drive slowly.
  - Avoid sudden starts and stops.
  - Look behind machine before backing up.
  - Watch for holes or other hidden hazards.
  - Do not drive close to a sand trap, ditch, creek, or hazard.
  - Reduce speed when making sharp turns and when turning on a hillside.
  - The cutting deck must be lowered when going down slopes for steering control.
- The grass deflector must always be installed and in lowest position on the cutting unit when blower assembly is removed. This product is designed to drive objects into the ground where they lose energy quickly in grassy areas. However, don't take an injury risk! When a person or pet appears unexpectedly in or near the mowing area, STOP MOWING. Careless operation, combined with terrain angles, ricochets, or improperly positioned guards, can lead to thrown object injuries. Do not resume mowing until area is cleared.
- Never raise the cutting unit while the blades or other parts are rotating.
- If cutting blades strike a solid object or the machine vibrates abnormally, disengage PTO, move throttle to SLOW, set parking brake, and shut engine off. Remove key from switch to prevent possibility of accidental starting. Check cutting unit, blower assembly and traction unit for damage and defective parts. Repair any damage before restarting the engine and operating the cutting unit. Assure cutting unit blades are in good condition and blade bolts are tightened to proper torque specifications (See Cutting Deck Operator's Manual).
- If the cutting unit discharge area or blower assembly ever plugs, disengage PTO and shut engine off before removing the obstruction.
- To stop machine, remove foot from traction pedal and use brakes. Gradually reversing the traction pedal can provide additional braking.
- Do not touch engine, muffler, or it adjacent shroud while engine is running or soon after it has stopped. These areas could be hot enough to cause a burn.
- Lower the cutting unit to the ground and remove key from switch whenever machine is left unattended.
- Before getting of the seat:
  - Move traction pedal to neutral position and remove foot from pedal.
  - Set the parking brake and disengage the PTO.
  - Shut the engine off and remove key from ignition switch. Wait for all movement to stop before getting off the seat.

Maintenance

- Remove key from ignition switch to prevent accidental starting of the engine when servicing, adjusting, or storing the machine.
- If major repairs are ever needed or assistance is desired, contact an Authorized TORO Distributor.
- To reduce potential fire hazard, keep the engine free of excessive grease, grass, leaves, and accumulations of dirt.
- Make sure machine is in safe operating condition by keeping nuts, bolts, and screws tight. Check all cutting unit blade mounting bolts frequently to assure they are tightened to proper torque specifications (See Cutting Deck Operator's Manual).
- Make sure all hydraulic line connectors are tight, and all hydraulic hoses and lines are in good condition before applying pressure to the system.
- Keep body and hands away from pin hole leaks or nozzles that eject hydraulic fluid under high pressure. Use paper or cardboard, not hands, to search for leaks. Hydraulic fluid escaping under pressure can have sufficient force to penetrate skin and cause serious injury. If fluid is ejected into the skin, it must be surgically removed within a few hours by a doctor familiar with this form of injury or gangrene may result.
- Before disconnecting or performing any work on the hydraulic system, all pressure in system must be relieved by stopping engine and lowering implement to the ground.
- If the engine must be running to perform maintenance or an adjustment, keep clear of PTO shaft, cutting unit blades, and other moving parts.
- At the time of manufacture, the machine conformed to safety standards in effect for riding mowers. To ensure optimum performance and continued safety certification of the machine, use genuine TORO replacement parts and accessories. Replacement parts and accessories made by other manufacturers may result in non–conformance with the safety standards, and the warranty may be voided.

Safety and Instruction Decals

Safety decals and instructions are easily visible to the operator and are located near any area of potential danger. Replace any decal that is damaged or lost.

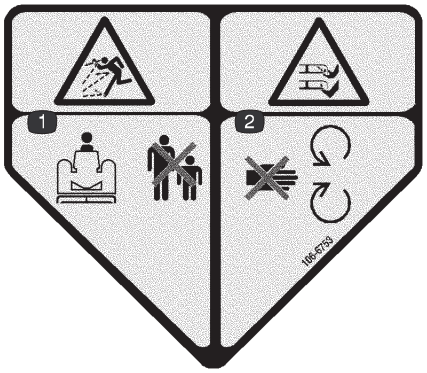

106-6753

1. Thrown object hazard—keep bystanders a safe distance from the machine.
2. Cutting/dismemberment hazard of hand or foot, mower blade—stay away from moving parts.



93-7301

1. Warning—read the *Operator's Manual.*
2. Thrown object hazard—stay away from moving parts.



107-2926

1. Cutting/dismemberment hazard, impeller—stay away from moving parts.
2. Thrown object hazard—keep bystanders a safe distance from the machine.

Setup

Loose Parts

Note: Use this chart as a checklist to ensure that all parts have been received. Without these parts, total setup cannot be completed. **Specifications and design subject to change without notice.**

Description	Qty.	Use
Double pulley	1	
Pulley nut	1	Install new pulley
Nut cover	1	
Pivot brackets	2	
Front baffle	1	
Capscrew 5/16—18 x 7/8” lg.	1	
Capscrew 5/16—18 x 5/8” lg.	2	
Locknut 5/16—18	3	
Rear baffle	1	
Capscrew 5/16—18 x 3/4” lg.	2	
Capscrew 5/16—18 x 7/8” lg.	1	
Locknut 5/16—18	3	
Center ring baffle	1	
Capscrew 3/8—16 x 1” lg.	4	
Lockwasher	4	
Capscrew 1/4—20 x 3/4” lg.	2	
Locknut 1/4—20	2	
Right ring baffle	1	
Capscrew 1/4—20 x 3/4” lg.	3	
Locknut 1/4—20	3	
Blower assembly	1	
Bracket plate	2	
Carriage bolt 5/16—18 x 3/4” lg.	4	
Locknut 5/16—18	6	
Capscrew 5/16—18 x 3/4” lg.	2	
Idler assembly	1	
Capscrew 5/16—18 x 3/4” lg.	3	
Washer 5/16	3	
Locknut 5/16—18	3	
Chute assembly	1	Mount to blower
Belt cover	1	
Spring bracket	1	
Capscrew 1/4—20 x 3/4” lg.	2	
Locknut 1/4—20	2	

Description	Qty.	Use
Bumper	1	Mount bumper
Capscrew 3/8—16 x 1” lg.	2	
Locknut 5/16—18	2	
Capscrew 1/2—13 x 1–1/2” lg.	2	
Decal	1	Install on cutting deck
Installation instructions	1	Read before installation
Parts catalog	1	

Remove Cutting Unit from Traction Unit

1. Position machine on a level surface, raise cutting unit, engage parking brake, be sure traction pedal is in neutral position, PTO lever in OFF position, shut engine OFF and remove key from switch.

Caution

Counterbalance spring is in tension when deck is in lower position (200 series traction units only).

Always raise deck before adjusting or removing spring.

2. On 200 series traction units only, disconnect counterbalance from traction unit, remove lock pins from brackets, separate spring tension assemblies from brackets and lay them down on the deck. Loosely secure lock pins to brackets to prevent losing them (Fig. 1).

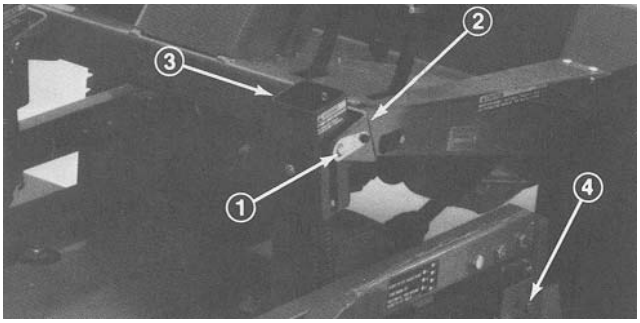

Figure 1

1. Lock pin
2. Bracket
3. Spring tension assembly
4. Height of cut pins

3. Lower cutting unit, remove (4) pins from height–of–cut brackets (Fig. 1).
4. Start engine, raise traction unit lift arms.
5. Stop engine and slide cutting unit away from traction unit, separating male and female sections of PTO shaft (Fig. 2).



Figure 2

1. Male PTO shaft
2. Female PTO shaft

Caution

If engine is started and PTO shaft is allowed to rotate, serious injury could result.

Do not start engine and engage the PTO lever when when PTO shaft is not connected to gear box on cutting unit.

Install New Spindle Pulley

1. Unhook latches securing right cover to top of cutting unit. Remove cover from cutting unit.
2. Loosen (2) nuts securing idler plate so tension of the idler pulley against the belt is released (Fig. 3).

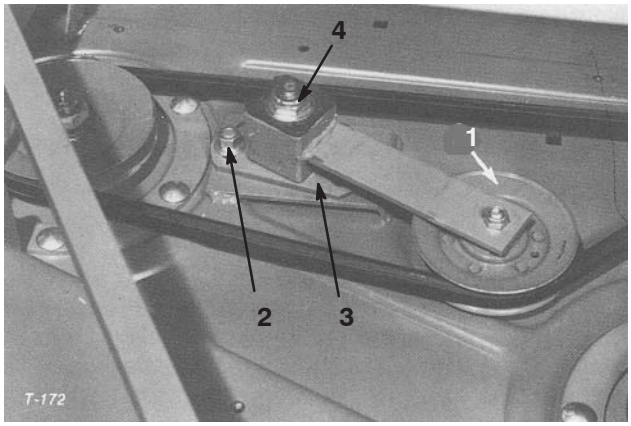

Figure 3

1. Idler pulley
2. Nuts
3. Idler plate
4. Idler adjusting nut

3. Remove belt from right spindle pulley (Fig. 4).

4. Remove six carriage bolts and flange nuts securing spindle housing assembly and support ring to cutting unit (Fig. 4). Slide spindle housing assembly out bottom of cutting unit.

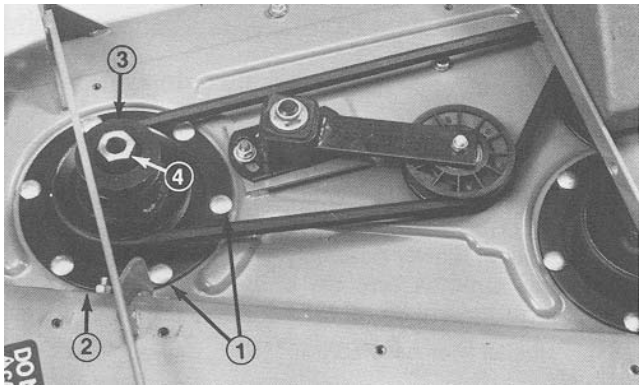

Figure 4

1. Carriage bolts
2. Support ring
3. Double spindle pulley
4. Pulley nut

5. Remove nut retaining pulley on spindle shaft. Remove pulley from shaft.

6. Slide new double spindle pulley onto spindle shaft. Do not install pulley nut at this time.

7. Slide pulley end of spindle housing assembly through hole in cutting unit, and loop belt around pulley and idler. Mount spindle assembly in place with support ring and six carriage bolts and flange nuts.

8. Install new pulley nut onto spindle shaft and tighten to 100 ft–Ib. Install nut cover.

9. Adjust (tighten) idler adjusting nut to 25–30 ft–lb to achieve proper belt tension. Tighten idler plate nuts.

Remove/Modify Grass Deflector

1. Remove capscrews, locknuts and springs securing deflector mounts to pivot brackets (Fig. 5).

2. Remove carriage bolts and flange nuts securing pivot brackets to housing (Fig. 5).

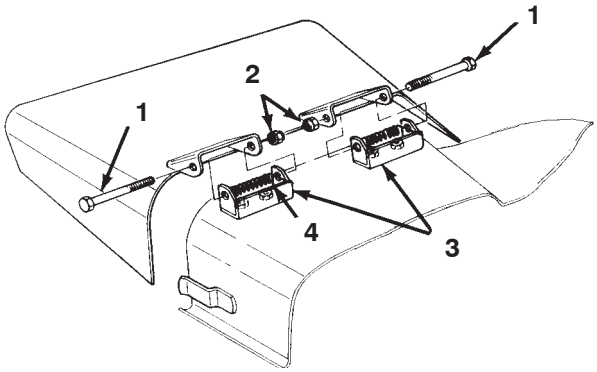

Figure 5

1. Capscrew
2. Locknuts
3. Pivot brackets
4. Spring

3. Using capscrews, locknuts and springs previously removed, install new pivot brackets to deflector mounts (Fig. 6). Do not over tighten nuts because brackets must be allowed to pivot.

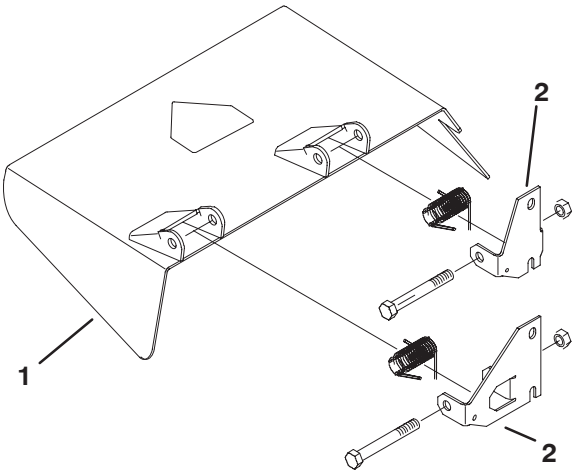

Figure 6

1. Grass deflector
2. Pivot brackets

4. Save this assembly for side discharge operation.

Mount Deck Baffles

1. Mark and drill a 3/8” dia. hole thru the center of the deflector stop (Fig. 8).

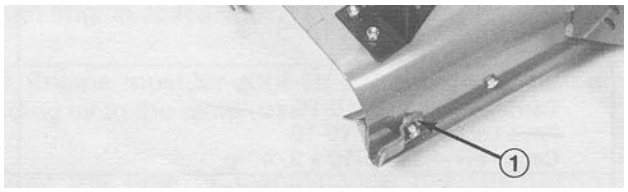

Figure 7

1. Deflector stop

2. Mount end of front baffle to deck with a 5/16 – 18 x 7/8” lg. capscrew and locknut (Fig. 8)

3. Align baffle with edge of deck and use baffle as a template to mark and drill (2) remaining 3/8” dia. holes in deck (Fig. 8).

4. Secure baffle to deck with (2) 5/16–18 x 518” lg. capscrews and locknuts (Fig. 8).

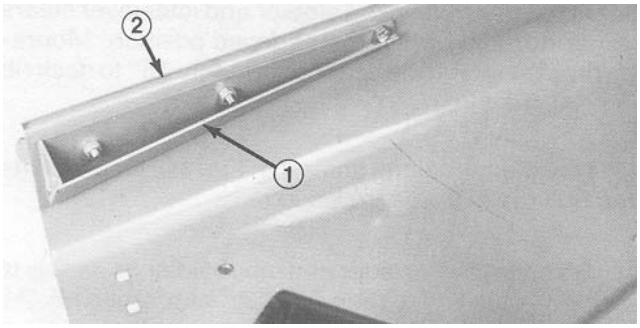

Figure 8

1. Front baffle
2. Edge of deck

5. Using baffle as a template, mark and drill (3) 3/8” dia. holes thru deck.

6. Secure baffle to deck with (2) 5/16 – 18 x 3/4” lg. carriage bolts, (1) 5/16 – 18 x 7/8” lg. capscrew and (3) locknuts.

7. Align rear baffle with corner of discharge opening (Fig. 9).

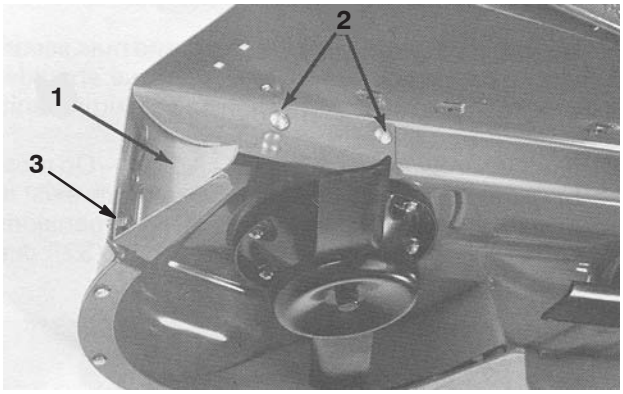

Figure 9

1. Rear baffle
2. Carriage bolts
3. Capscrew

8. Position center ring baffle on deck (Fig. 10). Using a long thin pencil or punch, mark (4) mounting holes in deck. Holes may already be in deck.

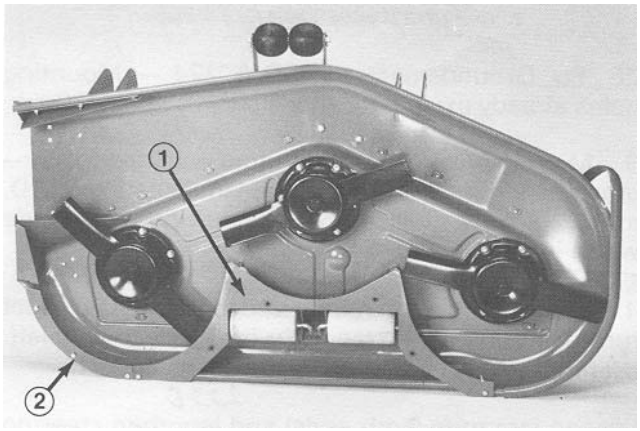

Figure 10

1. Center ring baffle
2. Right ring baffle

9. Drill (4)13/32” holes in deck, if required.

10. Mount center baffle to deck with (4) 3/8 – 16 x 1 ” lg. capscrews and lockwashers (Fig. 10).

11. Using center baffle as a template, mark and drill (2) 9/32” dia. holes through center of curved edge of deck (Fig. 9).

12. Secure baffle to edge of deck with (2) 1/4 – 20 x 3/4” lg. capscrews and locknuts (Fig. 10).

13. Align right ring baffle with end of center baffle and edge of deck (Fig. 10). Mark and drill (3) 9/32” dia. holes in center of curved edge of deck.

14. Secure right baffle to deck with (3) 1/4 – 20 x 3/4” lg. capscrews and locknuts.

15. Make sure all fasteners are tight. Carefully rotate blades by hand to make sure they clear baffles.

Install Blower Mounting Brackets And Blower

1. Position blower and mounting brackets on deck, aligning mounting holes with holes previously used for mounting grass deflector (Fig. 11). Figure shown with blower removed.

Note: If cutting unit was previously equipped with a bagger which required a large hole in discharge area of deck, mount cover plate (order part no. 44–5750 from an authorized TORO Distributor) between bolt head and bottom side of deck instead of bracket plates.

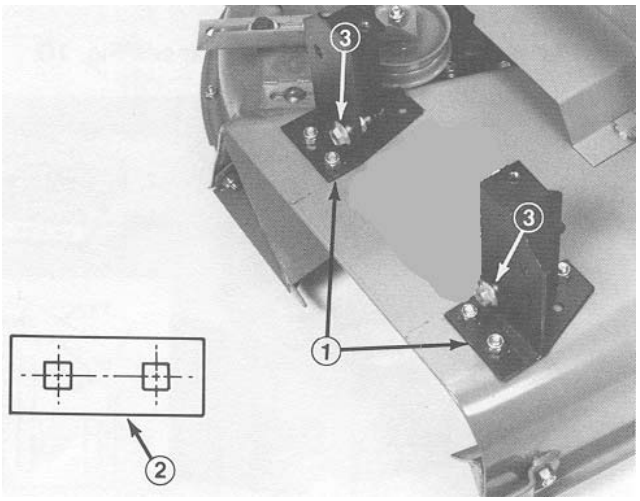

Figure 11

1. Blower mounting brackets
2. Bracket plate
3. Alignment bolts

2. Making sure no air gap exists between blower and cutting deck, secure each bracket to deck with a bracket plate (Fig. 11, inset), (2) 5/16 –18 x 3/4" lg. carriage bolts and locknuts. Position bracket plates between bolt head and bottom side of deck.

3. Using each bracket as a template, mark location of third mounting hole (left rear position) See Fig. 12.

4. Remove (2) knobs securing blower to mounting brackets. Remove blower.

5. Drill a 3/8" dia. hole for each bracket and secure with a 5/16 –18 x 3/4" lg. capscrew and locknut (Fig. 12).

6. Route belt around small spindle pulley.

7. Slide blower onto mounting bracket alignment bolts (Fig. 11) while routing belt around blower pulley.

Note: If blower assembly does not easily slide onto mounting brackets, loosen alignment bolts slightly.

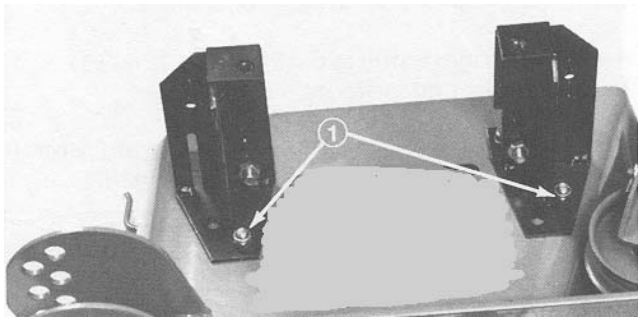

Figure 12

1. Left rear mounting hole

8. Secure blower to brackets with (2) knobs.

Install Idler Assembly

1. Position idler assembly on deck; see Fig. 13.

2. Using dimensions shown in Fig. 13, Inset, locate, mark and drill (3) 3/8" dia. holes in deck.

3. Engage idler lever (toward belt) and slide idler pulley firmly into blower belt. To provide for future adjustment, there should be at least 1/4" clearance between front of idler mounting bracket and raised rib in deck (Fig. 13, inset.) Mounting bracket should be positioned on flat part of deck. Make sure idler pulley clears spindle pulley and blower and idler lever clears carrier frame when in the engaged position. Mounting bracket should be at approximately 15° to deck rib (Fig. 13, inset).

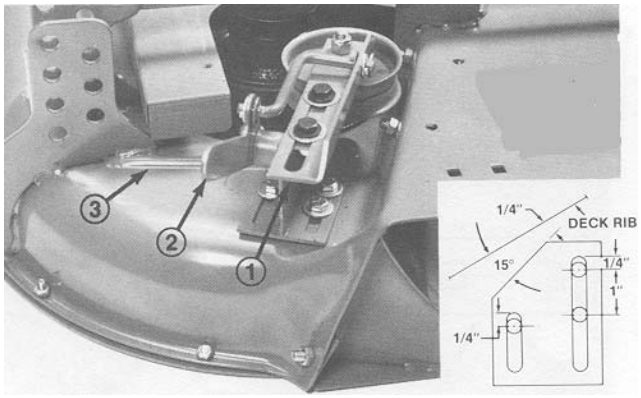

Figure 13

1. Idler assembly
2. Idler lever
3. Raised rib in deck

4. Disengage idler lever and mount idler assembly to deck with (3) 5/16 –18 x 3/4" lg. capscrew, 5/16 washers and locknut. Position washer between nut and idler assembly.

5. Engage idler lever and check belt tension. Adjust if necessary.

Install Counterbalance Spring Kit

The 52” Counterbalance Spring Kit, Part No. 70–8092 must be installed before operating the blower kit.

1. Install mounting bracket to front of traction unit using mounting holes shown in figure. 14.

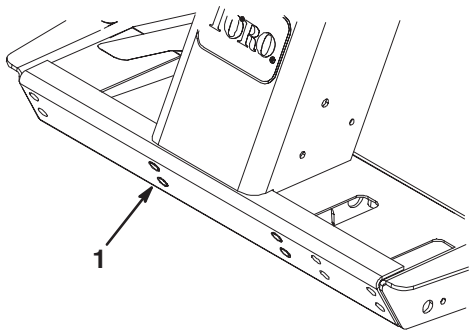

Figure 14

1. Use this set of mounting holes for bracket

2. Install counterbalance spring assembly to mounting bracket with lock pins.
3. Install new belt cover and latch in place.
4. Using dimensions shown in figure 15, locate mounting position for spring bracket on cutting deck. Bracket to be parallel and positioned 1/16” from front edge of belt cover.
5. Using spring bracket as a template, mark and drill (2) 9/32” dia. holes in cutting deck.
6. Secure spring bracket to deck with (2) 1/4–20 x 3/4” lg. capscrews and locknuts.

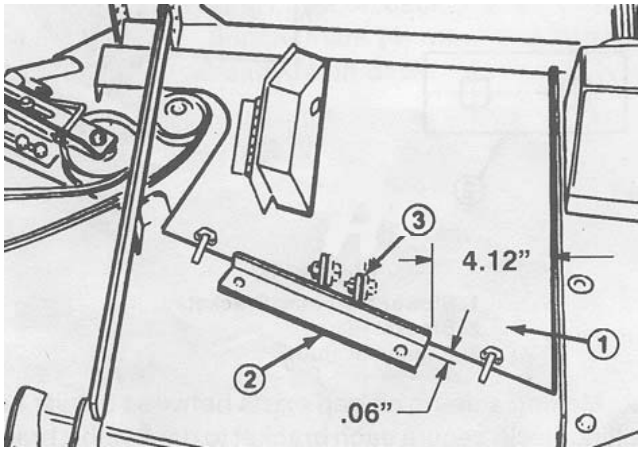

Figure 15

1. New belt cover
2. Spring bracket
3. Use this mounting bracket

Install Cutting Unit To Traction Unit

1. Engage parking brake, assure traction pedal is in neutral and PTO lever is in OFF position. Start engine and raise frame. Stop engine.
2. Remove clevis pins and hairpin cotters from forward and rear height–of–cut brackets.
3. Position cutting unit under frame. Align gear case input shaft with PTO shaft and install the shaft.
4. Carefully lower carrier frame. Align PTO shaft hole with gear case input shaft hole and install roll pin. Tighten bolts and locknuts.
5. Install clevis pins through desired holes in frame and desired height–of–cut bracket holes. Secure clevis pins with hairpin cotters.
6. Start engine and raise frame. Secure counterbalance spring knee link to cutting unit spring bracket with shoulder bolt and locknut previously removed (Fig. 16). Make sure to mount counterbalance to proper tab on cutting unit spring bracket (Fig. 15).

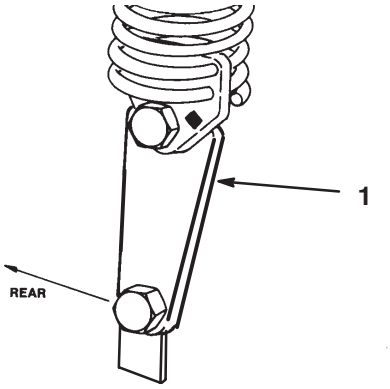

Figure 16

1. Counterbalance spring knee link
2. Deck mounting bracket

Install Bumper

1. Place cutting unit in highest height–of–cut position; refer to cutting unit Operator’s manual.
2. On right side of carrier frame, remove (2) forward 1/2 – 13 x 1–1/2” lg. capscrews securing carrier frame to lift arm (Fig. 17). Align rear of bumper with the two holes, center punch and drill (2) 13/32” dia. holes for the front bumper bracket in the carrier frame channel.
3. Mount bumper and secure with (2) 1/2 – 13 x 1–1/2” lg. capscrews at lift arm / carrier frame connection and (2) 3/8 – 16 x 1” lg, capscrews and 3/8 – 16 flange locknuts at the front bracket location. Torque the 1/2 – 13 x 1–1/2” lg. capscrews to 70–80 ft–lb (Fig. 17).

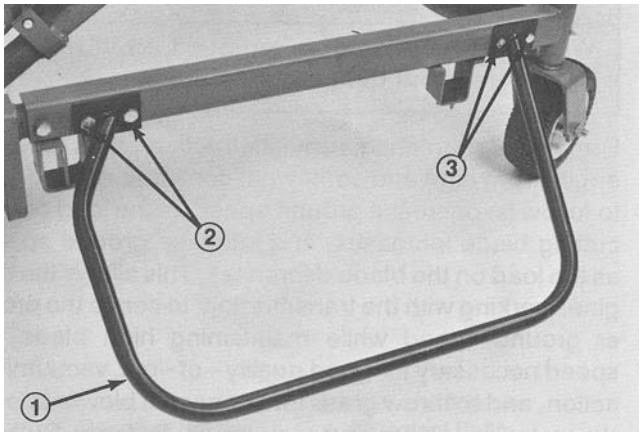

Figure 17

1. Bumper
2. 1/2 x 1–1/2" lg. capscrews
3. 3/8 x 1" lg. capscrews & flange locknuts

Install New Decal

Install warning decal to cutter deck either just under the right hand carrier frame member or just inside it.

Mount Blower Housing Chute

Important When the chute in the Blower Kit is used with a 15 cubic foot Hopper Kit, you must cut off a section of the chute to assure proper fit between the blower and the hopper. If used with another kit, proceed to step 3.

1. Using dimensions shown in Figure 18, use a tape measure and mark the chute.

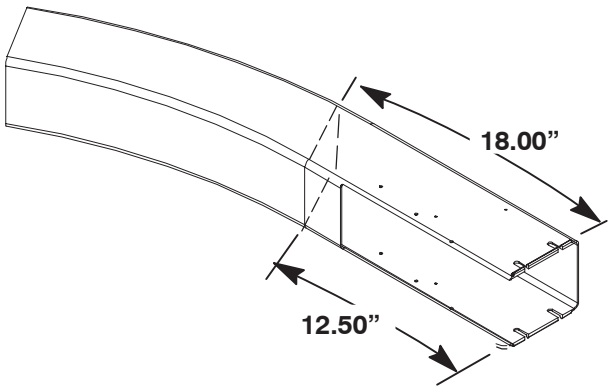

Figure 18

2. Draw lines around all sides of the chute and cut off with a saw.

3. Set deck into desired height–of–cut setting.

4. Slide chute over blower opening and onto mounting studs (Fig. 19).

5. Lower hopper hood and align chute with hood snout. Secure chute in position with (4) 5/16 locknuts and chute brackets. Wide end of brackets to be positioned to rear.

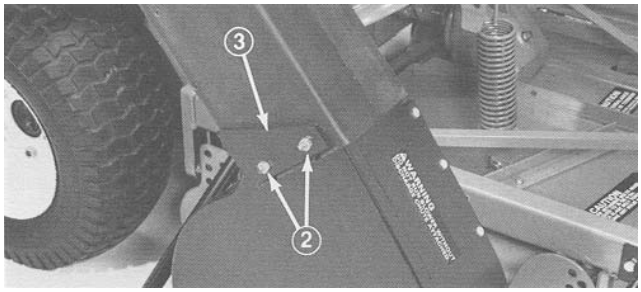

Figure 19

1. Chute
2. Mounting stud
3. Chute brackets

Operation

Operating Characteristics

(When used with a 15 cu. ft. Hopper kit)

Caution

When grass collector is removed, never operate without deflector in place.

For best performance, regulate traction pedal to keep engine rpm high and somewhat constant. A good rule to follow is: decrease ground speed as the load on the cutting blade increases; and increase ground speed as the load on the blade decreases. This allows the engine, working with the transmission, to sense the proper ground speed while maintaining high blade tip speed necessary for good quality–of–cut, vacuuming action, and to throw grass into hopper. If blower speed drops too low, plugging may result. Refer to Cutting Unit and Traction Unit Operator's Manual for operation of each.

Caution

Use care to avoid collision between hopper and any stationary objects. Always trim with left side of cutting unit.

1. This grass collector is designed for use in wet or dry conditions. Do not collect extremely long grass as the hopper will fill too quickly.
2. When bagging wet, heavy grass, some clippings may not be thrown completely through the chute. The hole in the bottom of the chute allows these clippings to drop out without plugging the chute. When this happens, reduce ground speed.
3. The bumper which protects the blower housing doesn't extend far enough to eliminate the chance of the bagger striking a stationary object. Stay far enough away from obstructions to avoid collisions. Trim with left side of cutting unit only.
4. The grass deflector hood is designed to exhaust air beside the the hopper rather than through it. This allows the hopper to fill completely without decreasing performance. Grass will fall through the opening in the front of the hood when the hopper is full. Immediately disengage the power take off, set brake and shut off ignition. Empty the hopper. Failure to empty the hopper will plug the chute.
5. Optional Hi–sail blades (Toro part no. 44–5480) will give improved performance in wet cutting conditions.

Danger

Never place hands or feet in chute, blower, or cutting unit.

6. Cut grass often, especially when it grows rapidly. If shorter turf is desired, cut the grass again. Overlap the swaths to produce an even cutting pattern.

Blower Removal

1. Shut engine off, disengage idler unlatch and open belt cover and lift belt off spindle pulley. Close cover. Remove (2) knobs securing blower to mounting brackets and remove blower, belt and chute.
2. Reverse procedure to reinstall blower assembly.

Using Grass Deflector

1. Remove bumper from carrier frame. Reinstall (2) lift arm/carrier frame connection capscrews. Torque to 70 – 80 ft – Ib .
2. Slide grass deflector and pivot brackets onto alignment bolts and secure to mounting brackets with knobs and washers. Lift deflector and allow it to drop to check spring tension.

Note: If blower assembly or grass deflector do not easily slide on or off mounting brackets, loosen alignment bolts slightly.

Caution

When grass collector is removed, never operate without deflector in place.

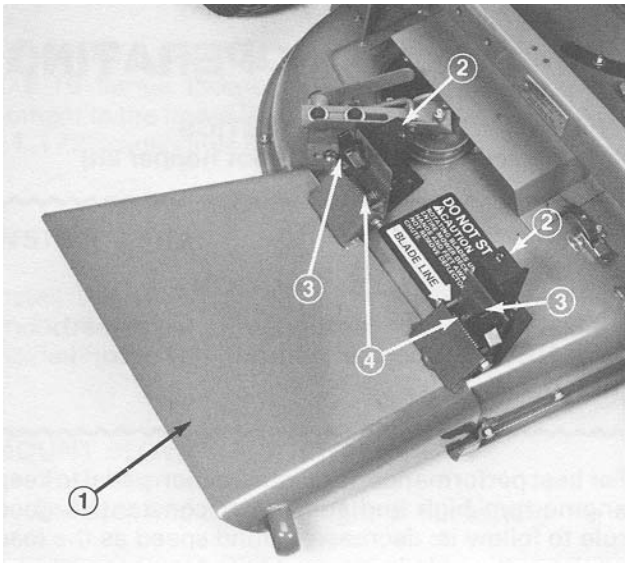

Figure 20

1. Grass deflector
2. Mounting bracket
3. Knob & washer
4. Alignment knobs

Maintenance

- Keep unit clean. Assure engine is free of dirt and chaff. Make sure all fasteners are tight. Check deflectors, baffles and shields for wear and replace as needed.
- Check blower gearbox impeller for tightness every 50 hours. Torque impeller shaft bolt to 220 to 230 in.-lbs.
- Clean grass clippings from hood, chute, blower and cutting unit after each use. Wash underside of cutting unit daily with hose. An excessive buildup of clippings will impair collection system performance.
- Check belt tension and wear every 50 hours. To adjust belt tension, loosen idler mounting screws, engage idler lever and push idler pulley firmly into blower belt. Tighten mounting screws.
- The blower gear box should need little maintenance. Check for leakage every 50 hours. If leakage should occur, replace seals and refill with 2 oz. of high quality moly disulfide grease. Repack bearings with this grease before assembling.
- Refer to Cutting Unit and Traction Unit Operator's Manuals for service requirements of each.

Notes

Notes

Notes

Toro General Commercial Products Warranty

A Two-Year Limited Warranty

Conditions and Products Covered

The Toro Company and its affiliate, Toro Warranty Company, pursuant to an agreement between them, jointly warrant your Toro Commercial Product ("Product") to be free from defects in materials or workmanship for two years or 1500 operational hours*, whichever occurs first. This warranty is applicable to all products with the exception of Aerators (refer to separate warranty statements for these products). Where a warrantable condition exists, we will repair the Product at no cost to you including diagnosis, labor, parts, and transportation. This warranty begins on the date the Product is delivered to the original retail purchaser.

** Product equipped with hour meter*

Instructions for Obtaining Warranty Service

You are responsible for notifying the Commercial Products Distributor or Authorized Commercial Products Dealer from whom you purchased the Product as soon as you believe a warrantable condition exists. If you need help locating a Commercial Products Distributor or Authorized Dealer, or if you have questions regarding your warranty rights or responsibilities, you may contact us at:

Toro Commercial Products Service Department
Toro Warranty Company
8111 Lyndale Avenue South
Bloomington, MN 55420-1196
952-888-8801
E-mail: commercial.warrnty@toro.com

Owner Responsibilities

As the Product owner, you are responsible for required maintenance and adjustments stated in your *Operator's Manual*. Failure to perform required maintenance and adjustments can be grounds for disallowing a warranty claim.

Items and Conditions Not Covered

Not all product failures or malfunctions that occur during the warranty period are defects in materials or workmanship. This warranty does not cover the following:

- Product failures which result from the use of non-Toro replacement parts, or from installation and use of add-on, or modified non-Toro branded accessories and products. A separate warranty may be provided by the manufacturer of these items.
- Product failures which result from failure to perform recommended maintenance and/or adjustments. Failure to properly maintain your Toro product per the Recommended Maintenance listed in the *Operator's Manual* can result in claims for warranty being denied.
- Product failures which result from operating the Product in an abusive, negligent or reckless manner.
- Parts subject to consumption through use unless found to be defective. Examples of parts which are consumed, or used up, during normal Product operation include, but are not limited to, brakes pads and linings, clutch linings, blades, reels, bed knives, tines, spark plugs, castor wheels, tires, filters, belts, and certain sprayer components such as diaphragms, nozzles, and check valves, etc.
- Failures caused by outside influence. Items considered to be outside influence include, but are not limited to, weather, storage practices, contamination, use of unapproved coolants, lubricants, additives, fertilizers, water, or chemicals, etc.
- Normal noise, vibration, wear and tear, and deterioration.
- Normal "wear and tear" includes, but is not limited to, damage to seats due to wear or abrasion, worn painted surfaces, scratched decals or windows, etc.

Parts

Parts scheduled for replacement as required maintenance are warranted for the period of time up to the scheduled replacement time for that part. Parts replaced under this warranty are covered for the duration of the original product warranty and become the property of Toro. Toro will make the final decision whether to repair any existing part or assembly or replace it. Toro may use remanufactured parts for warranty repairs.

Note Regarding Deep Cycle Battery Warranty:

Deep cycle batteries have a specified total number of kilowatt-hours they can deliver during their lifetime. Operating, recharging, and maintenance techniques can extend or reduce total battery life. As the batteries in this product are consumed, the amount of useful work between charging intervals will slowly decrease until the battery is completely worn out. Replacement of worn out batteries, due to normal consumption, is the responsibility of the product owner. Battery replacement may be required during the normal product warranty period at owner's expense.

Maintenance is at Owner's Expense

Engine tune-up, lubrication cleaning and polishing, replacement of filters, coolant, and completing Recommended Maintenance are some of the normal services Toro products require that are at the owner's expense.

General Conditions

Repair by an Authorized Toro Distributor or Dealer is your sole remedy under this warranty.

Neither The Toro Company nor Toro Warranty Company is liable for indirect, incidental or consequential damages in connection with the use of the Toro Products covered by this warranty, including any cost or expense of providing substitute equipment or service during reasonable periods of malfunction or non-use pending completion of repairs under this warranty. Except for the Emissions warranty referenced below, if applicable, there is no other express warranty. All implied warranties of merchantability and fitness for use are limited to the duration of this express warranty.

Some states do not allow exclusions of incidental or consequential damages, or limitations on how long an implied warranty lasts, so the above exclusions and limitations may not apply to you. This warranty gives you specific legal rights, and you may also have other rights which vary from state to state.

Note regarding engine warranty:

The Emissions Control System on your Product may be covered by a separate warranty meeting requirements established by the U.S. Environmental Protection Agency (EPA) and/or the California Air Resources Board (CARB). The hour limitations set forth above do not apply to the Emissions Control System Warranty. Refer to the Engine Emission Control Warranty Statement printed in your *Operator's Manual* or contained in the engine manufacturer's documentation for details.

Countries Other than the United States or Canada

Customers who have purchased Toro products exported from the United States or Canada should contact their Toro Distributor (Dealer) to obtain guarantee policies for your country, province, or state. If for any reason you are dissatisfied with your Distributor's service or have difficulty obtaining guarantee information, contact the Toro importer.

Part No. 374-0031 Rev. D