Form No. 3350–959 Rev C

TORO®

Finger Deck

Versa Vac

Model No. 07081—Serial No. 240000001 and Up

Operator's Manual

CE

English (EN)

Contents

	Page
Introduction	2
Safety	3
Before Operating	3
While Operating	3
Maintenance	3
Safety and Instruction Decals	4
Specifications	5
General Specifications	5
Setup	6
Mount Finger Deck	6
Before Operating	7
Check Tire Pressure	7
Adjust Operating Height	7
Operation	8
Tips	8
Inspection And Cleanup After Operation	8
Maintenance	9
Greasing the Deck	9
Adjusting the Drive Belt	9
Replacing Finger Belts	10
The Toro General Commercial Products Warranty	12

Introduction

Read this manual carefully to learn how to operate and maintain your product properly. The information in this manual can help you and others avoid injury and product damage. Although Toro designs and produces safe products, you are responsible for operating the product properly and safely.

Whenever you need service, genuine Toro parts, or additional information, contact an Authorized Service Dealer or Toro Customer Service and have the model and serial numbers of your product ready.

Write the product model and serial numbers in the space below:

Model No. _____

Serial No. _____

This manual identifies potential hazards and has special safety messages that help you and others avoid personal injury and even death. ***Danger***, ***Warning***, and ***Caution*** are signal words used to identify the level of hazard. However, regardless of the hazard, be extremely careful.

Danger signals an extreme hazard that *will* cause serious injury or death if you do not follow the recommended precautions.

Warning signals a hazard that *may* cause serious injury or death if you do not follow the recommended precautions.

Caution signals a hazard that may cause minor or moderate injury if you do not follow the recommended precautions.

This manual uses two other words to highlight information. **Important** calls attention to special mechanical information and **Note:** emphasizes general information worthy of special attention.

© 2001 by The Toro Company

8111 Lyndale Avenue South
Bloomington, MN 55420-1196

All Rights Reserved

Printed in the USA

Safety

Hazard control and accident prevention are dependent upon the awareness, concern, and proper training of the personnel involved in the operation, transport, maintenance, and storage of the machine. Improper use or maintenance of the machine can result in injury or death. To reduce the potential for injury or death, comply with the following safety instructions.

Before Operating

- Read and understand the contents of this Operator's Manual before operating the machine. Become familiar with all of the controls and know how to stop quickly. A free replacement manual is available by sending the complete Model and Serial Number to The Toro Company, 8111 Lyndale Avenue South, Bloomington, Minnesota 55420-1196.
- Never allow children to operate the machine. Do not allow adults to operate machine without proper instruction. Only trained operators who have read this manual should operate this machine.
- Never operate the machine when under the influence of drugs or alcohol.
- Keep all bystanders away from the operating area.
- Keep all shields and safety devices in place. If a shield, safety device, or decal is illegible or damaged, repair or replace it before operation is commenced. Also tighten any loose nuts, bolts, and screws to ensure that the machine is in safe operating condition.
- Do not operate the machine while wearing sandals, tennis shoes, sneakers, or shorts. Also, do not wear loose fitting clothing which could get caught in moving parts. Always wear long pants and substantial shoes. Wearing safety glasses, safety shoes, and a helmet is advisable and required by some local ordinances and insurance regulations.

While Operating

- This product may exceed noise levels of 85 dB(A) at the operator position. Hearing protection is recommended for prolonged exposure to reduce the potential of permanent hearing damage.
- Using the machine demands attention. To prevent loss of control:
  - Operate only in daylight or when there is good artificial light.
  - Drive slowly and watch for holes or other hidden hazards.
  - Do not drive close to a sand trap, ditch, creek, or other hazard.
  - Reduce your speed when making sharp turns and when turning on hillsides.
  - Avoid sudden starts and stops.
  - Before backing up, look to the rear and ensure that no one is behind the machine.
  - Watch out for traffic when near or crossing roads. Always yield the right-of-way.
- The rubber fingers pick up and propel debris and small objects in its path during operation. Always wear eye and head protection to avoid possible injury from flying objects, and keep children, pets, and bystanders well away from the area of operation.
- Never carry passengers on prime mover or allow anyone to ride in trailer.
- Do not step over P.T.O. shaft to get to other side of machine. Walk around trailer.
- Never get on or off prime mover with P.T.O. shaft engaged.
- Always stand to extreme right or left side of trailer when opening rear door.
- **Do not take an injury risk!** When a person or pet appears unexpectedly in or near the operating area, **stop operation**. Careless operation, combined with terrain angles, ricochets, or improperly positioned guards can lead to thrown object injuries. Do not resume operation until the area is cleared.

Maintenance

- Remove the key from the ignition switch to prevent accidental starting of the engine when servicing, adjusting, or storing the machine.
- Perform only those maintenance instructions described in this manual. If major repairs are ever needed or assistance is desired, contact an Authorized Toro Distributor.
- Be sure that the machine is in safe operating condition by keeping nuts, bolts, and screws tight. Check all bolts and nuts frequently to be sure that they are tightened to specification.
- To ensure optimum performance and safety, always purchase genuine Toro replacement parts and accessories to keep the machine all Toro. **Never use "will-fit" replacement parts and accessories made by other manufacturers.** Look for the Toro logo to ensure genuineness. Using unapproved replacement parts and accessories could void the warranty.

Safety and Instruction Decals

Safety decals and instructions are easily visible to the operator and are located near any area of potential danger. Replace any decal that is damaged or lost.

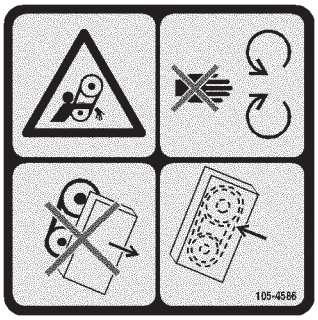

105-4586

1. Entanglement hazard, belt—stay away from moving parts. Do not operate the machine with the shields or guards removed; keep the shields and guards in place.



106-0177



106-0178

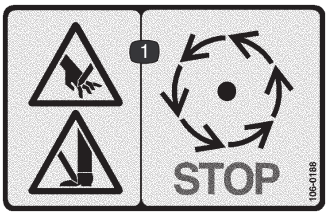

106-0188

1. Cutting hazard of hand or foot—wait for moving parts to stop.

Specifications

General Specifications

General Description	The Finger Deck is used with the Toro Versa Vac. The primary function is to facilitate debris removal from large turf areas.
Main Frame	One piece–welded frame of 10 and 12 gauge formed steel.
Support	Four casters with adjustable height Six 1/2 inch spacers per caster (3 inch of adjustment by 1/2 inch intervals). Four pneumatic 4.1 – 4 NHS 2–ply tires.
Finger Rotor	One piece welded base weldment. 1 inch diameter shaft inside of a 2 in square tube with 3/16 wall. 88 rubber fingers 6 in long. Operates @ 1100 rpm ± 100 rpm.
Motor	Hydraulic gear motor .9 CID, with over hung load package.
Drive	Belt drive from motor to rotor shaft (3–3vx). Drive ratio: 1.3 : 1 Love Joy torsion type belt tensioner with stabilizer bracket.
Deck Width	78 inch ± 2 inch over all (72 inch operating width)
Deck Height	20 inch ± 4 inch
Weight	283 lb. ± 25 lb.

Note: Specifications and design subject to change without notice.

Setup

Note: Use this chart as a checklist to ensure that all parts have been received. Without these parts, total setup cannot be completed.

Description	Qty.	Use
Operator's Manual	1	Read before operating the machine.
Parts Catalog	1	
Registration card	1	Fill out and return to Toro.

Mount Finger Deck

1. Roll the deck under the Versa Vac. Make sure hydraulic motor is on the left side.
2. Slide the tow arms onto the frame pins. Secure each tow arm to frame pin with a washer and hair pin cotter (Fig. 1).



Figure 1

1. Tow arm

3. Connect each lift chain to a deck bracket with a clevis pin and hair pin cotter (Fig. 2).



Figure 2

1. Lift chain

4. Install canvas ring around the lip on the Versa Vac and deck openings (Fig. 3).



Figure 3

1. Canvas ring

5. Connect hydraulic motor hose quick couplers to the Versa Vac couplers as shown in figures 4.

Note: Verify rotation of fingers. Fingers should rotate clockwise (as viewed from motor end of deck).

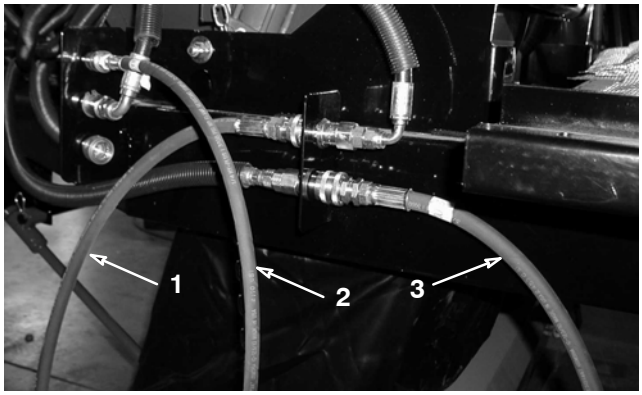

Figure 4

1. Motor hose –front
2. Motor hose –center
3. Motor hose –rear

Note: If deck is not level when it is raised off the ground, reposition lift chain in another mounting hole in bracket.

Before Operating

Note: Determine the left and right sides of the machine from the normal operating position.

Check Tire Pressure

The correct tire pressure for the castor wheels is 30 psi.

Adjust Operating Height

1. Remove the clevis pin from the spindle shaft (Fig. 5).

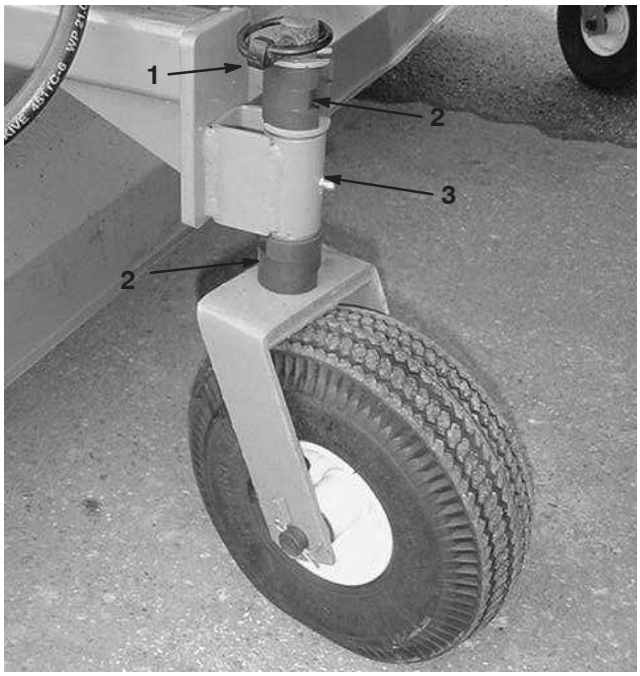

Figure 5

1. Clevis pin
2. Spacer
3. Caster arm

2. Remove or add ”C” shaped spacers to the spindle shaft, below the castor arm, to get the desired height.
3. Place all remaining spacers on the spindle shaft above the caster arm.
4. Install the clevis pin to secure the assembly.
5. Ensure that all four castor wheels are set at the same height.

Operation

Note: Determine the left and right sides of the machine from the normal operating position.

Tips

- Before starting to sweep, survey area to determine the best direction to sweep.
- To maintain a straight line when sweeping, sight of an object in the foreground.
- Always try to make a long, continuous run with a slight overlap on the return run.
- On turf areas, the deck will pick up twigs, clippings, leaves, pine needles and pine cones and small debris.

Important Do not make sharp turns when using the finger deck as damage to turf may occur.

Important Do not operate finger deck while rotor is turning and in the raised position.

Inspection And Cleanup After Operation

When operation has been completed, thoroughly clean and wash the deck. After cleaning, it is recommended that the machine be inspected for possible damage to all mechanical components. These procedures will assure that the machine will perform satisfactorily during next use.

Maintenance

Note: Determine the left and right sides of the machine from the normal operating position.

Greasing the Deck

The deck has 10 grease fittings that must be lubricated regularly with No. 2 General Purpose Lithium Base Grease.

The grease fitting locations and quantities are:

- Caster wheel (2 ea.) (Fig. 6)
- Finger rotor bearings (2) (Fig. 7)

Important Lubricating the deck immediately after washing helps purge water out of the bearings and increases bearing life.

1. Wipe each grease fitting with a clean rag.
2. Wipe excess grease away.

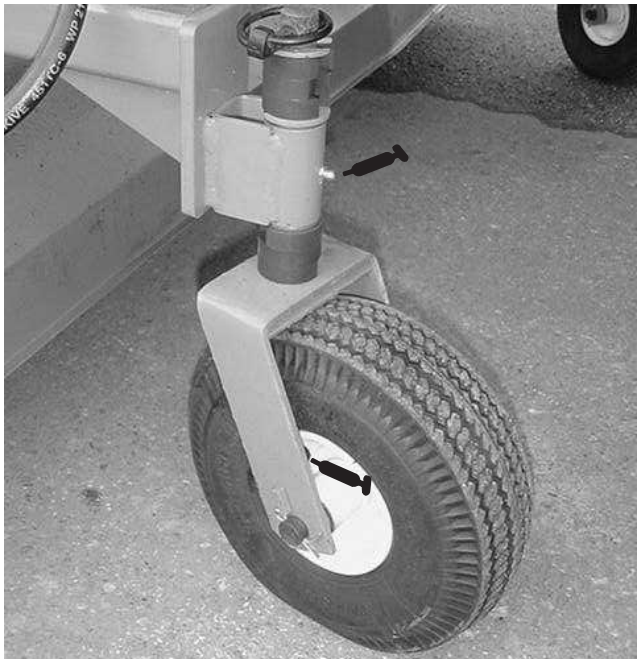

Figure 6

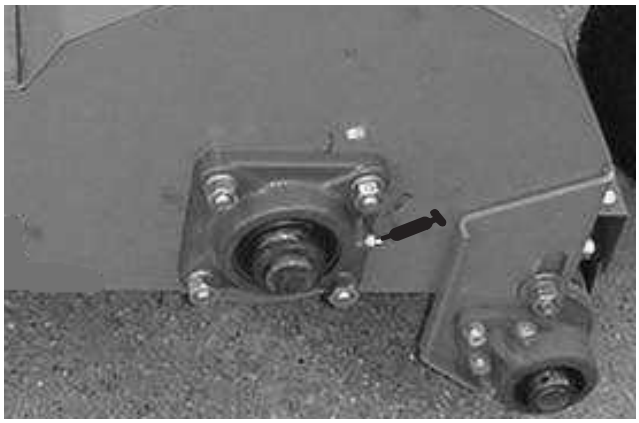

Figure 7

Adjusting the Drive Belt

Make sure belt is properly tensioned to ensure proper operation of the machine and unnecessary wear. Check belt frequently.

Note: Check/adjust the belt tension after the first 20 hours of operation.

1. Remove the fasteners securing the motor shield to the deck frame (Fig. 8). Remove the shield.

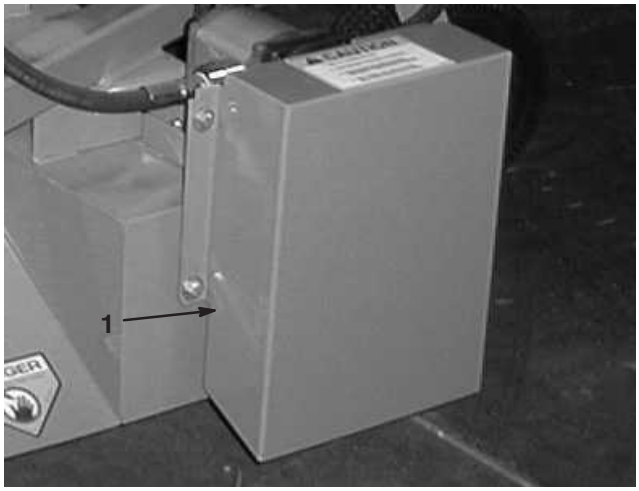

Figure 8

1. Drive shield

2. On back side of frame, loosen capscrew securing belt tensioner to frame (Fig. 9).

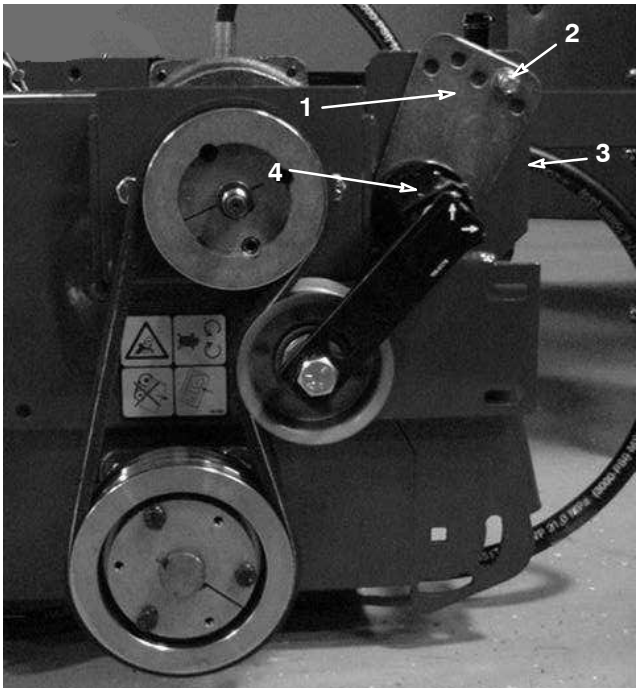

Figure 9

1. Tensioner guide
2. Capscrew & nut
3. Capscrew (back of frame)
4. Tensioner

3. Remove capscrew and nut securing tensioner guide to drive mount (Fig. 9). Belt tension will be released when capscrew is removed.
4. Position a large wrench on tensioner. Rotate tensioner clockwise until decal is aligned with 15° on tensioner tube.
5. Insert capscrew into aligned guide holes and secure with nut. If holes are not exactly aligned, rotate guide to the next higher hole until aligned.
6. Tighten capscrew, on back side of frame to lock tensioner.
7. Install the motor shield with the fasteners previously removed.

Replacing Finger Belts

1. Loosen nuts and washers securing finger pinchers to rotor (Fig. 10 & 11).
2. Remove old belt fingers.
3. Install new belt fingers. Belt fingers to extend from finger pinchers approximately 4 inches (Fig. 10 & 11).
4. Tighten nuts securing assembly.

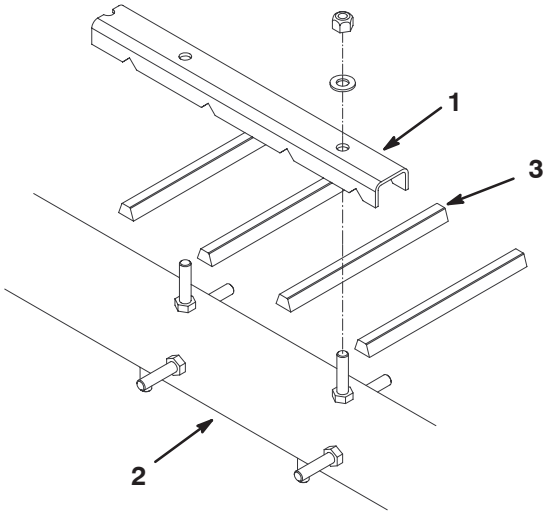

Figure 10

1. Finger pincher
2. Rotor
3. Belt finger

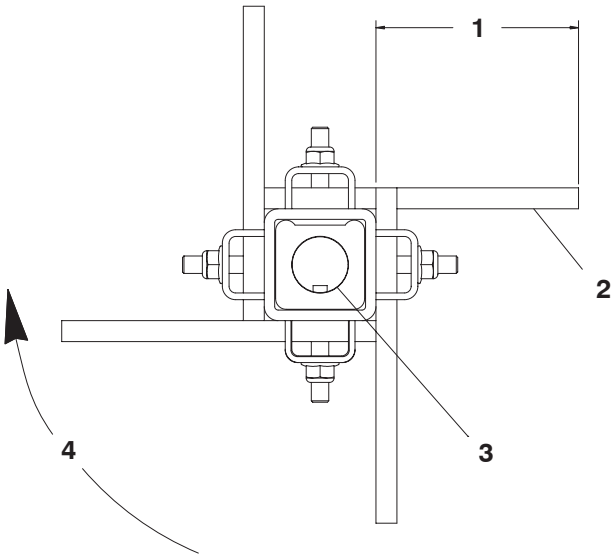

Figure 11

1. 3.63 inches
2. Flat side of belt
3. Keyed shaft
4. Brush rotation

Toro General Commercial Products Warranty

A Two-Year Limited Warranty

Conditions and Products Covered

The Toro Company and its affiliate, Toro Warranty Company, pursuant to an agreement between them, jointly warrant your Toro Commercial Product ("Product") to be free from defects in materials or workmanship for two years or 1500 operational hours*, whichever occurs first. This warranty is applicable to all products with the exception of Aerators (refer to separate warranty statements for these products). Where a warrantable condition exists, we will repair the Product at no cost to you including diagnosis, labor, parts, and transportation. This warranty begins on the date the Product is delivered to the original retail purchaser.

** Product equipped with hour meter*

Instructions for Obtaining Warranty Service

You are responsible for notifying the Commercial Products Distributor or Authorized Commercial Products Dealer from whom you purchased the Product as soon as you believe a warrantable condition exists. If you need help locating a Commercial Products Distributor or Authorized Dealer, or if you have questions regarding your warranty rights or responsibilities, you may contact us at:

Toro Commercial Products Service Department
Toro Warranty Company
8111 Lyndale Avenue South
Bloomington, MN 55420-1196
952-888-8801
E-mail: commercial.warrnty@toro.com

Owner Responsibilities

As the Product owner, you are responsible for required maintenance and adjustments stated in your *Operator's Manual*. Failure to perform required maintenance and adjustments can be grounds for disallowing a warranty claim.

Items and Conditions Not Covered

Not all product failures or malfunctions that occur during the warranty period are defects in materials or workmanship. This warranty does not cover the following:

- Product failures which result from the use of non-Toro replacement parts, or from installation and use of add-on, or modified non-Toro branded accessories and products. A separate warranty may be provided by the manufacturer of these items.
- Product failures which result from failure to perform recommended maintenance and/or adjustments. Failure to properly maintain your Toro product per the Recommended Maintenance listed in the *Operator's Manual* can result in claims for warranty being denied.
- Product failures which result from operating the Product in an abusive, negligent or reckless manner.
- Parts subject to consumption through use unless found to be defective. Examples of parts which are consumed, or used up, during normal Product operation include, but are not limited to, brakes pads and linings, clutch linings, blades, reels, bed knives, tines, spark plugs, castor wheels, tires, filters, belts, and certain sprayer components such as diaphragms, nozzles, and check valves, etc.
- Failures caused by outside influence. Items considered to be outside influence include, but are not limited to, weather, storage practices, contamination, use of unapproved coolants, lubricants, additives, fertilizers, water, or chemicals, etc.
- Normal noise, vibration, wear and tear, and deterioration.
- Normal "wear and tear" includes, but is not limited to, damage to seats due to wear or abrasion, worn painted surfaces, scratched decals or windows, etc.

Parts

Parts scheduled for replacement as required maintenance are warranted for the period of time up to the scheduled replacement time for that part. Parts replaced under this warranty are covered for the duration of the original product warranty and become the property of Toro. Toro will make the final decision whether to repair any existing part or assembly or replace it. Toro may use remanufactured parts for warranty repairs.

Note Regarding Deep Cycle Battery Warranty:

Deep cycle batteries have a specified total number of kilowatt-hours they can deliver during their lifetime. Operating, recharging, and maintenance techniques can extend or reduce total battery life. As the batteries in this product are consumed, the amount of useful work between charging intervals will slowly decrease until the battery is completely worn out. Replacement of worn out batteries, due to normal consumption, is the responsibility of the product owner. Battery replacement may be required during the normal product warranty period at owner's expense.

Maintenance is at Owner's Expense

Engine tune-up, lubrication cleaning and polishing, replacement of filters, coolant, and completing Recommended Maintenance are some of the normal services Toro products require that are at the owner's expense.

General Conditions

Repair by an Authorized Toro Distributor or Dealer is your sole remedy under this warranty.

Neither The Toro Company nor Toro Warranty Company is liable for indirect, incidental or consequential damages in connection with the use of the Toro Products covered by this warranty, including any cost or expense of providing substitute equipment or service during reasonable periods of malfunction or non-use pending completion of repairs under this warranty. Except for the Emissions warranty referenced below, if applicable, there is no other express warranty. All implied warranties of merchantability and fitness for use are limited to the duration of this express warranty.

Some states do not allow exclusions of incidental or consequential damages, or limitations on how long an implied warranty lasts, so the above exclusions and limitations may not apply to you. This warranty gives you specific legal rights, and you may also have other rights which vary from state to state.

Note regarding engine warranty:

The Emissions Control System on your Product may be covered by a separate warranty meeting requirements established by the U.S. Environmental Protection Agency (EPA) and/or the California Air Resources Board (CARB). The hour limitations set forth above do not apply to the Emissions Control System Warranty. Refer to the Engine Emission Control Warranty Statement printed in your *Operator's Manual* or contained in the engine manufacturer's documentation for details.

Countries Other than the United States or Canada

Customers who have purchased Toro products exported from the United States or Canada should contact their Toro Distributor (Dealer) to obtain guarantee policies for your country, province, or state. If for any reason you are dissatisfied with your Distributor's service or have difficulty obtaining guarantee information, contact the Toro importer.

Part No. 374-0031 Rev. D