FORM NO. 3316–590

TORO®

MODEL NO. 26640B–4900001 & UP

PARTS CATALOG

53cm REAR BAGGING MOWER

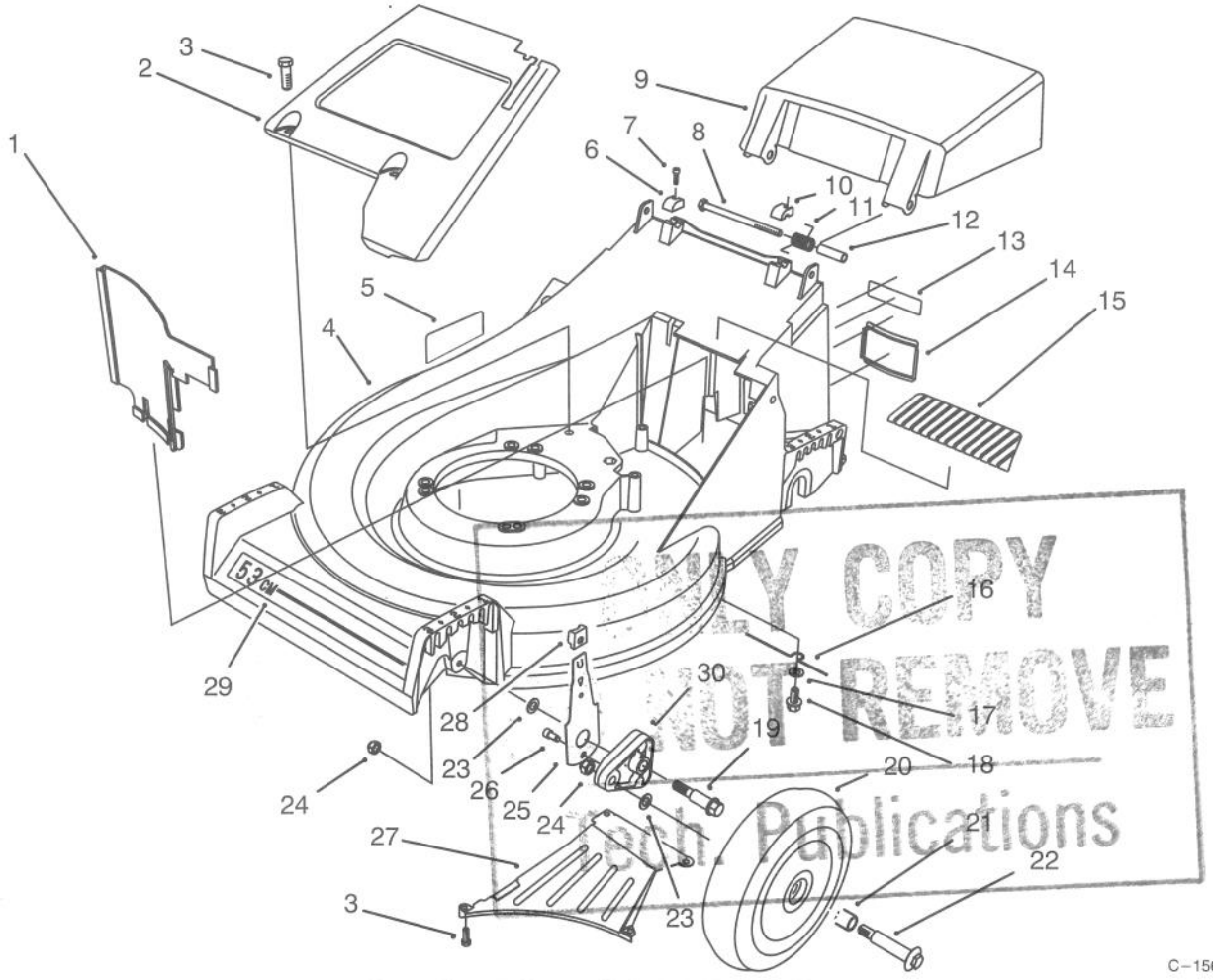

COPY
NOT REMOVE
Publications

C–1568A

HOUSING ASSEMBLY

Ref. No.	Part No.	Description	No. Used
1	66–0020	Panel – Vertical	1
2	65–5660	Panel – Screen	1
3	32144–70	Screw – Cap Hex. Hd.	6
4	16–1769	Housing – 53cm (Incl. Ref. #5 & 29)	1
5	92–9077	Decal – Danger	1
6	71–7910	Cap – Hinge Bolt R.H.	1
7	65–5210	Screw – Thread Forming	2
8	322–29	Screw – Hex Hd. Cap	2
9	71–9800	Door – Discharge	1
10	71–7900	Cap – Hinge Bolt L.H.	1
11	71–9840	Spring – Door	2
12	71–8580	Spacer – Door	2
13	66–0680	Decal – French Regulation	1
14	71–9650	Access – Cover	1
15	71–9920	Cover – Top	1

Ref. No.	Part No.	Description	No. Used
16	66–0620	Retainer – Belt	1
17	3256–24	Washer – Flat	1
18	32144–15	Screw – Hex Flange Hd.	1
19	66–0560	Screw – Shoulder	2
20	14–9949	Wheel & Tire Assembly (Incl. Ref. #21)	2
21	27–6250	Bushing – Wheel	4
22	27–6231	Bolt – Wheel	2
23	40–1940	Washer – Wheel Bolt	4
24	3296–6	Nut – Lock	4
25	66–0540	Arm – Spring Front	2
26	65–5220	Screw – Cap Socket Hd.	2
27	71–9640	Ramp – Discharge	1
28	25–7740	Knob – Arm	2
29	71–9870	Decal – Deck 53cm	1
30	66–0580	Arm – Pivot Front	2

© The TORO Company –1993
All Rights Reserved

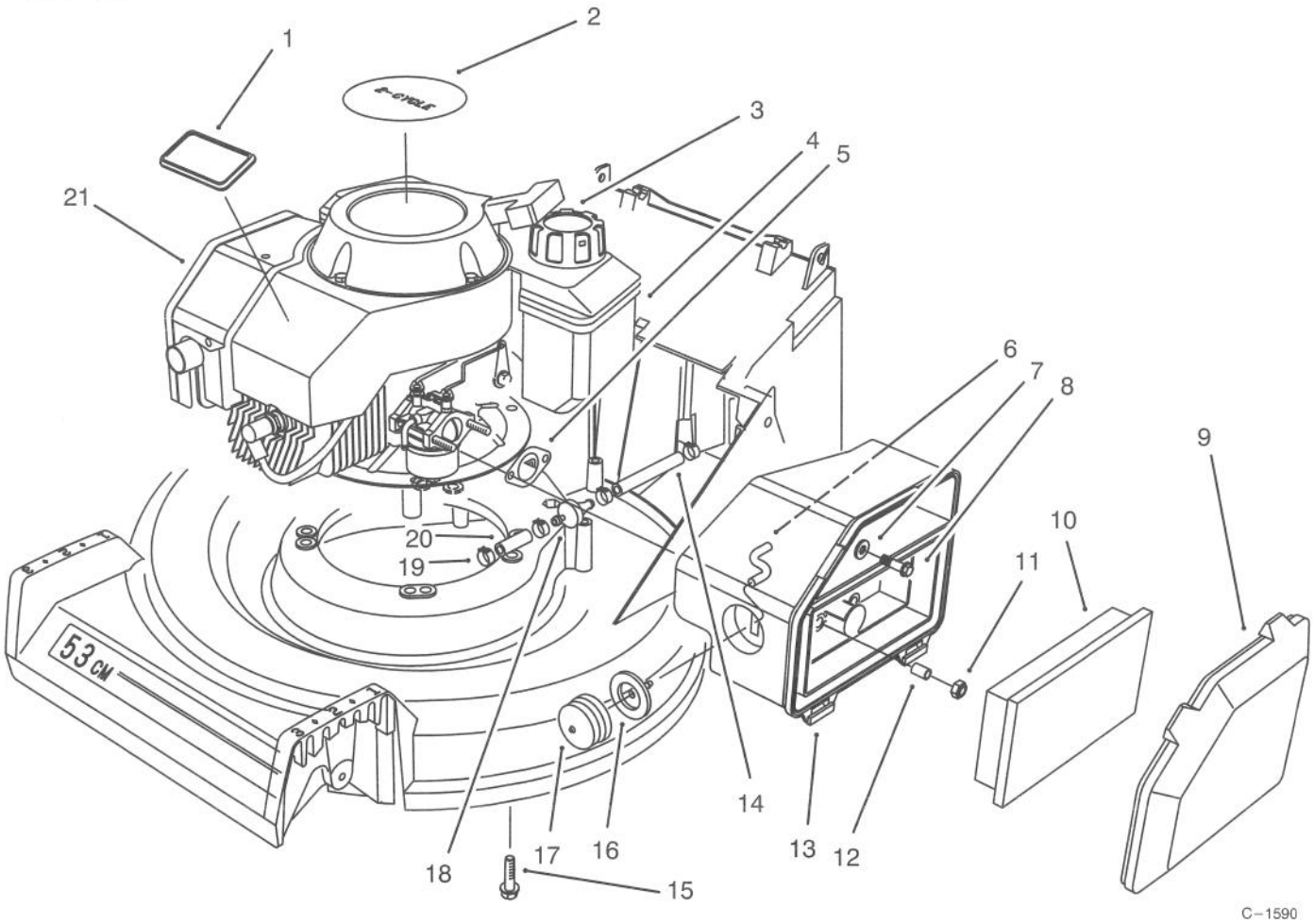

ENGINE ASSEMBLY

Ref. No.	Part No.	Description	No. Used
1	46–8290	Plate – Logo Toro	1
2	57–3110	Decal – Recoil	1
3	55–3575	Gas Cap Assembly	1
4	81–0162	Fuel Tank Assembly	1
5	81–0090	Gasket – Air Cleaner	1
6	44–3172	Hose – Primer	1
7	3256–16	Washer – Flat	1
8	51–2690	Screw – Hex Washer Hd.	1
9	63–9340	Cover – Air Cleaner	1
10	63–9380	Foam Element – Air Cleaner	1
11	50–7180	Nut – Lock	2

Ref. No.	Part No.	Description	No. Used
12	62–3980	Spacer	2
13	63–9330	Body – Air Cleaner	1
14	51–3215	Hose – Fuel	1
15	66–9301	Screw – Engine Mount	3
16	44–2750	Body – Primer	1
17	66–7460	Bulb – Primer	1
18	71–9280	Filter – Fuel	1
19	2412–95	Clamp – Hose	4
20	51–3216	Hose – Fuel	1
21	77–2800	Engine Complete	1

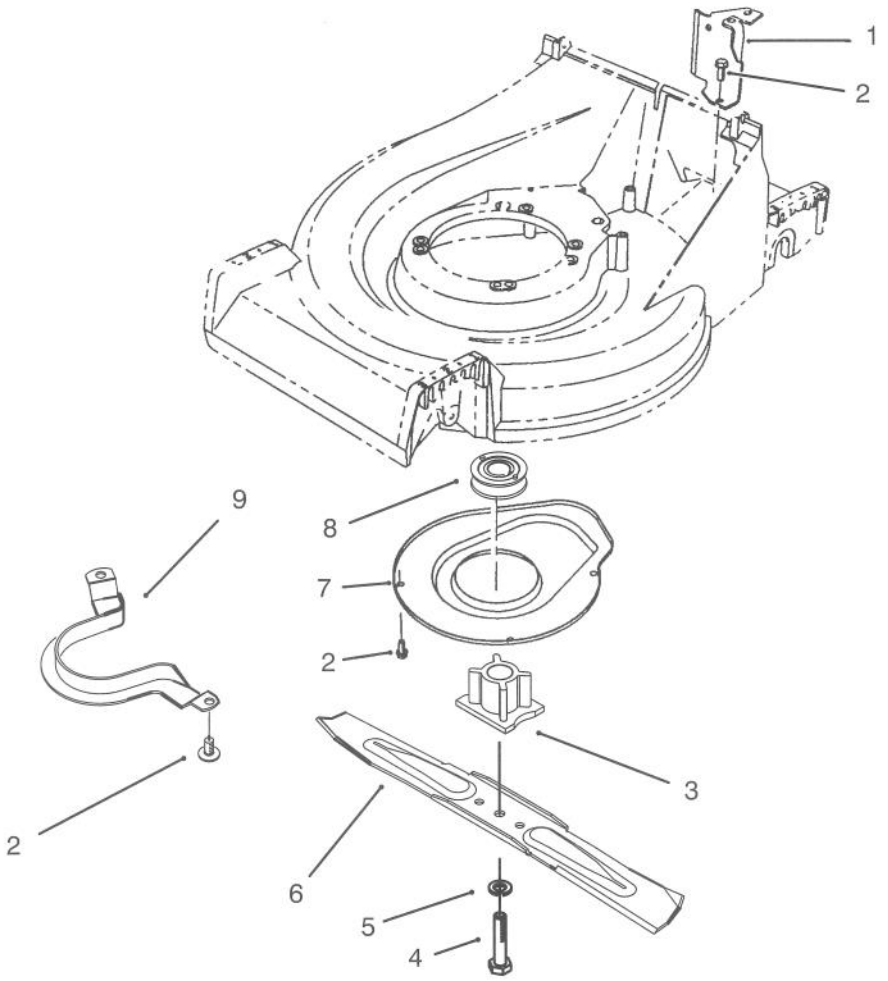

C–1591

BLADE ASSEMBLY

Ref. No.	Part No.	Description	No. Used
1	66–0030	Bracket – Cable Support	1
2	32144–70	Screw – Taptite	7
3	62–7540	Retainer – Blade	1
4	26–0670	Screw – Blade	1
5	3253–22	Washer – Lock	1

Ref. No.	Part No.	Description	No. Used
6	62–7700	Blade – 21"	1
7	65–5200	Shield – BBC	1
8	62–7550	Pulley – Drive	1
9	66–0570	Bracket – Belt Guide	1

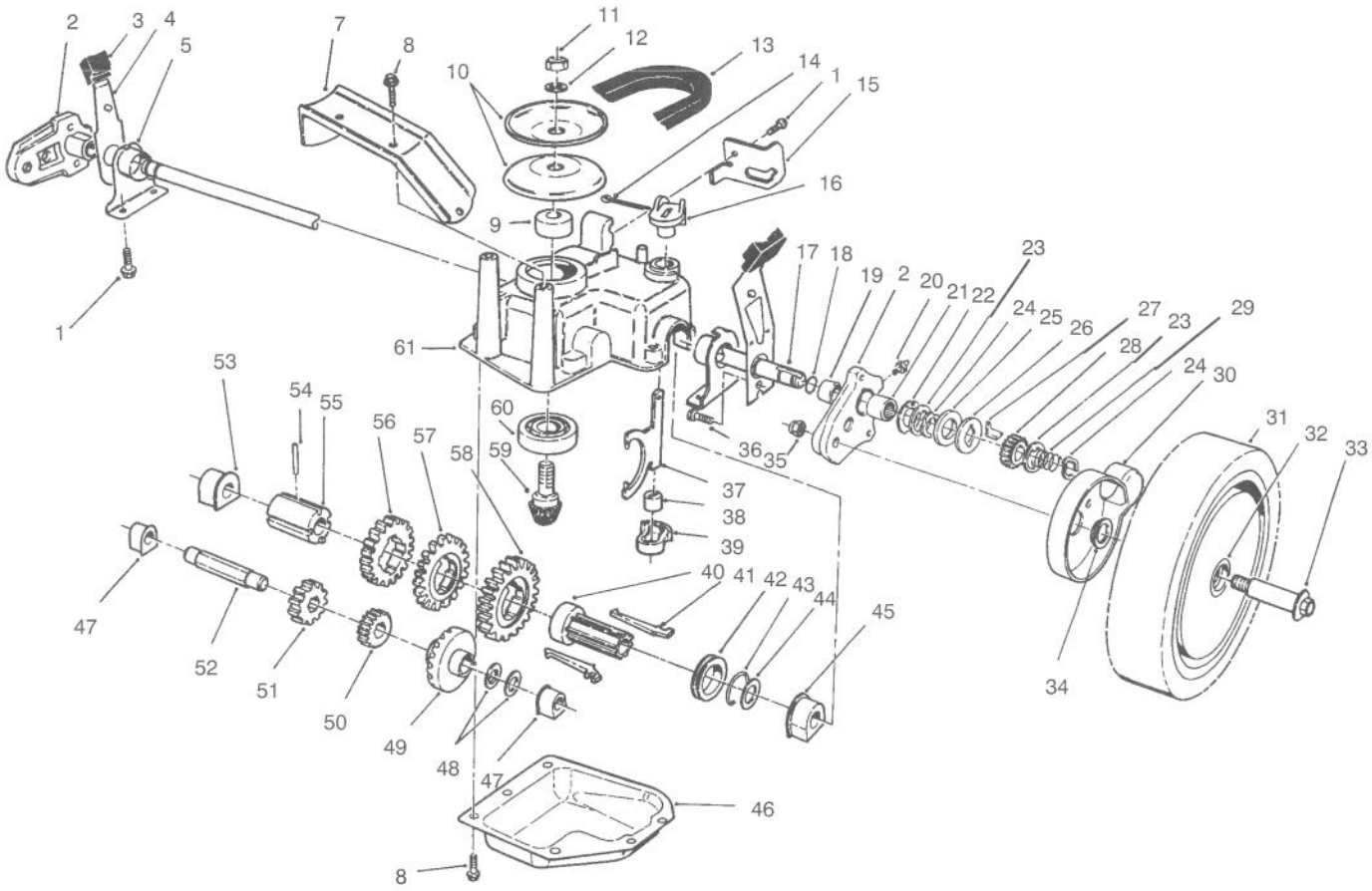

GEAR CASE ASSEMBLY

Ref. No.	Part No.	Description	No. Used
1	32144–70	Screw – Hex. Washer Hd.	5
2	65–5042	Pivot Arm Assembly (Incl. Ref. #19–21)	2
3	25–7740	Knob – Arm	2
4	65–5440	Spring Arm Assembly	2
5	66–0360	Cap – End	2
7	65–5190	Bracket – Belt Guide	1
8	49–2040	Screw – Self Tapping	8
9	62–6660	Spacer	1
10	60–8840	Pulley – Half	2
11	3296–5	Nut – Lock	1
12	3256–24	Washer – Flat	1
13	66–0210	V–Belt	1
14	3272–5	Pin – Cotter	1
15	76–2930	Retainer – Cable	1
16	76–0920	Lever – Shift	1
17	65–4770	Shaft – Output	1
18	237–153	Seal – "O"Ring	2
19	70–9760	Bushing – Sleeve	2
20	302–56	Fitting – Grease	2
21	48–2060	Bearing –Needle	2
22	65–4730	Washer – Thrust (Inner)	2
23	65–4740	Washer – Thrust (Keyed)	4

Ref. No.	Part No.	Description	No. Used
24	65–2720	Ring – Retaining	4
25	65–4710	Ring – Friction	2
26	65–4760	Washer –Clutch	2
27	66–6050	Key – Rocking (L.H.)	1
*	66–6040	Key – Rocking (R.H.)	1
28	65–4750	Pinion	2
29	65–4720	Spring – Compression	2
30	74–1660	Cover – Wheel	2
31	14–9959	Wheel Tire & Gear Assy. (Incl. Ref. #32)	2
32	27–6250	Bushing – Wheel	4
33	27–6231	Bolt – Wheel	2
34	74–1670	Spacer – Wheel Cover	2
35	3296–6	Nut – Lock	2
36	65–5220	Screw – Socket Hd. Cap	2
37	60–8870	Yoke – Shift	1
38	29–9570	Bushing – Yoke	1
39	60–8810	Retainer – Shift Fork	1
40	76–0780	Sleeve – Shift Key	1
41	76–0760	Key – Shift	2
42	76–0770	Collar – Shift	1
43	65–5250	Clip – Spring	1
44	36–4780	Washer – Thrust	1

*Not Illustrated

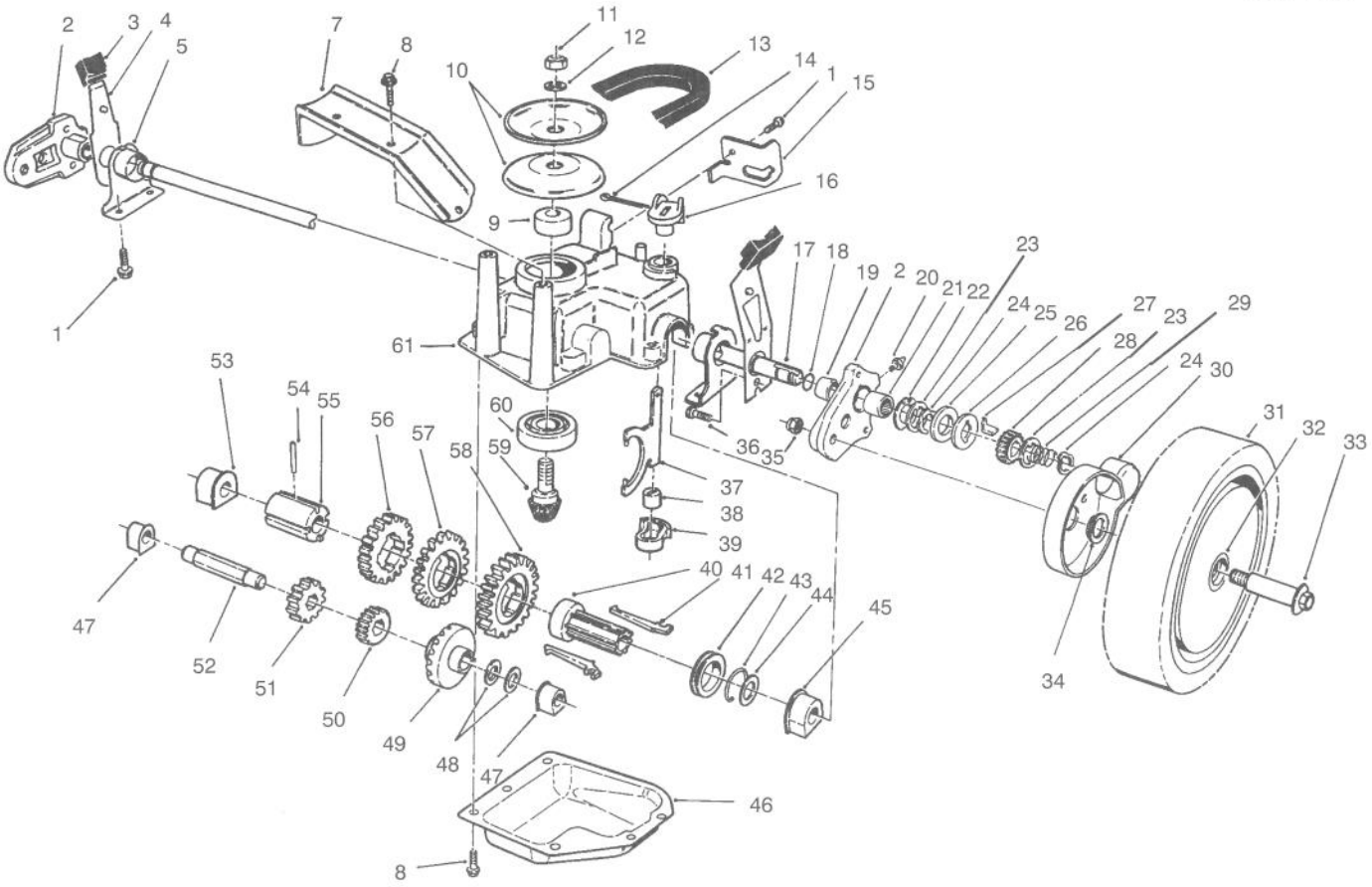

C–1555

GEAR CASE ASSEMBLY (Continued)

Ref. No.	Part No.	Description	No. Used
45	60–8770	Bushing – Output Shaft	1
46	60–8730	Cover – Gear Case	1
47	60–8750	Bushing – Intrmdt. Shaft	2
48	36–4791	Washer – Thrust	2
49	55–3760	Gear – Pinion 15T	1
50	55–3780	Gear – Pinion 20T	1
51	55–3800	Gear – Pinion 25T	1
52	60–8800	Shaft – Intermediate	1
53	60–8850	Bushing – Output Shaft	1

Ref. No.	Part No.	Description	No. Used
54	32121–120	Pin – Coil	1
55	60–8790	Sleeve – Gear	1
56	55–3810	Gear – 39T (3rd Gear)	1
57	55–3790	Gear – 44T (2nd Gear)	1
58	55–3770	Gear – 49T (1st Gear)	1
59	60–8890	Pinion – Bevel	1
60	38–7820	Bearing – Ball	1
61	60–8710	Case – Gear (Upper)	1
*	62–6673	Gear Case Assy. Complete	1

*Not Illustrated

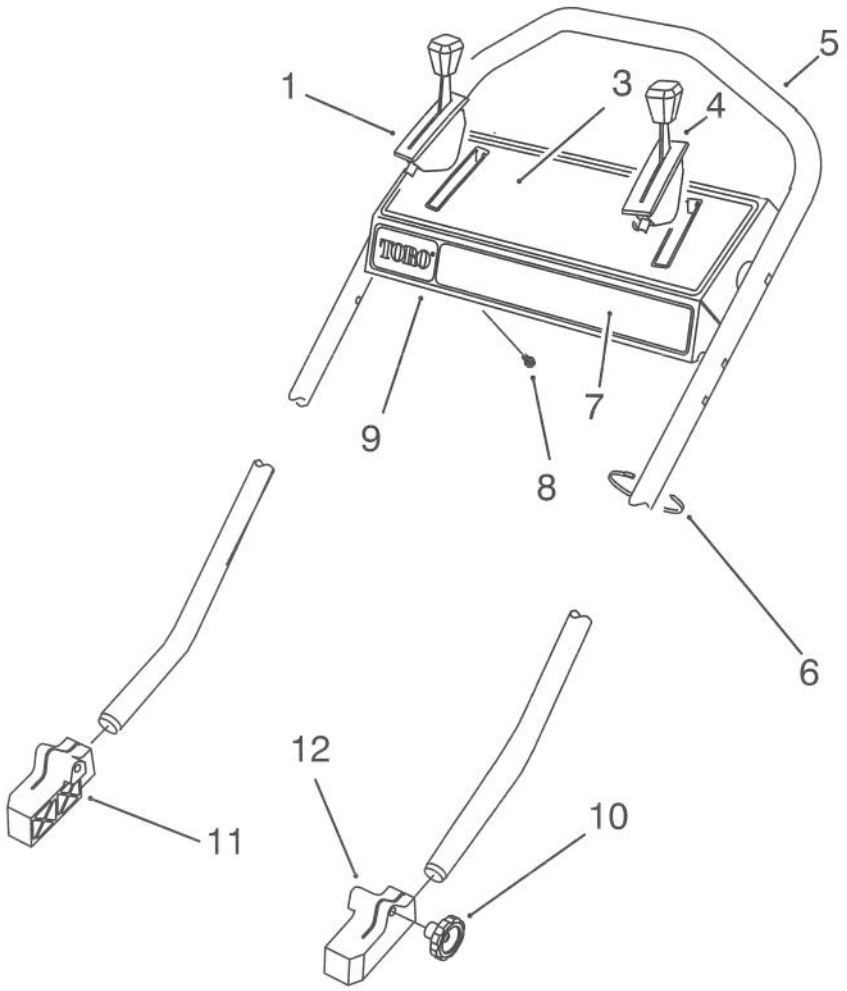

C–1569A

HANDLE ASSEMBLY

Ref. No.	Part No.	Description	No. Used
1	76–2713	Control – Ground Speed	1
3	71–9877	Decal – Instruction	1
4	66–0236	Control – Throttle Bend Type #1 Sheath Lg. 43 3/4" (111cm) Wire Lg. 2–1/2" (6cm)	1
5	71–9690	Handle	1

Ref. No.	Part No.	Description	No. Used
6	3290–378	Tie – Cable	4
7	71–9874	Decal – Panel	1
8	32104–76	Screw – Self Tapping	5
9	16–1759	Control Panel Assembly (Incl. Ref. #2, 3, & 7)	1
10	19–4050	Knob – Handle Release	2
11	71–8100	Mount – Handle R.H.	1
12	71–8090	Mount – Handle L.H.	1

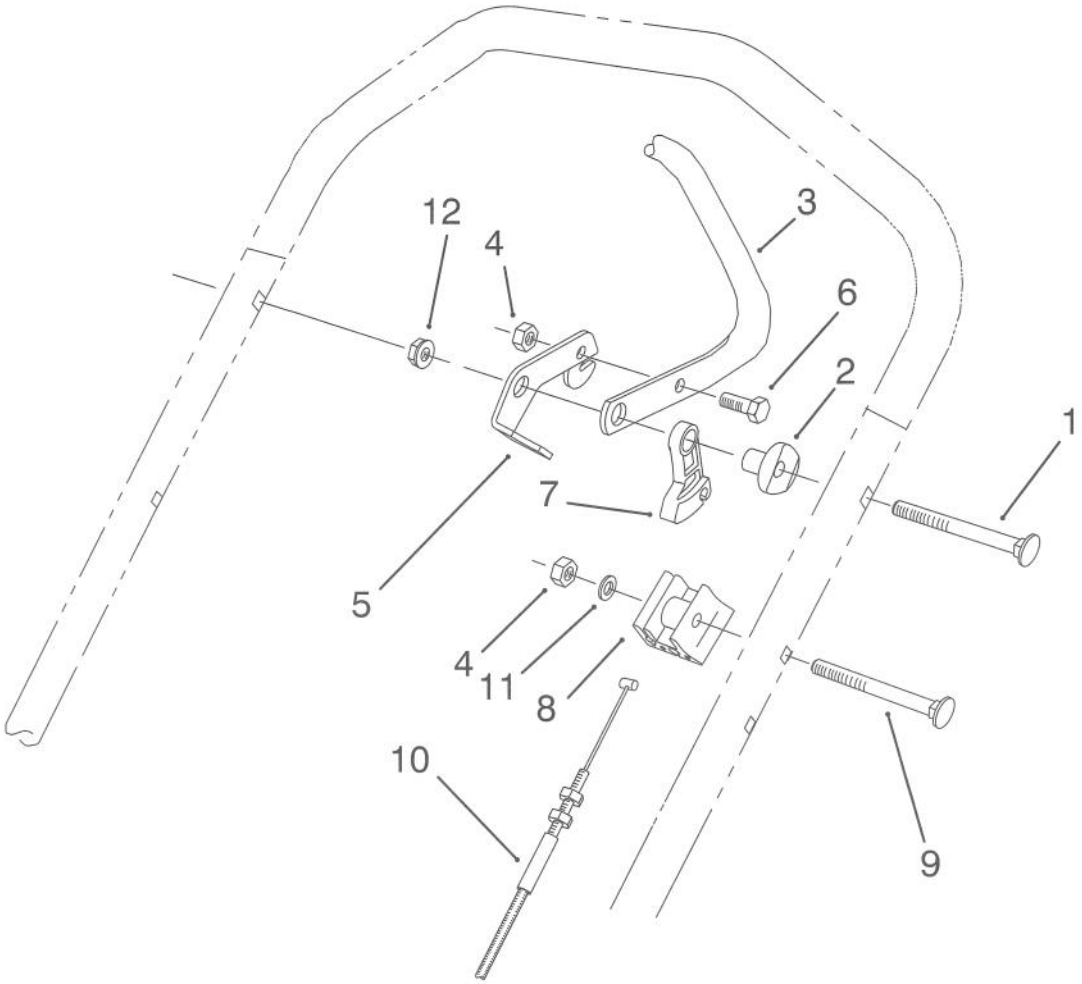

C–1567A

TRACTION CONTROL ASSEMBLY

Ref. No.	Part No.	Description	No. Used
1	17–9426	Screw – Handle	2
2	66–0330	Support – Spacer	2
3	52–7430	Control Bar Assembly	1
4	3296–42	Nut – Lock	2
5	66–5350	Lever – Control	1
6	321–3	Screw – Cap Hex. Hd.	1

Ref. No.	Part No.	Description	No. Used
7	46–5520	Lever – Traction	1
8	71–0960	Support – Cable	1
9	46–6432	Screw – Handle	1
10	71–0620	Cable – Traction	1
11	3256–22	Washer – Flat	1
12	3296–58	Nut – Lock	2

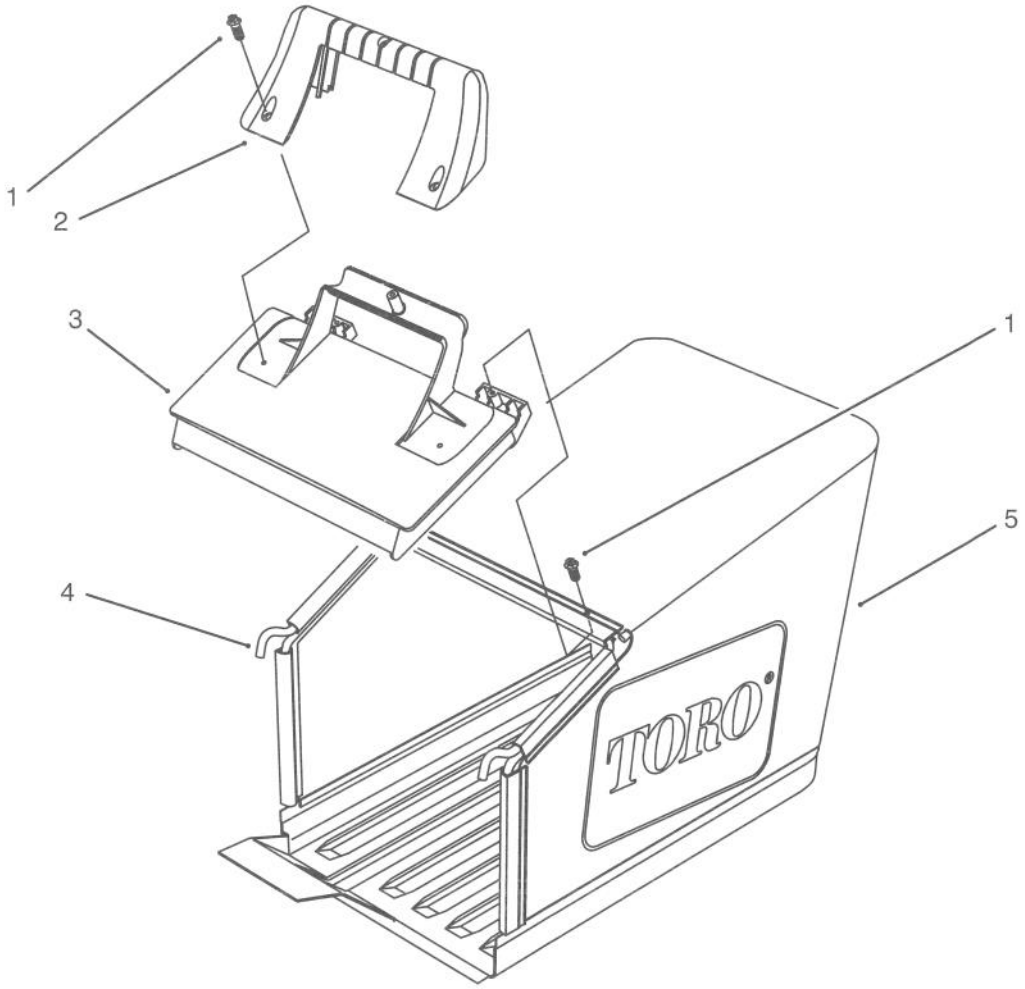

C–1570

GRASS BAG ASSEMBLY

Ref. No.	Part No.	Description	No. Used
1	32144–111	Screw – Index Hex Washer Head	5
2	71–9480	Handle – Door	1
3	71–9470	Door – Bag	1
4	71–9930	Frame – Grass Bag	1
5	71–9680	Bag – Grass 53cm	1

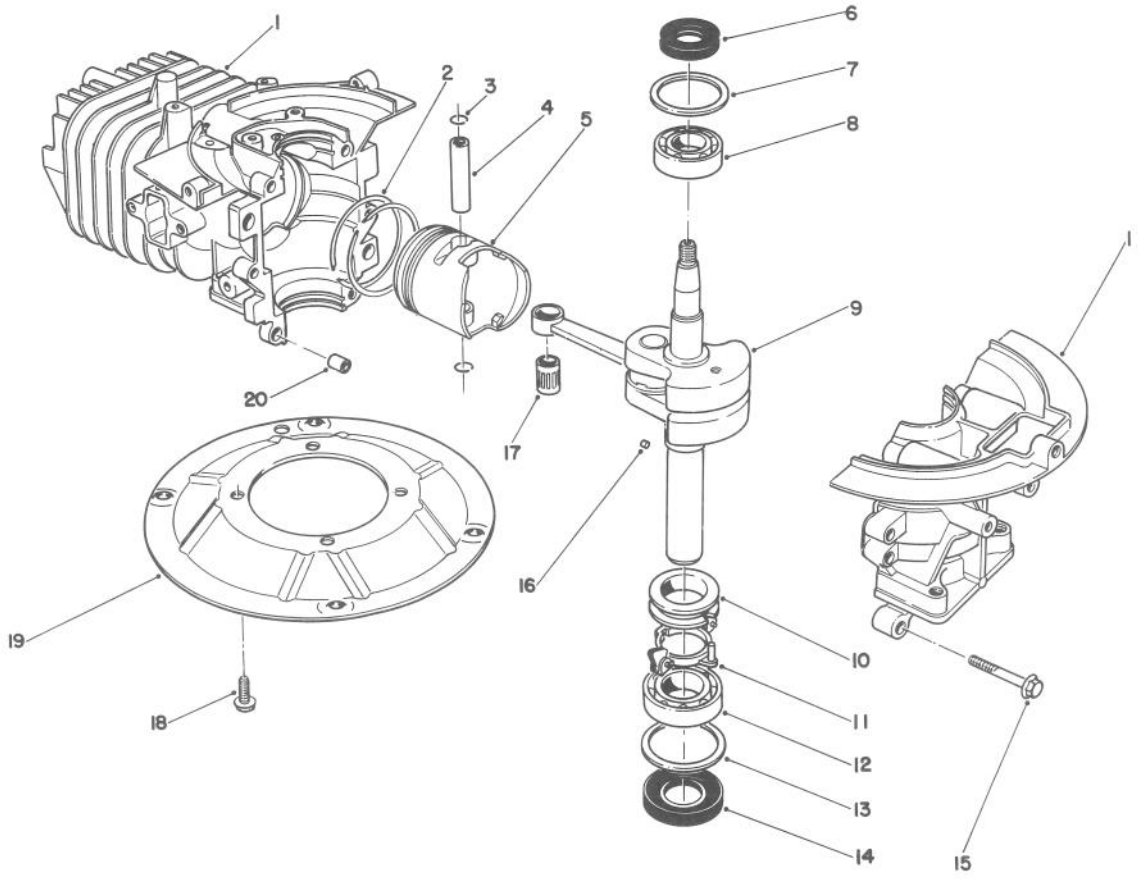

T–0663

CRANKSHAFT ASSEMBLY (Model No. 47PP3–6)

Ref. No.	Part No.	Description	No. Used
1	81–2800	Crankcase/Cylinder Ass'y	1
2	81–0590	Ring Set	1
3	81–0620	Circlip	2
4	81–0600	Pin – Wrist	1
5	81–0580	Piston (58mm)	1
6	81–0720	Oil Seal – Upper	1
7	81–0710	Thrust Washer – Upper	1
8	81–0690	Bearing – Upper (20mm)	1
9	81–4600	Crankshaft/Connecting Rod Assembly	1
10	81–0770	Collar – Governor	1

Ref. No.	Part No.	Description	No. Used
11	81–0750	Bracket – Governor Arm	1
12	81–0700	Bearing – Lower (25mm)	1
13	81–0730	Thrust Washer – Lower	1
14	81–0740	Oil Seal – Lower	1
15	81–0540	Bolt (30mm Lg.)	6
16	81–0760	Pin – Crankshaft	1
17	81–0610	Bearing – Wrist Pin	1
18	81–0570	Bolt (20mm Lg.)	4
19	81–0560	Plate – Mounting	1
20	81–0520	Pin – Crankcase	2
*	12–7699	Short Block Assembly	1

*Not Illustrated

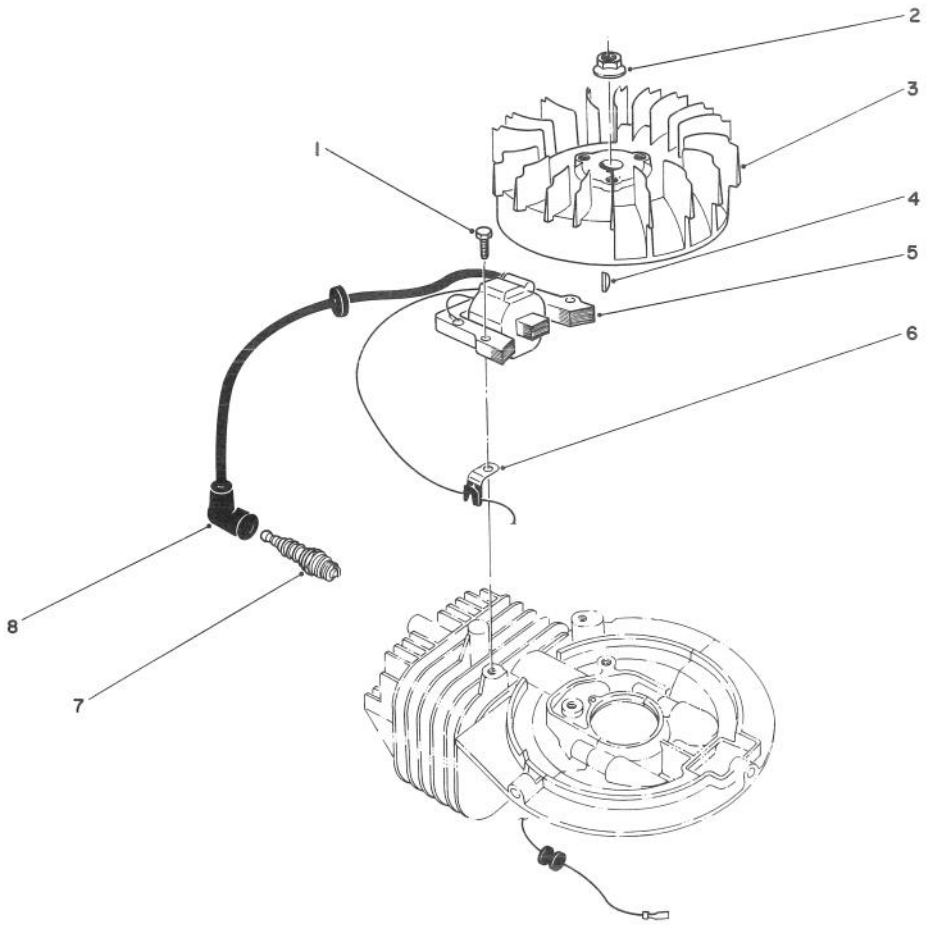

C–0176

IGNITION ASSEMBLY (Model No. 47PP3–6)

Ref. No.	Part No.	Description	No. Used
1	81–5680	Capscrew – Hex Hd.	1
2	81–1330	Nut	1
3	81–2810	Flywheel – Magneto	1
4	81–2370	Key – Flywheel	1
5	81–2820	Coil/Ignition Assembly	1

Ref. No.	Part No.	Description	No. Used
6	81–1480	Clamp	1
7	50–1170	Spark Plug	1
8	81–1500	Cover – Spark Plug	1
*	41–7650	Puller – Flywheel	1

*Not Illustrated

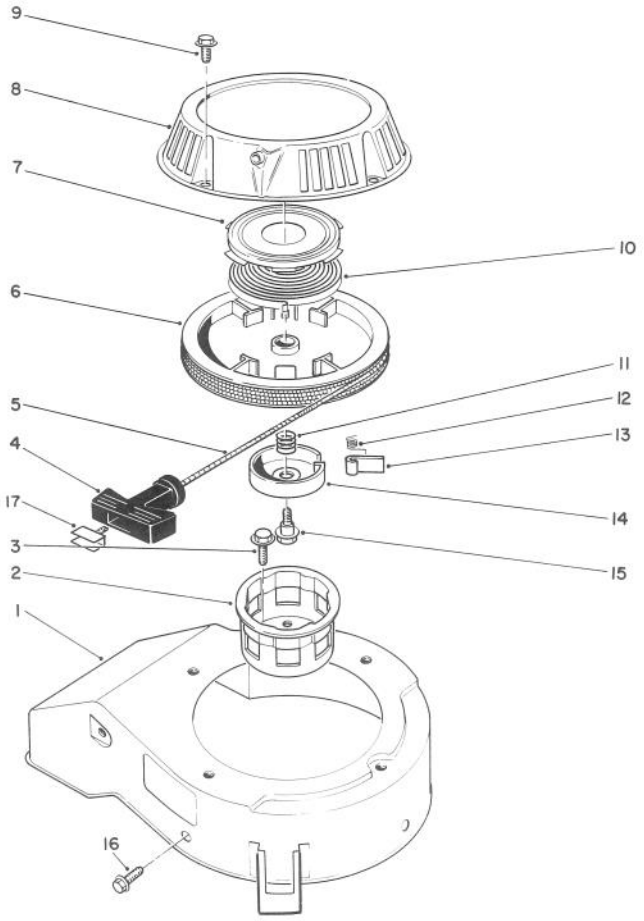

T–0668

RECOIL ASSEMBLY
(Model No. 47PP3–6)

Ref. No.	Part No.	Description	No. Used
1	81–2070	Cover – Cooling Fan	1
2	81–1290	Pulley – Starter Cup	1
3	81–1300	Bolt (16mm Lg.)	3
4	81–1630	Handle – Recoil	1
5	81–1270	Rope	1
6	81–1210	Reel – Rope Pulley	1
7		Retainer Cup – Recoil Spring	1
8	81–2090	Case – Recoil	1
9	81–1280	Bolt	4
10		Spring – Recoil	1
11	81–1240	Spring – Compression	1

Ref. No.	Part No.	Description	No. Used
12	81–1220	Spring – Dog	1
13	81–1230	Dog	1
14	81–1250	Retainer – Dog	1
15	81–1260	Bolt – Shoulder	1
16	53–1340	Bolt – Self Tapping	3
17	81–5760	Insert – Recoil Handle	1
*	81–2300	Spring & Retainer (Incl. Ref. #7 & 10)	1
*	81–5480	Starter Assembly (Incl. Ref. #4–8, & 10–15)	1

*Not Illustrated

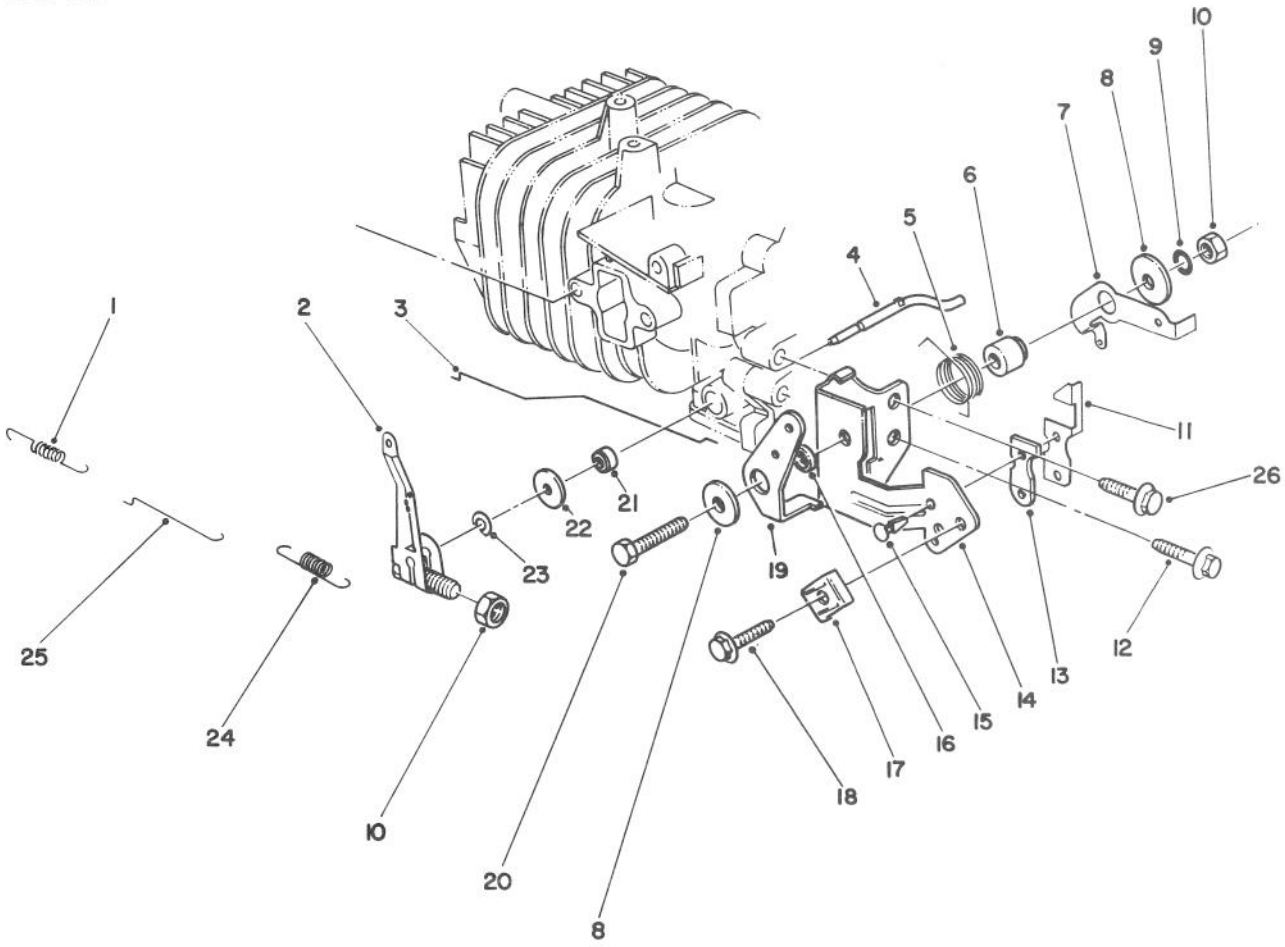

C–0177

GOVERNOR ASSEMBLY (Model No. 47PP3–6)

Ref. No.	Part No.	Description	No. Used
1	81–0920	Spring – Carburetor Rod	1
2	81–5420	Governor Arm/Bolt Ass'y	1
3	81–5410	Rod – Choke	1
4	81–0840	Shaft – Governor	1
5	81–2460	Spring – Choke Control Lever	1
6	81–1770	Spacer – Governor Spring Lever	1
7	81–2850	Lever – Governor Spring	1
8	81–1750	Washer – Choke Control Lever	2
9	81–1450	Washer – Lock	1
10	81–0900	Nut	2
11	81–1840	Terminal – Kill Switch	1
12	81–0540	Bolt – Self Tapping	1

Ref. No.	Part No.	Description	No. Used
13	81–1830	Insulator – Kill Switch	1
14	81–2420	Bracket – Throttle Control	1
15	81–4530	Rivet – Kill Switch	2
16	81–2470	Spacer – Choke Control Lever	1
17	81–2430	Clamp – Cable	1
18	50–0130	Bolt – Cable Clamp	1
19	81–1710	Lever – Choke Control	1
20	81–1730	Bolt – Throttle Control Brkt.	1
21	81–0850	Oil Seal – Governor Shaft	1
22	81–0860	Washer	1
23	81–0870	E–Ring	1
24	81–2830	Spring – Governor	1
25	81–0910	Rod – Carburetor	1
26	81–1170	Bolt – Self Tapping	1

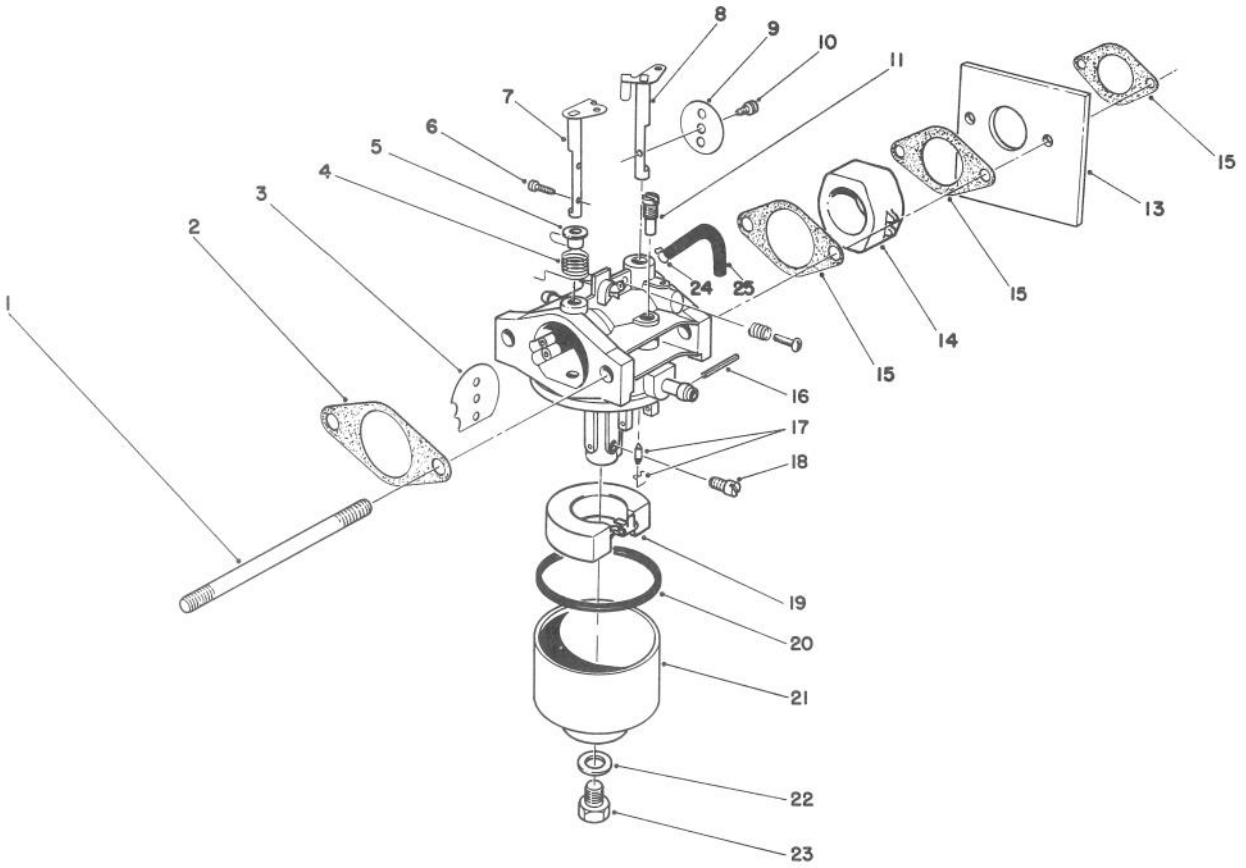

C–0191

CARBURETOR ASSEMBLY (Model No. 47PP3–6)

Ref. No.	Part No.	Description	No. Used
1	81–5450	Stud Bolt – Carburetor	2
2	81–0090	Gasket	2
3	81–0240	Valve – Choke	1
4	81–0230	Spring – Choke	1
5	81–0220	Bushing – Choke Valve	1
6	81–2160	Screw	2
7	81–1950	Shaft – Choke	1
8	81–0250	Shaft – Throttle	1
9	81–0260	Valve – Throttle	1
10	81–0270	Screw – Throttle Valve	1
11	81–1030	Jet – Pilot (#40)	1
13	81–5490	Shield – Carburetor	1
14	81–5440	Insulator – Carburetor	1
15	81–0780	Gasket	3
16	81–5600	Pin	1
17	81–4910	Needle Valve/Spring Wire	1

Ref. No.	Part No.	Description	No. Used
18	81–1060	Jet – Main (#75)	1
*	81–2340	Jet – Main (#72.5) High Alt., Above 6000 (Optional)	1
19	81–0970	Float	1
20	81–1010	Gasket – Float Bowl	1
21	81–5660	Bowl – Float	1
22	81–1020	Gasket – Bowl Screw	1
23	81–5670	Screw – Bowl	1
24	81–5460	Clamp – Vent Tube	1
25	81–5470	Tube – Vent	1
*	12–6379	Carburetor Kit (Incl. Ref. #2, 15, 17, 20, & 22)	1
*	81–5740	Carburetor Ass'y Complete	1
*	81–5810	Needle Valve Seat Kit	1

*Not Illustrated

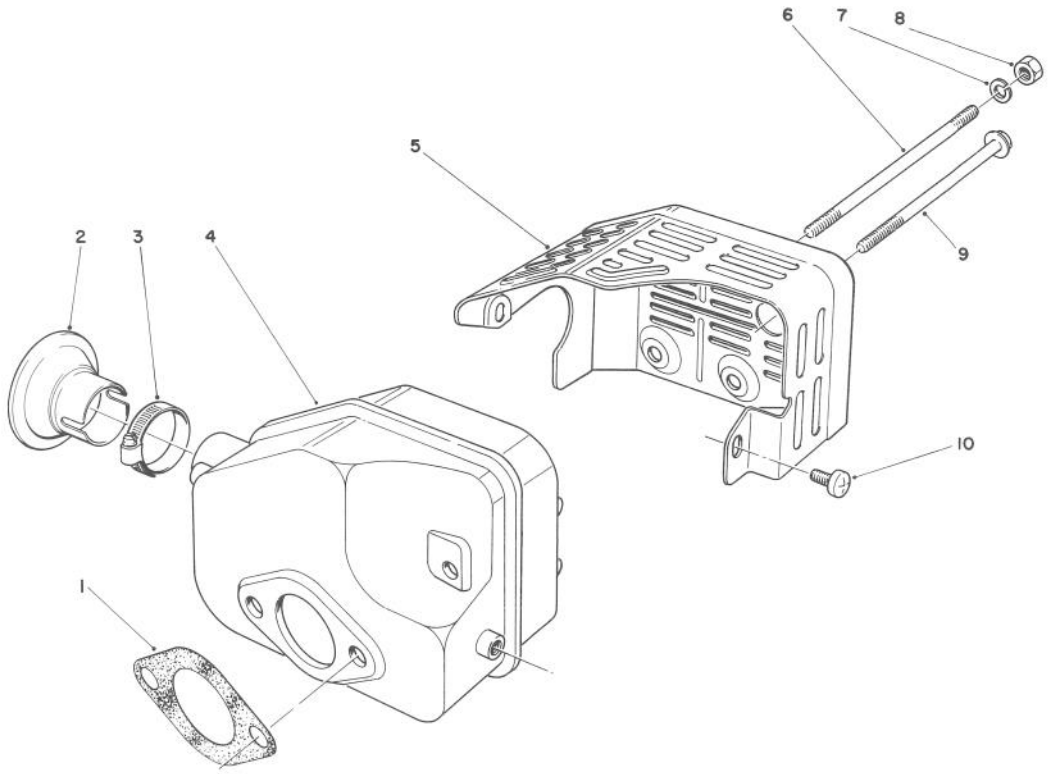

T–0667

MUFFLER ASSEMBLY
(Model No. 47PP3–6)

Ref. No.	Part No.	Description	No. Used
1	81–1080	Gasket – Muffler	1
*2	81–0200	Spark Arrester	1
†3		Clamp	1
4	81–5690	Muffler	1
5	81–2450	Cover – Muffler	1

Ref. No.	Part No.	Description	No. Used
6	81–1100	Bolt	2
7	81–1120	Washer – Lock	2
8	81–1110	Nut	2
9	81–1150	Bolt – Self Tapping	1
10	81–1140	Screw – Phillips Hd.	2

*Optional Equipment
†Obtain Locally

TORO PART NUMBER INDEX

Part No.	Description	Pg. No.	Ref. No.	Qty.
12–6379	Carburetor Kit	13	*	1
12–7699	Short Block Assembly	9	*	1
14–9949	Wheel & Tire Assembly	1	20	2
14–9959	Wheel Tire & Gear Assy.	4	31	2
16–1759	Control Panel Assembly	6	9	1
16–1769	Housing – 53cm	1	4	1
17–9426	Screw – Handle	7	1	2
19–4050	Knob – Handle Release	6	10	2
25–7740	Knob – Arm	4	3	2
25–7740	Knob – Arm	1	28	2
26–0670	Screw – Blade	3	4	1
27–6231	Bolt – Wheel	1	22	2
27–6231	Bolt – Wheel	4	33	2
27–6250	Bushing – Wheel	1	21	4
27–6250	Bushing – Wheel	4	32	4
29–9570	Bushing – Yoke	4	38	1
36–4780	Washer – Thrust	4	44	1
36–4791	Washer – Thrust	5	48	2
38–7820	Bearing – Ball	5	60	1
40–1940	Washer – Wheel Bolt	1	23	4
41–7650	Puller – Flywheel	10	*	1
44–2750	Body – Primer	2	16	1
44–3172	Hose – Primer	2	6	1
46–5520	Lever – Traction	7	7	1
46–6432	Screw – Handle	7	9	1
46–8290	Plate – Logo Toro	2	1	1
48–2060	Bearing –Needle	4	21	2
49–2040	Screw – Self Tapping	4	8	8
50–0130	Bolt – Cable Clamp	12	18	1
50–1170	Spark Plug	10	7	1
50–7180	Nut – Lock	2	11	2
51–2690	Screw – Hex Washer Hd.	2	8	1
51–3215	Hose – Fuel	2	14	1
51–3216	Hose – Fuel	2	20	1
52–7430	Control Bar Assembly	7	3	1
53–1340	Bolt – Self Tapping	11	16	3
55–3575	Gas Cap Assembly	2	3	1
55–3760	Gear – Pinion 15T	5	49	1
55–3770	Gear – 49T (1st Gear)	5	58	1
55–3780	Gear – Pinion 20T	5	50	1
55–3790	Gear – 44T (2nd Gear)	5	57	1
55–3800	Gear – Pinion 25T	5	51	1
55–3810	Gear – 39T (3rd Gear)	5	56	1
57–3110	Decal – Recoil	2	2	1
60–8710	Case – Gear (Upper)	5	61	1
60–8730	Cover – Gear Case	5	46	1
60–8750	Bushing – Intrmdt. Shaft	5	47	2
60–8770	Bushing – Output Shaft	5	45	1
60–8790	Sleeve – Gear	5	55	1
60–8800	Shaft – Intermediate	5	52	1
60–8810	Retainer – Shift Fork	4	39	1
60–8840	Pulley – Half	4	10	2
60–8850	Bushing – Output Shaft	5	53	1
60–8870	Yoke – Shift	4	37	1
60–8890	Pinion – Bevel	5	59	1
62–3980	Spacer	2	12	2
62–6660	Spacer	4	9	1
62–6673	Gear Case Assy. Complete	5	*	1
62–7540	Retainer – Blade	3	3	1
62–7550	Pulley – Drive	3	8	1
62–7700	Blade – 21	3	6	1
63–9330	Body – Air Cleaner	2	13	1
63–9340	Cover – Air Cleaner	2	9	1
63–9380	Foam Element – Air Cleaner	2	10	1
65–2720	Ring – Retaining	4	24	4
65–4710	Ring – Friction	4	25	2
65–4720	Spring – Compression	4	29	2
65–4730	Washer – Thrust (Inner)	4	22	2
65–4740	Washer – Thrust (Keyed)	4	23	4
65–4750	Pinion	4	28	2
65–4760	Washer –Clutch	4	26	2
65–4770	Shaft – Output	4	17	1
65–5042	Pivot Arm Assembly	4	2	2
65–5190	Bracket – Belt Guide	4	7	1
65–5200	Shield – BBC	3	7	1
65–5210	Screw – Thread Forming	1	7	2
65–5220	Screw – Cap Socket Hd.	1	26	2
65–5220	Screw – Socket Hd. Cap	4	36	2
65–5250	Clip – Spring	4	43	1
65–5440	Spring Arm Assembly	4	4	2
65–5660	Panel – Screen	1	2	1
66–0020	Panel – Vertical	1	1	1
66–0030	Bracket – Cable Support	3	1	1
66–0210	V–Belt	4	13	1
66–0236	Control – Throttle	6	4	1
66–0330	Support – Spacer	7	2	2
66–0360	Cap – End	4	5	2
66–0540	Arm – Spring Front	1	25	2
66–0560	Screw – Shoulder	1	19	2
66–0570	Bracket – Belt Guide	3	9	1
66–0580	Arm – Pivot Front	1	30	2
66–0620	Retainer – Belt	1	16	1
66–0680	Decal – French Regulation	1	13	1
66–5350	Lever – Control	7	5	1
66–6040	Key – Rocking (R.H.)	4	*	1
66–6050	Key – Rocking (L.H.)	4	27	1
66–7460	Bulb – Primer	2	17	1
66–9301	Screw – Engine Mount	2	15	3
70–9760	Bushing – Sleeve	4	19	2
71–0620	Cable – Traction	7	10	1
71–0960	Support – Cable	7	8	1
71–7900	Cap – Hinge Bolt L.H.	1	10	1
71–7910	Cap – Hinge Bolt R.H.	1	6	1
71–8090	Mount – Handle L.H.	6	12	1
71–8100	Mount – Handle R.H.	6	11	1
71–8580	Spacer – Door	1	12	2
71–9280	Filter – Fuel	2	18	1
71–9470	Door – Bag	8	3	1
71–9480	Handle – Door	8	2	1
71–9640	Ramp – Discharge	1	27	1
71–9650	Access – Cover	1	14	1
71–9680	Bag – Grass 53cm	8	5	1
71–9690	Handle	6	5	1
71–9800	Door – Discharge	1	9	1
71–9840	Spring – Door	1	11	2
71–9870	Decal – Deck 53cm	1	29	1
71–9874	Decal – Panel	6	7	1
71–9877	Decal – Instruction	6	3	1
71–9920	Cover – Top	1	15	1
71–9930	Frame – Grass Bag	8	4	1
74–1660	Cover – Wheel	4	30	2
74–1670	Spacer – Wheel Cover	4	34	2
76–0760	Key – Shift	4	41	2
76–0770	Collar – Shift	4	42	1
76–0780	Sleeve – Shift Key	4	40	1
76–0920	Lever – Shift	4	16	1
76–2713	Control – Ground Speed	6	1	1
76–2930	Retainer – Cable	4	15	1
77–2800	Engine Complete	2	21	1
81–0090	Gasket	13	2	2
81–0090	Gasket – Air Cleaner	2	5	1
81–0162	Fuel Tank Assembly	2	4	1
81–0200	Spark Arrester	14	*2	1
81–0220	Bushing – Choke Valve	13	5	1
81–0230	Spring – Choke	13	4	1
81–0240	Valve – Choke	13	3	1
81–0250	Shaft – Throttle	13	8	1
81–0260	Valve – Throttle	13	9	1

*Not Illustrated

TORO PART NUMBER INDEX (Cont.)

Part No.	Description	Pg. No.	Ref. No.	Qty.
81–0270	Screw – Throttle Valve	13	10	1
81–0520	Pin – Crankcase	9	20	2
81–0540	Bolt (30mm Lg.)	9	15	6
81–0540	Bolt – Self Tapping	12	12	1
81–0560	Plate – Mounting	9	19	1
81–0570	Bolt (20mm Lg.)	9	18	4
81–0580	Piston (58mm)	9	5	1
81–0590	Ring Set	9	2	1
81–0600	Pin – Wrist	9	4	1
81–0610	Bearing – Wrist Pin	9	17	1
81–0620	Circlip	9	3	2
81–0690	Bearing – Upper (20mm)	9	8	1
81–0700	Bearing – Lower (25mm)	9	12	1
81–0710	Thrust Washer – Upper	9	7	1
81–0720	Oil Seal – Upper	9	6	1
81–0730	Thrust Washer – Lower	9	13	1
81–0740	Oil Seal – Lower	9	14	1
81–0750	Bracket – Governor Arm	9	11	1
81–0760	Pin – Crankshaft	9	16	1
81–0770	Collar – Governor	9	10	1
81–0780	Gasket	13	15	3
81–0840	Shaft – Governor	12	4	1
81–0850	Oil Seal – Governor Shaft	12	21	1
81–0860	Washer	12	22	1
81–0870	E–Ring	12	23	1
81–0900	Nut	12	10	2
81–0910	Rod – Carburetor	12	25	1
81–0920	Spring – Carburetor Rod	12	1	1
81–0970	Float	13	19	1
81–1010	Gasket – Float Bowl	13	20	1
81–1020	Gasket – Bowl Screw	13	22	1
81–1030	Jet – Pilot (#40)	13	11	1
81–1060	Jet – Main (#75)	13	18	1
81–1080	Gasket – Muffler	14	1	1
81–1100	Bolt	14	6	2
81–1110	Nut	14	8	2
81–1120	Washer – Lock	14	7	2
81–1140	Screw – Phillips Hd.	14	10	2
81–1150	Bolt – Self Tapping	14	9	1
81–1170	Bolt – Self Tapping	12	26	1
81–1210	Reel – Rope Pulley	11	6	1
81–1220	Spring – Dog	11	12	1
81–1230	Dog	11	13	1
81–1240	Spring – Compression	11	11	1
81–1250	Retainer – Dog	11	14	1
81–1260	Bolt – Shoulder	11	15	1
81–1270	Rope	11	5	1
81–1280	Bolt	11	9	4
81–1290	Pulley – Starter Cup	11	2	1
81–1300	Bolt (16mm Lg.)	11	3	3
81–1330	Nut	10	2	1
81–1450	Washer – Lock	12	9	1
81–1480	Clamp	10	6	1
81–1500	Cover – Spark Plug	10	8	1
81–1630	Handle – Recoil	11	4	1
81–1710	Lever – Choke Control	12	19	1
81–1730	Bolt – Throttle Control Brkt.	12	20	1
81–1750	Washer – Choke Control	12	8	2
81–1770	Spacer – Governor Spring	12	6	1
81–1830	Insulator – Kill Switch	12	13	1
81–1840	Terminal – Kill Switch	12	11	1
81–1950	Shaft – Choke	13	7	1
81–2070	Cover – Cooling Fan	11	1	1
81–2090	Case – Recoil	11	8	1

Part No.	Description	Pg. No.	Ref. No.	Qty.
81–2160	Screw	13	6	2
81–2300	Spring & Retainer	11	*	1
81–2340	Jet – Main (#72.5) High Alt.,	13	*	1
81–2370	Key – Flywheel	10	4	1
81–2420	Bracket – Throttle Control	12	14	1
81–2430	Clamp – Cable	12	17	1
81–2450	Cover – Muffler	14	5	1
81–2460	Spring – Choke Control	12	5	1
81–2470	Spacer – Choke Control	12	16	1
81–2800	Crankcase/Cylinder Ass'y	9	1	1
81–2810	Flywheel – Magneto	10	3	1
81–2820	Coil/Ignition Assembly	10	5	1
81–2830	Spring – Governor	12	24	1
81–2850	Lever – Governor Spring	12	7	1
81–4530	Rivet – Kill Switch	12	15	2
81–4600	Crankshaft/Connecting Rod	9	9	1
81–4910	Needle Valve/Spring Wire	13	17	1
81–5410	Rod – Choke	12	3	1
81–5420	Governor Arm/Bolt Ass'y	12	2	1
81–5440	Insulator – Carburetor	13	14	1
81–5450	Stud Bolt – Carburetor	13	1	2
81–5460	Clamp – Vent Tube	13	24	1
81–5470	Tube – Vent	13	25	1
81–5480	Starter Assembly	11	*	1
81–5490	Shield – Carburetor	13	13	1
81–5600	Pin	13	16	1
81–5660	Bowl – Float	13	21	1
81–5670	Screw – Bowl	13	23	1
81–5680	Capscrew – Hex Hd.	10	1	1
81–5690	Muffler	14	4	1
81–5740	Carburetor Ass'y Complete	13	*	1
81–5760	Insert – Recoil Handle	11	17	1
81–5810	Needle Valve Seat Kit	13	*	1
92–9077	Decal – Danger	1	5	1
237–153	Seal – ORing	4	18	2
2412–95	Clamp – Hose	2	19	4
302–56	Fitting – Grease	4	20	2
321–3	Screw – Cap Hex. Hd.	7	6	1
322–29	Screw – Hex Hd. Cap	1	8	2
3253–22	Washer – Lock	3	5	1
3256–16	Washer – Flat	2	7	1
3256–22	Washer – Flat	7	11	1
3256–24	Washer – Flat	4	12	1
3256–24	Washer – Flat	1	17	1
3272–5	Pin – Cotter	4	14	1
3290–378	Tie – Cable	6	6	4
3296–5	Nut – Lock	4	11	1
3296–6	Nut – Lock	1	24	4
3296–6	Nut – Lock	4	35	2
3296–42	Nut – Lock	7	4	2
3296–58	Nut – Lock	7	12	2
32104–76	Screw – Self Tapping	6	8	5
32121–120	Pin – Coil	5	54	1
32144–15	Screw – Hex Flange Hd.	1	18	1
32144–70	Screw – Cap Hex. Hd.	1	3	6
32144–70	Screw – Hex. Washer Hd.	4	1	5
32144–70	Screw – Taptite	3	2	7
32144–111	Screw – Index Hex Wash.	8	1	5

OPTIONAL EQUIPMENT

Leaf Shredder Kit ..... Model No. 59180
Dethatcher Kit ..... Model No. 59131
Spark Arrestor Kit ..... Part No. 81–0200

AL-935356

Litho in U.S.A.

*Not Illustrated