FORM NO. 3316–593

TORO®

MODEL NO. 20764B–4900001 & UP

PARTS CATALOG

21" RECYCLER®
Mower

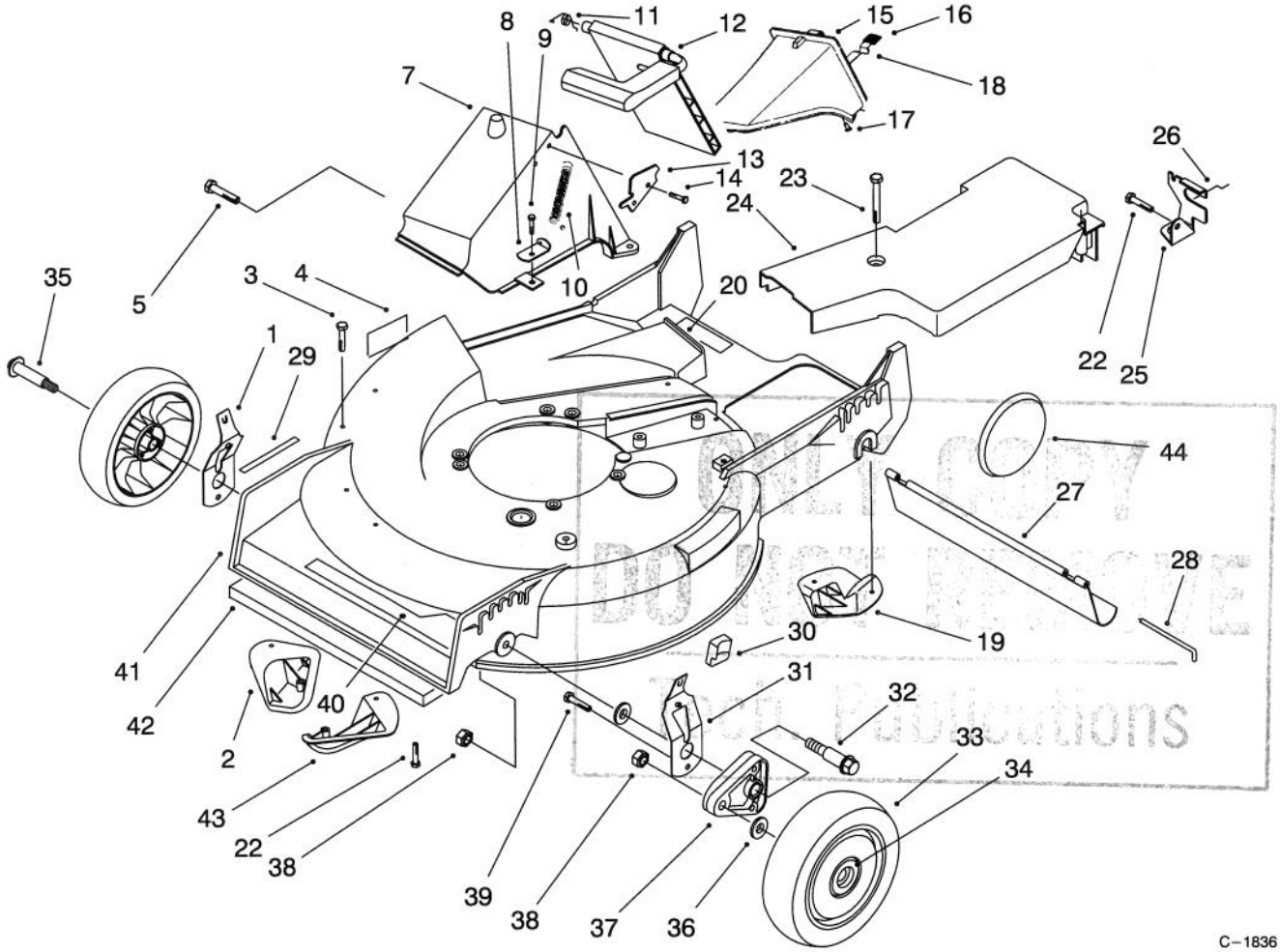

C–1836

HOUSING ASSEMBLY

Ref. No.	Part No.	Description	No. Used
1	71–0560	Spring Arm Ass'y – R.H.	1
2	92–1730	Plate – Kicker Left Front	1
3	32144–111	Screw – Pan Hd.	6
4	92–9077	Decal – DIN	1
5	46–6810	Screw – Hex Washer Hd. Thread Forming	1
7	82–9151	Tunnel – Discharge	1
8	71–9350	Bracket – Spring	1
9	46–6811	Screw w/Washer	3
10	76–4660	Spring – Door	1
11	80–3770	Retainer – Door	1
12	77–0200	Discharge Door Assembly	1
13	76–4570	Plate – Latch	1
14	46–8090	Screw – Hex Washer Hd. Self Tapping	2
15	77–0502	Plug Assembly (Incl. Ref. #16–18)	1
16	76–4650	Grip – Latch	1
17	3295–35	Rivet	1
18	76–4640	Latch – Plate	1
19	92–1750	Plate – Kicker Left Rear	1
20	66–0680	Decal – French Regulation	1
22	32144–70	Screw – Hex Washer Hd. Thread Forming	5
23	37–7260	Screw – Special Cap	2
24	82–9910	Belt Cover	1
25	82–5680	Bracket – Traction Adjust.	1
26	46–7030	Retainer – Cable	1
27	44–0580	Shield –Rear	1
28	33–3208	Rod – Shield	1
29	92–7856	Decal – H.O.C.	4

TPS

© The TORO Company –1993
All Rights Reserved

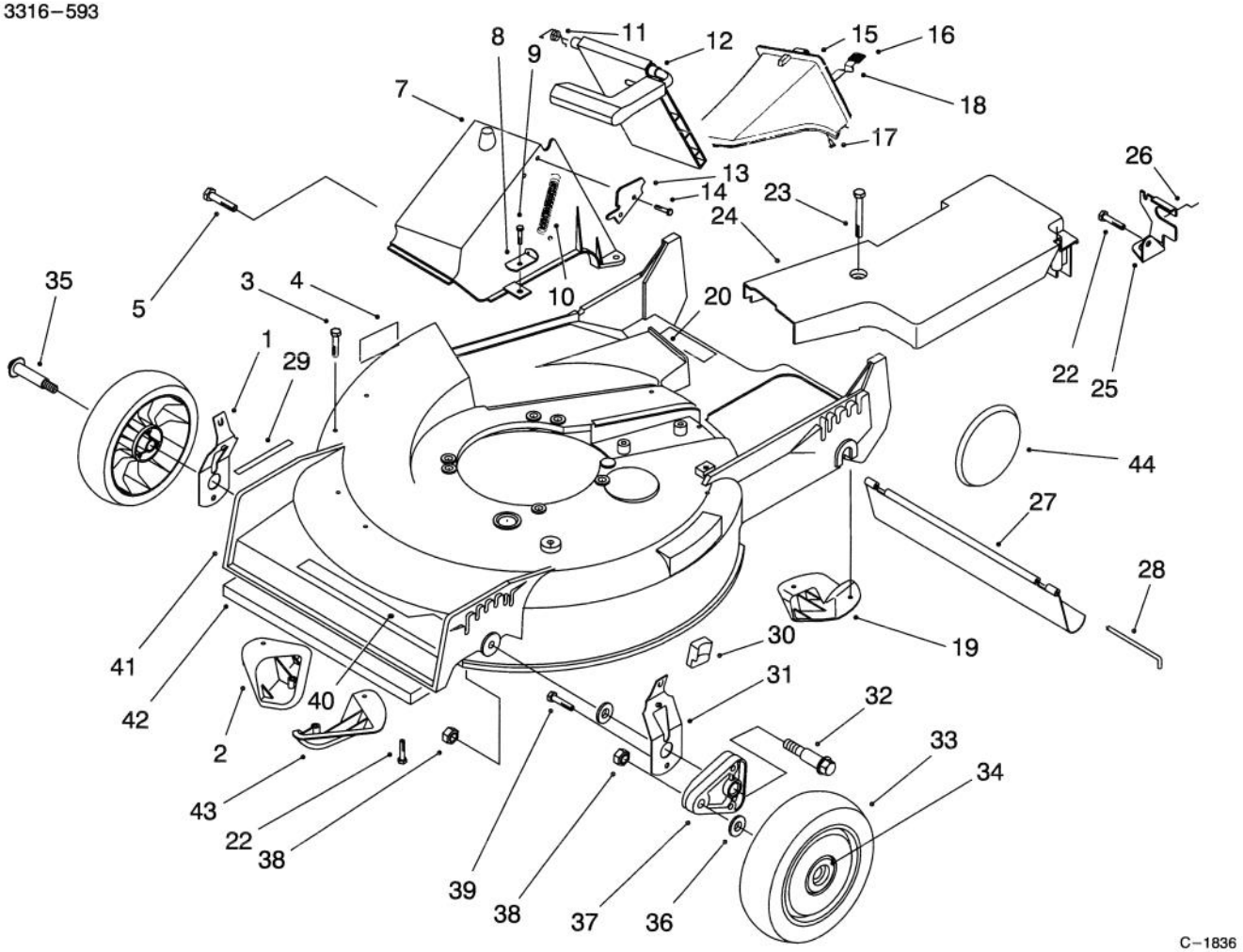

HOUSING ASSEMBLY (Continued)

Ref. No.	Part No.	Description	No. Used
30	25–7740	Knob – Spring Arm	2
31	71–0570	Spring Arm Ass'y – L.H.	1
32	66–0560	Screw – Pivot	2
33	14–9949	Wheel & Tire Assembly (Incl. Ref. #34)	2
34	27–6250	Bushing	4
35	27–6232	Bolt – Wheel	2
36	40–1940	Washer – Wheel	4
37	66–0580	Arm – Pivot	2
38	3296–6	Nut – Lock	4

Ref. No.	Part No.	Description	No. Used
39	32144–85	Screw – Hex Hd. Cap	2
40	92–7858	Decal – Deck	1
41	16–1599	Housing Assembly (Incl. Ref. #2, 3, 4, 19, 22, 29, & 43 pg. 2) (Incl. Ref. #5 & 6 pg. 3)	1
42	46–5400	Shield – Front	1
43	92–1720	Plate – Kicker Rt. Front	1
44	92–7663	Cover – Wheel	1

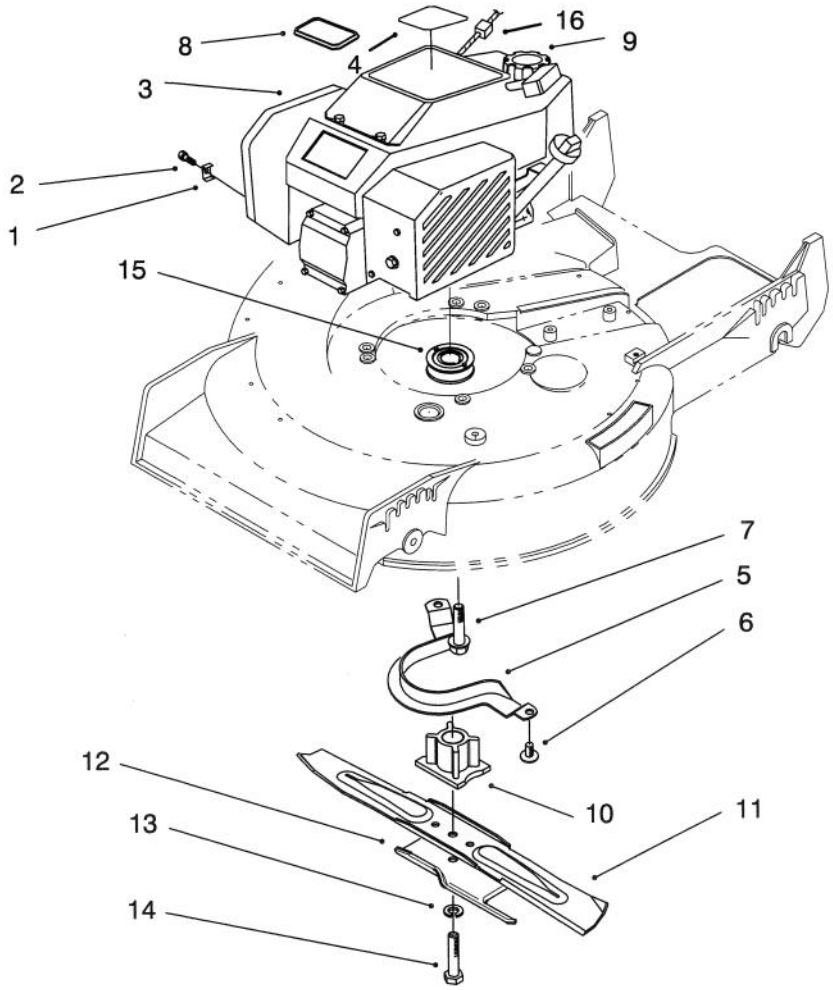

C–1837

ENGINE ASSEMBLY

Ref. No.	Part No.	Description	No. Used
1	2210–249	Clamp – Throttle	1
2	86–7990	Screw – Clamp	1
3	92–8872	Engine	1
4	92–7857	Decal – Recoil	1
5	66–0570	Guide – Belt	1
6	32144–70	Screw – Hex Washer Hd.	2
7	32144–102	Screw – Thread Forming	3
8	92–2289	Plate – Toro	1

Ref. No.	Part No.	Description	No. Used
9	110352	Gas Cap Assembly	1
10	62–7540	Retainer – Blade	1
11	91–2256	Blade	1
12	92–1599	Stiffener – Blade	1
13	3253–22	Washer – Lock	1
14	26–0670	Screw – Blade	1
15	62–7550	Pulley – Driver	1
16	2210–316	Stop – Rope	1

3316–593

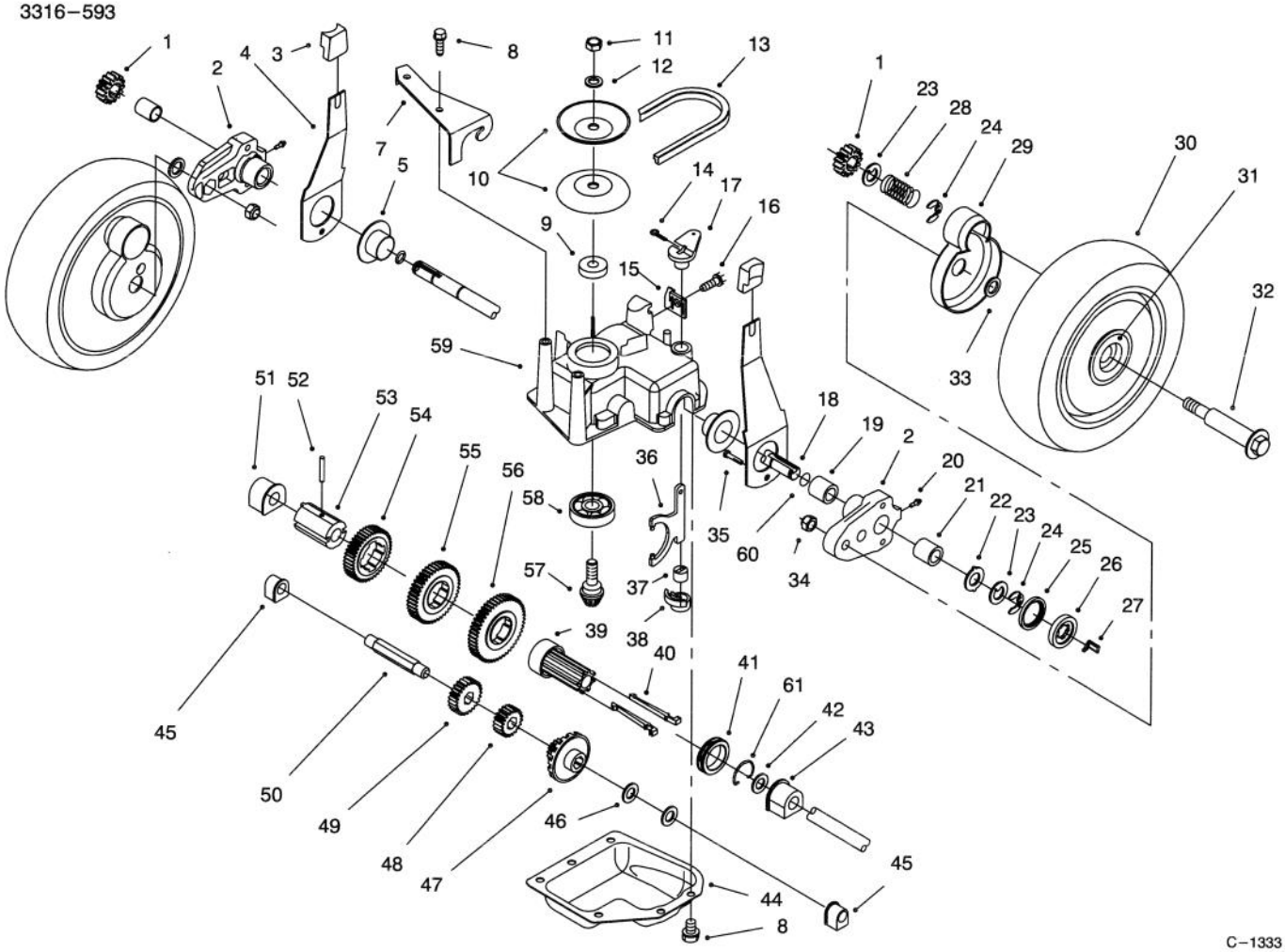

C–1333

GEAR CASE ASSEMBLY

Ref. No.	Part No.	Description	No. Used
1	65–4750	Pinion	2
2	63–8701	Pivot Arm Assembly (Incl. Ref # 19, 20, & 21)	2
3	25–7740	Knob – Arm	2
4	63–8720	Spring Arm Assembly	2
5	42–3520	End Cap	2
7	62–4320	Bracket – Belt Guide	1
8	49–2040	Screw – Self Tapping	8
9	62–6660	Spacer	1
10	60–8840	Pulley – Half	2
11	3296–5	Locknut	1
12	3256–24	Washer – Flat	1
13	62–3900	V–Belt	1
14	3272–10	Pin – Cotter	1
15	82–8780	Cable – Retainer	1
16	32144–70	Screw – Thread Forming	1
17	60–8821	Lever – Shift	1
18	65–4770	Shaft – Output	1
19	70–9760	Bushing	2
20	302–56	Fitting – Grease	2
21	48–2060	Needle Bearing	2
22	65–4730	Thrust Washer	2
23	65–4740	Thrust Washer	4
24	65–2720	Ring – Retaining	4
25	65–4710	Ring – Friction	2

Ref. No.	Part No.	Description	No. Used
26	65–4760	Washer – Clutch	2
27	66–6050	Key – Rocker L.H.	1
*	66–6040	Key – Rocker R.H.	1
28	65–4720	Spring	2
29	74–1660	Cover – Wheel	2
30	14–9959	Wheel – Tire & Gear Ass'y (Incl. Ref. # 31)	2
31	27–6250	Bushing – Wheel	4
32	27–6232	Wheel Bolt	2
33	74–1671	Spacer – Wheel Cover	2
34	3296–6	Locknut	2
35	32144–85	Screw	2
36	60–8870	Yoke – Shift	1
37	29–9570	Bushing – Yoke	1
38	60–8810	Retainer – Shift Fork	1
39	76–0780	Sleeve – Shift Key	1
40	76–0760	Key – Shift	2
41	76–0770	Collar – Shift	1
42	36–4780	Washer – Thrust	1
43	60–8770	Bushing – Output Shaft	1
44	60–8730	Cover – Gear Case	1
45	60–8750	Bushing – Int. Shaft	2
46	36–4791	Washer – Thrust	2
47	55–3760	Gear – Pinion 15 Tooth	1
48	55–3780	Gear – Pinion 20 Tooth	1

*Not Illustrated

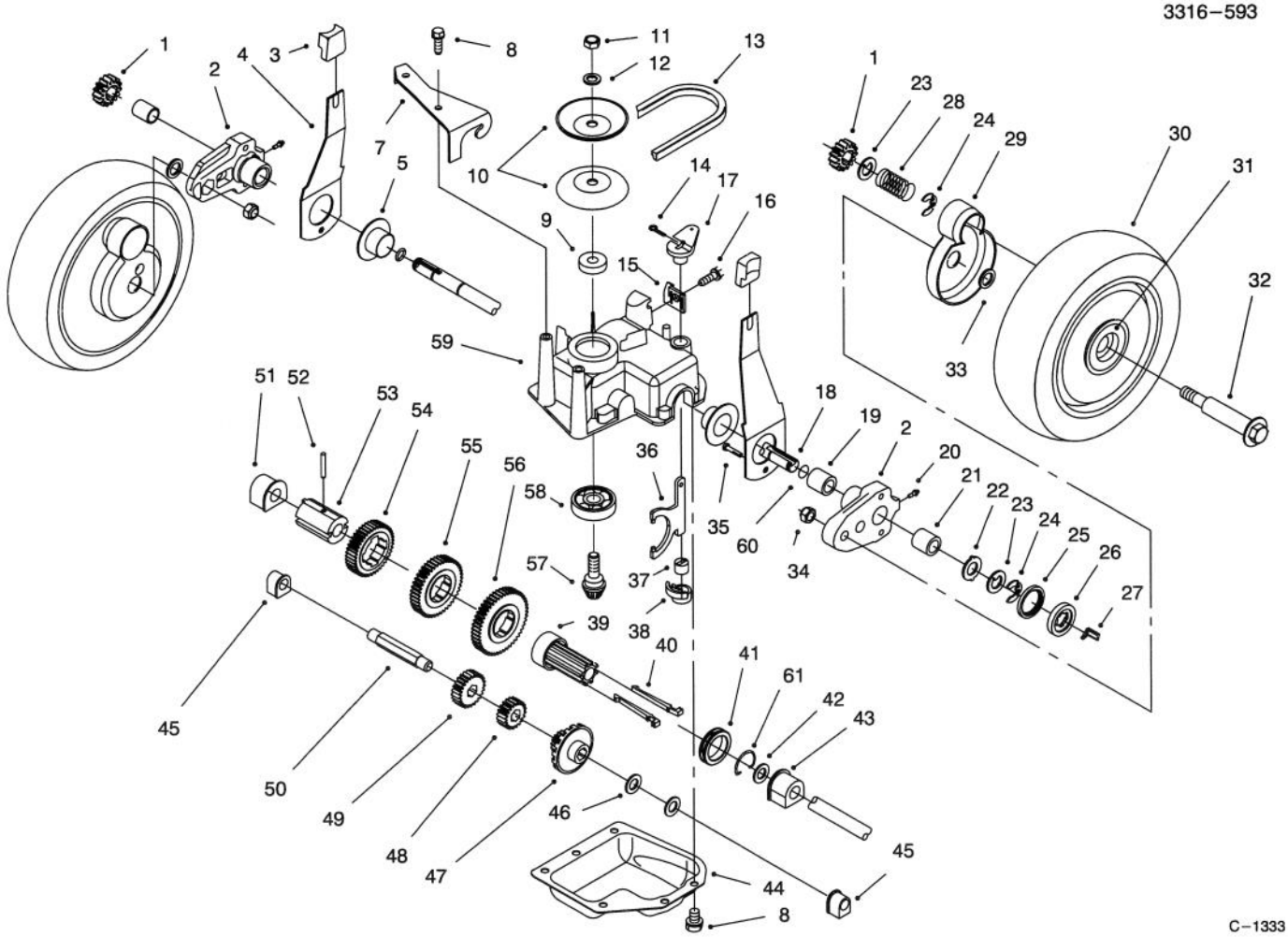

GEAR CASE ASSEMBLY (Continued)

Ref. No.	Part No.	Description	No. Used
49	55–3800	Gear – Pinion	1
50	60–8800	Shaft – Intermediate	1
51	60–8850	Bushing – Output Shaft	1
52	32121–120	Pin – Coil	1
53	60–8790	Sleeve – Gear	1
54	55–3810	Gear – 39 Tooth 3rd Gear	1
55	55–3790	Gear – 44 Tooth 2nd Gear	1

Ref. No.	Part No.	Description	No. Used
56	55–3770	Gear – 49 Tooth 1st Gear	1
57	60–8890	Pinion – Bevel	1
58	38–7820	Bearing – Ball	1
59	60–8710	Gear Case – Upper	1
60	237–153	O–Ring	2
61	65–5250	Clip – Spring	1
*	62–6673	Gear Case Assembly	1

*Not Illustrated

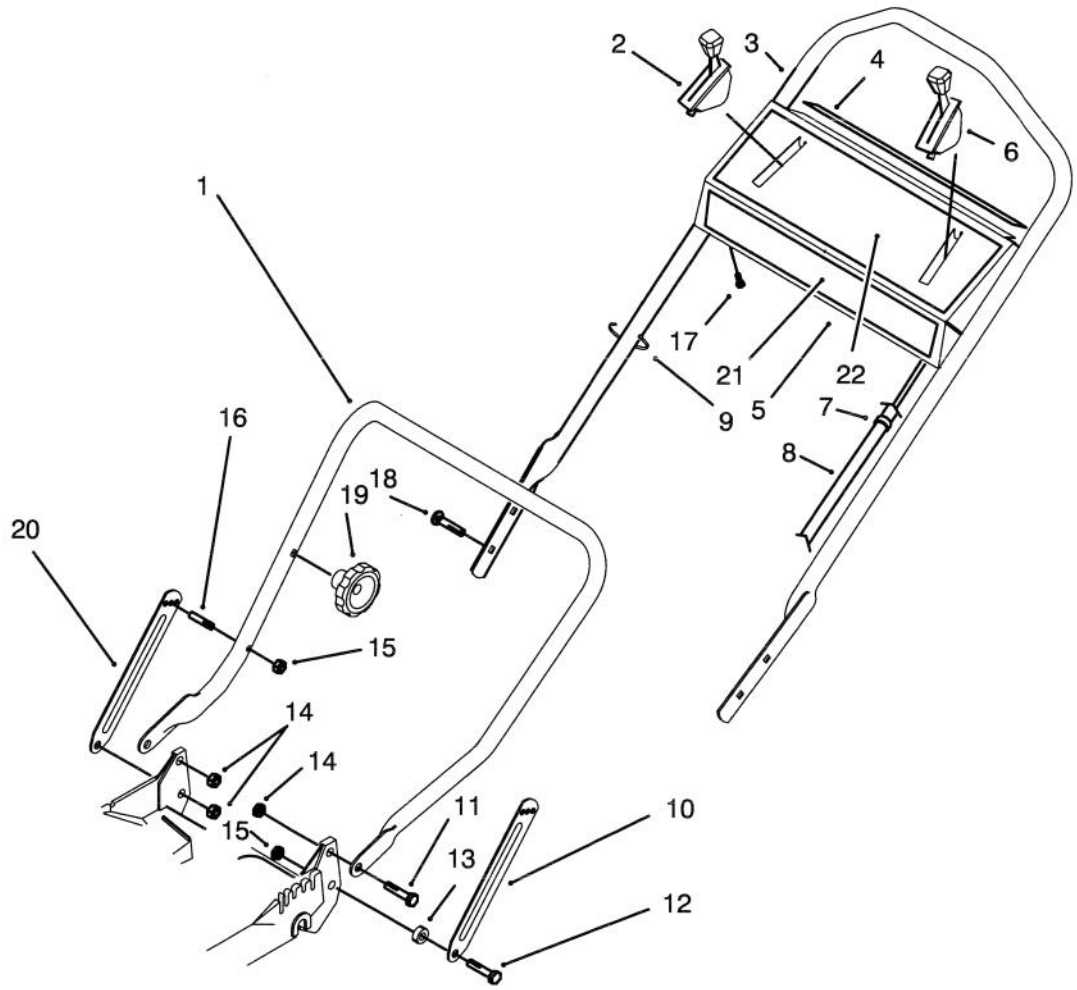

C–1542

HANDLE ASSEMBLY

Ref. No.	Part No.	Description	No. Used
1	82–5530	Lower Handle Ass'y	1
2	76–2712	Control – Ground Speed	1
3	84–8330	Handle – Upper	1
4	66–1790	Decal – Danger	1
5	13–6019	Panel – Control (Incl. Ref. #4 & 22)	1
6	66–0236	Control – Throttle (Bend Type # 3) (Sheath Lg. 62 3/4") (Wire Lg. 2 3/8")	1
7	2412–50	Clip Convoluted Tubing	3
8	46–6440	Cover – Control Cable	1
9	3290–378	Tie – Cable	3

Ref. No.	Part No.	Description	No. Used
10	84–8360	Latch – Handle L.H.	1
11	27–7211	Screw – Shoulder	2
12	27–7210	Screw – Shoulder	2
13	3–3287	Spacer – Handle Latch	2
14	3296–29	Nut – Lock	3
15	3296–47	Nut – Lock	3
†16	49–2750	Pin – Handle	2
17	32144–115	Screw – Tapping	5
18	17–9421	Screw – Handle	2
19	19–4050	Knob – Handle Release	2
20	84–8400	Latch – Handle R.H.	1
21	92–7859	Decal – Toro Panel,	1
22	66–0290	Decal – Instructions	1

†Service Replacement Part

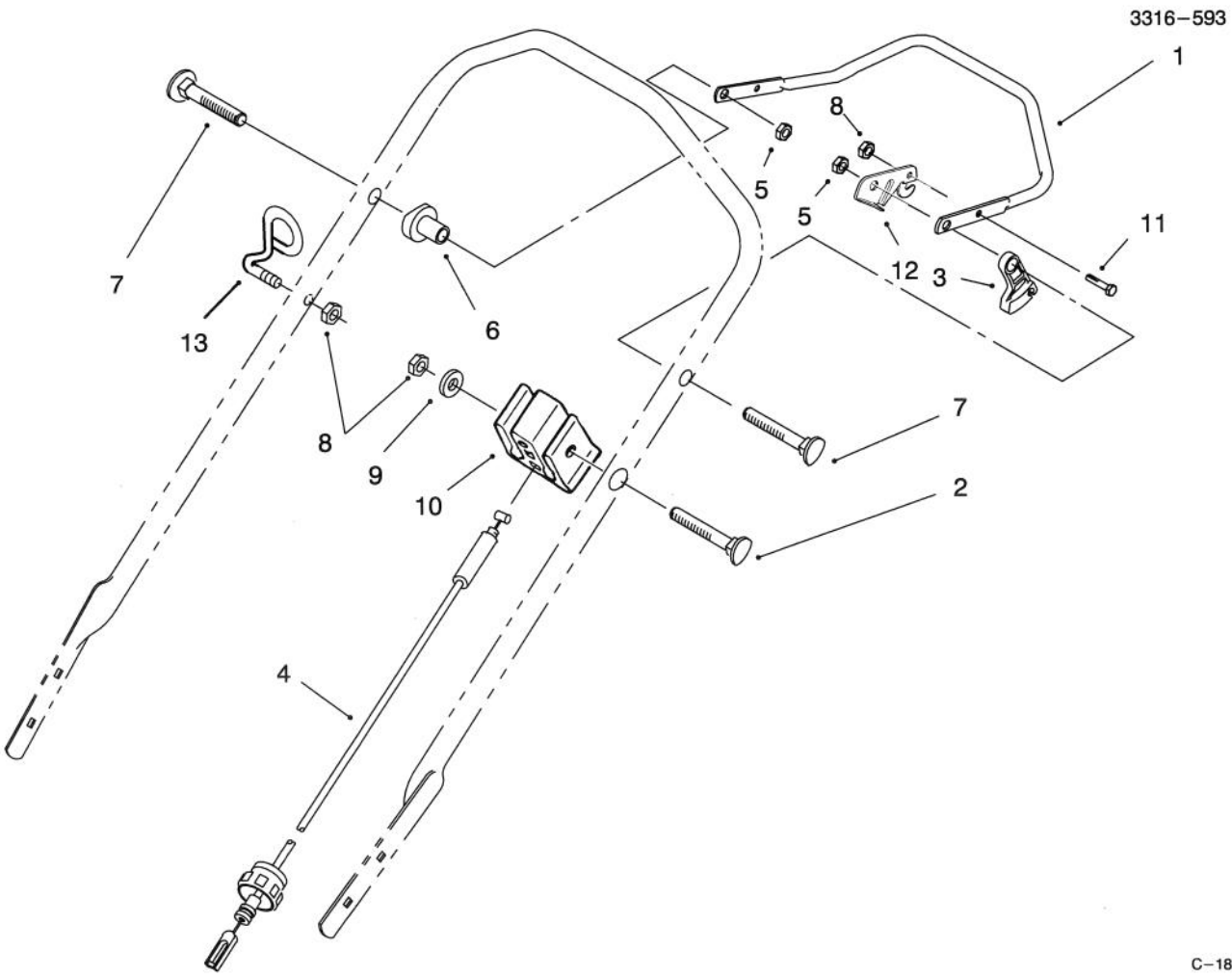

TRACTION CONTROL ASSEMBLY

Ref. No.	Part No.	Description	No. Used
1	52–7430	Bar – Control	1
2	46–6434	Screw – Handle	1
3	46–5520	Lever – Traction	1
4	46–5481	Cable – Traction	1
5	3296–58	Nut – Lock	2
6	49–1630	Support – Spacer	2
7	17–9421	Screw – Handle	2

Ref. No.	Part No.	Description	No. Used
8	3296–42	Nut – Lock	3
9	3256–22	Washer – Flat	1
10	46–6980	Support – Cable	1
11	321–3	Screw – Hex Hd. Cap	1
12	66–5350	Lever – Control	1
13	86–9670	Guide – Rope	1

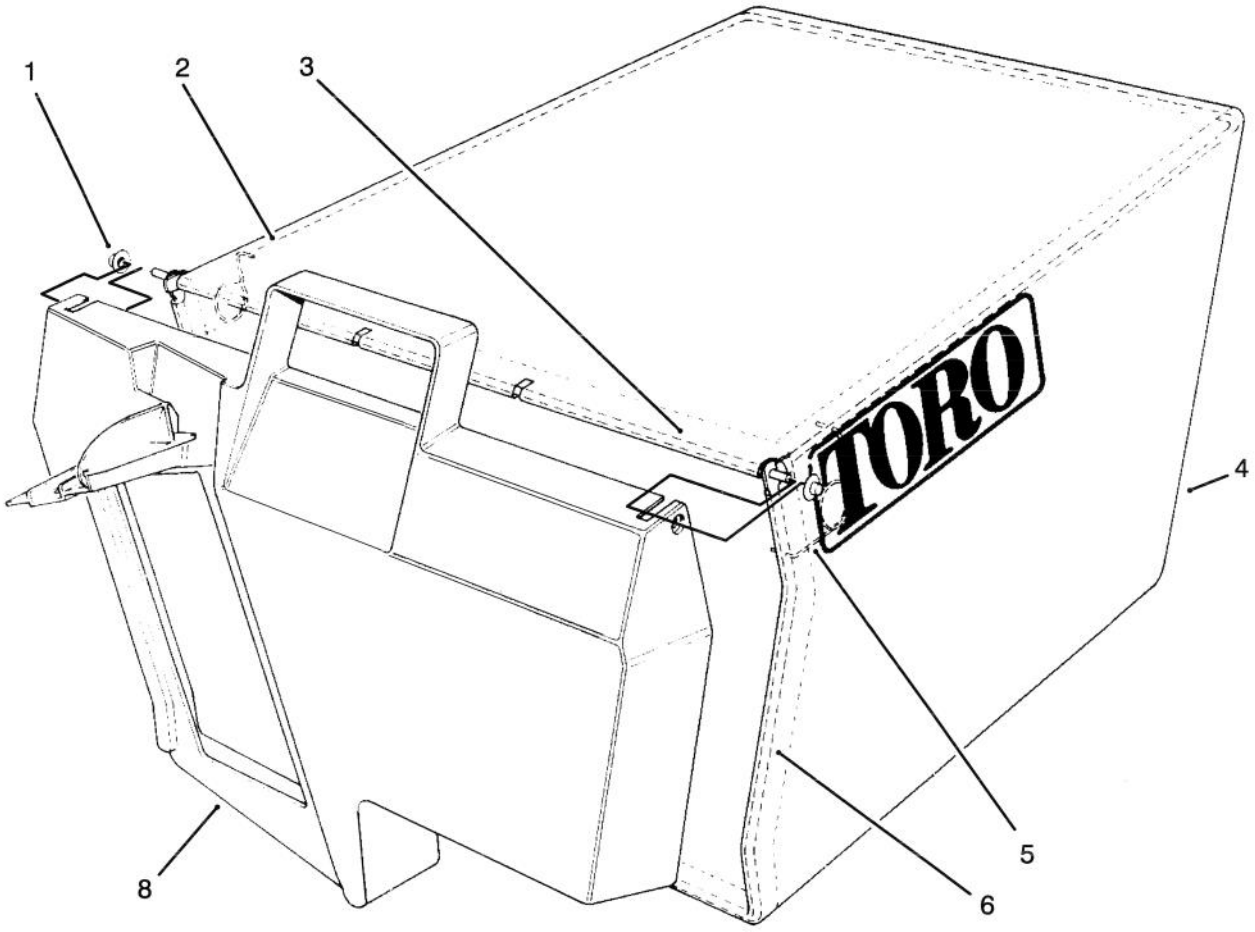

C–1839

GRASS BAG ASSEMBLY NO. 11–0189

Ref. No.	Part No.	Description	No. Used
1	3290–422	Nut – Push	2
2	42–4030	Bag Frame – Upper	1
3	33–4820	Hinge – Bag Door	1
4	8–2759	Bag – Grass	1

Ref. No.	Part No.	Description	No. Used
5	36–6910	Spring	2
6	42–4020	Frame – Bag	1
8	37–1393	Door – Grass Bag	1

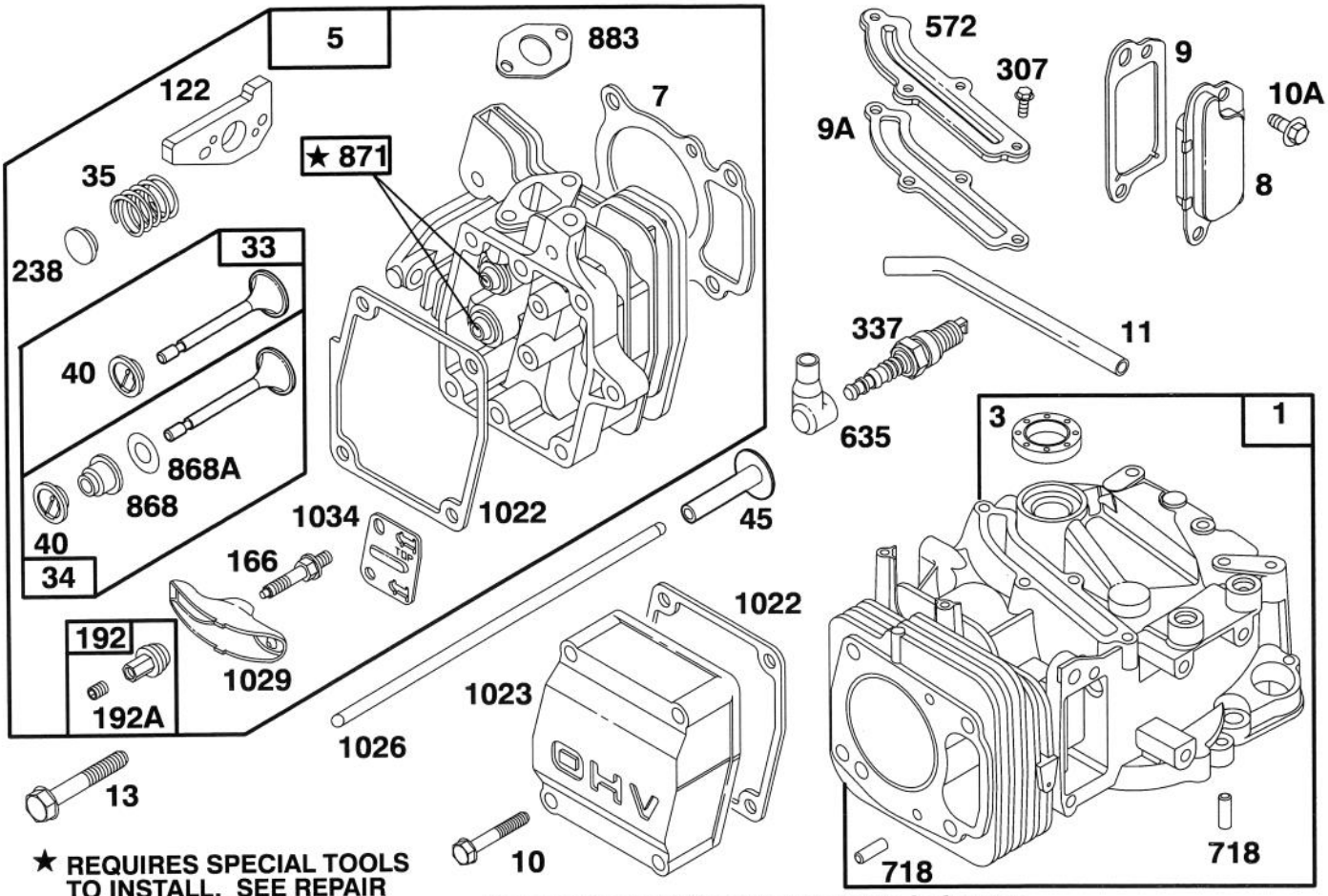

★ REQUIRES SPECIAL TOOLS TO INSTALL. SEE REPAIR INSTRUCTION MANUAL.

Assemblies include all parts shown in frames.

ENGINE GTS 150

Ref. No.	Part No.	Description	No. Used
1	77–7590	Cylinder Assy	1
*3	77–9060	Seal – Oil	1
5	77–7730	Head – Cylinder	1
*7	77–7740	Gasket – Cylinder Head	1
8	77–9300	Breather Assy	1
*9	77–9250	Gasket – Breather	1
*9A	77–7410	Gasket – Breather	1
10	77–7360	Screw – Hex Head (valve cover)	4
10A	77–9200	Screw – Hex Head	2
11	77–7350	Tube – Breather	1
13	77–7630	Screw – Cylinder Head	4
33	77–7860	Valve – Exhaust	1
34	77–7880	Valve – Intake	1
35	77–7810	Spring – Valve	2
40	77–7870	Retainer – Spring	2
45	77–7610	Tappet – Valve	2
†122	77–7820	Adapter Assy	1
166	77–7780	Stud – Rocker Arm	2
192	77–9310	Ball & Screw – Rocker Arm	2
192A	77–9090	Screw – Set	1
238	77–7800	Cap – Valve	2
307	77–7420	Screw – Cover Mtg (breather cover)	4

Ref. No.	Part No.	Description	No. Used
337	77–7330	Plug – Spark	1
572	77–7400	Cover – Breather	1
635	77–7340	Elbow – Spark Plug	1
718	77–7600	Pin – Cylinder	2
*868	77–7890	Seal Assy – Valve	1
*868A	77–7900	Gasket – Valve	1
871	77–7850	Bushing – Guide	1
*883	77–7760	Gasket – Exhaust	1
*1022	77–7320	Gasket – Rocker Cover	1
1023	77–9320	Cover – Valve	1
1026	77–7620	Rod – Push	2
1029	77–7790	Arm – Rocker	2
1034	77–7770	Guide – Push Rod	1
	77–9020	Short Block (Incl. Ref. # 1, 7, 9, 9A, 45, 122, 883, & 1022 pg. 9) (Incl. Ref. # 16, 18, 25, 28, 29, 46, 219, 230, 615, 616 979, & 1024 pg. 10) (Incl. Ref. #163 pg. 12)	1

* Included in Gasket Set–Part No. 77–8900
†Included in Carburetor Overhaul Kit–Part No. 77–8920

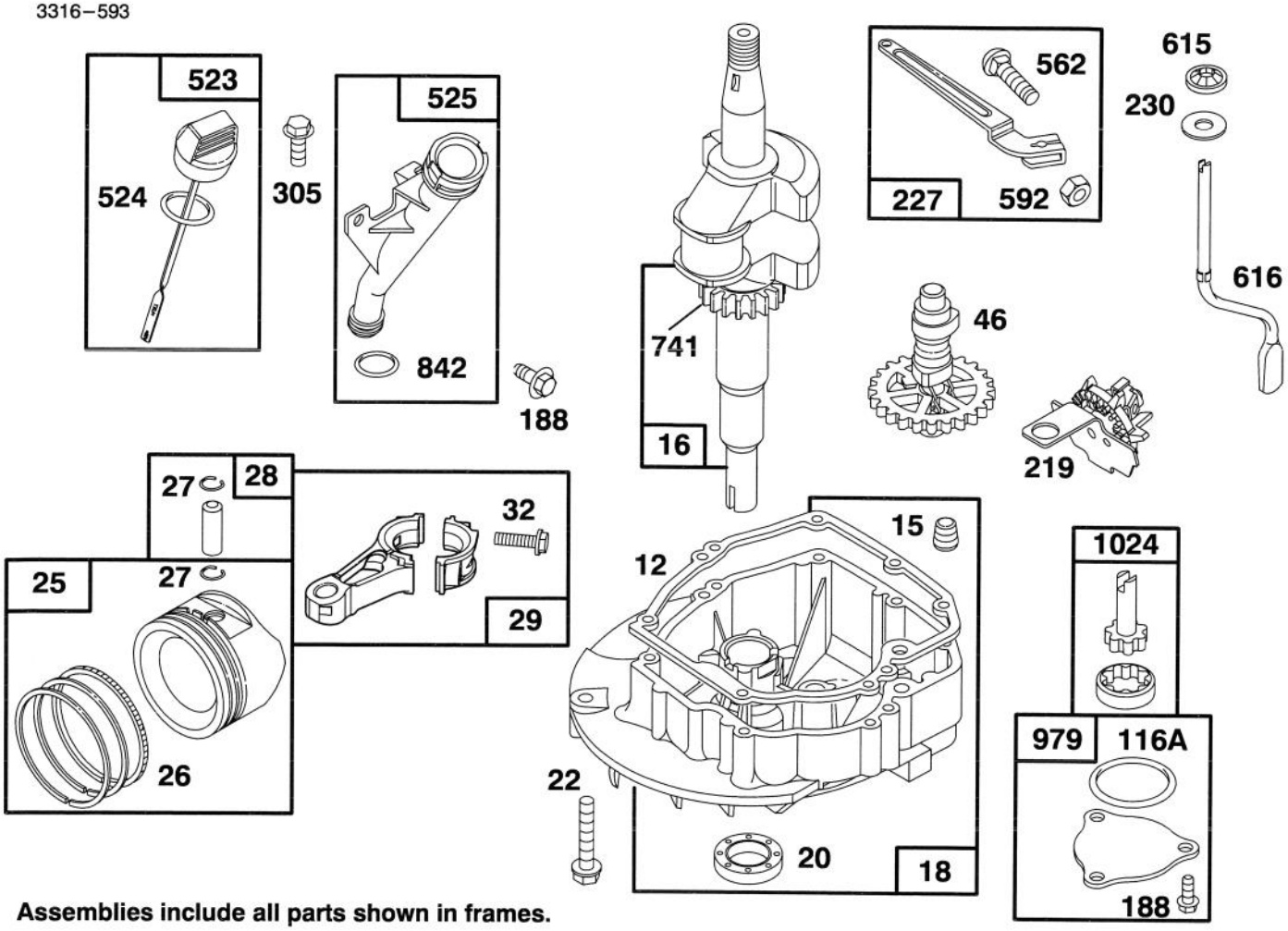

Assemblies include all parts shown in frames.

ENGINE GTS 150

Ref. No.	Part No.	Description	No. Used
*12	77–7550	Gasket – Engine Base	1
15	77–9240	Plug – Pipe	1
16	77–9330	Crankshaft Note: Order Part No. 77–7540 For Timing Gear Key	1
18	77–7560	Base – Engine	1
*20	77–7570	Seal – Oil	1
22	77–9070	Screw– Engine Base	7
25	77–7690	Piston Assy (Std)	1
26	77–7700	Ring Set (Std)	1
27	77–7710	Lock – Piston Pin	2
28	77–9340	Pin Assy – Piston	1
29	77–7670	Rod – Connecting	1
32	77–9350	Screw – Connecting Rod	2
46	77–7490	Gear – Cam	1
*116A	77–7660	O–Ring	1

Ref. No.	Part No.	Description	No. Used
188	77–9360	Screw – Hex Head	5
219	77–7500	Gear – Governor	1
227	77–7370	Lever Assy – Governor	1
230	77–7470	Washer	1
305	77–8310	Screw – Hex Head	2
523	77–7260	Dipstick – Oil	1
*524	77–7270	Seal – O Ring	1
525	77–7290	Tube – Oil Filler	1
562	77–7380	Bolt – Governor Lever	1
592	77–7390	Nut – Hex	1
615	77–7480	Pushnut	1
616	77–7460	Crank – Governor	1
741	77–7530	Gear – Timing	1
*842	77–7300	Seal – O Ring	1
979	77–7650	Cover – Oil Pump	1
1024	77–7640	Pump – Oil	1

* Included in Gasket Set–Part No. 77–8900

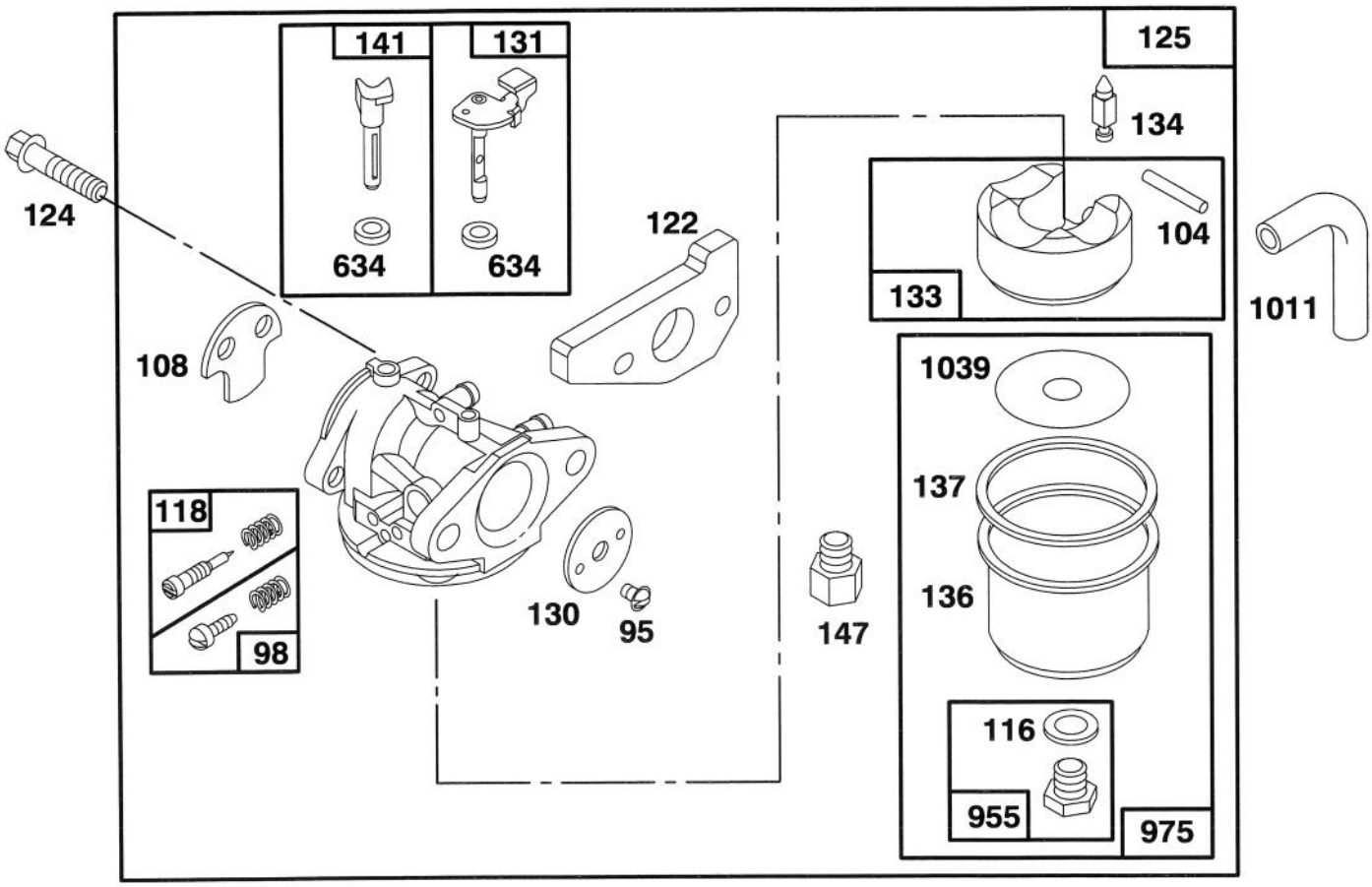

Assemblies include all parts shown in frames.

ENGINE GTS 150

Ref. No.	Part No.	Description	No. Used
95	77–8090	Screw – Valve Mtg	1
98	77–8240	Screw – Idle Adj	1
†104	77–8180	Pin – Float Hinge	1
108	77–8070	Valve – Choke	1
††116	77–8210	Sealing – Gasket	1
†118	77–8230	Valve & Spring – Needle	
†122	77–7820	Adapter Assy	1
124	77–7970	Screw – Hex Head (carb mtg)	2
125	77–8050	Carburetor Assy	1
130	77–8080	Valve – Throttle	1
131	77–8160	Shaft – Throttle	1
133	77–8170	Float – Carburetor	1
†134	77–8110	Valve – Inlet (Includes Seat)	1
136	77–7240	Bowl – Fuel	1
††137	77–8200	Gasket – Float Bowl	1
141	77–8130	Shaft – Choke	1
147	77–8120	Adapter – Jet Note: For High Altitude Jet, Order Part No. 77–9000	1
‡634	77–8150	Washer – Seal	2
955	77–8220	Screw – Hex Head	1
975	77–8190	Bowl Assy – Carburetor	1
1011	77–8040	Tube – Vent	1
†1039	77–7250	Limiter – Float	1

† Included in Carburetor Overhaul Kit–Part No. 77–8920

‡ Included in Carburetor Gasket Kit–Part No. 77–8930

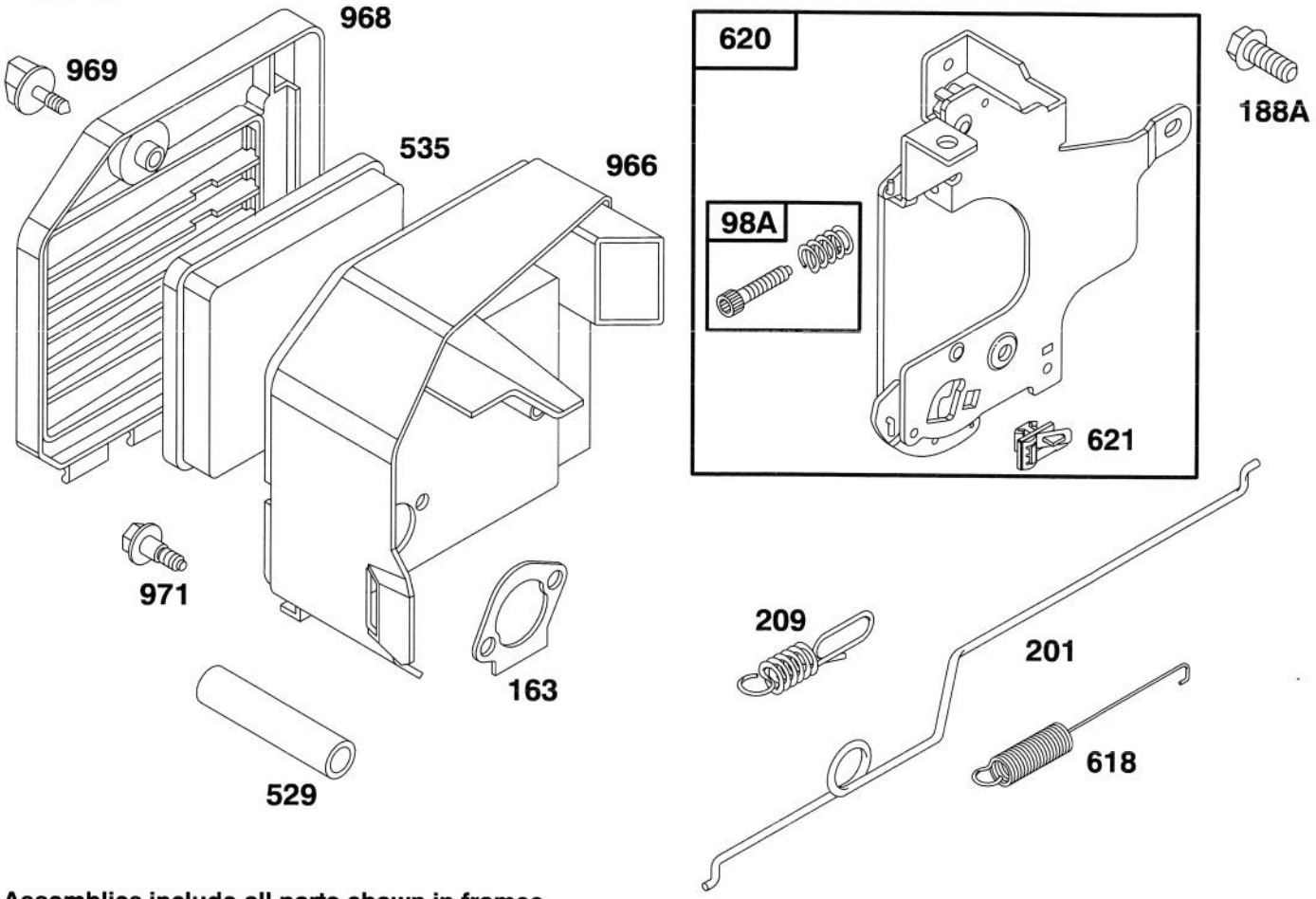

Assemblies include all parts shown in frames.

ENGINE GTS 150

Ref. No.	Part No.	Description	No. Used
98A	77–8020	Screw Assy – Speed Adj	1
*163	77–7960	Gasket – Air Cleaner	1
188A	77–9360	Screw – Hex Head	2
201	77–7980	Link – Governor	1
209	77–7990	Spring – Governor	1
529	77–8030	Tube – Breather	1
535	77–7950	Element – Filter	1
618	77–8140	Spring – Choke	1

Ref. No.	Part No.	Description	No. Used
620	77–8000	Bracket – Carburetor	1
621	77–8010	Switch – Stop	1
966	77–7940	Base Air Cleaner	1
968	77–7040	Cover – Air Cleaner	1
969	77–7920	Screw – Air Cleaner	1
971	77–7930	Screw – Air Cleaner	3

* Included in Gasket Set–Part No. 77–8900

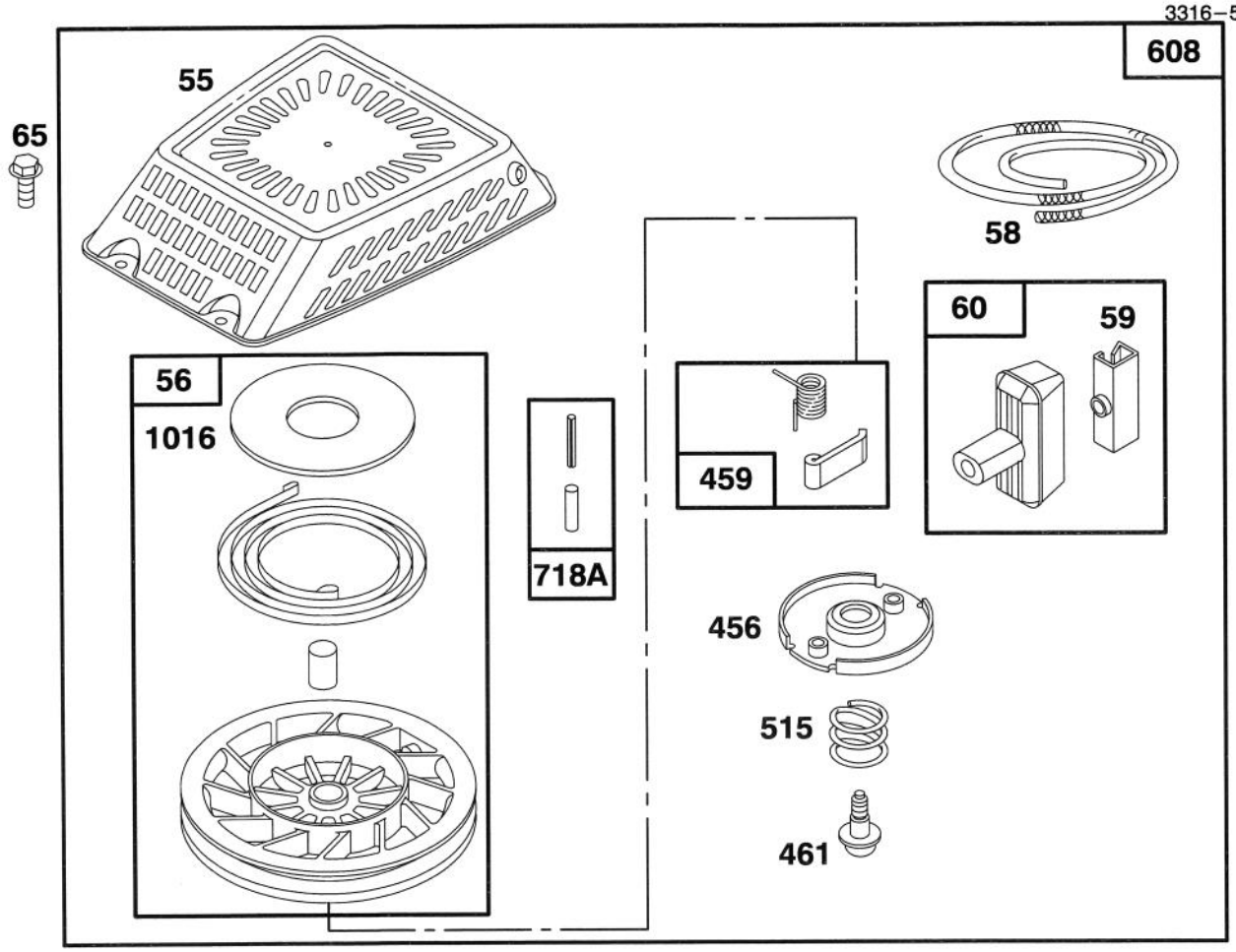

Assemblies include all parts shown in frames.

ENGINE GTS 150

Ref. No.	Part No.	Description	No. Used
55	77–8890	Housing – Rewind Starter	1
56	77–9270	Pulley – Rewind Starter	1
58	77–9370	Rope – Starter (Cut To Suit)	1
59	77–9380	Insert – Rewind Handle	1
60	77–9390	Handle – Rewind Starter	1
65	77–8300	Screw – Hex Head	4

Ref. No.	Part No.	Description	No. Used
456	77–8470	Retainer – Rewind Starter	1
459	77–8530	Pawl – Starter	2
461	77–8490	Screw – Rewind Starter	1
515	77–8500	Spring – Torsion	1
608	77–9400	Starter Assy – Rewind	1
718A	77–8550	Pin – Spring	1
1016	77–8570	Cover – Spring	1

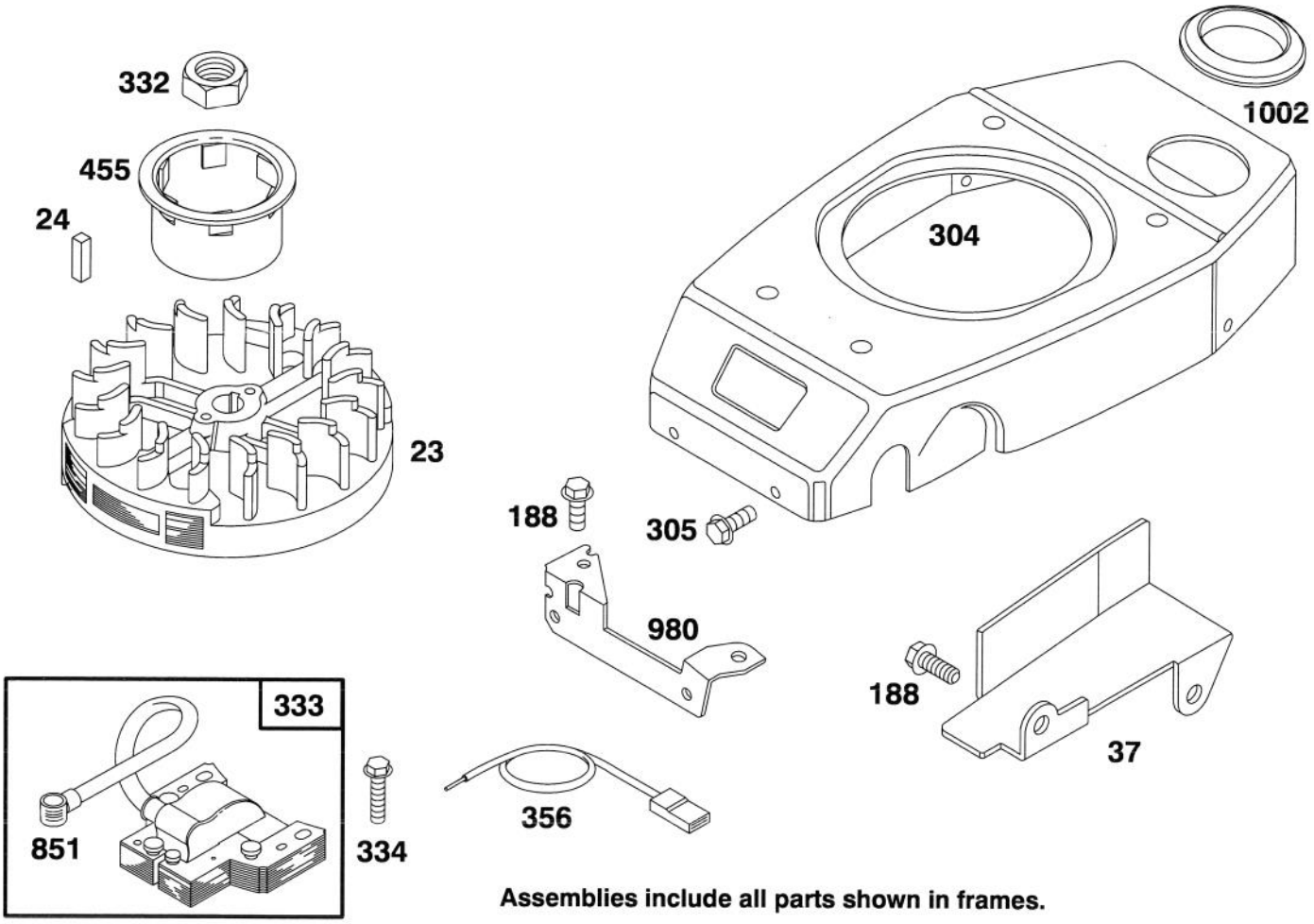

Assemblies include all parts shown in frames.

ENGINE GTS 150

Ref. No.	Part No.	Description	No. Used
23	77–8330	Flywheel – Magneto	1
24	77–8340	Key – Flywheel	1
37	77–7190	Guard – Flywheel	1
188	77–9360	Screw – Hex Head	2
304	77–8270	Housing – Blower	1
305	77–8310	Screw – Hex Head (blower hsg.)	4
332	77–8360	Nut – Flywheel	1

Ref. No.	Part No.	Description	No. Used
333	77–8420	Armature – Magneto	1
334	77–9420	Screw – Armature Mtg.	2
356	77–8400	Wire – Ground	1
455	77–8350	Cup – Starter	1
851	77–8430	Terminal – Spark Plug	1
980	77–7140	Bracket – Blower Housing	1
1002	77–7180	Grommet	1

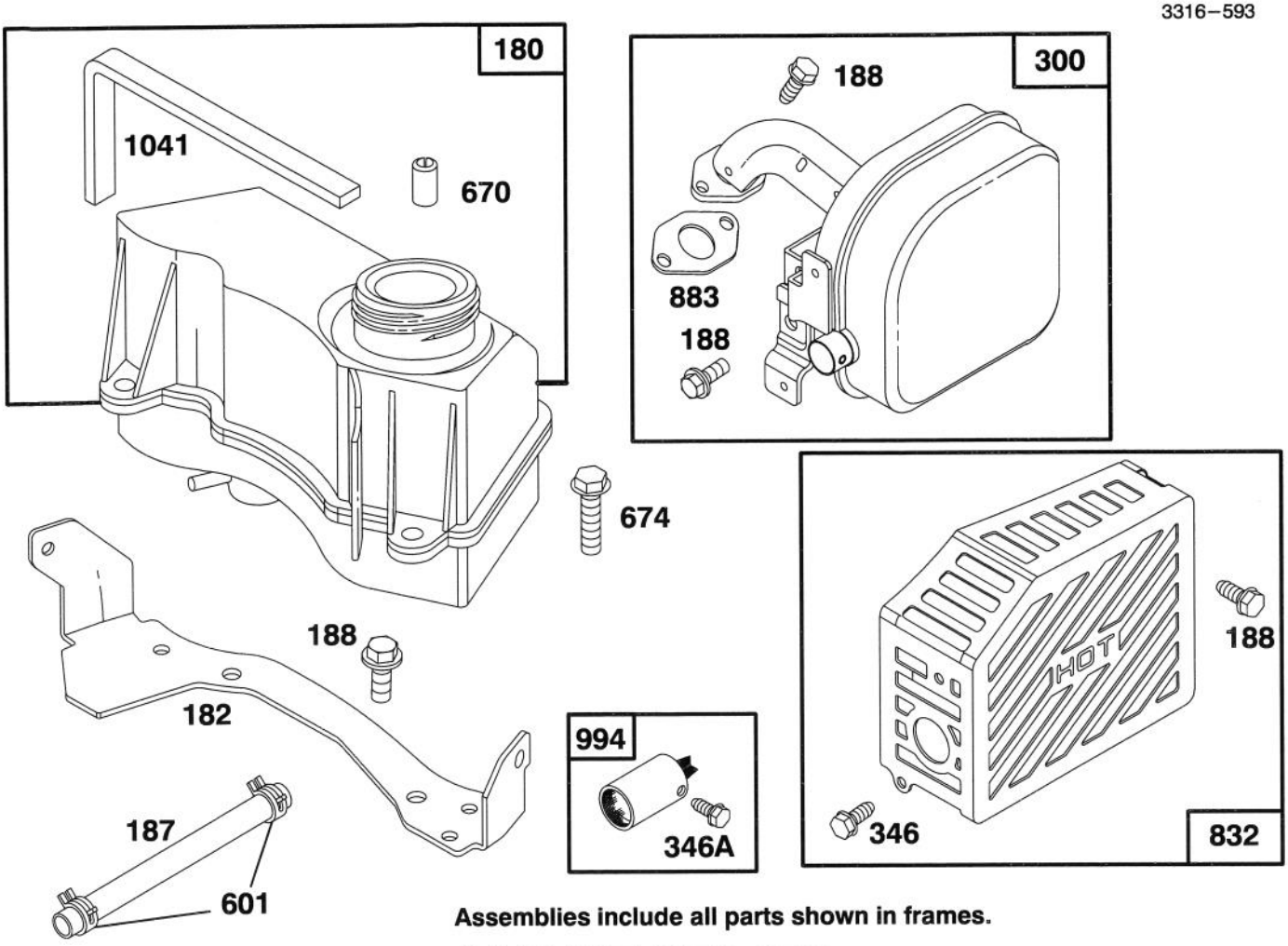

Assemblies include all parts shown in frames.

ENGINE GTS 150

Ref. No.	Part No.	Description	No. Used
180	77–8580	Tank Assy – Fuel	1
182	77–7170	Bracket – Fuel Tank	1
187	77–8620	Hose – Fuel (Cut To Suit)	1
188	77–7450	Screw – Hex Head	7
300	77–8640	Muffler – Exhaust	1
346	77–8650	Screw – Hex	2
346A	77–9050	Screw – Arrester Mtg.	1

Ref. No.	Part No.	Description	No. Used
601	77–8630	Clamp – Fuel Hose	2
670	77–9030	Spacer – Fuel Tank (includes 2)	1
674	77–8600	Screw – Tank Mtg	2
832	77–8660	Guard – Muffler	1
*883	77–7760	Gasket – Exhaust	1
994	77–9040	Arrester – Spark	1
*1041	77–8590	Seal – Foam	1

* Included in Gasket Set–Part No. 77–8900

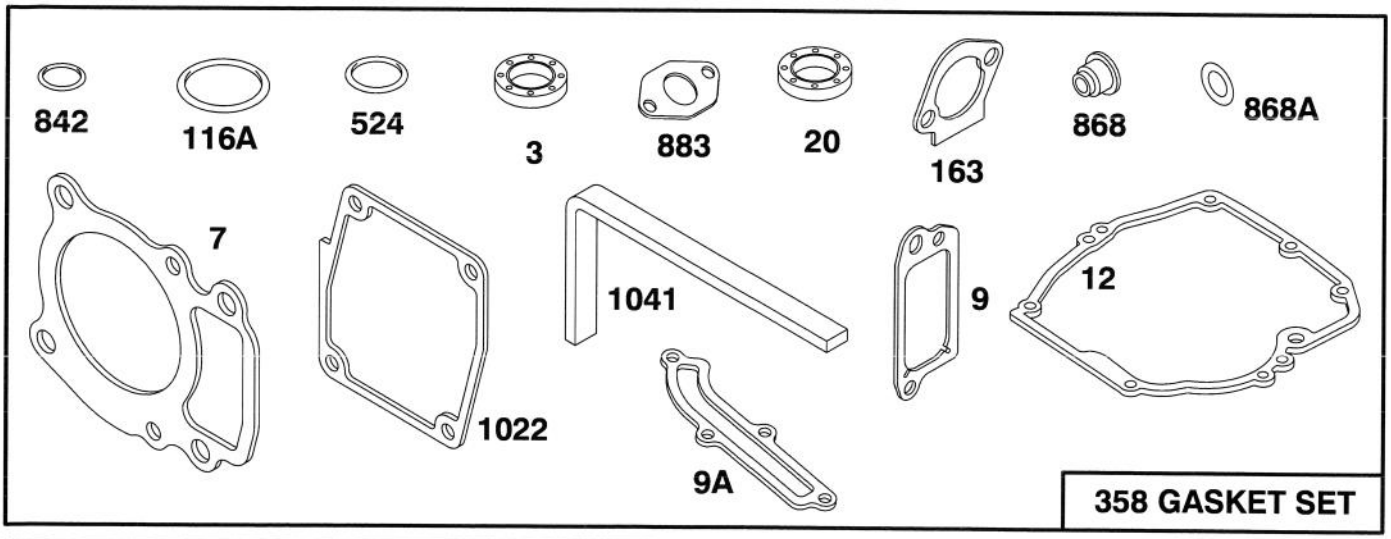

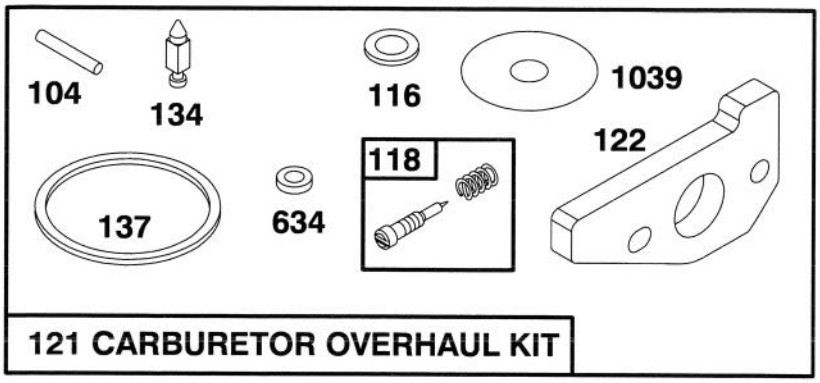

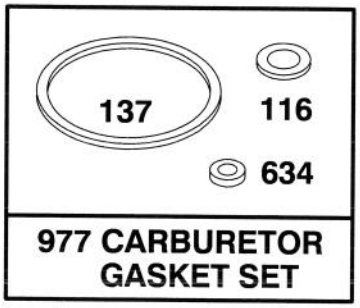

Assemblies include all parts shown in frames.

ENGINE GTS 150

Ref. No.	Part No.	Description	No. Used
*3	77–9060	Seal – Oil	1
*7	77–7740	Gasket – Cylinder Head	1
*9	77–9250	Gasket – Breather	1
*9A	77–7410	Gasket – Breather	1
*12	77–7550	Gasket – Engine Base	1
*20	77–7570	Seal – Oil	1
†104	77–8180	Pin – Float Hinge	1
†‡116	77–8210	Sealing – Gasket	1
*116A	77–7660	O–Ring	1
†118	77–8230	Valve & Spring – Needle	1
121	77–8920	Overhaul Kit – Carburetor	1
†122	77–7820	Adapter Assy.	1
†134	77–8110	Valve – Inlet (Includes Seat)	1
†‡137	77–8200	Gasket – Float Bowl	1

Ref. No.	Part No.	Description	No. Used
*163	77–7960	Gasket – Air Cleaner	1
358	77–8900	Gasket Set	1
*524	77–7270	Seal – O Ring	1
‡634	77–8150	Washer – Seal	2
*842	77–7300	Seal – O Ring	1
*868	77–7890	Seal Assy. – Valve	1
*868A	77–7900	Seal – Valve	1
*883	77–7760	Gasket – Exhaust	1
977	77–8930	Carburetor Gasket Set	1
*1022	77–7320	Gasket – Rocker Cover	1
†1039	77–7250	Limiter – Float	1
*1041	77–8590	Seal – Foam	1

* Included in Gasket Set–Part No. 77–8900 ‡ Included in Carburetor Gasket Kit–Part No. 77–8930
†Included in Carburetor Overhaul Kit–Part No. 77–8920

TORO PART NUMBER INDEX

110352	Gas Cap Assembly	3	9	1
3–3287	Spacer – Handle Latch	6	13	2
8–2759	Bag – Grass	8	4	1
13–6019	Panel – Control	6	5	1
14–9949	Wheel & Tire Assembly	2	33	2
14–9959	Wheel – Tire & Gear Ass'y	4	30	2
16–1599	Housing Assembly	2	41	1
17–9421	Screw – Handle	7	7	2
17–9421	Screw – Handle	6	18	2
19–4050	Knob – Handle Release	6	19	2
25–7740	Knob – Arm	4	3	2
25–7740	Knob – Spring Arm	2	30	2
26–0670	Screw – Blade	3	14	1
27–6232	Bolt – Wheel	2	35	2
27–6232	Wheel Bolt	4	32	2
27–6250	Bushing	2	34	4
27–6250	Bushing – Wheel	4	31	4
27–7210	Screw – Shoulder	6	12	2
27–7211	Screw – Shoulder	6	11	2
29–9570	Bushing – Yoke	4	37	1
33–3208	Rod – Shield	1	28	1
33–4820	Hinge – Bag Door	8	3	1
36–4780	Washer – Thrust	4	42	1
36–4791	Washer – Thrust	4	46	2
36–6910	Spring	8	5	2
37–1393	Door – Grass Bag	8	8	1
37–7260	Screw – Special Cap	1	23	2
38–7820	Bearing – Ball	5	58	1
40–1940	Washer – Wheel	2	36	4
42–3520	End Cap	4	5	2
42–4020	Frame – Bag	8	6	1
42–4030	Bag Frame – Upper	8	2	1
44–0580	Shield –Rear	1	27	1
46–5400	Shield – Front	2	42	1
46–5481	Cable – Traction	7	4	1
46–5520	Lever – Traction	7	3	1
46–6434	Screw – Handle	7	2	1
46–6440	Cover – Control Cable	6	8	1
46–6811	Screw w/Washer	1	9	3
46–6980	Support – Cable	7	10	1
46–7030	Retainer – Cable	1	26	1
46–8090	Screw – Hex Washer Hd.	1	14	2
48–2060	Needle Bearing	4	21	2
49–1630	Support – Spacer	7	6	2
49–2040	Screw – Self Tapping	4	8	8
49–2750	Pin – Handle	6	16	2
52–7430	Bar – Control	7	1	1
55–3760	Gear – Pinion 15 Tooth	4	47	1
55–3770	Gear – 49 Tooth 1st Gear	5	56	1
55–3780	Gear – Pinion 20 Tooth	4	48	1
55–3790	Gear – 44 Tooth 2nd Gear	5	55	1
55–3800	Gear – Pinion	5	49	1
55–3810	Gear – 39 Tooth 3rd Gear	5	54	1
60–8710	Gear Case – Upper	5	59	1
60–8730	Cover – Gear Case	4	44	1
60–8750	Bushing – Int. Shaft	4	45	2
60–8770	Bushing – Output Shaft	4	43	1
60–8790	Sleeve – Gear	5	53	1
60–8800	Shaft – Intermediate	5	50	1
60–8810	Retainer – Shift Fork	4	38	1
60–8821	Lever – Shift	4	17	1
60–8840	Pulley – Half	4	10	2
60–8850	Bushing – Output Shaft	5	51	1
60–8870	Yoke – Shift	4	36	1
60–8890	Pinion – Bevel	5	57	1
62–3860	Decal – DIN	1	4	1
62–3900	V–Belt	4	13	1
62–4320	Bracket – Belt Guide	4	7	1
62–6660	Spacer	4	9	1
62–6673	Gear Case Assembly	5	*	1
62–7540	Retainer – Blade	3	10	1
62–7550	Pulley – Driver	3	15	1
63–8701	Pivot Arm Assembly	4	2	2
63–8720	Spring Arm Assembly	4	4	2
65–2720	Ring – Retaining	4	24	4
65–4710	Ring – Friction	4	25	2
65–4720	Spring	4	28	2
65–4730	Thrust Washer	4	22	2
65–4740	Thrust Washer	4	23	4
65–4750	Pinion	4	1	2
65–4760	Washer – Clutch	4	26	2
65–4770	Shaft – Output	4	18	1
65–5250	Clip – Spring	5	61	1
66–0236	Control – Throttle	6	6	1
66–0290	Decal – Instructions	6	22	1
66–0560	Screw – Pivot	2	32	2
66–0570	Guide – Belt	3	5	1
66–0580	Arm – Pivot	2	37	2
66–0680	Decal – French Regulation	1	20	1
66–1790	Decal – Danger	6	4	1
66–5350	Lever – Control	7	12	1
66–6040	Key – Rocker R.H.	4	*	1
66–6050	Key – Rocker L.H.	4	27	1
70–9760	Bushing	4	19	2
71–0560	Spring Arm Ass'y – R.H.	1	1	1
71–0570	Spring Arm Ass'y – L.H.	2	31	1
71–9350	Bracket – Spring	1	8	1
74–1660	Cover – Wheel	4	29	2
74–1671	Spacer – Wheel Cover	4	33	2
76–0760	Key – Shift	4	40	2
76–0770	Collar – Shift	4	41	1
76–0780	Sleeve – Shift Key	4	39	1
76–2712	Control – Ground Speed	6	2	1
76–4570	Plate – Latch	1	13	1
76–4640	Latch – Plate	1	18	1
76–4650	Grip – Latch	1	16	1
76–4660	Spring – Door	1	10	1
77–0200	Discharge Door Assembly	1	12	1
77–0502	Plug Assembly	1	15	1
77–7040	Cover – Air Cleaner	12	968	1
77–7140	Bracket – Blower Housing	14	980	1
77–7170	Bracket – Fuel Tank	15	182	1
77–7180	Grommet	14	1002	1
77–7190	Guard – Flywheel	14	37	1
77–7240	Bowl – Fuel	11	136	1
77–7250	Limiter – Float	16	1039	1
77–7250	Limiter – Float	11	1039	1
77–7260	Dipstick – Oil	10	523	1
77–7270	Seal – O Ring	10	*524	1
77–7270	Seal – O Ring	16	*524	1
77–7290	Tube – Oil Filler	10	525	1
77–7300	Seal – O Ring	10	*842	1
77–7300	Seal – O Ring	16	*842	1
77–7320	Gasket – Rocker Cover	16	*1022	1
77–7320	Gasket – Rocker Cover	9	*1022	1
77–7330	Plug – Spark	9	337	1
77–7340	Elbow – Spark Plug	9	635	1
77–7350	Tube – Breather	9	11	1

*Not Illustrated

TORO PART NUMBER INDEX (Cont.)

Part No.	Description	Pg. No.	Ref. No.	Qty.
77-7360	Screw – Hex Head	9	10	4
77-7370	Lever Assy – Governor	10	227	1
77-7380	Bolt – Governor Lever	10	562	1
77-7390	Nut – Hex	10	592	1
77-7400	Cover – Breather	9	572	1
77-7410	Gasket – Breather	16	*9A	1
77-7410	Gasket – Breather	9	*9A	1
77-7420	Screw – Cover Mtg	9	307	4
77-7450	Screw – Hex Head	15	188	7
77-7460	Crank – Governor	10	616	1
77-7470	Washer	10	230	1
77-7480	Pushnut	10	615	1
77-7490	Gear – Cam	10	46	1
77-7500	Gear – Governor	10	219	1
77-7530	Gear – Timing	10	741	1
77-7550	Gasket – Engine Base	10	*12	1
77-7550	Gasket – Engine Base	16	*12	1
77-7560	Base – Engine	10	18	1
77-7570	Seal – Oil	10	*20	1
77-7570	Seal – Oil	16	*20	1
77-7590	Cylinder Assy	9	1	1
77-7600	Pin – Cylinder	9	718	2
77-7610	Tappet – Valve	9	45	2
77-7620	Rod – Push	9	1026	2
77-7630	Screw – Cylinder Head	9	13	4
77-7640	Pump – Oil	10	1024	1
77-7650	Cover – Oil Pump	10	979	1
77-7660	O-Ring	10	*116A	1
77-7660	O-Ring	16	*116A	1
77-7670	Rod – Connecting	10	29	1
77-7690	Piston Assy (Std)	10	25	1
77-7700	Ring Set (Std)	10	26	1
77-7710	Lock – Piston Pin	10	27	2
77-7730	Head – Cylinder	9	5	1
77-7740	Gasket – Cylinder Head	16	*7	1
77-7740	Gasket – Cylinder Head	9	*7	1
77-7760	Gasket – Exhaust	16	*883	1
77-7760	Gasket – Exhaust	15	*883	1
77-7760	Gasket – Exhaust	9	*883	1
77-7770	Guide – Push Rod	9	1034	1
77-7780	Stud – Rocker Arm	9	166	2
77-7790	Arm – Rocker	9	1029	2
77-7800	Cap – Valve	9	238	2
77-7810	Spring – Valve	9	35	2
77-7820	Adapter Assy	11	122	1
77-7820	Adapter Assy	9	122	1
77-7820	Adapter Assy.	16	122	1
77-7850	Bushing – Guide	9	871	1
77-7860	Valve – Exhaust	9	33	1
77-7870	Retainer – Spring	9	40	2
77-7880	Valve – Intake	9	34	1
77-7890	Seal Assy – Valve	9	*868	1
77-7890	Seal Assy. – Valve	16	*868	1
77-7900	Gasket – Valve	9	*868A	1
77-7900	Seal – Valve	16	*868A	1
77-7920	Screw – Air Cleaner	12	969	1
77-7930	Screw – Air Cleaner	12	971	3
77-7940	Base Air Cleaner	12	966	1
77-7950	Element – Filter	12	535	1
77-7960	Gasket – Air Cleaner	12	*163	1
77-7960	Gasket – Air Cleaner	16	*163	1
77-7970	Screw – Hex Head	11	124	2
77-7980	Link – Governor	12	201	1
77-7990	Spring – Governor	12	209	1
77-8000	Bracket – Carburetor	12	620	1
77-8010	Switch – Stop	12	621	1
77-8020	Screw Assy – Speed Adj	1298	A	1
77-8030	Tube – Breather	12	529	1
77-8040	Tube – Vent	11	1011	1
77-8050	Carburetor Assy	11	125	1
77-8070	Valve – Choke	11	108	1
77-8080	Valve – Throttle	11	130	1
77-8090	Screw – Valve Mtg	11	95	1
77-8110	Valve – Inlet	11	134	1
77-8110	Valve – Inlet	16	134	1
77-8120	Adapter – Jet	11	147	1
77-8130	Shaft – Choke	11	141	1
77-8140	Spring – Choke	12	618	1
77-8150	Washer – Seal	11	634	2
77-8150	Washer – Seal	16	634	2
77-8160	Shaft – Throttle	11	131	1
77-8170	Float – Carburetor	11	133	1
77-8180	Pin – Float Hinge	11	104	1
77-8180	Pin – Float Hinge	16	104	1
77-8190	Bowl Assy – Carburetor	11	975	1
77-8200	Gasket – Float Bowl	11	137	1
77-8200	Gasket – Float Bowl	16	137	1
77-8210	Sealing – Gasket	11	116	1
77-8210	Sealing – Gasket	16	116	1
77-8220	Screw – Hex Head	11	955	1
77-8230	Valve & Spring – Needle	11	118	
77-8230	Valve & Spring – Needle	16	118	1
77-8240	Screw – Idle Adj	11	98	1
77-8270	Housing – Blower	14	304	1
77-8300	Screw – Hex Head	13	65	4
77-8310	Screw – Hex Head	10	305	2
77-8310	Screw – Hex Head	14	305	4
77-8330	Flywheel – Magneto	14	23	1
77-8340	Key – Flywheel	14	24	1
77-8350	Cup – Starter	14	455	1
77-8360	Nut – Flywheel	14	332	1
77-8400	Wire – Ground	14	356	1
77-8420	Armature – Magneto	14	333	1
77-8430	Terminal – Spark Plug	14	851	1
77-8470	Retainer – Rewind Starter	13	456	1
77-8490	Screw – Rewind Starter	13	461	1
77-8500	Spring – Torsion	13	515	1
77-8530	Pawl – Starter	13	459	2
77-8550	Pin – Spring	13	718A	1
77-8570	Cover – Spring	13	1016	1
77-8580	Tank Assy – Fuel	15	180	1
77-8590	Seal – Foam	15	*1041	1
77-8590	Seal – Foam	16	*1041	1
77-8600	Screw – Tank Mtg	15	674	2
77-8620	Hose – Fuel	15	187	1
77-8630	Clamp – Fuel Hose	15	601	2
77-8640	Muffler – Exhaust	15	300	1
77-8650	Screw – Hex	15	346	2
77-8660	Guard – Muffler	15	832	1
77-8890	Housing – Rewind Starter	13	55	1
77-8900	Gasket Set	16	358	1
77-8920	Overhaul Kit – Carburetor	16	121	1
77-8930	Carburetor Gasket Set	16	977	1
77-9020	Short Block	9		1
77-9030	Spacer – Fuel Tank	15	670	1
77-9040	Arrester – Spark	15	994	1
77-9050	Screw – Arrester Mtg.	15	346A	1
77-9060	Seal – Oil	16	*3	1

*Not Illustrated

TORO PART NUMBER INDEX (Cont.)

Part No.	Description	Pg. No.	Ref. No.	Qty.
77–9060	Seal – Oil	9	*3	1
77–9070	Screw– Engine Base	10	22	7
77–9090	Screw – Set	9	192A	1
77–9200	Screw – Hex Head	9	10A	2
77–9240	Plug – Pipe	10	15	1
77–9250	Gasket – Breather	16	*9	1
77–9250	Gasket – Breather	9	*9	1
77–9270	Pulley – Rewind Starter	13	56	1
77–9300	Breather Assy	9	8	1
77–9310	Ball & Screw – Rocker	9	192	2
77–9320	Cover – Valve	9	1023	1
77–9330	Crankshaft	10	16	1
77–9340	Pin Assy – Piston	10	28	1
77–9350	Screw – Connecting Rod	10	32	2
77–9360	Screw – Hex Head	10	188	5
77–9360	Screw – Hex Head	12	188A	2
77–9360	Screw – Hex Head	14	188	2
77–9370	Rope – Starter	13	58	1
77–9380	Insert – Rewind Handle	13	59	1
77–9390	Handle – Rewind Starter	13	60	1
77–9400	Starter Assy – Rewind	13	608	1
77–9420	Screw – Armature Mtg.	14	334	2
80–3770	Retainer – Door	1	11	1
82–5530	Lower Handle Ass'y	6	1	1
82–5680	Bracket – Traction Adjust.	1	25	1
82–8780	Cable – Retainer	4	15	1
82–9151	Tunnel – Discharge	1	7	1
82–9910	Belt Cover	1	24	1
84–8330	Handle – Upper	6	3	1
84–8360	Latch – Handle L.H.	6	10	1
84–8400	Latch – Handle R.H.	6	20	1
86–7990	Screw – Clamp	3	2	1
86–9670	Guide – Rope	7	13	1
91–2256	Blade	3	11	1
92–1599	Stiffener – Blade	3	12	1
92–1720	Plate – Kicker Rt. Front	2	43	1
92–1730	Plate – Kicker Left Front	1	2	1
92–1750	Plate – Kicker Left Rear	1	19	1
92–2289	Plate – Toro	3	8	1
92–7663	Cover – Wheel	2	44	1
92–7856	Decal – H.O.C.	1	29	4
92–7857	Decal – Recoil	3	4	1
92–7858	Decal – Deck	2	40	1
92–7859	Decal – Toro Panel,	6	21	1
92–8872	Engine	3	3	1
92–9077	Screw – Hex Washer Hd.	1	5	1
237–153	O–Ring	5	60	2
2210–249	Clamp – Throttle	3	1	1
2210–316	Stop – Rope	3	16	1
2412–50	Clip Convoluted Tubing	6	7	3
302–56	Fitting – Grease	4	20	2
321–3	Screw – Hex Hd. Cap	7	11	1
3253–22	Washer – Lock	3	13	1
3256–22	Washer – Flat	7	9	1
3256–24	Washer – Flat	4	12	1
3272–10	Pin – Cotter	4	14	1
3290–378	Tie – Cable	6	9	3
3290–422	Nut – Push	8	1	2
3295–35	Rivet	1	17	1
3296–5	Locknut	4	11	1
3296–6	Locknut	4	34	2
3296–6	Nut – Lock	2	38	4
3296–29	Nut – Lock	6	14	3
3296–42	Nut – Lock	7	8	3
3296–47	Nut – Lock	6	15	3
3296–58	Nut – Lock	7	5	2
32121–120	Pin – Coil	5	52	1
32144–70	Screw – Hex Washer Hd.	3	6	2
32144–70	Screw – Hex Washer Hd.	1	22	5
32144–70	Screw – Thread Forming	4	16	1
32144–85	Screw	4	35	2
32144–85	Screw – Hex Hd. Cap	2	39	2
32144–102	Screw – Thread Forming	3	7	3
32144–111	Screw – Pan Hd.	1	3	6
32144–115	Screw – Tapping	6	17	5

OPTIONAL EQUIPMENT

Side Discharge Kit ..... Model No. 59110
Wear Plate Kit ..... Part No. 49–4080
Dethatcher Kit ..... Model No. 59131
Spark Arrestor ..... Part No. 77–9040

*Not Illustrated

PRODUCT CHANGES

In an effort to make improvements available to TORO owners as quickly as possible, minor changes are incorporated into Toro's products from time to time that do not become immediately shown in the Parts Catalog. If such a change has been made in your unit, which is not reflected in your manual, see your TORO Distributor or his Authorized TORO Service Dealer for information and part numbers.

COUNTRIES OTHER THAN THE UNITED STATES OR CANADA

Customers who have purchased TORO products exported from the United States or Canada should contact their Toro Distributor (Dealer) to obtain guarantee policies for your country, province or state. If for any reason you are dissatisfied with your Distributor's service or have difficulty obtaining guarantee information, contact the TORO importer. If all other remedies fail, you may contact us at The Toro Company.

MAINTENANCE RECORD

Date								

Compliance with Radio Interference Regulations Certified.
Certifie Conforme au Reglement sur le Brouillage Radioelectrique.

Litho in U.S.A.