FORM NO. 3316–624

TORO®

MODEL NO. 20766B–4900001 & UP

PARTS CATALOG

21" RECYCLER®
Mower

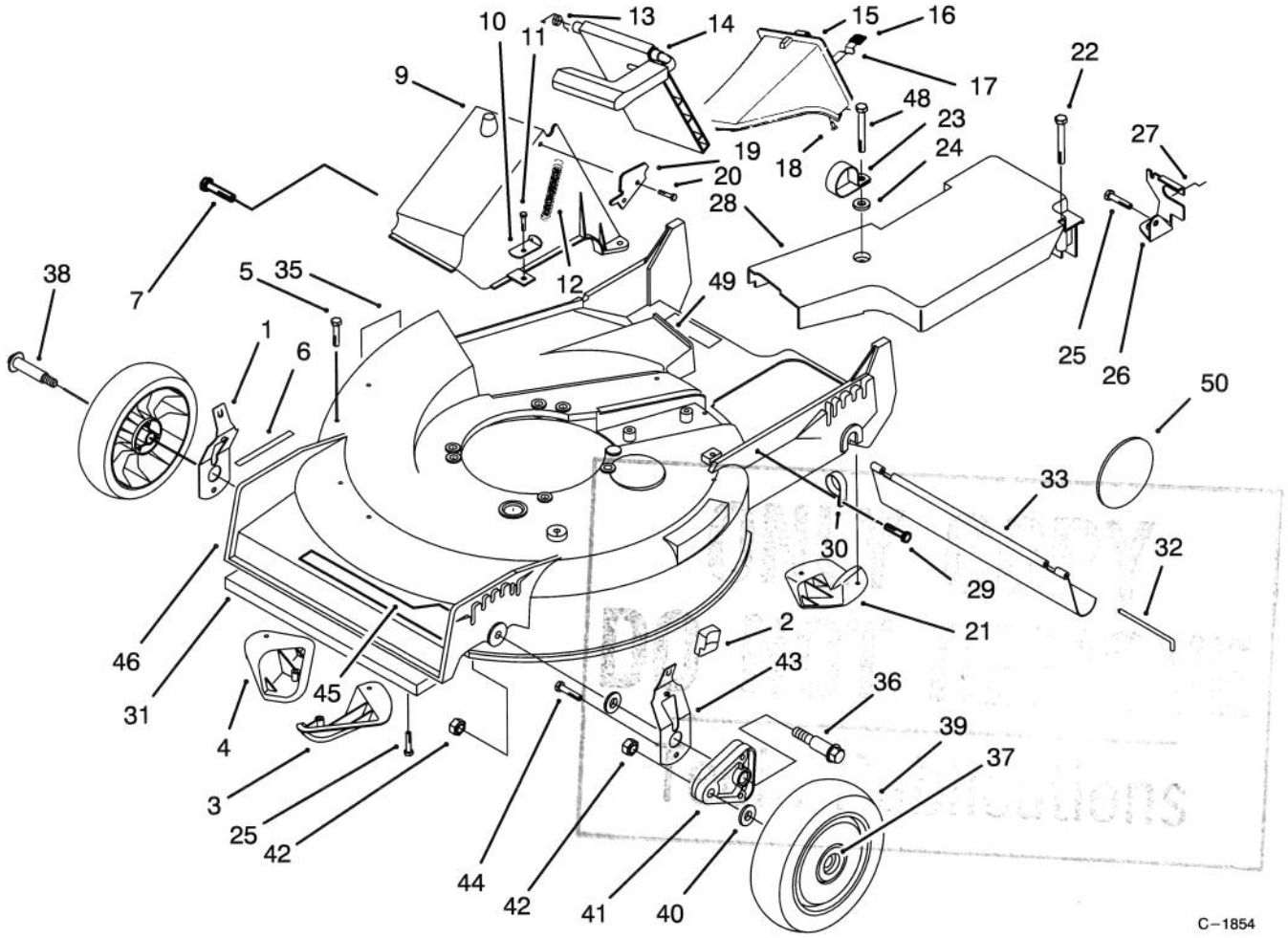

HOUSING ASSEMBLY

Ref. No.	Part No.	Description	No. Used
1	71–0560	Spring Arm Ass'y R.H.	1
2	25–7740	Knob – Arm	2
3	92–1720	Plate – Kicker Right Front	1
4	92–1730	Plate – Kicker Left Front	1
5	32144–111	Screw – Plastite	6
6	92–7856	Decal – H.O.C.	4
7	46–6810	Screw & Washer Assembly	1
9	82–9151	Tunnel – Discharge	1
10	71–9350	Bracket – Spring	1
11	46–6811	Screw & Washer Assembly	3
12	76–4660	Spring – Door	1
13	80–3770	Retainer – Door	1
14	77–0200	Door Assembly	1
15	77–0502	Discharge Plug Assembly (Incl. Ref. #16–18)	1
16	76–4650	Grip – Latch	1
17	76–4640	Latch – Plate	1

Ref. No.	Part No.	Description	No. Used
18	3295–35	Rivet	1
19	76–4570	Plate – Latch	1
20	46–8090	Screw – Tapping	2
21	92–1750	Plate – Kicker Left Rear	1
22	37–7260	Screw – Hex Hd. Tapping	1
23	2412–87	Clamp – Cable	1
24	3–5792	Washer	1
25	32144–70	Screw – Thread Forming Hex Washer Hd.	5
26	82–5680	Bracket – Traction Adj.	1
27	46–7030	Retainer – Cable	1
28	82–9910	Cover – Belt	1
29	32144–112	Screw – Self Tapping	1
30	2412–83	R–Clamp	1
31	46–5400	Shield – Front	1
32	33–3208	Rod – Shield	1

© The TORO Company – 1993
All Rights Reserved

TPS

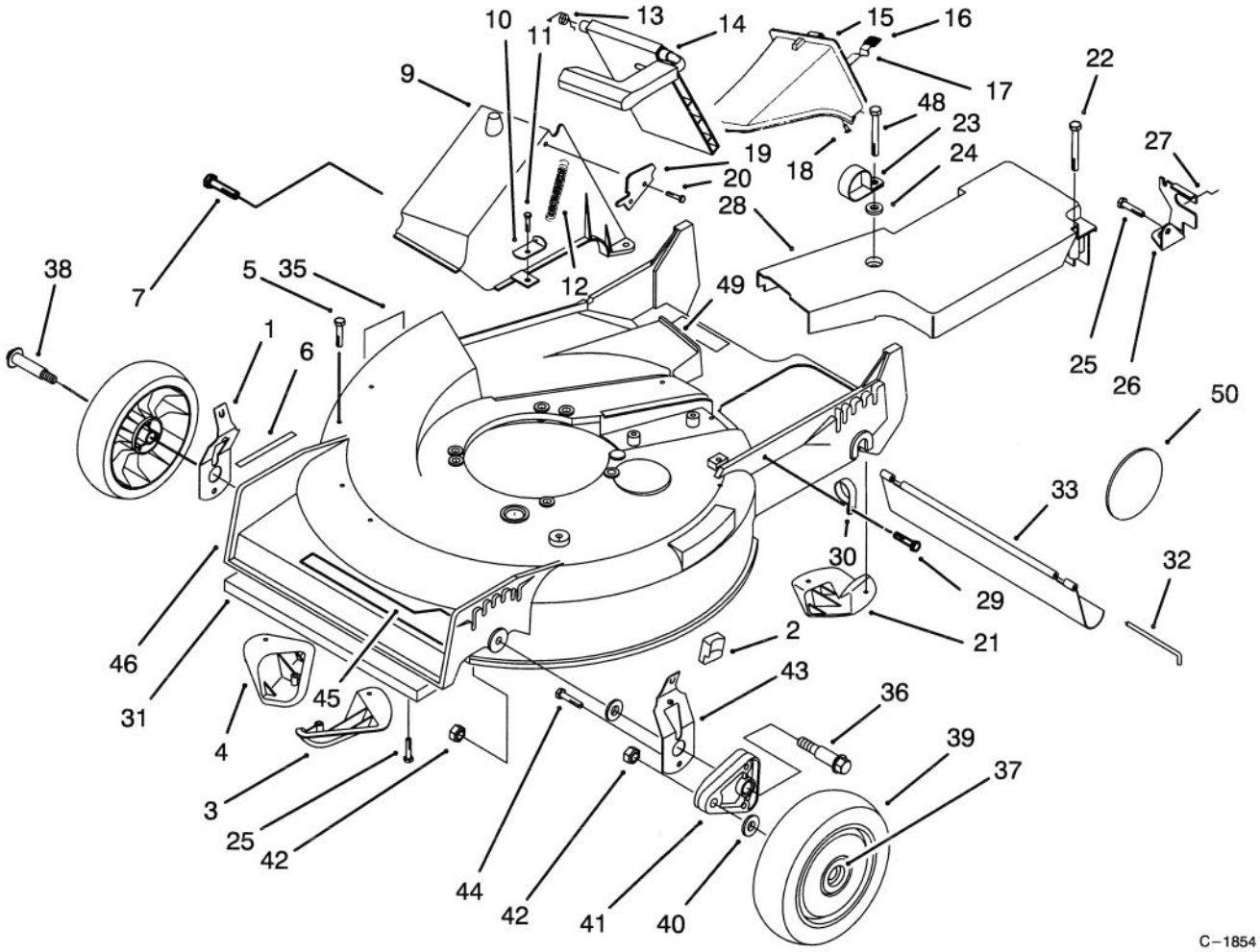

HOUSING ASSEMBLY (CONTINUED)

Ref. No.	Part No.	Description	No. Used
33	44–0580	Shield – Trailing	1
35	92–9077	Decal – DIN	1
36	66–0561	Screw – Shoulder	2
37	27–6250	Bushing – Wheel	4
38	27–6232	Bolt – Wheel	2
39	14–9949	Wheel & Tire Assembly (Incl Ref. #37)	2
40	40–1940	Washer – Wheel Bolt	4
41	66–0580	Arm – Pivot	2
42	3296–6	Nut – Lock	4

Ref. No.	Part No.	Description	No. Used
43	71–0570	Spring Arm Assembly L.H.	1
44	32144–85	Screw – Thread Forming	2
45	92–7858	Decal – Deck	1
46	16–1599	Housing Assembly (Incl. Ref. #3–6, & 21 pg.1) (Incl. Ref. #5 & 6 pg. 3)	1
48	37–7262	Screw – Hex. Hd.	1
49	66–0680	Decal – French Regulation	1
50	92–7663	Cover – Wheel	1

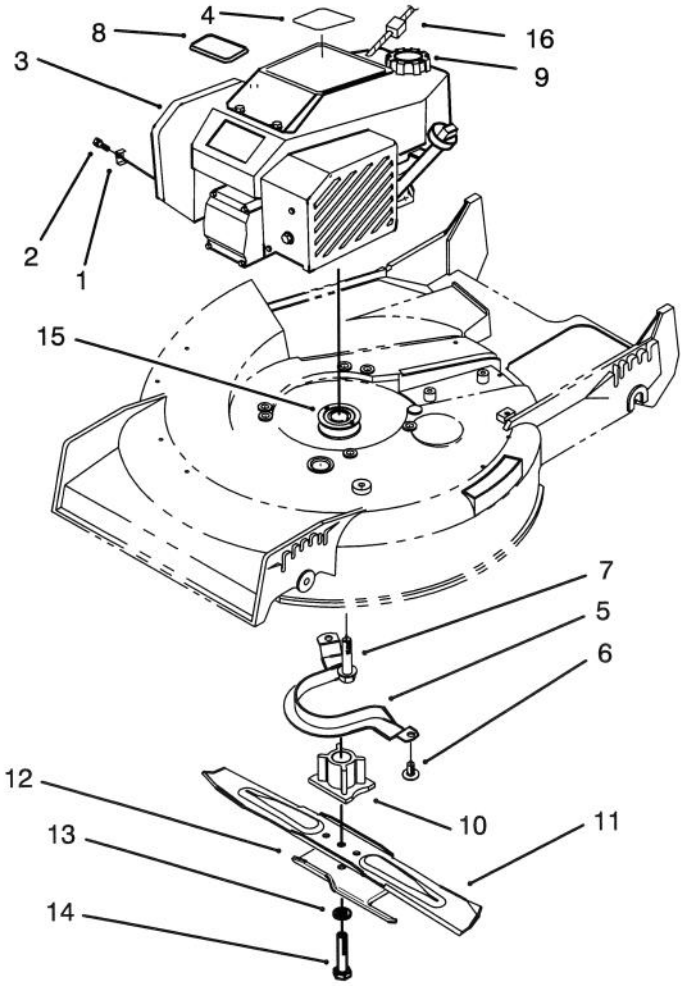

C–1855

ENGINE ASSEMBLY

Ref. No.	Part No.	Description	No. Used
1	2210–249	Clamp – Throttle	1
2	86–7990	Screw – Clamp	1
3	77–8951	Engine (Incl. Ref. #4, 8, & 9)	1
4	92–7857	Decal – Recoil	1
5	66–0570	Guide – Belt	1
6	32144–70	Screw – Hex Washer Hd.	2
7	32144–102	Screw – Thread Forming	3
8	92–2289	Plate – Toro	1

Ref. No.	Part No.	Description	No. Used
9	110352	Gas Cap Assembly	1
10	62–7540	Retainer – Blade	1
11	14–9419	Blade – 21"	1
12	92–1599	Stiffener – Accelerator	1
13	3253–22	Washer – Lock	1
14	26–0670	Screw – Blade	1
15	62–7550	Pulley – Driver	1
16	2210–316	Stop – Rope	1

3316–624

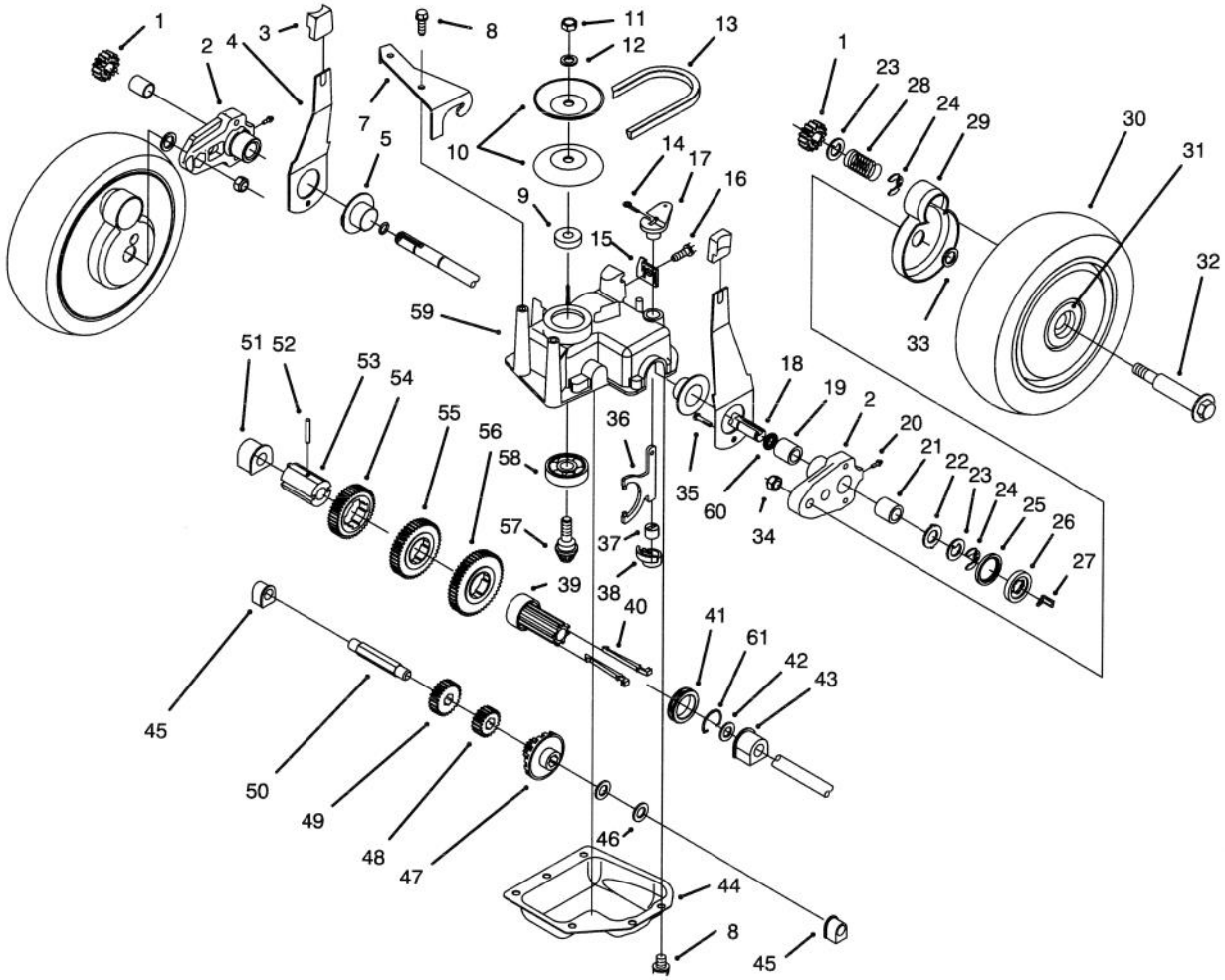

GEAR CASE ASSEMBLY

Ref. No.	Part No.	Description	No. Used
1	65–4750	Pinion	2
2	63–8701	Pivot Arm Assembly (Incl. Ref # 19, 20, & 21)	2
3	25–7740	Knob – Arm	2
4	63–8720	Spring Arm Assembly	2
5	42–3520	End Cap	2
7	62–4320	Bracket – Belt Guide	1
8	49–2040	Screw – Self Tapping	8
9	62–6660	Spacer	1
10	60–8840	Pulley – Half	2
11	3296–5	Locknut	1
12	3256–24	Washer – Flat	1
13	62–3900	V–Belt	1
14	3272–10	Pin – Cotter	1
15	82–8780	Cable – Retainer	1
16	32144–70	Screw – Thread Forming	1
17	60–8821	Lever – Shift	1
18	65–4770	Shaft – Output	1
19	70–9760	Bushing	2
20	302–56	Fitting – Grease	2
21	48–2060	Needle Bearing	2
22	65–4730	Thrust Washer	2
23	65–4740	Thrust Washer	4
24	65–2720	Ring – Retaining	4
25	65–4710	Ring – Friction	2

Ref. No.	Part No.	Description	No. Used
26	65–4760	Washer – Clutch	2
27	66–6050	Key – Rocker L.H.	1
*	66–6040	Key – Rocker R.H.	1
28	65–4720	Spring	2
29	74–1660	Cover – Wheel	2
30	14–9959	Wheel – Tire & Gear Ass'y (Incl. Ref. # 31)	2
31	27–6250	Bushing – Wheel	4
32	27–6232	Wheel Bolt	2
33	74–1670	Spacer – Wheel Cover	2
34	3296–6	Locknut	2
35	32144–85	Screw	2
36	60–8870	Yoke – Shift	1
37	29–9570	Bushing – Yoke	1
38	60–8810	Retainer – Shift Fork	1
39	76–0780	Sleeve – Shift Key	1
40	76–0760	Key – Shift	2
41	76–0770	Collar – Shift	1
42	36–4780	Washer – Thrust	1
43	60–8770	Bushing – Output Shaft	1
44	60–8730	Cover – Gear Case	1
45	60–8750	Bushing – Int. Shaft	2
46	36–4791	Washer – Thrust	2
47	55–3760	Gear – Pinion 15 Tooth	1
48	55–3780	Gear – Pinion 20 Tooth	1

*Not Illustrated

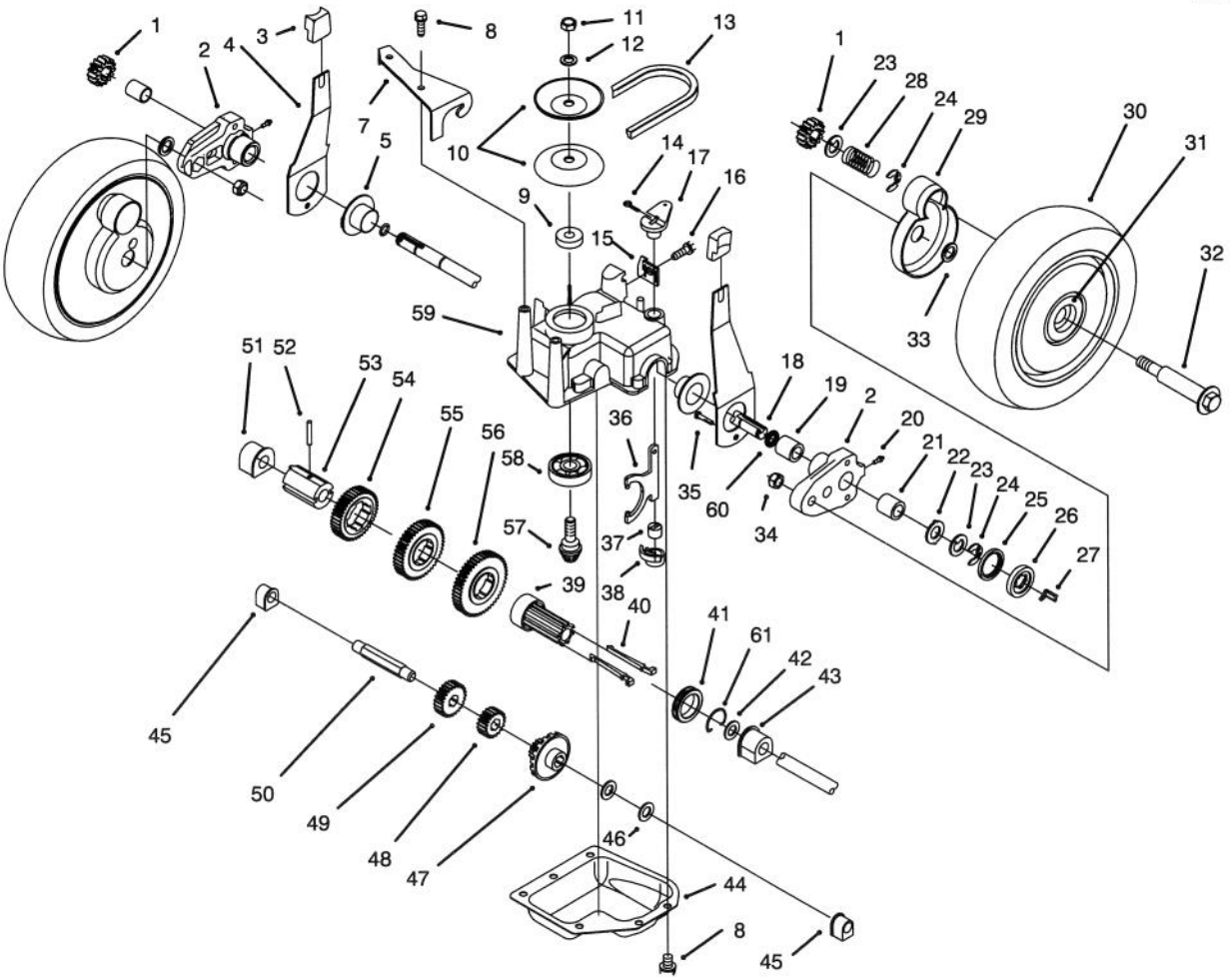

C–1333

GEAR CASE ASSEMBLY (CONTINUED)

Ref. No.	Part No.	Description	No. Used
49	55–3800	Gear – Pinion	1
50	60–8800	Shaft – Intermediate	1
51	60–8850	Bushing – Output Shaft	1
52	32121–120	Pin – Coil	1
53	60–8790	Sleeve – Gear	1
54	55–3810	Gear – 39 Tooth 3rd Gear	1
55	55–3790	Gear – 44 Tooth 2nd Gear	1

Ref. No.	Part No.	Description	No. Used
56	55–3770	Gear – 49 Tooth 1st Gear	1
57	60–8890	Pinion – Bevel	1
58	38–7820	Bearing – Ball	1
59	60–8710	Gear Case – Upper	1
60	237–153	O–Ring	2
61	65–5250	Clip – Spring	1
*	62–6673	Gear Case Assembly	1

*Not Illustrated

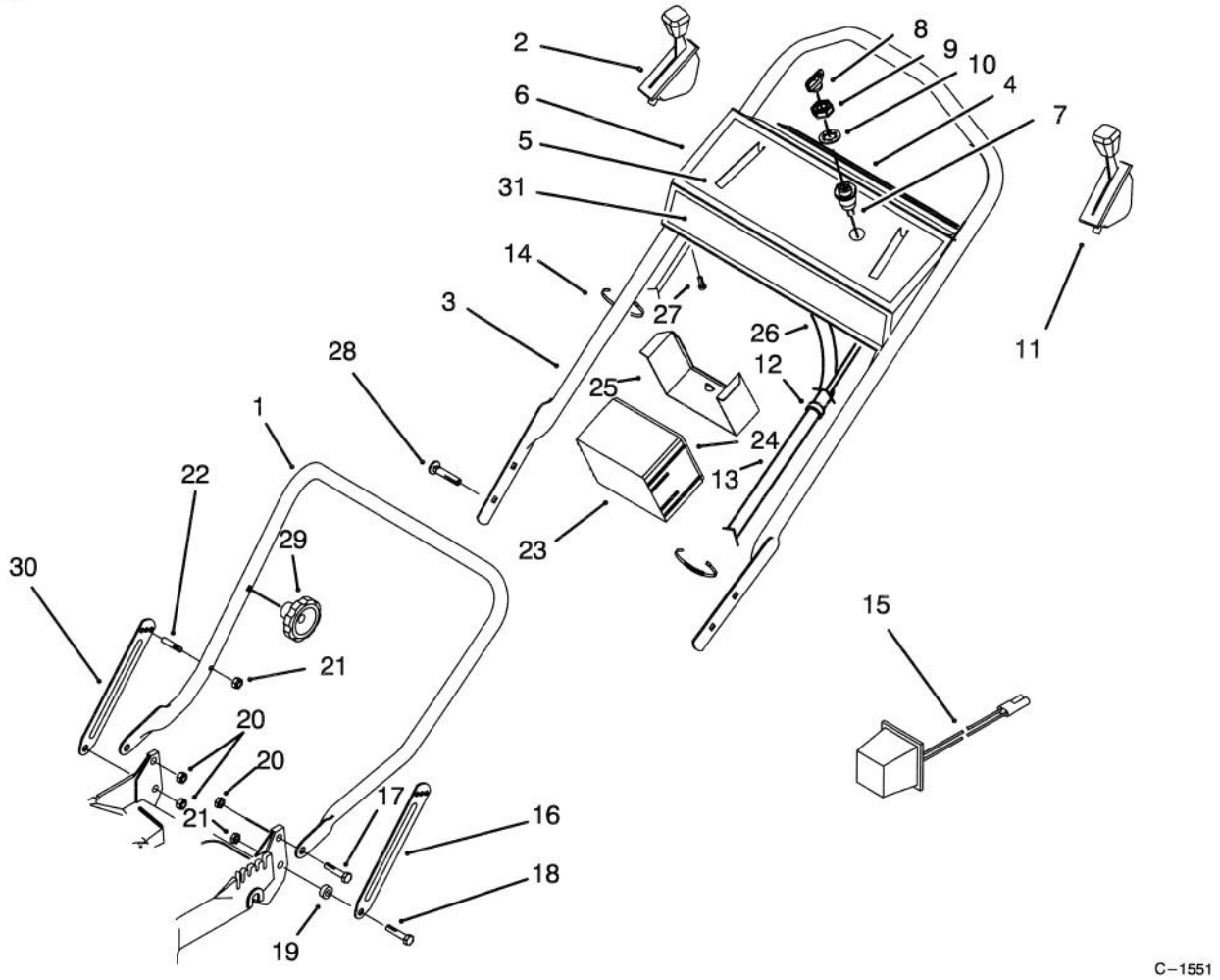

C–1551

HANDLE ASSEMBLY

Ref. No.	Part No.	Description	No. Used
1	82–5530	Handle – Lower	1
2	76–2712	Control – Ground Speed	1
3	84–8330	Handle – Upper	1
4	66–1790	Decal – Danger	1
5	66–0280	Decal – Instructions	1
6	13–5859	Panel – Control (Incl. Ref. #4 & 5)	1
7	46–5780	Switch – Starter	1
8	63–8360	Key – Ignition	1
9	218–461	Nut – Hex	1
10	3254–5	Washer – Lock	1
11	66–0236	Control – Throttle (Bend Type #3) (Sheath Lg. 62 3/4") (Wire Lg. 2 3/8")	1
12	2412–50	Clip – Convoluted Tubing	3
13	46–6440	Cover – Control Cables	1
14	3290–378	Tie – Cable	5

Ref. No.	Part No.	Description	No. Used
15	22–4710	Charger – Battery	1
16	84–8360	Latch – Handle L.H.	1
17	27–7211	Screw – Shoulder	2
18	27–7210	Screw – Shoulder	2
19	3–3287	Spacer – Handle Latch	2
20	3296–29	Nut – Lock	3
21	3296–47	Nut – Lock	3
†22	49–2750	Pin – Handle	2
23	55–7520	Battery Assembly	1
24	92–8659	Decal – Charging Instructions	1
25	55–8180	Retainer – Battery	1
26	80–4790	Harness – Wire	1
27	32144–115	Screw – Self Tap Slotted	5
28	17–9421	Screw – Handle	2
29	19–4050	Knob – Handle Release	2
30	84–8400	Latch – Handle R.H.	1
31	92–7862	Decal – Toro	1

†Service Replacement Part

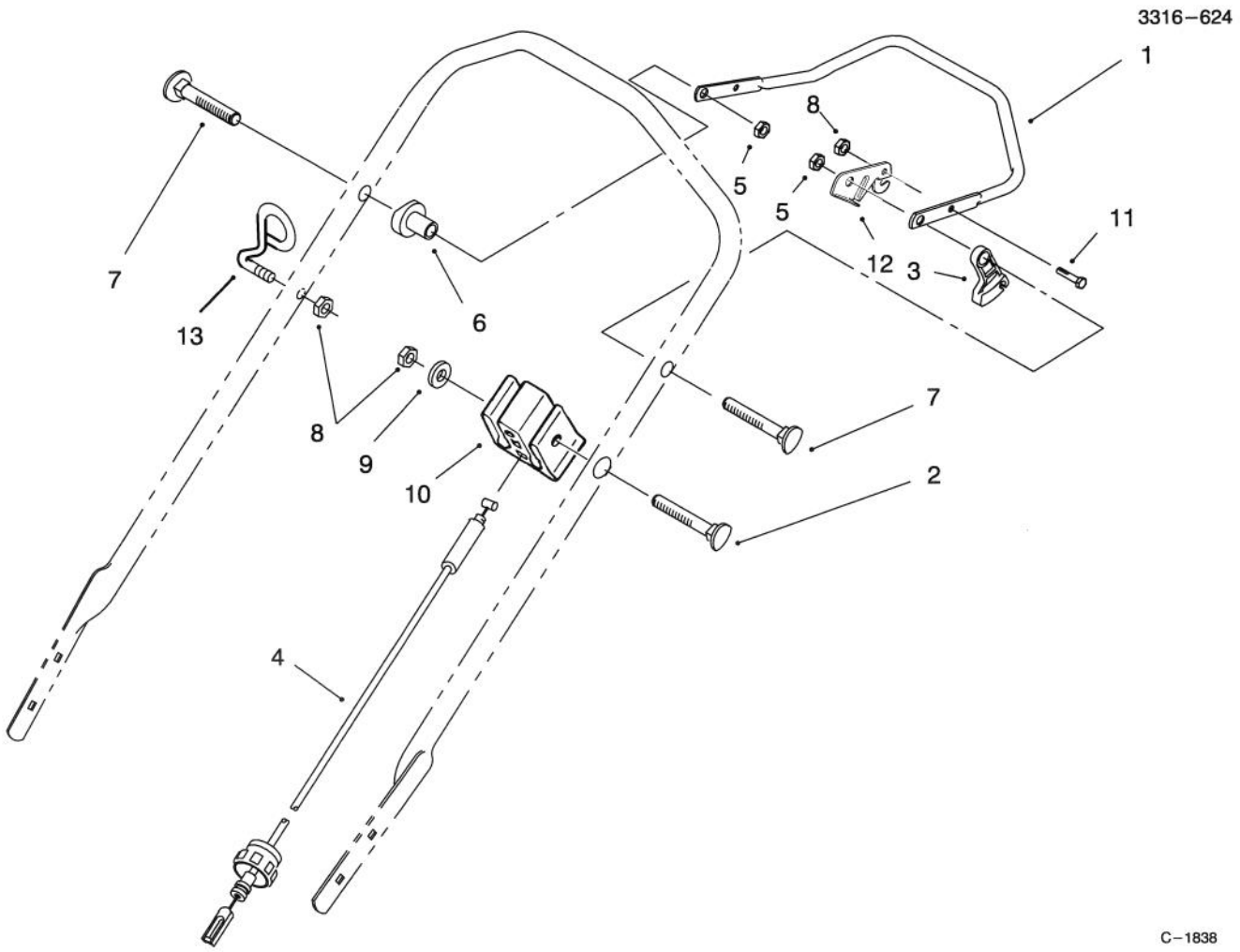

TRACTION CONTROL ASSEMBLY

Ref. No.	Part No.	Description	No. Used
1	52–7430	Control Bar Assembly	1
2	46–6434	Screw – Handle	1
3	46–5520	Lever – Traction	1
4	46–5481	Cable – Traction	1
5	3296–58	Locknut	2
6	49–1630	Support – Spacer	2
7	17–9421	Screw – Handle	2

Ref. No.	Part No.	Description	No. Used
8	3296–42	Nut – Lock	3
9	3256–22	Washer – Flat	1
10	46–6980	Support – Cable	1
11	321–3	Screw – Hex Hd. Cap	1
12	66–5350	Lever – Control	1
13	86–9670	Guide – Rope	1

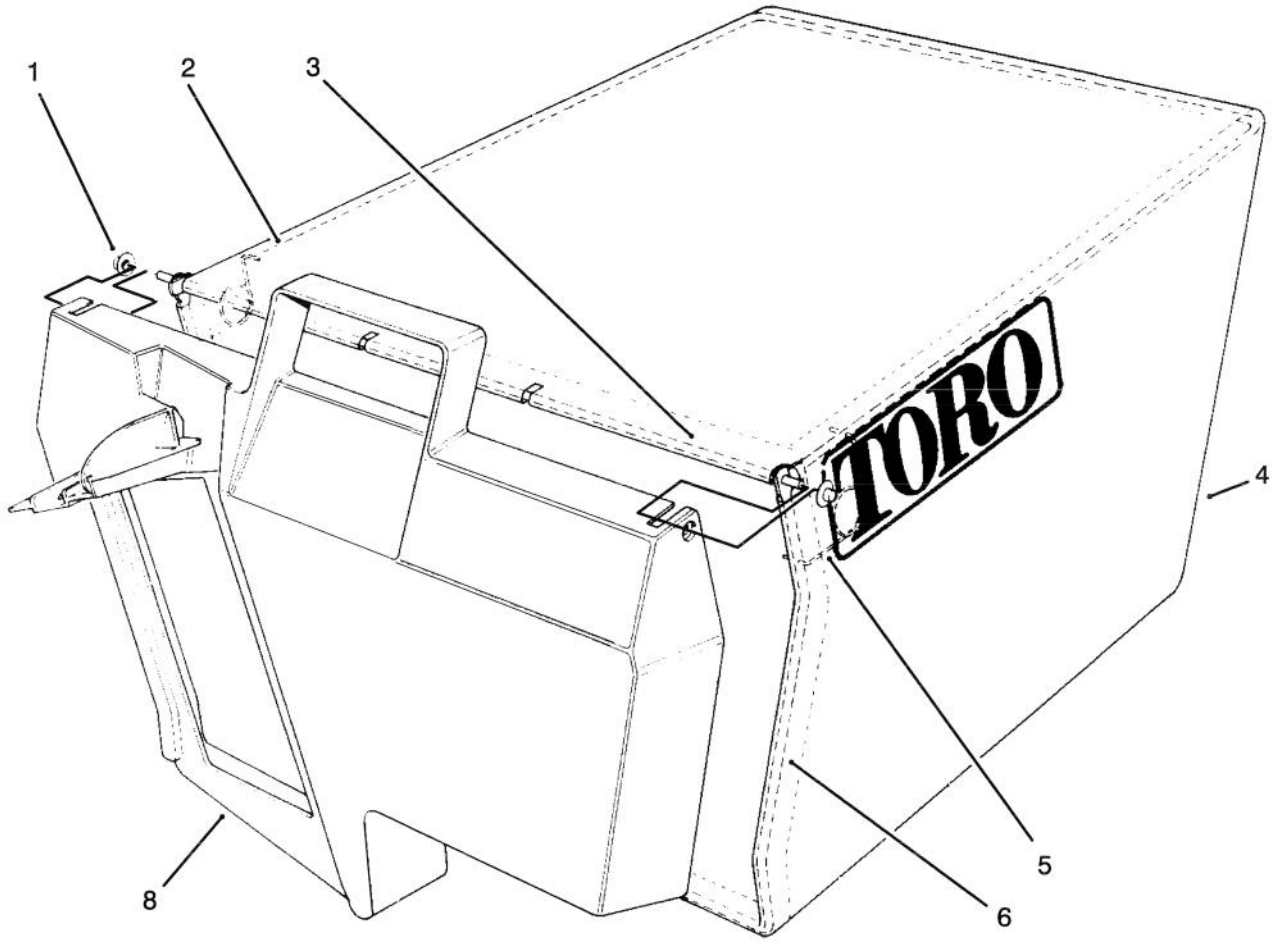

C–1839

GRASS BAG ASSEMBLY NO. 11–0189

Ref. No.	Part No.	Description	No. Used
1	3290–422	Nut – Push	2
2	42–4030	Bag Frame – Upper	1
3	33–4820	Hinge – Bag Door	1
4	8–2759	Bag – Grass	1

Ref. No.	Part No.	Description	No. Used
5	36–6910	Spring	2
6	42–4020	Frame – Bag	1
8	37–1393	Door – Grass Bag	1

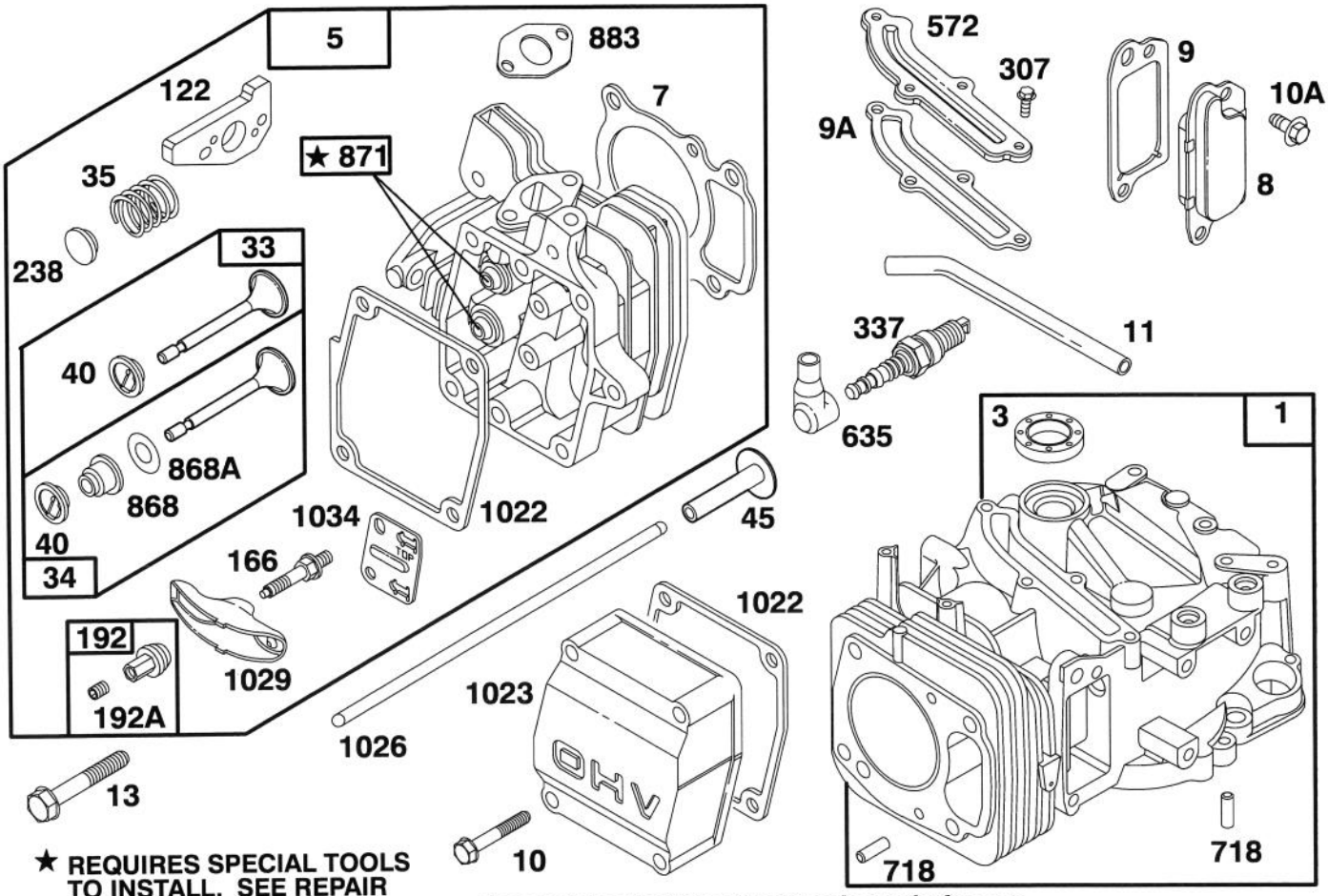

★ REQUIRES SPECIAL TOOLS TO INSTALL. SEE REPAIR INSTRUCTION MANUAL.

Assemblies include all parts shown in frames.

ENGINE GTS 150

Ref. No.	Part No.	Description	No. Used
1	77–7590	Cylinder Assy	1
*3	77–9060	Seal – Oil	1
5	77–7730	Head – Cylinder	1
*7	77–7740	Gasket – Cylinder Head	1
8	77–9300	Breather Assy	1
*9	77–9250	Gasket – Breather	1
*9A	77–7410	Gasket – Breather	1
10	77–7360	Screw – Hex Head (valve cover)	4
10A	77–9200	Screw – Hex Head	2
11	77–7350	Tube – Breather	1
13	77–7630	Screw – Cylinder Head	4
33	77–7860	Valve – Exhaust	1
34	77–7880	Valve – Intake	1
35	77–7810	Spring – Valve	2
40	77–7870	Retainer – Spring	2
45	77–7610	Tappet – Valve	2
†122	77–7820	Adapter Assy	1
166	77–7780	Stud – Rocker Arm	2
192	77–9310	Ball & Screw – Rocker Arm	2
192A	77–9090	Screw – Set	1
238	77–7800	Cap – Valve	2
307	77–7420	Screw – Cover Mtg (breather cover)	4

Ref. No.	Part No.	Description	No. Used
337	77–7330	Plug – Spark	1
572	77–7400	Cover – Breather	1
635	77–7340	Elbow – Spark Plug	1
718	77–7600	Pin – Cylinder	2
*868	77–7890	Seal Assy – Valve	1
*868A	77–7900	Gasket – Valve	1
871	77–7850	Bushing – Guide	1
*883	77–7760	Gasket – Exhaust	1
*1022	77–7320	Gasket – Rocker Cover	1
1023	77–9320	Cover – Valve	1
1026	77–7620	Rod – Push	2
1029	77–7790	Arm – Rocker	2
1034	77–7770	Guide – Push Rod	1
	77–9020	Short Block (Incl. Ref. # 1, 7, 9, 9A, 45, 122, 883, & 1022 pg. 9) (Incl. Ref. # 16, 18, 25, 28, 29, 46, 219, 230, 615, 616 979, & 1024 pg. 10) (Incl. Ref. #163 pg. 12)	1

* Included in Gasket Set–Part No. 77–8900
†Included in Carburetor Overhaul Kit–Part No. 77–8920

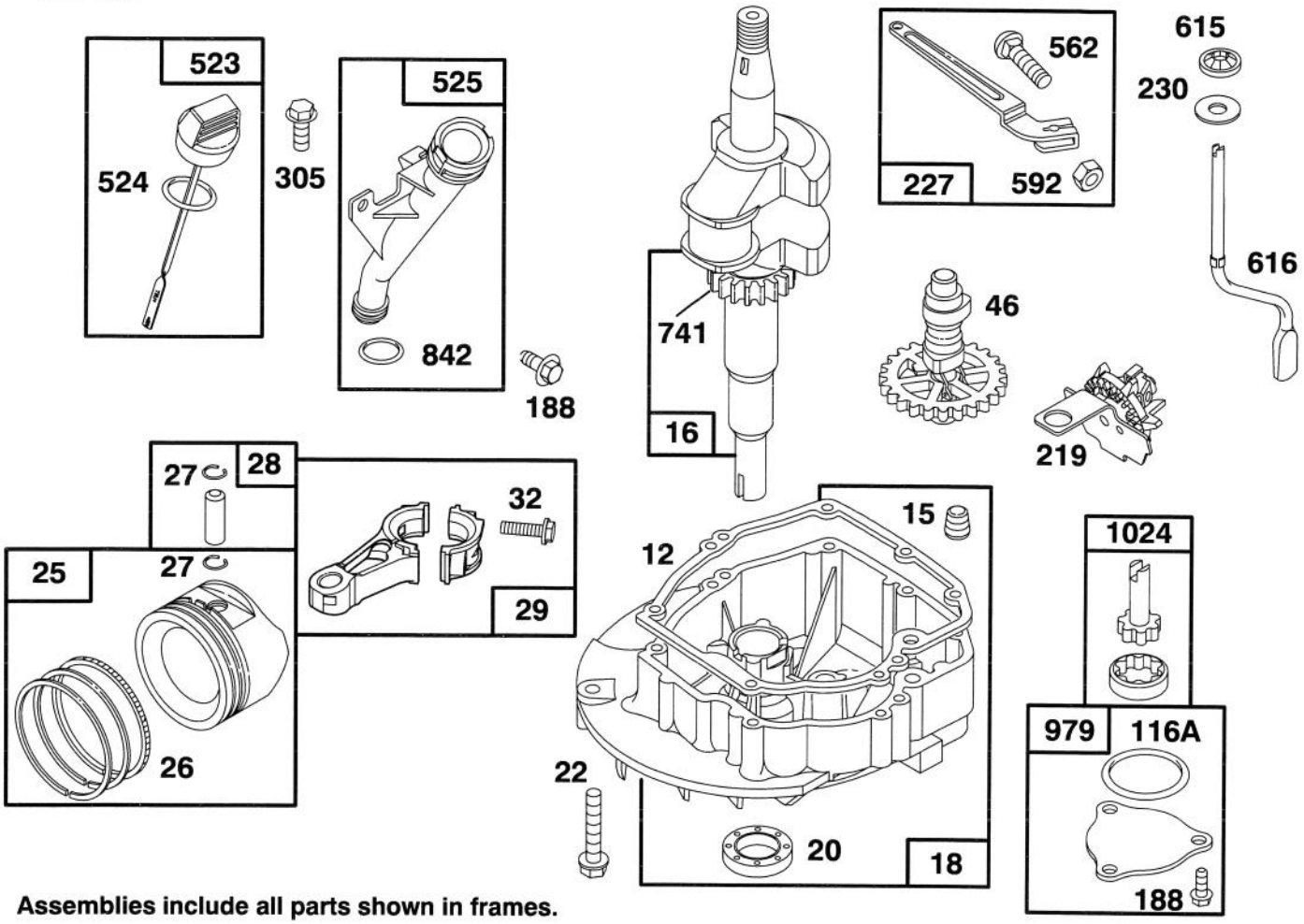

Assemblies include all parts shown in frames.

ENGINE GTS 150

Ref. No.	Part No.	Description	No. Used
*12	77–7550	Gasket – Engine Base	1
15	77–9240	Plug – Pipe	1
16	77–9330	Crankshaft Note: Order Part No. 77–7540 For Timing Gear Key	1
18	77–7560	Base – Engine	1
*20	77–7570	Seal – Oil	1
22	77–9070	Screw– Engine Base	7
25	77–7690	Piston Assy (Std)	1
26	77–7700	Ring Set (Std)	1
27	77–7710	Lock – Piston Pin	2
28	77–9340	Pin Assy – Piston	1
29	77–7670	Rod – Connecting	1
32	77–9350	Screw – Connecting Rod	2
46	77–7490	Gear – Cam	1
*116A	77–7660	O–Ring	1

Ref. No.	Part No.	Description	No. Used
188	77–9360	Screw – Hex Head	5
219	77–7500	Gear – Governor	1
227	77–7370	Lever Assy – Governor	1
230	77–7470	Washer	1
305	77–8310	Screw – Hex Head	2
523	77–7260	Dipstick – Oil	1
*524	77–7270	Seal – O Ring	1
525	77–7290	Tube – Oil Filler	1
562	77–7380	Bolt – Governor Lever	1
592	77–7390	Nut – Hex	1
615	77–7480	Pushnut	1
616	77–7460	Crank – Governor	1
741	77–7530	Gear – Timing	1
*842	77–7300	Seal – O Ring	1
979	77–7650	Cover – Oil Pump	1
1024	77–7640	Pump – Oil	1

* Included in Gasket Set–Part No. 77–8900

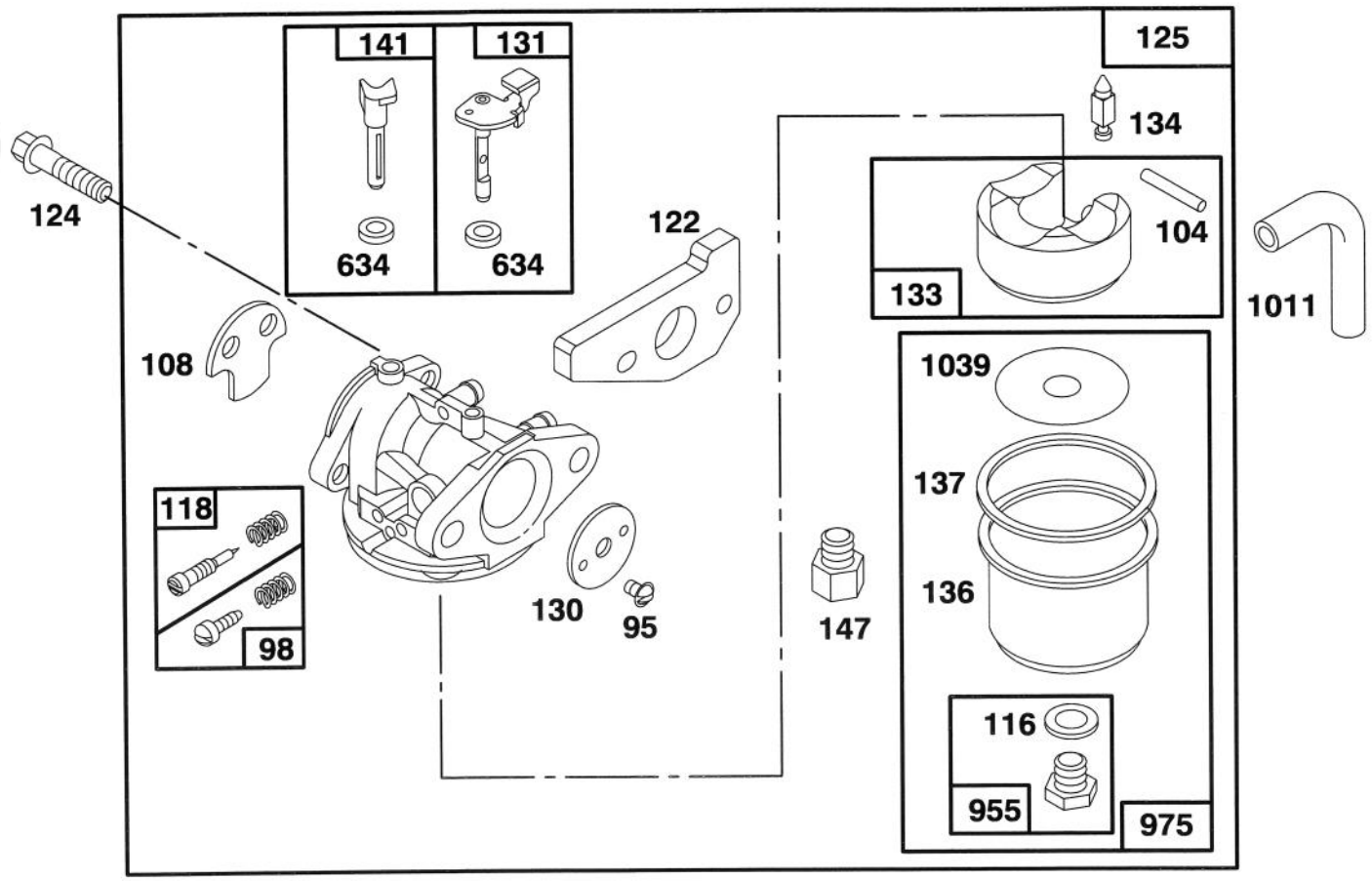

Assemblies include all parts shown in frames.

ENGINE GTS 150

Ref. No.	Part No.	Description	No. Used
95	77–8090	Screw – Valve Mtg	1
98	77–8240	Screw – Idle Adj	1
†104	77–8180	Pin – Float Hinge	1
108	77–8070	Valve – Choke	1
††116	77–8210	Sealing – Gasket	1
†118	77–8230	Valve & Spring – Needle	
†122	77–7820	Adapter Assy	1
124	77–7970	Screw – Hex Head (carb mtg)	2
125	77–8050	Carburetor Assy	1
130	77–8080	Valve – Throttle	1
131	77–8160	Shaft – Throttle	1
133	77–8170	Float – Carburetor	1
†134	77–8110	Valve – Inlet (Includes Seat)	1

Ref. No.	Part No.	Description	No. Used
136	77–7240	Bowl – Fuel	1
††137	77–8200	Gasket – Float Bowl	1
141	77–8130	Shaft – Choke	1
147	77–8120	Adapter – Jet Note: For High Altitude Jet, Order Part No. 77–9000	1
‡634	77–8150	Washer – Seal	2
955	77–8220	Screw – Hex Head	1
975	77–8190	Bowl Assy – Carburetor	1
1011	77–8040	Tube – Vent	1
†1039	77–7250	Limiter – Float	1

† Included in Carburetor Overhaul Kit–Part No. 77–8920
‡ Included in Carburetor Gasket Kit–Part No. 77–8930

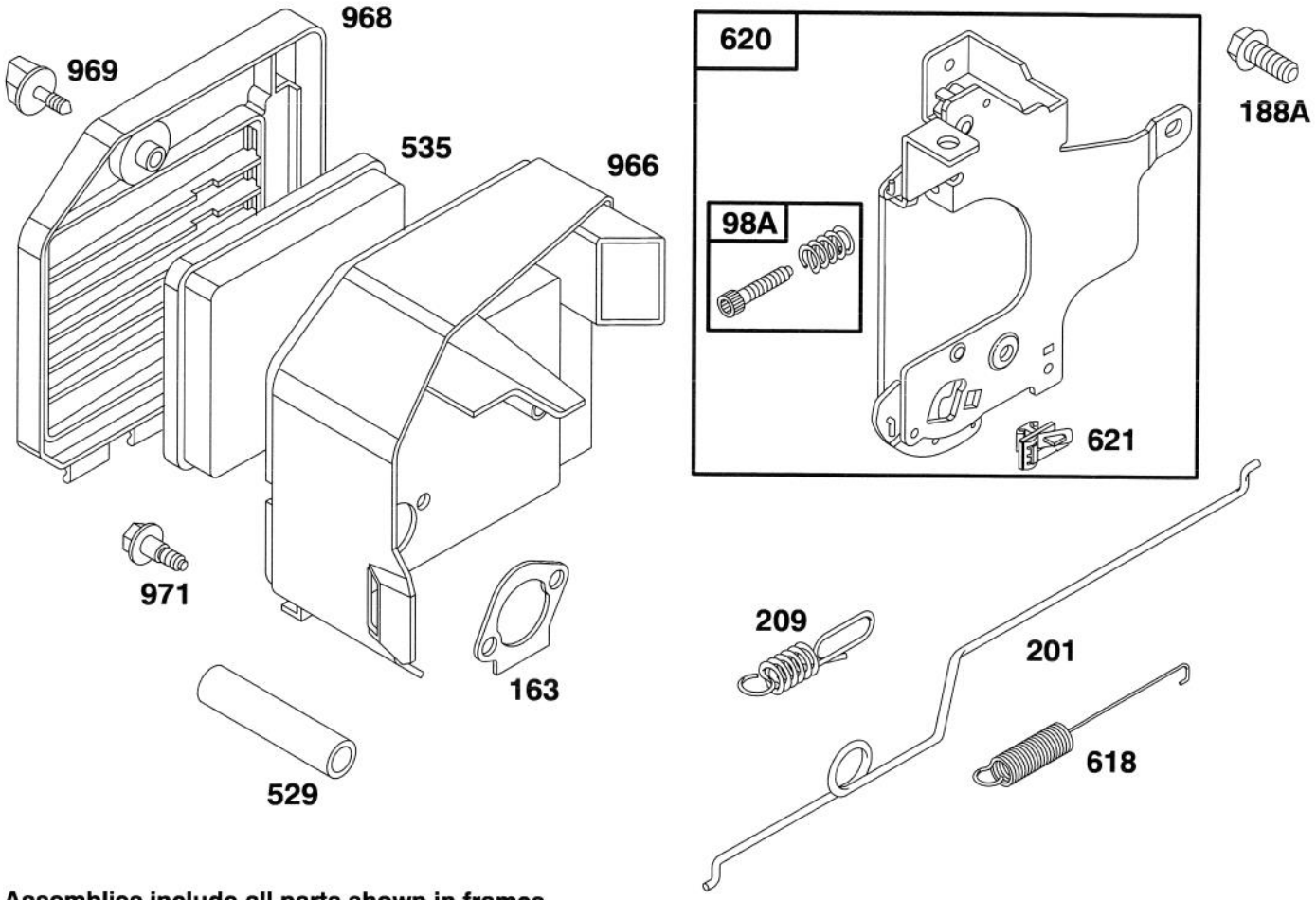

Assemblies include all parts shown in frames.

ENGINE GTS 150

Ref. No.	Part No.	Description	No. Used
98A	77–8020	Screw Assy – Speed Adj	1
*163	77–7960	Gasket – Air Cleaner	1
188A	77–9360	Screw – Hex Head	2
201	77–7980	Link – Governor	1
209	77–7990	Spring – Governor	1
529	77–8030	Tube – Breather	1
535	77–7950	Element – Filter	1
618	77–8140	Spring – Choke	1

Ref. No.	Part No.	Description	No. Used
620	77–8000	Bracket – Carburetor	1
621	77–8010	Switch – Stop	1
966	77–7940	Base Air Cleaner	1
968	77–7040	Cover – Air Cleaner	1
969	77–7920	Screw – Air Cleaner	1
971	77–7930	Screw – Air Cleaner	3

* Included in Gasket Set–Part No. 77–8900

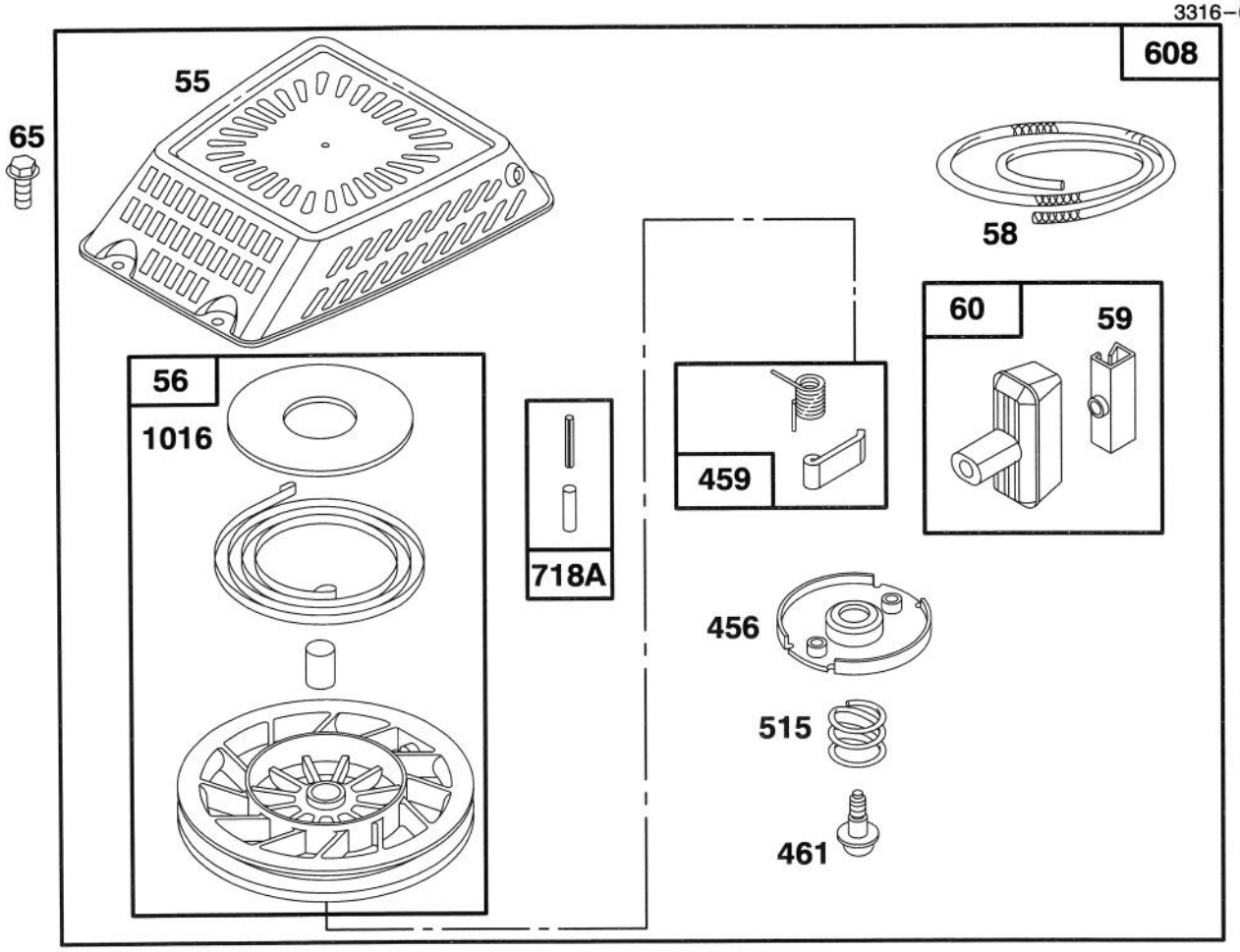

Assemblies include all parts shown in frames.

ENGINE GTS 150

Ref. No.	Part No.	Description	No. Used
55	77–8890	Housing – Rewind Starter	1
56	77–9270	Pulley – Rewind Starter	1
58	77–9370	Rope – Starter (Cut To Suit)	1
59	77–9380	Insert – Rewind Handle	1
60	77–9390	Handle – Rewind Starter	1
65	77–8300	Screw – Hex Head	4

Ref. No.	Part No.	Description	No. Used
456	77–8470	Retainer – Rewind Starter	1
459	77–8530	Pawl – Starter	2
461	77–8490	Screw – Rewind Starter	1
515	77–8500	Spring – Torsion	1
608	77–9400	Starter Assy – Rewind	1
718A	77–8550	Pin – Spring	1
1016	77–8570	Cover – Spring	1

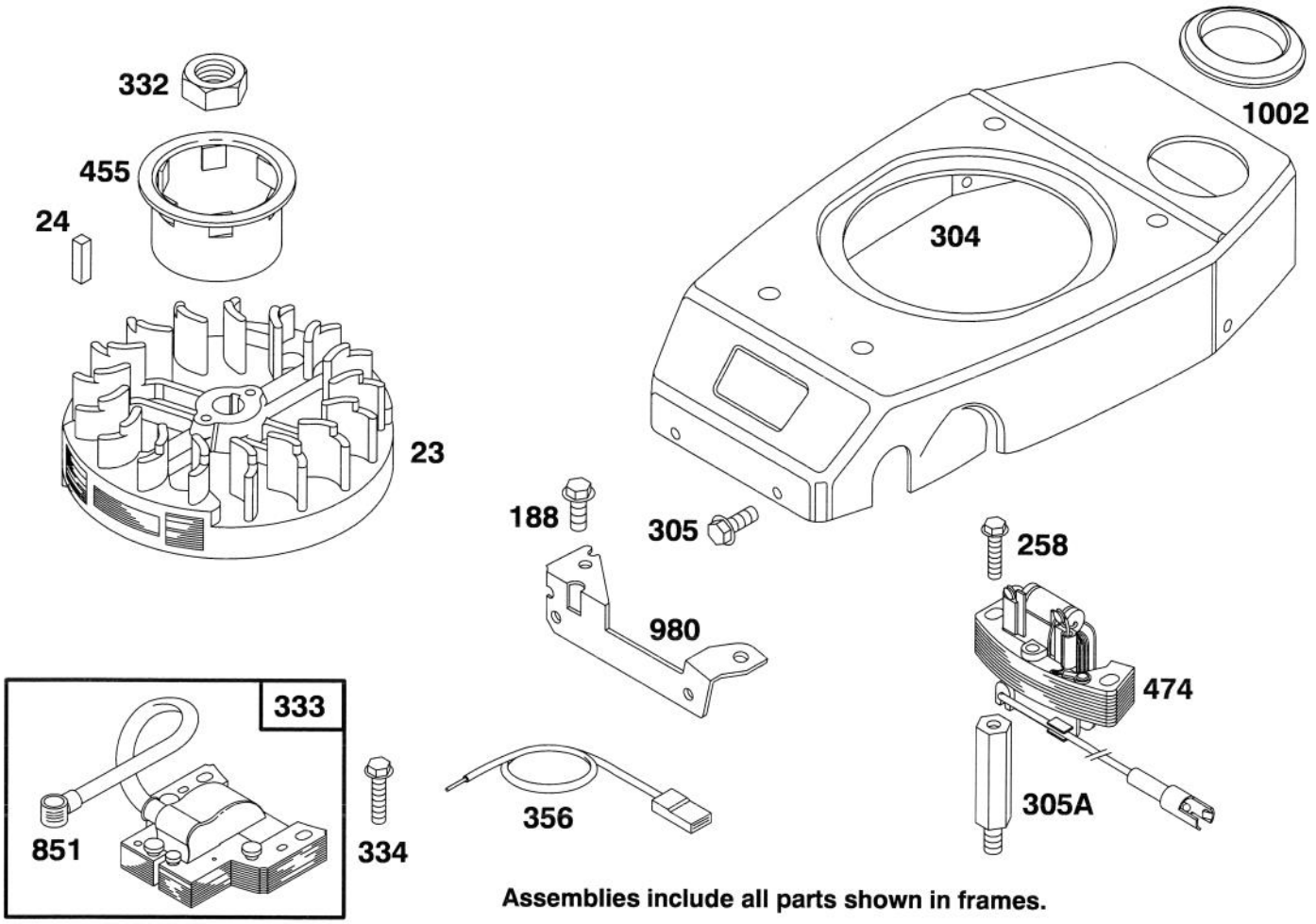

Assemblies include all parts shown in frames.

ENGINE GTS 150

Ref. No.	Part No.	Description	No. Used
23	77–8330	Flywheel – Magneto	1
24	77–8340	Key – Flywheel	1
188	77–9360	Screw – Hex Head	2
258	77–8870	Screw – Hex Head	2
304	77–8270	Housing – Blower	1
305	77–8310	Screw – Hex Head (blower hsg.)	4
305A	77–8390	Stud – Stator Mounting	1
332	77–8360	Nut – Flywheel	1

Ref. No.	Part No.	Description	No. Used
333	77–8420	Armature – Magneto	1
334	77–9420	Screw – Armature Mtg.	2
356	77–8400	Wire – Ground	1
455	77–8350	Cup – Starter	1
474	77–8370	Stator Assembly	1
851	77–8430	Terminal – Spark Plug	1
980	77–7140	Bracket – Blower Housing	1
1002	77–7180	Grommet	1

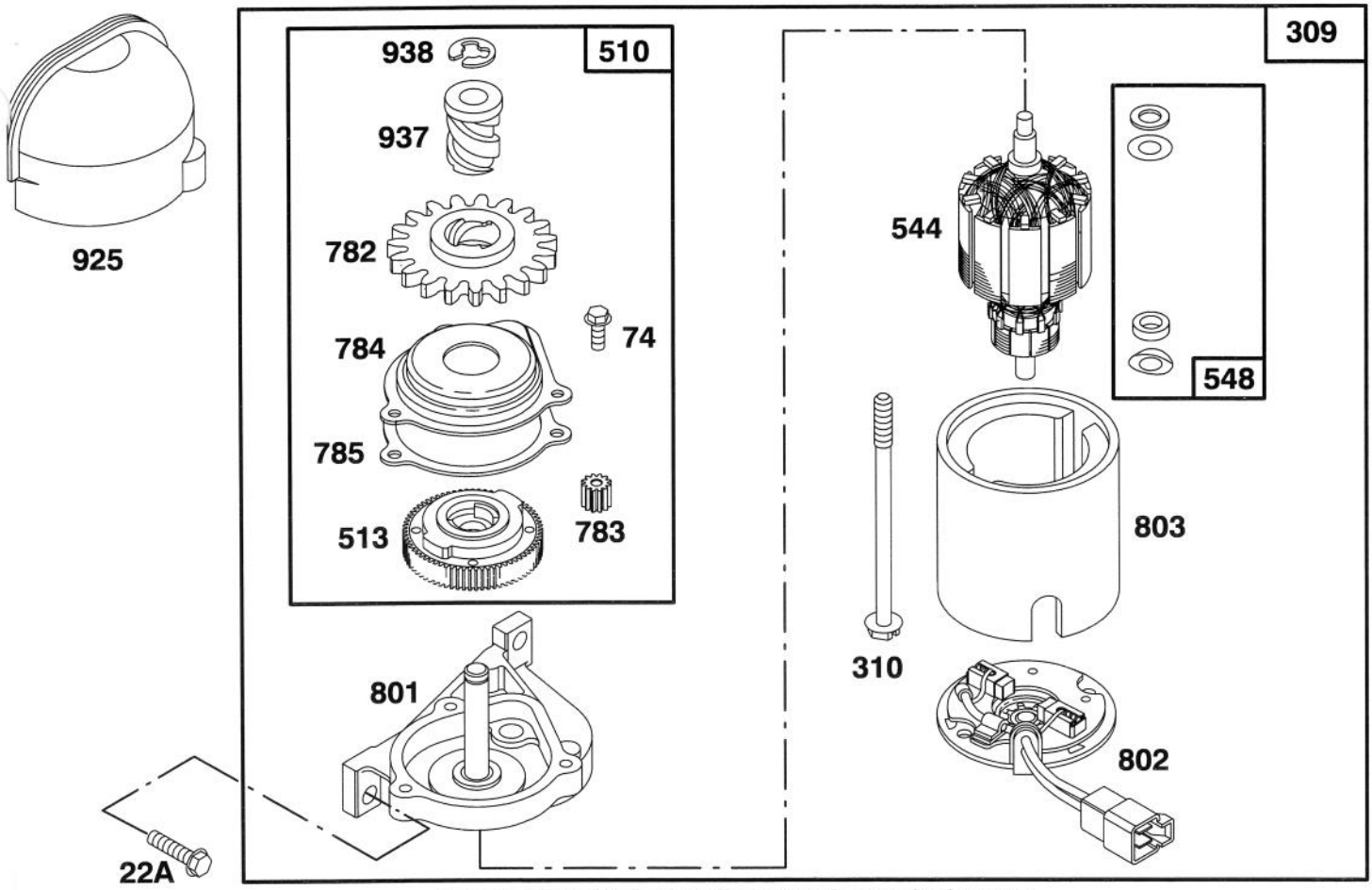

Assemblies include all parts shown in frames.

T–0323

ENGINE GTS 150

Ref. No.	Part No.	Description	No. Used
22A	77–8720	Screw – Hex Washer Hd.	1
74	77–8800	Screw – Hex Washer Hd.	1
309	77–8670	Motor – Starter	1
310	77–8710	Screw – Hex Washer Hd.	1
510	77–8910	Drive Kit	1
513	77–8770	Clutch Assembly	1
544	77–8690	Armature Assembly	1
548	77–8740	Washer Set	1
782	77–8810	Pinion – Starter	1

Ref. No.	Part No.	Description	No. Used
784	77–8780	Cover – Gear	1
785	77–8790	Gasket – Cover	1
801	77–8680	Bracket Assembly	1
802	77–8690	Head Assembly	1
803	77–8700	Shell and Magnet Ass'y	1
925	77–7200	Cover – Starter	1
937	77–8820	Spline – Starter	1
938	77–8830	Retainer – Lock	1

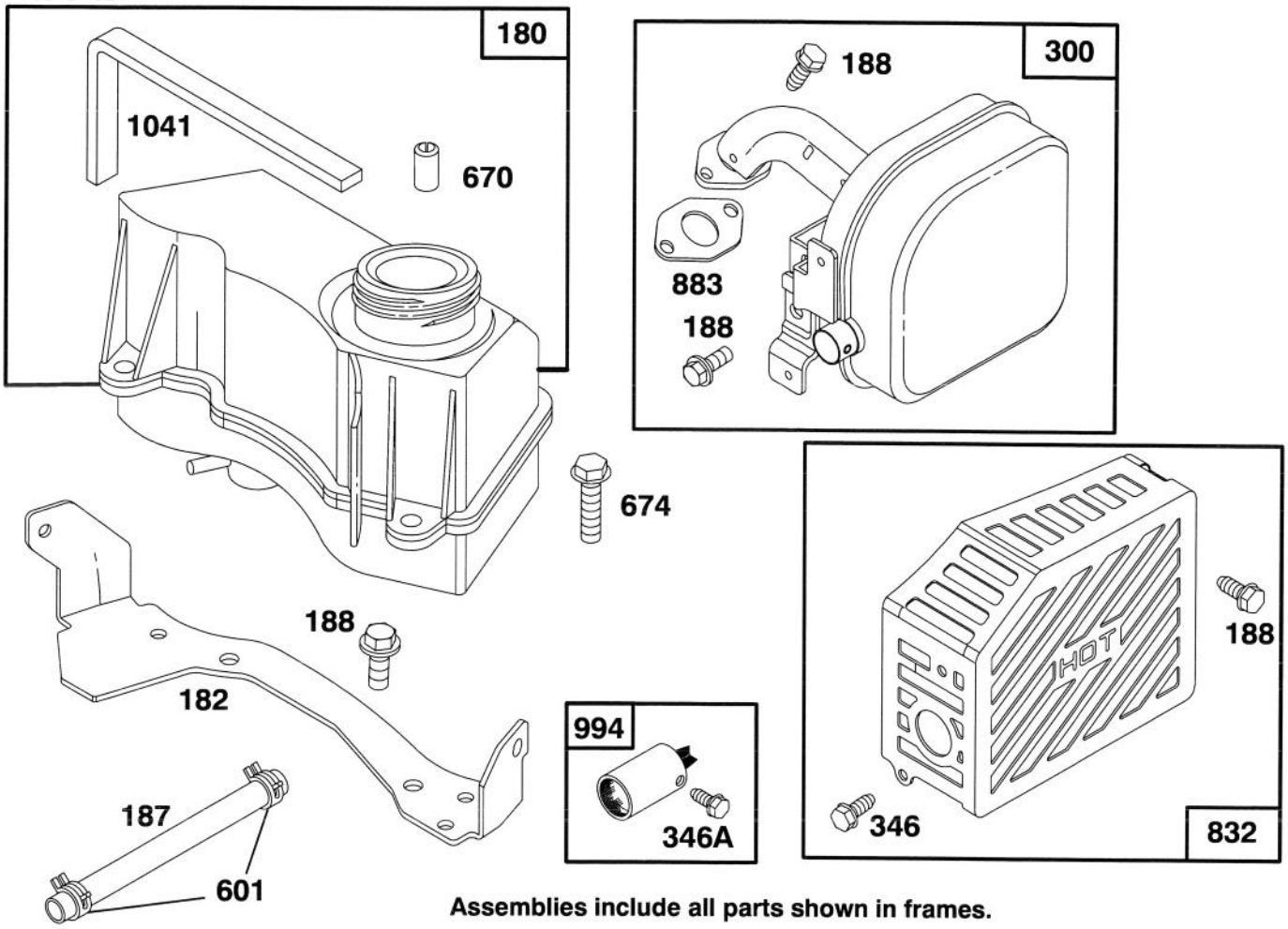

Assemblies include all parts shown in frames.

ENGINE GTS 150

Ref. No.	Part No.	Description	No. Used
180	77–8580	Tank Assy – Fuel	1
182	77–7170	Bracket – Fuel Tank	1
187	77–8620	Hose – Fuel (Cut To Suit)	1
188	77–7450	Screw – Hex Head	7
300	77–8640	Muffler – Exhaust	1
346		Screw – Hex	2
346A	77–9050	Screw – Arrester Mtg.	1
601	77–8630	Clamp – Fuel Hose	2

Ref. No.	Part No.	Description	No. Used
670	77–9030	Spacer – Fuel Tank (includes 2)	1
674	77–8600	Screw – Tank Mtg	2
832	77–8660	Guard – Muffler	1
*883	77–7760	Gasket – Exhaust	1
994	77–9040	Arrester – Spark	1
*1041	77–8590	Seal – Foam	1

* Included in Gasket Set–Part No. 77–8900

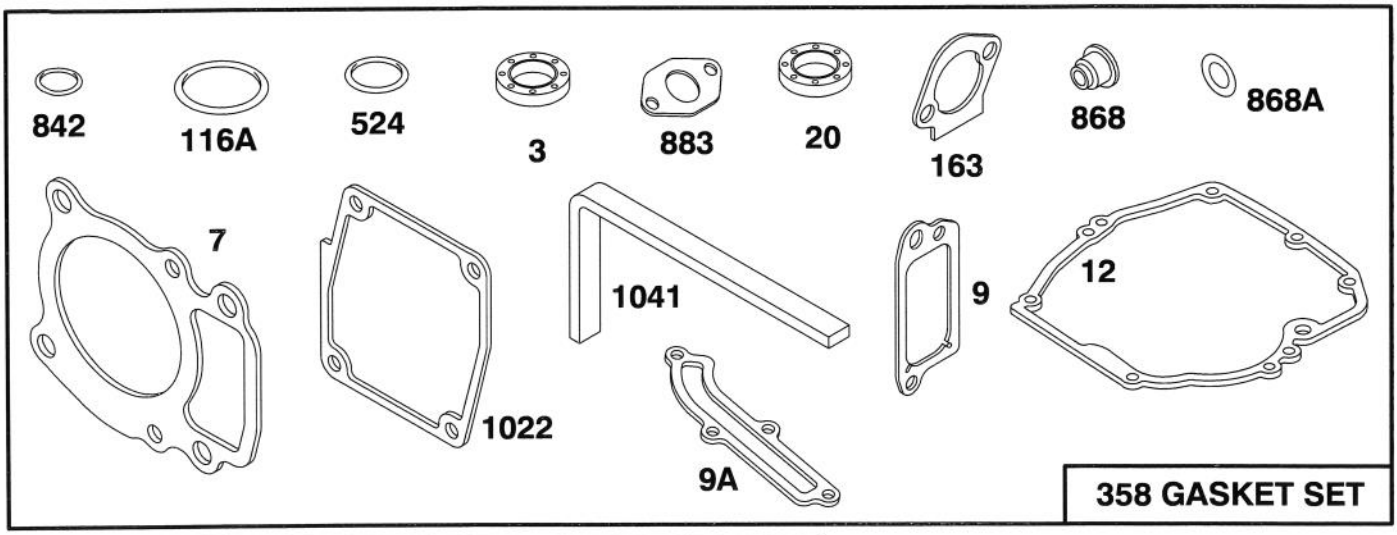

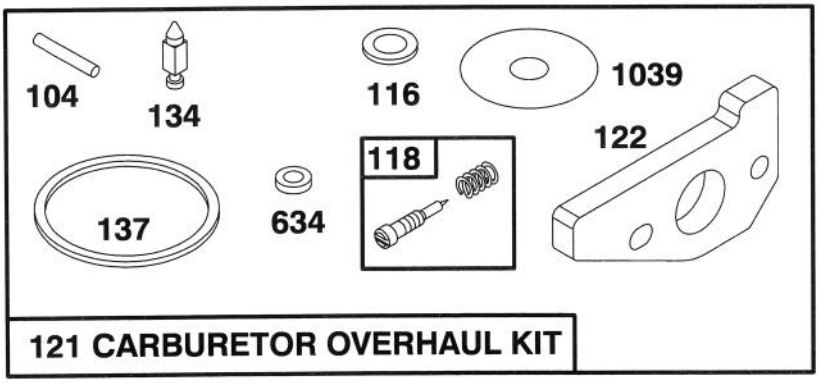

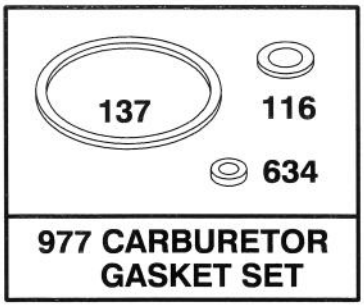

Assemblies include all parts shown in frames.

ENGINE GTS 150

Ref. No.	Part No.	Description	No. Used
*3	77–9060	Seal – Oil	1
*7	77–7740	Gasket – Cylinder Head	1
*9	77–9250	Gasket – Breather	1
*9A	77–7410	Gasket – Breather	1
*12	77–7550	Gasket – Engine Base	1
*20	77–7570	Seal – Oil	1
†104	77–8180	Pin – Float Hinge	1
†‡116	77–8210	Sealing – Gasket	1
*116A	77–7660	O–Ring	1
†118	77–8230	Valve & Spring – Needle	1
121	77–8920	Overhaul Kit – Carburetor	1
†122	77–7820	Adapter Assy.	1
†134	77–8110	Valve – Inlet (Includes Seat)	1

Ref. No.	Part No.	Description	No. Used
†‡137	77–8200	Gasket – Float Bowl	1
*163	77–7960	Gasket – Air Cleaner	1
358	77–8900	Gasket Set	1
*524	77–7270	Seal – O Ring	1
‡634	77–8150	Washer – Seal	2
*842	77–7300	Seal – O Ring	1
*868	77–7890	Seal Assy. – Valve	1
*868A	77–7900	Seal – Valve	1
*883	77–7760	Gasket – Exhaust	1
977	77–8930	Carburetor Gasket Set	1
*1022	77–7320	Gasket – Rocker Cover	1
†1039	77–7250	Limiter – Float	1
*1041	77–8590	Seal – Foam	1

* Included in Gasket Set–Part No. 77–8900 ‡ Included in Carburetor Gasket Kit–Part No. 77–8930
†Included in Carburetor Overhaul Kit–Part No. 77–8920

TORO PART NUMBER INDEX

Part No.	Description	Pg. No.	Ref. No.	Qty.
110352	Gas Cap Assembly	3	9	1
3–3287	Spacer – Handle Latch	6	19	2
3–5792	Washer	1	24	1
8–2759	Bag – Grass	8	4	1
13–5859	Panel – Control	6	6	1
14–9419	Blade – 21	3	11	1
14–9949	Wheel & Tire Assembly	2	39	2
14–9959	Wheel – Tire & Gear Ass'y	4	30	2
16–1599	Housing Assembly	2	46	1
17–9421	Screw – Handle	7	7	2
17–9421	Screw – Handle	6	28	2
19–4050	Knob – Handle Release	6	29	2
22–4710	Charger – Battery	6	15	1
25–7740	Knob – Arm	1	2	2
25–7740	Knob – Arm	4	3	2
26–0670	Screw – Blade	3	14	1
27–6232	Bolt – Wheel	2	38	2
27–6232	Wheel Bolt	4	32	2
27–6250	Bushing – Wheel	4	31	4
27–6250	Bushing – Wheel	2	37	4
27–7210	Screw – Shoulder	6	18	2
27–7211	Screw – Shoulder	6	17	2
29–9570	Bushing – Yoke	4	37	1
33–3208	Rod – Shield	1	32	1
33–4820	Hinge – Bag Door	8	3	1
36–4780	Washer – Thrust	4	42	1
36–4791	Washer – Thrust	4	46	2
36–6910	Spring	8	5	2
37–1393	Door – Grass Bag	8	8	1
37–7260	Screw – Hex Hd. Tapping	1	22	1
37–7262	Screw – Hex. Hd.	2	48	1
38–7820	Bearing – Ball	5	58	1
40–1940	Washer – Wheel Bolt	2	40	4
42–3520	End Cap	4	5	2
42–4020	Frame – Bag	8	6	1
42–4030	Bag Frame – Upper	8	2	1
44–0580	Shield – Trailing	2	33	1
46–5400	Shield – Front	1	31	1
46–5481	Cable – Traction	7	4	1
46–5520	Lever – Traction	7	3	1
46–5780	Switch – Starter	6	7	1
46–6434	Screw – Handle	7	2	1
46–6440	Cover – Control Cables	6	13	1
46–6810	Screw & Washer Assembly	1	7	1
46–6811	Screw & Washer Assembly	1	11	3
46–6980	Support – Cable	7	10	1
46–7030	Retainer – Cable	1	27	1
46–8090	Screw – Tapping	1	20	2
48–2060	Needle Bearing	4	21	2
49–1630	Support – Spacer	7	6	2
49–2040	Screw – Self Tapping	4	8	8
49–2750	Pin – Handle	6	22	2
52–7430	Control Bar Assembly	7	1	1
55–3760	Gear – Pinion 15 Tooth	4	47	1
55–3770	Gear – 49 Tooth 1st Gear	5	56	1
55–3780	Gear – Pinion 20 Tooth	4	48	1
55–3790	Gear – 44 Tooth 2nd Gear	5	55	1
55–3800	Gear – Pinion	5	49	1
55–3810	Gear – 39 Tooth 3rd Gear	5	54	1
55–7520	Battery Assembly	6	23	1
55–8180	Retainer – Battery	6	25	1
60–8710	Gear Case – Upper	5	59	1
60–8730	Cover – Gear Case	4	44	1
60–8750	Bushing – Int. Shaft	4	45	2
60–8770	Bushing – Output Shaft	4	43	1
60–8790	Sleeve – Gear	5	53	1
60–8800	Shaft – Intermediate	5	50	1
60–8810	Retainer – Shift Fork	4	38	1
60–8821	Lever – Shift	4	17	1
60–8840	Pulley – Half	4	10	2
60–8850	Bushing – Output Shaft	5	51	1
60–8870	Yoke – Shift	4	36	1
60–8890	Pinion – Bevel	5	57	1
62–3900	V–Belt	4	13	1
62–4320	Bracket – Belt Guide	4	7	1
62–6660	Spacer	4	9	1
62–6673	Gear Case Assembly	5	*	1
62–7540	Retainer – Blade	3	10	1
62–7550	Pulley – Driver	3	15	1
63–8360	Key – Ignition	6	8	1
63–8701	Pivot Arm Assembly	4	2	2
63–8720	Spring Arm Assembly	4	4	2
65–2720	Ring – Retaining	4	24	4
65–4710	Ring – Friction	4	25	2
65–4720	Spring	4	28	2
65–4730	Thrust Washer	4	22	2
65–4740	Thrust Washer	4	23	4
65–4750	Pinion	4	1	2
65–4760	Washer – Clutch	4	26	2
65–4770	Shaft – Output	4	18	1
65–5250	Clip – Spring	5	61	1
66–0236	Control – Throttle	6	11	1
66–0280	Decal – Instructions	6	5	1
66–0561	Screw – Shoulder	2	36	2
66–0570	Guide – Belt	3	5	1
66–0580	Arm – Pivot	2	41	2
66–0680	Decal – French Regulation	2	49	1
66–1790	Decal – Danger	6	4	1
66–5350	Lever – Control	7	12	1
66–6040	Key – Rocker R.H.	4	*	1
66–6050	Key – Rocker L.H.	4	27	1
70–9760	Bushing	4	19	2
71–0560	Spring Arm Ass'y R.H.	1	1	1
71–0570	Spring Arm Assembly L.H.	2	43	1
71–9350	Bracket – Spring	1	10	1
74–1660	Cover – Wheel	4	29	2
74–1670	Spacer – Wheel Cover	4	33	2
76–0760	Key – Shift	4	40	2
76–0770	Collar – Shift	4	41	1
76–0780	Sleeve – Shift Key	4	39	1
76–2712	Control – Ground Speed	6	2	1
76–4570	Plate – Latch	1	19	1
76–4640	Latch – Plate	1	17	1
76–4650	Grip – Latch	1	16	1
76–4660	Spring – Door	1	12	1
77–0200	Door Assembly	1	14	1
77–0502	Discharge Plug Assembly	1	15	1
77–7040	Cover – Air Cleaner	12	968	1
77–7140	Bracket – Blower Housing	14	980	1
77–7170	Bracket – Fuel Tank	16	182	1
77–7180	Grommet	14	1002	1
77–7200	Cover – Starter	15	925	1
77–7240	Bowl – Fuel	11	136	1
77–7250	Limiter – Float	17	1039	1
77–7250	Limiter – Float	11	1039	1
77–7260	Dipstick – Oil	10	523	1
77–7270	Seal – O Ring	10	*524	1
77–7270	Seal – O Ring	17	*524	1

*Not Illustrated

TORO PART NUMBER INDEX (Cont.)

Part No.	Description	Pg. No.	Ref. No.	Qty.
77–7290	Tube – Oil Filler	10	525	1
77–7300	Seal – O Ring	10	*842	1
77–7300	Seal – O Ring	17	*842	1
77–7320	Gasket – Rocker Cover	17	*1022	1
77–7320	Gasket – Rocker Cover	9	*1022	1
77–7330	Plug – Spark	9	337	1
77–7340	Elbow – Spark Plug	9	635	1
77–7350	Tube – Breather	9	11	1
77–7360	Screw – Hex Head	9	10	4
77–7370	Lever Assy – Governor	10	227	1
77–7380	Bolt – Governor Lever	10	562	1
77–7390	Nut – Hex	10	592	1
77–7400	Cover – Breather	9	572	1
77–7410	Gasket – Breather	17	*9A	1
77–7410	Gasket – Breather	9	*9A	1
77–7420	Screw – Cover Mtg	9	307	4
77–7450	Screw – Hex Head	16	188	7
77–7460	Crank – Governor	10	616	1
77–7470	Washer	10	230	1
77–7480	Pushnut	10	615	1
77–7490	Gear – Cam	10	46	1
77–7500	Gear – Governor	10	219	1
77–7530	Gear – Timing	10	741	1
77–7550	Gasket – Engine Base	10	*12	1
77–7550	Gasket – Engine Base	17	*12	1
77–7560	Base – Engine	10	18	1
77–7570	Seal – Oil	10	*20	1
77–7570	Seal – Oil	17	*20	1
77–7590	Cylinder Assy	9	1	1
77–7600	Pin – Cylinder	9	718	2
77–7610	Tappet – Valve	9	45	2
77–7620	Rod – Push	9	1026	2
77–7630	Screw – Cylinder Head	9	13	4
77–7640	Pump – Oil	10	1024	1
77–7650	Cover – Oil Pump	10	979	1
77–7660	O–Ring	10	*116A	1
77–7660	O–Ring	17	*116A	1
77–7670	Rod – Connecting	10	29	1
77–7690	Piston Assy (Std)	10	25	1
77–7700	Ring Set (Std)	10	26	1
77–7710	Lock – Piston Pin	10	27	2
77–7730	Head – Cylinder	9	5	1
77–7740	Gasket – Cylinder Head	17	*7	1
77–7740	Gasket – Cylinder Head	9	*7	1
77–7760	Gasket – Exhaust	17	*883	1
77–7760	Gasket – Exhaust	16	*883	1
77–7760	Gasket – Exhaust	9	*883	1
77–7770	Guide – Push Rod	9	1034	1
77–7780	Stud – Rocker Arm	9	166	2
77–7790	Arm – Rocker	9	1029	2
77–7800	Cap – Valve	9	238	2
77–7810	Spring – Valve	9	35	2
77–7820	Adapter Assy	11	122	1
77–7820	Adapter Assy	9	122	1
77–7820	Adapter Assy.	17	122	1
77–7850	Bushing – Guide	9	871	1
77–7860	Valve – Exhaust	9	33	1
77–7870	Retainer – Spring	9	40	2
77–7880	Valve – Intake	9	34	1
77–7890	Seal Assy – Valve	9	*868	1
77–7890	Seal Assy. – Valve	17	*868	1
77–7900	Gasket – Valve	9	*868A	1
77–7900	Seal – Valve	17	*868A	1
77–7920	Screw – Air Cleaner	12	969	1
77–7930	Screw – Air Cleaner	12	971	3
77–7940	Base Air Cleaner	12	966	1
77–7950	Element – Filter	12	535	1
77–7960	Gasket – Air Cleaner	12	*163	1
77–7960	Gasket – Air Cleaner	17	*163	1
77–7970	Screw – Hex Head	11	124	2
77–7980	Link – Governor	12	201	1
77–7990	Spring – Governor	12	209	1
77–8000	Bracket – Carburetor	12	620	1
77–8010	Switch – Stop	12	621	1
77–8020	Screw Assy – Speed Adj	1298	A	1
77–8030	Tube – Breather	12	529	1
77–8040	Tube – Vent	11	1011	1
77–8050	Carburetor Assy	11	125	1
77–8070	Valve – Choke	11	108	1
77–8080	Valve – Throttle	11	130	1
77–8090	Screw – Valve Mtg	11	95	1
77–8110	Valve – Inlet	11	134	1
77–8110	Valve – Inlet	17	134	1
77–8120	Adapter – Jet	11	147	1
77–8130	Shaft – Choke	11	141	1
77–8140	Spring – Choke	12	618	1
77–8150	Washer – Seal	11	634	2
77–8150	Washer – Seal	17	634	2
77–8160	Shaft – Throttle	11	131	1
77–8170	Float – Carburetor	11	133	1
77–8180	Pin – Float Hinge	11	104	1
77–8180	Pin – Float Hinge	17	104	1
77–8190	Bowl Assy – Carburetor	11	975	1
77–8200	Gasket – Float Bowl	11	137	1
77–8200	Gasket – Float Bowl	17	137	1
77–8210	Sealing – Gasket	17	116	1
77–8210	Sealing – Gasket	11	116	1
77–8220	Screw – Hex Head	11	955	1
77–8230	Valve & Spring – Needle	11	118	
77–8230	Valve & Spring – Needle	17	118	1
77–8240	Screw – Idle Adj	11	98	1
77–8270	Housing – Blower	14	304	1
77–8300	Screw – Hex Head	13	65	4
77–8310	Screw – Hex Head	10	305	2
77–8310	Screw – Hex Head	14	305	4
77–8330	Flywheel – Magneto	14	23	1
77–8340	Key – Flywheel	14	24	1
77–8350	Cup – Starter	14	455	1
77–8360	Nut – Flywheel	14	332	1
77–8370	Stator Assembly	14	474	1
77–8390	Stud – Stator Mounting	14	305A	1
77–8400	Wire – Ground	14	356	1
77–8420	Armature – Magneto	14	333	1
77–8430	Terminal – Spark Plug	14	851	1
77–8470	Retainer – Rewind Starter	13	456	1
77–8490	Screw – Rewind Starter	13	461	1
77–8500	Spring – Torsion	13	515	1
77–8530	Pawl – Starter	13	459	2
77–8550	Pin – Spring	13	718A	1
77–8570	Cover – Spring	13	1016	1
77–8580	Tank Assy – Fuel	16	180	1
77–8590	Seal – Foam	16	*1041	1
77–8590	Seal – Foam	17	*1041	1
77–8600	Screw – Tank Mtg	16	674	2
77–8620	Hose – Fuel	16	187	1
77–8630	Clamp – Fuel Hose	16	601	2
77–8640	Muffler – Exhaust	16	300	1
77–8660	Guard – Muffler	16	832	1

*Not Illustrated

TORO PART NUMBER INDEX (Cont.)

Part No.	Description	Pg. No.	Ref. No.	Qty.
77–8670	Motor – Starter	15	309	1
77–8680	Bracket Assembly	15	801	1
77–8690	Armature Assembly	15	544	1
77–8690	Head Assembly	15	802	1
77–8700	Shell and Magnet Ass'y	15	803	1
77–8710	Screw – Hex Washer Hd.	15	310	1
77–8720	Screw – Hex Washer Hd.	15	22A	1
77–8740	Washer Set	15	548	1
77–8770	Clutch Assembly	15	513	1
77–8780	Cover – Gear	15	784	1
77–8790	Gasket – Cover	15	785	1
77–8800	Screw – Hex Washer Hd.	15	74	1
77–8810	Pinion – Starter	15	782	1
77–8820	Spline – Starter	15	937	1
77–8830	Retainer – Lock	15	938	1
77–8870	Screw – Hex Head	14	258	2
77–8890	Housing – Rewind Starter	13	55	1
77–8900	Gasket Set	17	358	1
77–8910	Drive Kit	15	510	1
77–8920	Overhaul Kit – Carburetor	17	121	1
77–8930	Carburetor Gasket Set	17	977	1
77–8951	Engine	3	3	1
77–9020	Short Block	9		1
77–9030	Spacer – Fuel Tank	16	670	1
77–9040	Arrester – Spark	16	994	1
77–9050	Screw – Arrester Mtg.	16	346A	1
77–9060	Seal – Oil	17	*3	1
77–9060	Seal – Oil	9	*3	1
77–9070	Screw– Engine Base	10	22	7
77–9090	Screw – Set	9	192A	1
77–9200	Screw – Hex Head	9	10A	2
77–9240	Plug – Pipe	10	15	1
77–9250	Gasket – Breather	17	*9	1
77–9250	Gasket – Breather	9	*9	1
77–9270	Pulley – Rewind Starter	13	56	1
77–9300	Breather Assy	9	8	1
77–9310	Ball & Screw – Rocker	9	192	2
77–9320	Cover – Valve	9	1023	1
77–9330	Crankshaft	10	16	1
77–9340	Pin Assy – Piston	10	28	1
77–9350	Screw – Connecting Rod	10	32	2
77–9360	Screw – Hex Head	10	188	5
77–9360	Screw – Hex Head	12	188A	2
77–9360	Screw – Hex Head	14	188	2
77–9370	Rope – Starter	13	58	1
77–9380	Insert – Rewind Handle	13	59	1
77–9390	Handle – Rewind Starter	13	60	1
77–9400	Starter Assy – Rewind	13	608	1
77–9420	Screw – Armature Mtg.	14	334	2
80–3770	Retainer – Door	1	13	1
80–4790	Harness – Wire	6	26	1
82–5530	Handle – Lower	6	1	1
82–5680	Bracket – Traction Adj.	1	26	1
82–8780	Cable – Retainer	4	15	1
82–9151	Tunnel – Discharge	1	9	1
82–9910	Cover – Belt	1	28	1
84–8330	Handle – Upper	6	3	1
84–8360	Latch – Handle L.H.	6	16	1
84–8400	Latch – Handle R.H.	6	30	1
86–7990	Screw – Clamp	3	2	1
86–9670	Guide – Rope	7	13	1
92–1599	Stiffener – Accelerator	3	12	1
92–1720	Plate – Kicker Right Front	1	3	1
92–1730	Plate – Kicker Left Front	1	4	1
92–1750	Plate – Kicker Left Rear	1	21	1
92–2289	Plate – Toro	3	8	1
92–7663	Cover – Wheel	2	50	1
92–7856	Decal – H.O.C.	1	6	4
92–7857	Decal – Recoil	3	4	1
92–7858	Decal – Deck	2	45	1
92–7862	Decal – Toro	6	31	1
92–8659	Decal – Charging Instructions	6	24	1
92–9077	Decal – DIN	2	35	1
218–461	Nut – Hex	6	9	1
2210–249	Clamp – Throttle	3	1	1
2210–316	Stop – Rope	3	16	1
237–153	O–Ring	5	60	2
2412–50	Clip – Convoluted Tubing	6	12	3
2412–83	R–Clamp	1	30	1
2412–87	Clamp – Cable	1	23	1
302–56	Fitting – Grease	4	20	2
321–3	Screw – Hex Hd. Cap	7	11	1
3253–22	Washer – Lock	3	13	1
3254–5	Washer – Lock	6	10	1
3256–22	Washer – Flat	7	9	1
3256–24	Washer – Flat	4	12	1
3272–10	Pin – Cotter	4	14	1
3290–378	Tie – Cable	6	14	5
3290–422	Nut – Push	8	1	2
3295–35	Rivet	1	18	1
3296–5	Locknut	4	11	1
3296–6	Locknut	4	34	2
3296–6	Nut – Lock	2	42	4
3296–29	Nut – Lock	6	20	3
3296–42	Nut – Lock	7	8	3
3296–47	Nut – Lock	6	21	3
3296–58	Locknut	7	5	2
32121–120	Pin – Coil	5	52	1
32144–70	Screw – Hex Washer Hd.	3	6	2
32144–70	Screw – Thread Forming	4	16	1
32144–70	Screw – Thread Forming	1	25	5
32144–85	Screw	4	35	2
32144–85	Screw – Thread Forming	2	44	2
32144–102	Screw – Thread Forming	3	7	3
32144–111	Screw – Plastite	1	5	6
32144–112	Screw – Self Tapping	1	29	1
32144–115	Screw – Self Tap Slotted	6	27	5

OPTIONAL EQUIPMENT

Side Discharge Chute Kit ..... Model No. 59110
Wear Plate Kit ..... Part No. 49–4080
Dethatcher Kit ..... Model No. 59131

*Not Illustrated