FORM NO. 3316–628

TORO®

MODEL NO. 51576–4900001 & UP

PARTS CATALOG

SUPERBLOWER
Blower & Vacuum

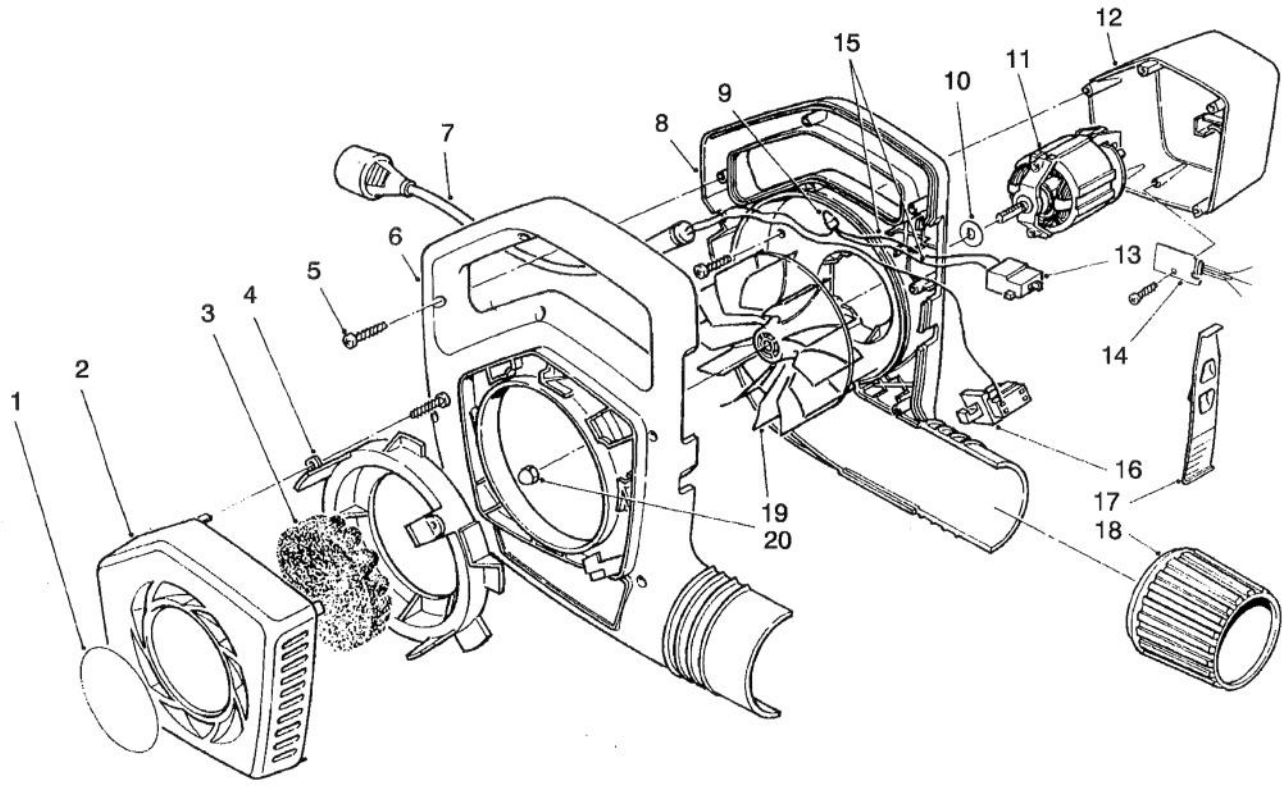

C–1687

BLOWER ASSEMBLY

Ref. No.	Part No.	Description	No. Used
1	73–7580	Decal – Cover	1
2	73–1341	Cover – Intake	1
3	73–3090	Foam – Center	1
4	73–1351	Ring – Coupling	1
5	32104–121	Screw – Self Tapping	17
6	60–9613	Housing – Blower, R.H.	1
7	73–3473	Cord – Power Supply	1
8	61–8432	Housing – Blower, L.H.	1
9	218–511	Connector – Wire	1
10	57–4271	Washer – Impeller	2

Ref. No.	Part No.	Description	No. Used
11	73–1370	Motor – Blower	1
12	57–1074	Cover – Motor	1
13	73–5780	Switch – 2 Speed	1
14	73–5790	Diode Assembly	1
15	73–3170	Wire	2
16	57–5910	Switch – Interlock	1
17	57–5942	Switch – Cam, 2 Speed	1
18	57–3261	Collar – Output	1
19	73–1330	Impeller	1
20	73–5380	Nut – Cap, Locking	1

© The TORO Company –1993
All Rights Reserved

TPS

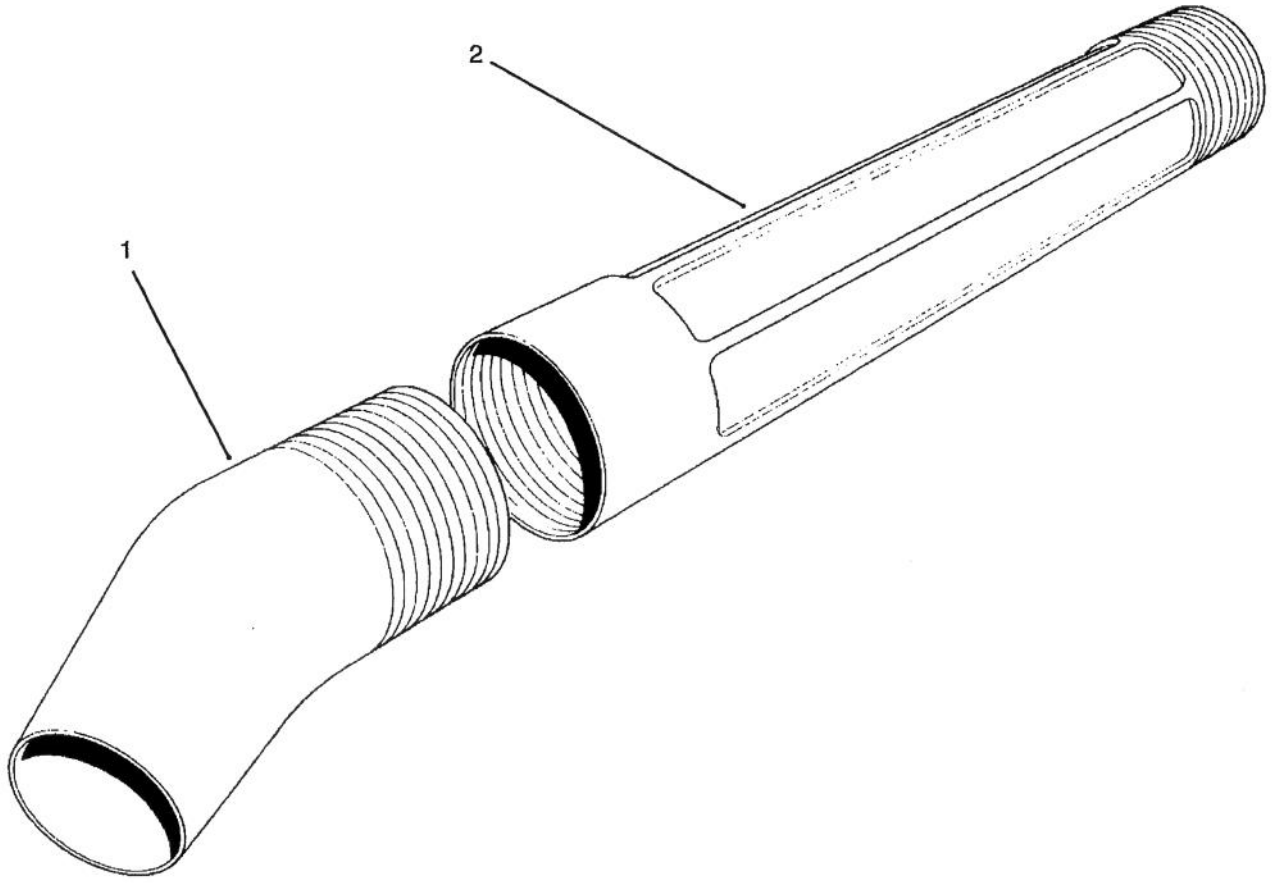

C–1686

BLOWER TUBE ASSEMBLY

Ref. No.	Part No.	Description	No. Used
1	57–3280	Nozzle – Concentrating	1
2	57–3270	Tube – Blower	2

Ref. No.	Part No.	Description	No. Used

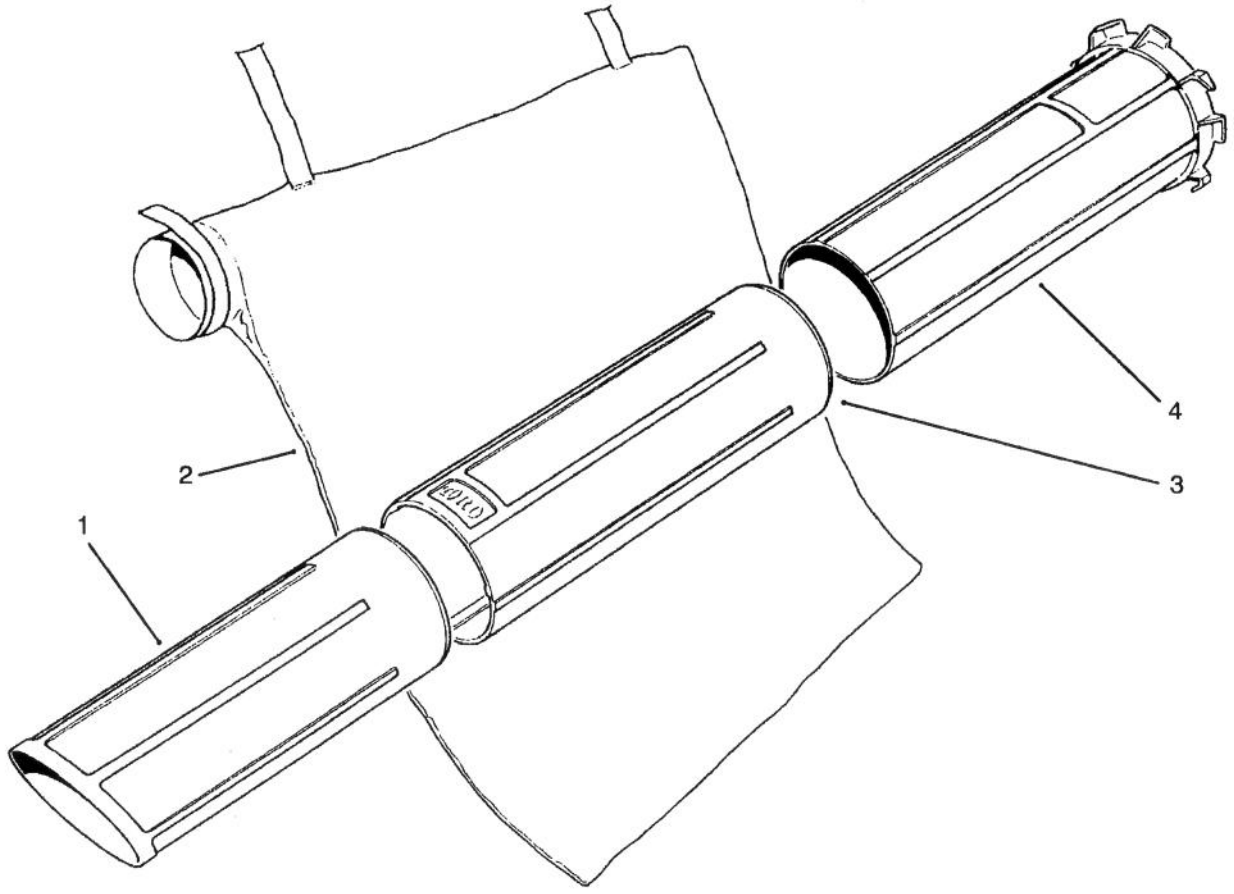

C–1685

VACUUM TUBES AND BAGGING KIT Model No. 51533

Ref. No.	Part No.	Description	No. Used
1	73–1460	Tube – Vacuum, Lower	1
2	73–1640	Bag – Vacuum	1

Ref. No.	Part No.	Description	No. Used
3	73–1450	Tube – Vacuum, Middle	1
4	73–3990	Tube – Vacuum, Upper	1

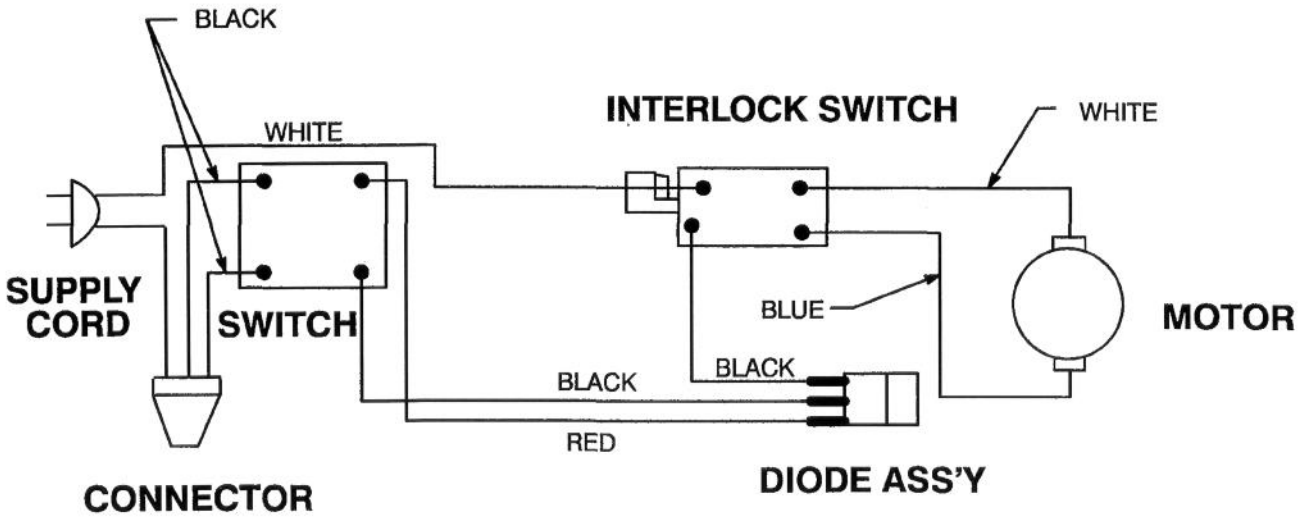

C–1698

ELECTRICAL SCHEMATIC

Ref. No.	Part No.	Description	No. Used

Ref. No.	Part No.	Description	No. Used

TORO PART NUMBER INDEX

Part No.	Description	Pg. No.	Ref. No.	Qty.
57–1074	Cover – Motor	1	12	1
57–3261	Collar – Output	1	18	1
57–3270	Tube – Blower	2	2	2
57–3280	Nozzle – Concentrating	2	1	1
57–4271	Washer – Impeller	1	10	2
57–5910	Switch – Interlock	1	16	1
57–5942	Switch – Cam, 2 Speed	1	17	1
60–9613	Housing – Blower, R.H.	1	6	1
61–8432	Housing – Blower, L.H.	1	8	1
73–1330	Impeller	1	19	1
73–1341	Cover – Intake	1	2	1
73–1351	Ring – Coupling	1	4	1
73–1370	Motor – Blower	1	11	1
73–7580	Decal – Cover	1	1	1
73–1450	Tube – Vacuum, Middle	3	3	1
73–1460	Tube – Vacuum, Lower	3	1	1
73–1640	Bag – Vacuum	3	2	1
73–3090	Foam – Center	1	3	1
73–3170	Wire	1	15	2
73–3473	Cord – Power Supply	1	7	1
73–3990	Tube – Vacuum, Upper	3	4	1
73–5380	Nut – Cap, Locking	1	20	1
73–5780	Switch – 2 Speed	1	13	1
73–5790	Diode Assembly	1	14	1
218–511	Connector – Wire	1	9	1
32104–121	Screw – Self Tapping	1	5	17

*Not Illustrated

PRODUCT CHANGES

In an effort to make improvements available to TORO owners as quickly as possible, minor changes are incorporated into Toro's products from time to time that do not become immediately shown in the Parts Catalog. If such a change has been made in your unit, which is not reflected in your manual, see your TORO Distributor or his Authorized TORO Service Dealer for information and part numbers.

COUNTRIES OTHER THAN THE UNITED STATES OR CANADA

Customers who have purchased TORO products exported from the United States or Canada should contact their Toro Distributor (Dealer) to obtain guarantee policies for your country, province or state. If for any reason you are dissatisfied with your Distributor's service or have difficulty obtaining guarantee information, contact the TORO importer. If all other remedies fail, you may contact us at The Toro Company.

MAINTENANCE RECORD

Date								

Compliance with Radio Interference Regulations Certified.
Certifie Conforme au Reglement sur le Brouillage Radioelectrique.

Litho in U.S.A.