Form No. 3362-312 Rev A

TITAN® QuickChange™ Tine Heads

for ProCore 648, 864 or 1298 Aerator

Model No. 09711 (Three Tine)

Model No. 09719 (Four Tine)

Installation Instructions

Installation

1. Install the tine heads onto the aerator stomper arms with three (3) 1/2 x 1-1/4 capscrews (Figure 1). Torque the capscrews to 70-80 ft-lbs.

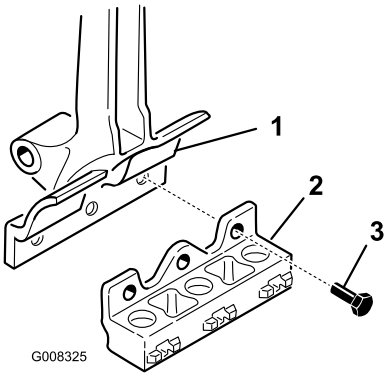

Figure 1

1. Stomper arm
2. Tine head
3. Capscrew

2. Insert a QuickChange sleeve onto the top of the tine until the top of the tine contacts the upper shoulder of the sleeve (Figure 2).

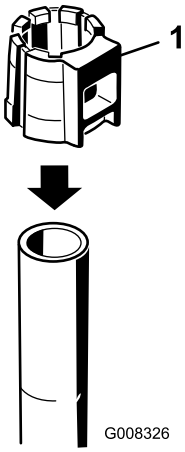

Figure 2

1. Sleeve

Note: Hollow coring tines have no specific orientation. A Side Eject tine should have the ejection window facing the sleeve's window (Figure 3).

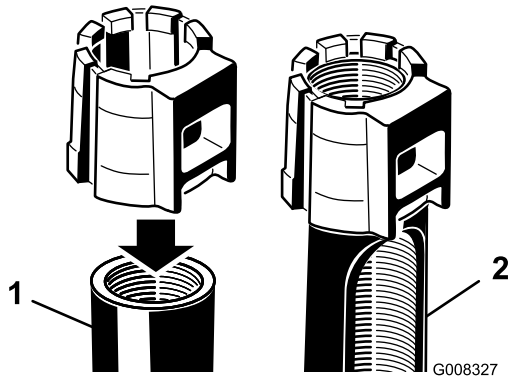

Figure 3

1. Hollow tine
2. Side eject tine

3. While aligning the sleeve window with the tine head opening, insert the tine/sleeve assembly into the tine head.
4. Lock the tine/sleeve assembly in place with the QuickChange tool by prying the sleeve upwards into the tine head (Figure 4). Do not use an extension bar to insert tines.

Note: Either end of the QuickChange tool can be used for insertion or extraction of the tine/sleeve.

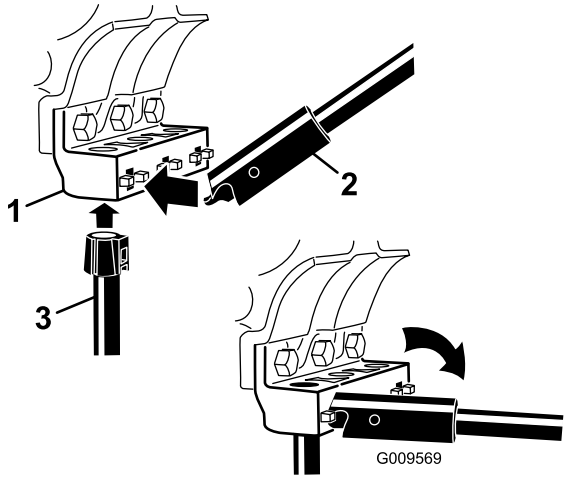

Figure 4

1. Tine head
2. QuickChange tool
3. Tine/sleeve assembly

© 2009 —The Toro® Company
8111 Lyndale Avenue South
Bloomington, MN 55420

Register at www.Toro.com.

Original Instructions (EN)
Printed in the USA.
All Rights Reserved

Note: The Titan® QuickChange™ tine heads are recommended for use with coring, cross or slicing tines for optimum performance. The Titan® QuickChange™ tine head sleeves are highly engineered Toro parts that are subject to wear or breakage depending on usage, tine selection and soil conditions.

Removal

1. Clean all dirt built up from the sleeve window
2. Insert the QuickChange tool into the sleeve window (Figure 5). The best leverage is attained with full engagement of tool. Do not use an extension bar for the extraction of tines

   Note: Either end of the QuickChange tool can be used for insertion or extraction of the tine/sleeve.

   Note: In the event the sleeve/tine cannot be removed with the QuickChange tool, remove the tine head and use a press to remove.

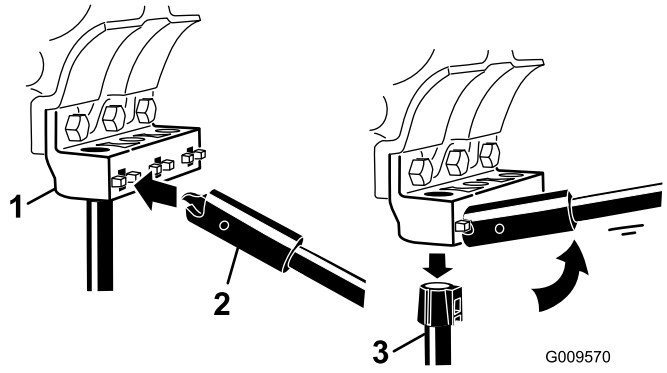

Figure 5

1. Tine head
2. QuickChange tool
3. Tine/sleeve assembly

3. Release the tine/sleeve assembly by prying down on the sleeve with the QuickChange tool (lifting up on the tool).
4. Clean dirt built up from the sleeve.

Removing the Sleeve from the Tine

Note: In many cases the sleeve fits tightly to the tine and cannot be removed by hand.

1. Use the flat blade of a screw driver to help open the sleeve and slide the sleeve off the tine (Figure 6).

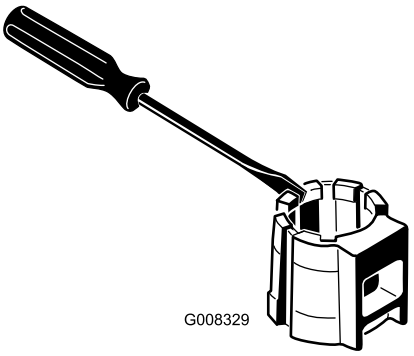

Figure 6

2. Install the sleeve onto a new tine and repeat procedure.