FORM NO. 3316–633

TORO®

MODEL NO. 78230–4900001 & UP

PARTS CATALOG

WHEEL HORSE®

42" (107cm) Cutting Unit

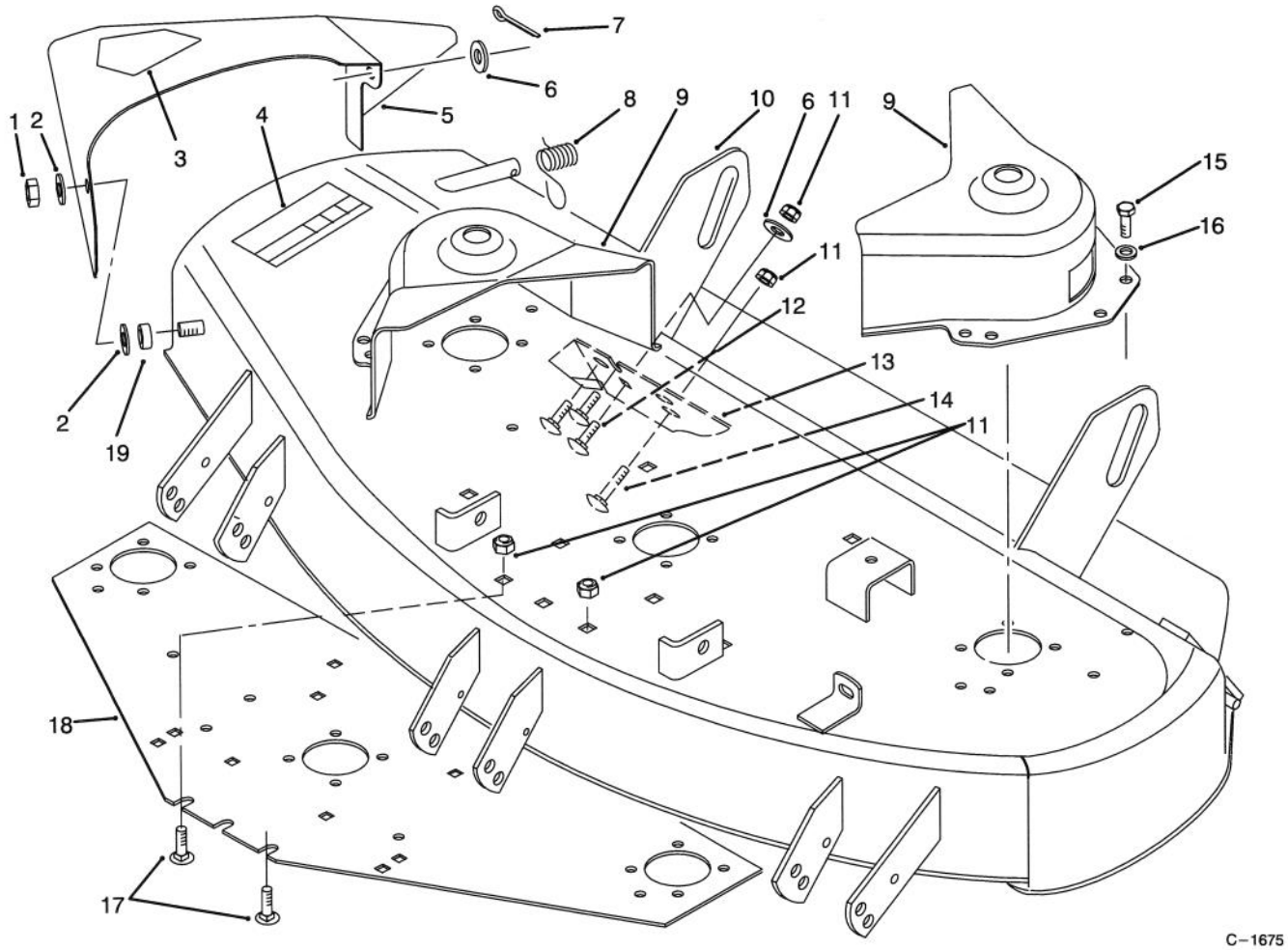

DECK ASSEMBLY

Ref. No.	Part No.	Description	No. Used
1	915236	Nut – Jam	1
2	116083	Washer – Nylon	2
3	54–9220	Decal – Danger	1
4	66–1340	Decal – Danger	1
5	88–2750	Chute/Decal Assembly (Incl. Ref. #3)	1
6	3256–26	Washer – Flat	4
7	3272–10	Pin – Cotter	1
8	116082	Spring – Deflector	1
9	78–6891	Cover – Belt	2
10	92–8014	Deck/Safety Decal Assy. (Incl. Ref. #4, pg. 1 Ref. #21, pg. 3)	1

Ref. No.	Part No.	Description	No. Used
11	3296–39	Nut – Lock	9
12	3231–22	Bolt – Carriage	3
13	79–2831	Wear Plate – R.H.	1
14	3231–5	Bolt – Carriage	2
15	926671	Screw – Cap Hex. Hd.	4
16	3256–22	Washer – Flat	4
17	3231–1	Bolt – Carriage	4
18	78–8530	Plate – Reinforcement	1
19	116080	Bushing	1

© The TORO Company – 1993
All Rights Reserved

TPS

3316–633

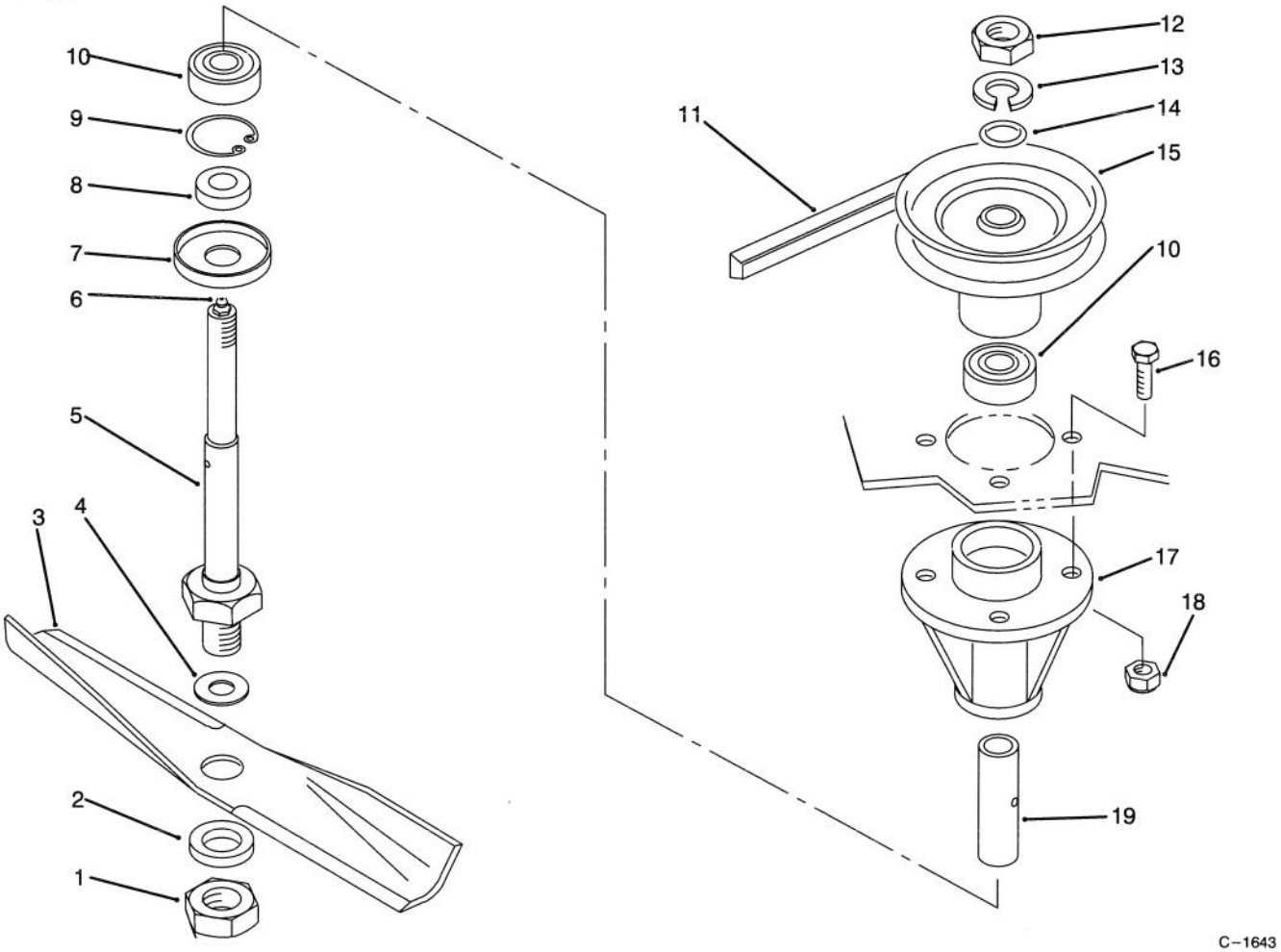

C–1643

SPINDLE ASSEMBLY

Ref. No.	Part No.	Description	No. Used
1	3220–7	Nut – Hex.	1
2	3256–28	Washer – Flat	1
3	106636	Kit – Blade (Set of 3)	1
4	920257	Washer	1
5	78–6710	Shaft – Spindle	1
6	302–5	Fitting – Grease	1
7	106067	Cup – Spindle	1
8	106068	Spacer	1
9	32120–42	Ring – Retaining	1

Ref. No.	Part No.	Description	No. Used
10	109966	Bearing	2
11	78–6240	V–Belt	1
12	3220–6	Nut – Hex.	1
13	3253–8	Washer – Lock	1
14	971015	O–Ring	1
15	78–1210	Pulley – Spindle	1
16	908032	Screw – Cap Hex. Hd.	4
17	114568	Housing – Spindle	1
18	3296–39	Nut – Lock	4
19	116085	Spacer	1

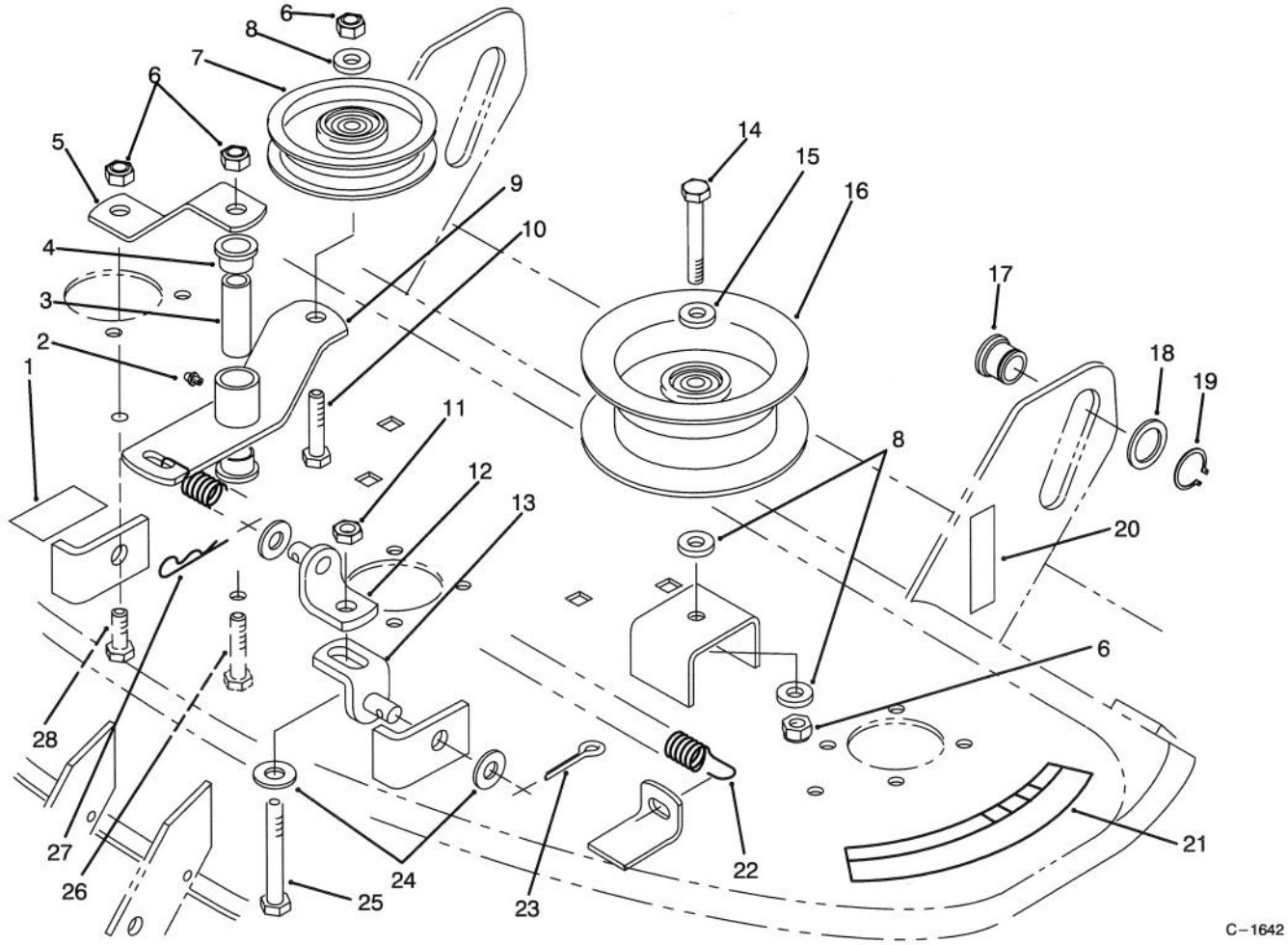

PULLEYS & IDLER ARM ASSEMBLY

Ref. No.	Part No.	Description	No. Used
1	116286	Decal – Belt Routing	1
2	302–26	Fitting – Grease	1
3	79–2760	Spacer	1
4	109859	Bushing	2
5	78–3140	Strap – Brace	1
6	3296–39	Nut – Lock	4
7	115119	Pulley – Idler	1
8	3256–24	Washer – Flat	3
9	78–3150	Arm W.A. – Idler	1
10	323–9	Screw – Cap Hex. Hd.	1
11	3218–5	Nut – Hex.	1
12	86–9250	Bracket W.A. – Lift, Upper	1
13	86–9240	Bracket W.A. – Lift, Lower	1
14	323–11	Screw – Cap Hex. Hd.	1

Ref. No.	Part No.	Description	No. Used
15	2844	Washer	1
16	78–8250	Pulley – Idler	1
17	78–7340	Roller – Lift	2
18	920239	Washer	2
19	32151–29	Ring – Retaining	2
20	115196	Decal – Attach–A–Matic	2
21	76–4070	Decal – Danger	1
22	116172	Spring – Extension	1
23	3272–21	Pin – Cotter	1
24	3256–26	Washer – Flat	3
25	325–13	Screw – Cap Hex. Hd.	1
26	323–14	Screw – Cap Hex. Hd.	1
27	933506	Pin – Cotter, Hair	1
28	323–6	Screw – Cap Hex. Hd.	1

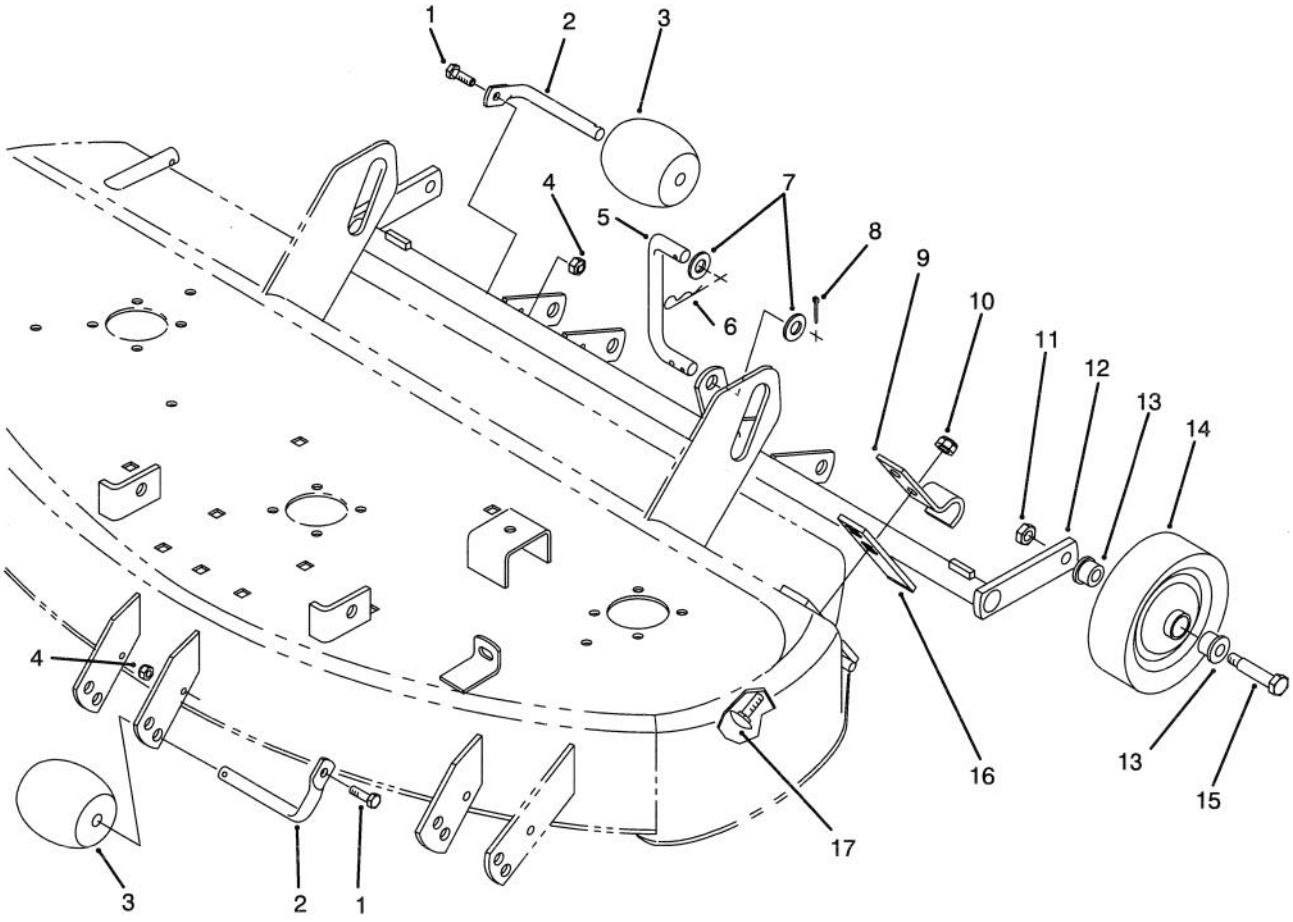

C–1644

GAGE WHEEL & ROLLER ASSEMBLY

Ref. No.	Part No.	Description	No. Used
1	908004	Screw – Cap Hex. Hd.	5
2	118960	Shaft – Roller	5
3	29–4820	Roller	5
4	3296–42	Nut – Lock	5
5	78–6681	Link – Rear	1
6	933507	Pin – Cotter, Hair	2
7	3256–26	Washer – Flat	2
8	3272–21	Pin – Cotter	1
9	110837	Clamp	2
10	3296–39	Nut – Lock	2

Ref. No.	Part No.	Description	No. Used
11	32146–2	Nut – Hex.	2
12	78–6661	Support W.A. – Wheel, Gage	1
13	5306	Bushing	4
14	110506	Assembly – Wheel (Incl. Ref. #13)	2
15	5188	Bolt – Wheel	2
16	110838	Bar	2
17	3231–4	Bolt – Carriage	2

TORO PART NUMBER INDEX

Part No.	Description	Pg. No.	Ref. No.	Qty.
2844	Washer	3	15	1
5188	Bolt – Wheel	4	15	2
5306	Bushing	4	13	4
106067	Cup – Spindle	2	7	1
106068	Spacer	2	8	1
106636	Kit – Blade	2	3	1
109859	Bushing	3	4	2
109966	Bearing	2	10	2
110506	Assembly – Wheel	4	14	2
110837	Clamp	4	9	2
110838	Bar	4	16	2
114568	Housing – Spindle	2	17	1
115119	Pulley – Idler	3	7	1
115196	Decal – Attach–A–Matic	3	20	2
116080	Bushing	1	19	1
116082	Spring – Deflector	1	8	1
116083	Washer – Nylon	1	2	2
116085	Spacer	2	19	1
116172	Spring – Extension	3	22	1
116286	Decal – Belt Routing	3	1	1
118960	Shaft – Roller	4	2	5
908004	Screw – Cap Hex. Hd.	4	1	5
908032	Screw – Cap Hex. Hd.	2	16	4
915236	Nut – Jam	1	1	1
920239	Washer	3	18	2
920257	Washer	2	4	1
926671	Screw – Cap Hex. Hd.	1	15	4
933506	Pin – Cotter, Hair	3	27	1
933507	Pin – Cotter, Hair	4	6	2
971015	O–Ring	2	14	1
29–4820	Roller	4	3	5
54–9220	Decal – Danger	1	3	1
66–1340	Decal – Danger	1	4	1
76–4070	Decal – Danger	3	21	1
78–1210	Pulley – Spindle	2	15	1
78–3140	Strap – Brace	3	5	1
78–3150	Arm W.A. – Idler	3	9	1
78–6240	V–Belt	2	11	1
78–6661	Support W.A. – Wheel,	4	12	1
78–6681	Link – Rear	4	5	1
78–6710	Shaft – Spindle	2	5	1
78–6891	Cover – Belt	1	9	2
78–7340	Roller – Lift	3	17	2
78–8250	Pulley – Idler	3	16	1
78–8530	Plate – Reinforcement	1	18	1
79–2760	Spacer	3	3	1
79–2831	Wear Plate – R.H.	1	13	1
86–9240	Bracket W.A. – Lift, Lower	3	13	1
86–9250	Bracket W.A. – Lift, Upper	3	12	1
88–2750	Chute/Decal Assembly	1	5	1
92–8014	Deck/Safety Decal Assy.	1	10	1
302–5	Fitting – Grease	2	6	1
302–26	Fitting – Grease	3	2	1
323–6	Screw – Cap Hex. Hd.	3	28	1
323–9	Screw – Cap Hex. Hd.	3	10	1
323–11	Screw – Cap Hex. Hd.	3	14	1
323–14	Screw – Cap Hex. Hd.	3	26	1
325–13	Screw – Cap Hex. Hd.	3	25	1
3218–5	Nut – Hex.	3	11	1
3220–6	Nut – Hex.	2	12	1
3220–7	Nut – Hex.	2	1	1
3231–1	Bolt – Carriage	1	17	4
3231–4	Bolt – Carriage	4	17	2
3231–5	Bolt – Carriage	1	14	2
3231–22	Bolt – Carriage	1	12	3
3253–8	Washer – Lock	2	13	1
3256–22	Washer – Flat	1	16	4
3256–24	Washer – Flat	3	8	3
3256–26	Washer – Flat	1	6	4
3256–26	Washer – Flat	4	7	2
3256–26	Washer – Flat	3	24	3
3256–28	Washer – Flat	2	2	1
3272–10	Pin – Cotter	1	7	1
3272–21	Pin – Cotter	4	8	1
3272–21	Pin – Cotter	3	23	1
3296–39	Nut – Lock	3	6	4
3296–39	Nut – Lock	4	10	2
3296–39	Nut – Lock	1	11	9
3296–39	Nut – Lock	2	18	4
3296–42	Nut – Lock	4	4	5
32120–42	Ring – Retaining	2	9	1
32146–2	Nut – Hex.	4	11	2
32151–29	Ring – Retaining	3	19	2

*Not Illustrated

PRODUCT CHANGES

In an effort to make improvements available to TORO owners as quickly as possible, minor changes are incorporated into Toro's products from time to time that do not become immediately shown in the Parts Catalog. If such a change has been made in your unit, which is not reflected in your manual, see your TORO Distributor or his Authorized TORO Service Dealer for information and part numbers.

COUNTRIES OTHER THAN THE UNITED STATES OR CANADA

Customers who have purchased TORO products exported from the United States or Canada should contact their Toro Distributor (Dealer) to obtain guarantee policies for your country, province or state. If for any reason you are dissatisfied with your Distributor's service or have difficulty obtaining guarantee information, contact the TORO importer. If all other remedies fail, you may contact us at The Toro Company.

MAINTENANCE RECORD

Date								

Compliance with Radio Interference Regulations Certified.
Certifie Conforme au Reglement sur le Brouillage Radioelectrique.

Litho in U.S.A.

MAINTENANCE RECORD

Date								

MAINTENANCE RECORD

Date								