Form No. 3358–741 Rev. B

Light Kit

Greensmaster® 1000, 1600, Flex 18 & Flex 21

Model No. 04057

Model No. 110–3463

Installation Instructions

Caution

Before servicing or making adjustments to the machine, stop engine and remove the wire from the spark plug.

1. Mount a light to each side of handle as follows:

For Greensmaster Flex 18

- Align the **inner** set of light bracket mounting holes with the handle. The light bracket should extend outward from the handle (Fig. 1).

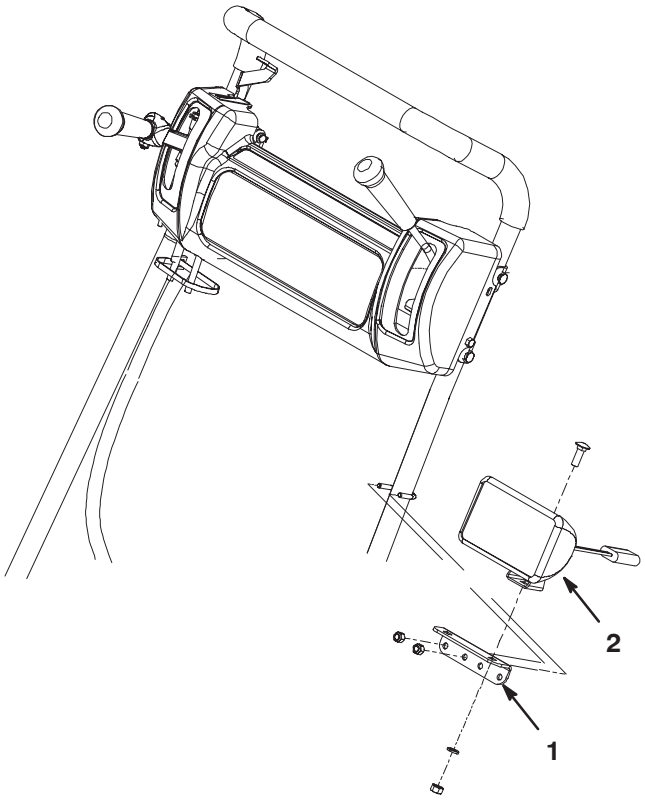

Figure 1

1. Light bracket
2. Light

- Loosely secure the light bracket to the handle with a clamp and two nylon insert locknuts (Fig. 1).
- Position the light bracket approximately 6” below the console.
- Tighten the two nylon insert locknuts (Fig. 1).
- Using the **outer** mounting hole in the light bracket, mount the light to the bracket with a carriage bolt, lock washer and nut (Fig. 1).

For Greensmaster Flex 21, Greensmaster 1000 and Greensmaster 1600

- Align the **outer** set of light bracket mounting holes with the handle. The light bracket should extend inward from the handle (Fig. 2).

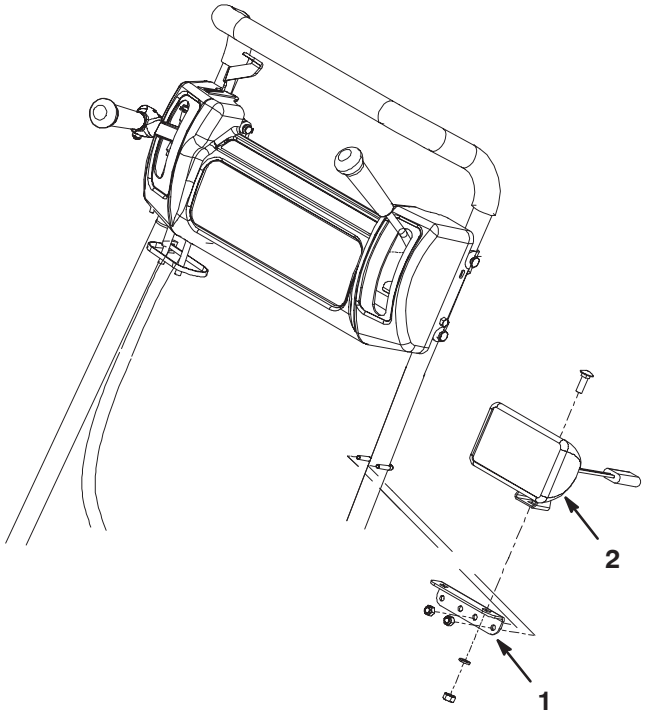

Figure 2

1. Light bracket
2. Light

- Loosely secure the light bracket to the handle with a clamp and two nylon insert locknuts (Fig. 2).
- Position the light bracket approximately 6” below the console.
- Tighten the two nylon insert locknuts (Fig. 2).
- Using the **outer** mounting hole in the light bracket, mount the light to the bracket with a carriage bolt, lock washer and nut (Fig. 2).

© 2007, 2009 by The Toro Company
8111 Lyndale Avenue South
Bloomington, MN 55420-1196

All Rights Reserved
Printed in the USA

2. Use the template to mark the location of the (2) switch mounting holes in the console as follows:

   - On Greensmaster Flex 21 mowers, position the radius corner of the template into the upper left corner on the front of the console (Fig. 3).

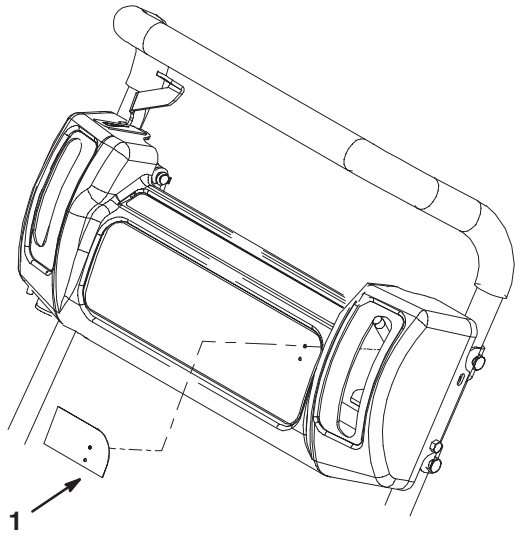

Figure 3

1. Template

   - On Greensmaster 1000 and 1600 mowers, position the template into the upper left corner on the back of the console so the radius corner is to the upper right and the left edge is aligned with the right side of the parking brake bracket (Fig. 4).

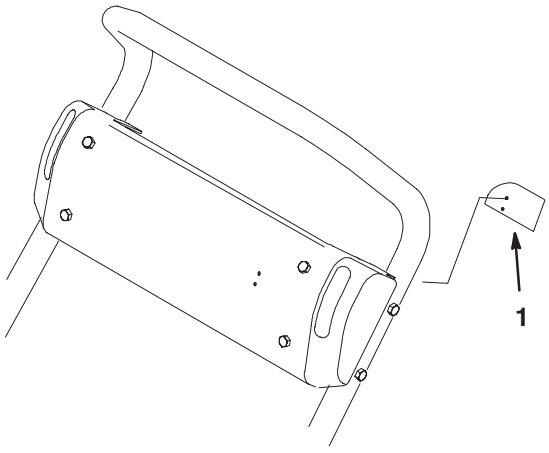

Figure 4

1. Template

3. At the locations marked on either console, drill (2) .125 in. dia. holes.
4. Drill the upper hole out to .500 in. dia.
5. Install the ON/OFF toggle switch as follows:

   - Remove and discard the tabbed washer from the switch (Fig. 5).
   - From the back of the console, insert the switch into the larger drilled hole (Fig. 5).

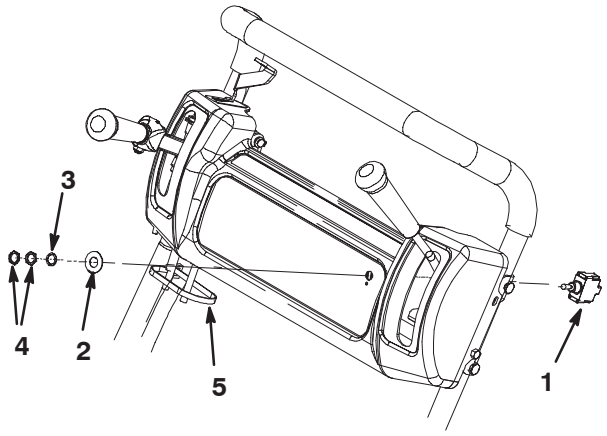

Figure 5

1. Toggle switch
2. Larger tabbed washer w/decal
3. Wave washer
4. Jam nuts
5. Cable tie

   - Slide the new tabbed washer w/decal onto the switch while inserting the tab into the small drilled hole (Fig. 5).
   - Secure the switch and components to the console with the wave washer and (2) jam nuts (Fig. 5).

6. Connect the wire harness as follows:

   - Plug the large wire harness connector into the L.H. light.
   - Route the harness along the bottom of the console panel.
   - Connect the single wire lead to the bottom terminal on the toggle switch.
   - Connect the double wire lead to the center terminal on the toggle switch.
   - Plug the next wire harness connector into the R.H. light.
   - Route the harness down the R.H. handle to the rear of the engine.
   - Plug the two harness connectors into the yellow leads coming from engine.
   - Plug the voltage regulator connector into the wire harness connector.

7. Mount the voltage regulator, voltage regulator strap, washers and R–clamp to the capscrew with a jam nut and locknut (Fig. 6).

8. Mount the voltage regulator strap, volrage regulator ground wire ring terminal and the harness ground wire ring terminal to the engine boss with a external tooth lockwasher and capscrew (Fig. 6). Use the right hand boss.

Note: If an hour meter is mounted to the right hand engine boss, remove the hour meter screw securing it to the right hand boss and mount the light kit components on top of the hour meter.

9. Feed the engine wires and the voltage regulator wires through the R–clamp (Fig. 6).

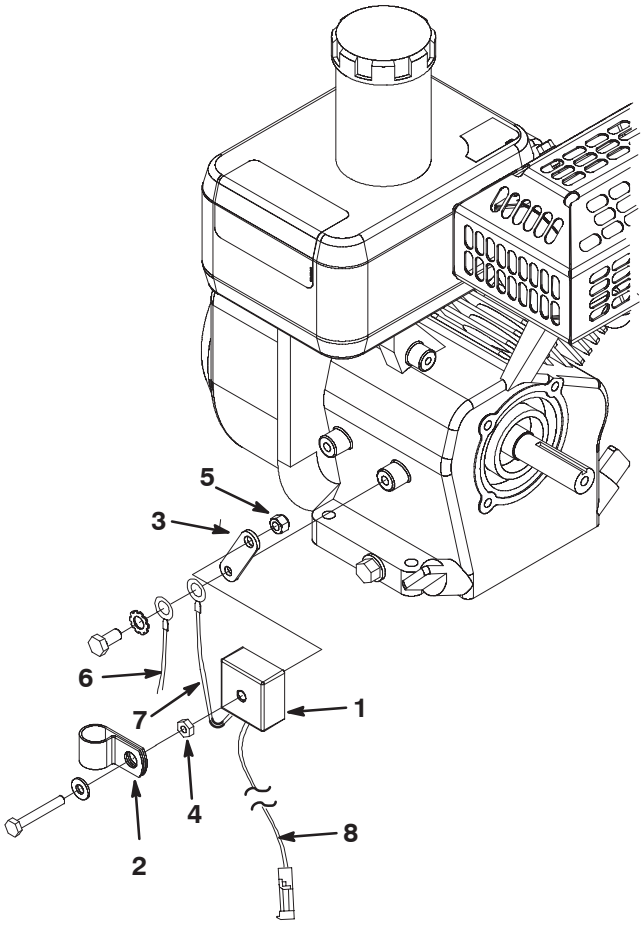

Figure 6

1. Voltage regulator
2. R–clamp
3. Voltage regulator strap
4. Jam nut
5. Lock nut
6. Harness ground wire
7. Regulator ground wire
8. Voltage regulator connector to wire harness connector

10. Secure the wire harness to the handle using the nylon cable ties. Check all the wires for excess bending, chaffing or interference with mounting parts.


TORO®