Form No. 3360-473 Rev B

DH 200, DH 210, and DH 220 Lawn Tractors

Serial No. 280000001 and Up

Setup Instructions

Loose Parts

Use the chart below to verify that all parts have been shipped.

Procedure	Description	Qty.	Use
1	Steering Wheel Lock Washer Nut	1 1 1	Installing the steering wheel
2	Seat Bolts Flat Washers Spring Washers	1 2 2 2	Installing the seat
3	Trailer Hitch Bolts Nuts	1 2 2	Attaching the trailer hitch
4	Collector Cover Grass Collector—Partially Assembled Grass Bag Fastener Package Arrow Decal	1 1 1 1 1	Assembling the grass collector
5	No parts required	–	Checking the oil level
6	No parts required	–	Activating the battery
7	No parts required	–	Filling the fuel tank
8	No parts required	–	Checking the tire pressure
9	No parts required	–	Lubricating the machine
10	Keys	2	Using in the ignition and Key Choice™ switch
11	No parts required	–	Check the safety system
12	Operator’s Manual Engine Operator’s Manual	1 1	Reading before operating the machine
13	Certificate of Conformance	1	CE conformance

© 2009—The Toro® Company
8111 Lyndale Avenue South
Bloomington, MN 55420

Register at www.Toro.com.

CE

Original Instructions (EN)
Printed in the USA
All Rights Reserved

1

Installing the Steering Wheel

Parts needed for this procedure:

1	Steering Wheel
1	Lock Washer
1	Nut

Procedure

1. Position the front wheels straight ahead.
2. Remove the logo cover by releasing the 3 latches from the back side with a screwdriver.
3. Line up the center spoke toward the seat and position the steering wheel onto the shaft spline (Figure 1).

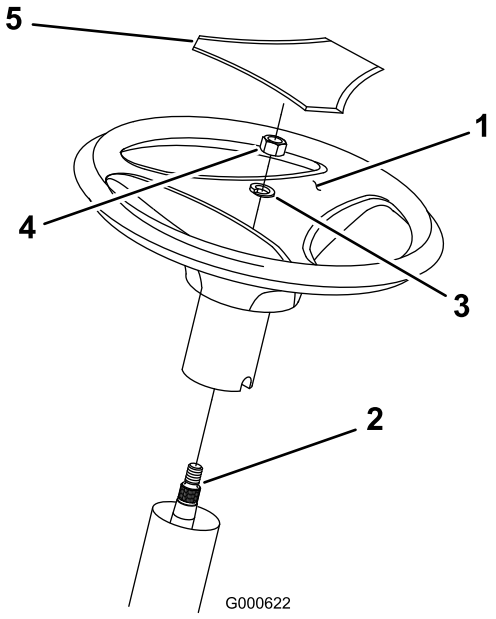

Figure 1

1. Center spoke
2. Shaft spline
3. Lock washer
4. Nut
5. Logo cover

4. Secure the steering wheel with a lock washer and nut (Figure 1).
5. Torque the steering wheel nut to 50 ft-lb (37 N-m).
6. Snap the logo cover into place (Figure 1).

2

Installing the Seat

Parts needed for this procedure:

1	Seat
2	Bolts
2	Flat Washers
2	Spring Washers

Procedure

1. Remove the plastic cover from the seat and discard it.
2. Loosen the two bolts on the seat hinges.
3. Set the seat in place and secure it with the two bolts, spring washers, and flat washers (Figure 2).

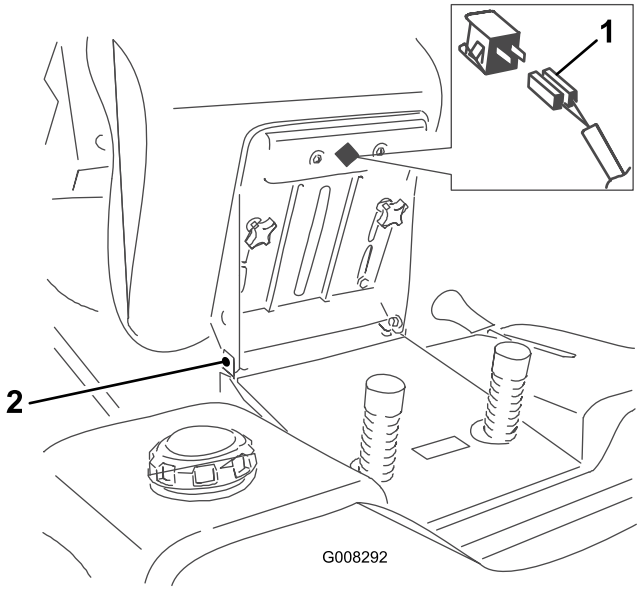

Figure 2

1. Safety switch
2. Bolt and washers

4. Ensure that the safety switch is connected to the seat (Figure 2).

3

Attaching the Trailer Hitch

Parts needed for this procedure:

1	Trailer Hitch
2	Bolts
2	Nuts

Procedure

1. Line up the holes in the trailer hitch with the holes in the machine frame.
2. Attach the hitch with two bolts and nuts (Figure 3).

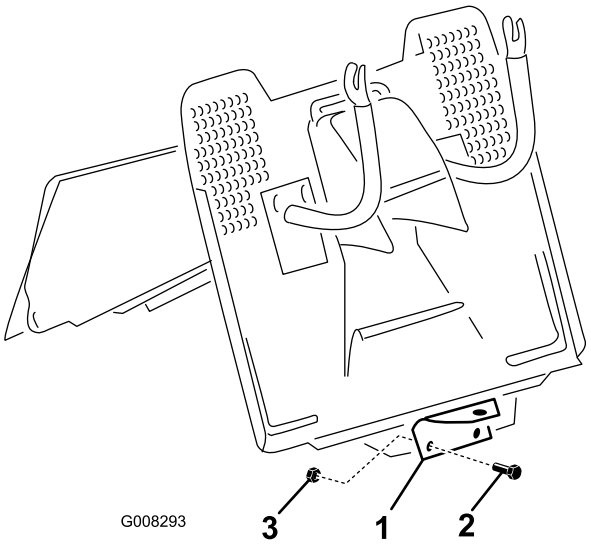

Figure 3

1. Trailer hitch
2. Bolt
3. Nut

4

Assembling the Grass Collector

Parts needed for this procedure:

1	Collector Cover
1	Grass Collector—Partially Assembled
1	Grass Bag
1	Fastener Package
1	Arrow Decal

Procedure

1. Tilt the front tube of the partially assembled collector.
2. Align the upper holes with the holes on the upper tube. Loosely fasten the tubes together with the upper bolts (Figure 4).

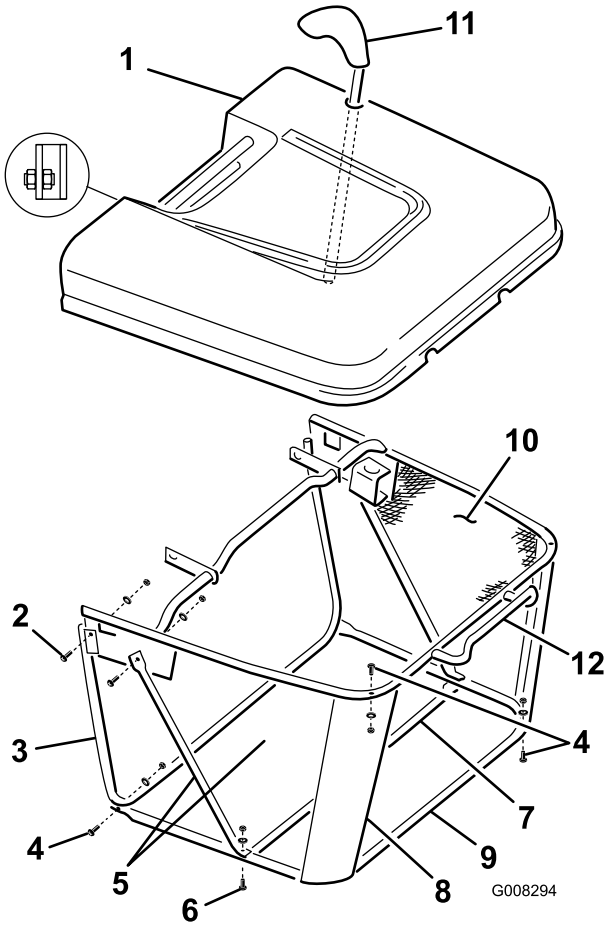

Figure 4

1. Cover
2. Upper bolts
3. Front tube
4. M5 bolts and nuts
5. Left and right supports
6. Screws
7. Lower brace
8. Corner upports
9. Bottom tube
10. Bag
11. Dumping lever
12. Rear handle

3. Place the collector on the rear machine supports (refer to the *Operator's Manual*) and align the collector frame with the machine fenders.
4. Tighten the upper bolts (Figure 4).
5. Stretch the bag and put it over the rear handle (Figure 4).
6. Insert the bottom tube into the bag (Figure 4).
7. Insert the corner supports under the top tube.
8. Fasten the corner supports to the top and bottom tubes using the M5 bolts and nuts from under the collector cover (Figure 4).
9. Fasten the bottom tube to the front tube with M5 bolts and nuts (Figure 4).
10. Tilt the left and right supports rearward.
11. Place the lower brace on the outside of the bag and secure it to the left and right supports with the screws (Figure 4).
12. Place the cover on the grass collector.
13. Align the cover with the rear fender by adjusting the rear machine supports until there is a proper seal between the cover and the collector.
14. Tighten the rear machine support bolts.
15. Remove the grass collector from the machine.
16. Tighten all screws securely.
17. Use the plastic extrusions on the bag edges to fix the bag to the frame tube.
18. Insert the dumping lever through the hole of the cover and secure it with the M5 x 12 screw and M5 nut (inside the tube) (Figure 4).
19. Install the grass collector to the machine (refer to the *Operator's Manual*).
20. When the grass collector is properly positioned, place the arrow decal directly opposite the arrow symbol on the rear of the machine.

5

Checking the Oil Level

No Parts Required

Procedure

The machine comes from the factory with oil in the engine crankcase; however, it may be necessary to add oil. Refer to the *Operator's Manual* for oil type, viscosity, and crankcase capacity. Add only enough oil to raise the level to the Full mark on the dipstick.

6

Activating the Battery

No Parts Required

Procedure

1. Remove the battery from the machine; refer to the *Operator's Manual*.
2. Remove the filler caps from the top of the battery.

Battery electrolyte contains sulfuric acid that is poisonous (if consumed) and can severely burn you.

- **Do not drink electrolyte.**
- **Avoid contact with skin, eyes or clothing.**
- **Wear safety glasses to shield your eyes and rubber gloves to protect your hands.**
- **Fill the battery where clean water is available for flushing the skin.**
- **Follow all instructions and comply with all safety messages on the electrolyte container.**

3. Slowly pour electrolyte into each cell until the level is up to the lower part of the tube.
4. Leave the filler caps off and connect a 3- to 4-amp battery charger to the battery posts.
5. Charge the battery at a rate of 2 amperes or less for 4 hours (12 volts). **Do not overcharge the battery.** Install the filler caps after the battery is fully charged.

Charging the battery produces gasses that can explode.

Never smoke near the battery and keep sparks and flames away from the battery.

6. Install the battery in the chassis; refer to the *Operator's Manual*.

7

Filling the Fuel Tank

No Parts Required

Procedure

Add fuel to the fuel tank; refer to the *Operator's Manual*.

8

Checking the Tire Pressure

No Parts Required

Procedure

Check front and rear tires for proper inflation; refer to the *Operator's Manual* for the recommended inflation pressure.

9

Lubricating the machine

No Parts Required

Procedure

Ensure that all of the necessary points on the machine are lubricated; refer to the *Operator's Manual*.

10

Inserting the Keys into the Switches

Parts needed for this procedure:

2	Keys

Procedure

The Key Choice switch is located on the right side of seat bracket below the seat.

11

Checking the Safety System

No Parts Required

Procedure

Refer to the *Operator's Manual*.

12

Test Driving the Machine

Parts needed for this procedure:

1	Operator's Manual
1	Engine Operator's Manual

Procedure

Ensure that all electrical and mechanical systems are operating properly. Refer to the *Operator's Manual* for how to properly operate the controls.

13

CE Conformance

Parts needed for this procedure:

1	Certificate of Conformance

Notes:



Count on it.