Form No. 3355-525 Rev E

522 Power Throw® Snowthrower

Model No. 38605—Serial No. 270000001 and Up

Operator's Manual

Introduction

Read this information carefully to learn how to operate and maintain your product properly and to avoid injury and product damage. You are responsible for operating the product properly and safely.

You may contact Toro directly at www.Toro.com for product and accessory information, help finding a dealer, or to register your product.

Whenever you need service, genuine Toro parts, or additional information, contact an Authorized Service Dealer or Toro Customer Service and have the model and serial numbers of your product ready. Figure 1 identifies the location of the model and serial numbers on the product. Write the numbers in the space provided.

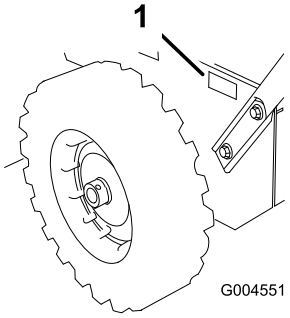

Figure 1

1. Model and serial number location

Model No. _____

Serial No. _____

This manual identifies potential hazards and has safety messages identified by the safety alert symbol (Figure 2), which signals a hazard that may cause serious injury or death if you do not follow the recommended precautions.

Figure 2

1. Safety alert symbol

This manual uses 2 words to highlight information. **Important** calls attention to special mechanical information and **Note** emphasizes general information worthy of special attention.

Replacement Engine Owner's Manuals may be ordered through the engine manufacturer.

© 2009—The Toro® Company
8111 Lyndale Avenue South
Bloomington, MN 55420

Register at www.Toro.com.

Original Instructions (EN)
Printed in the USA
All Rights Reserved

Safety

Before Operating

- **Read and understand the contents of this manual before operating the snowthrower.**
- **Become familiar with all controls and know how to stop the engine quickly.**

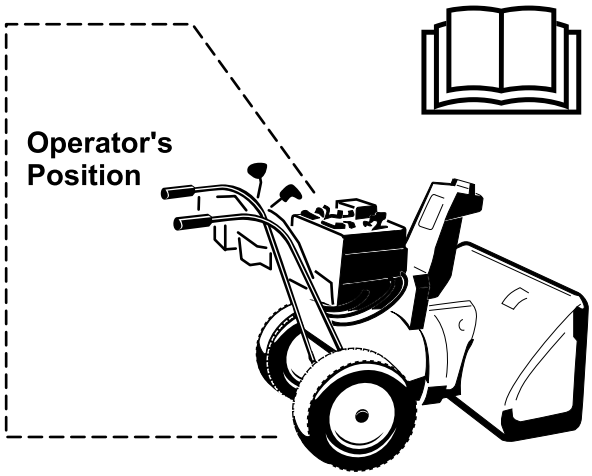

Caution: Improper use may result in loss of fingers, hands, or feet.

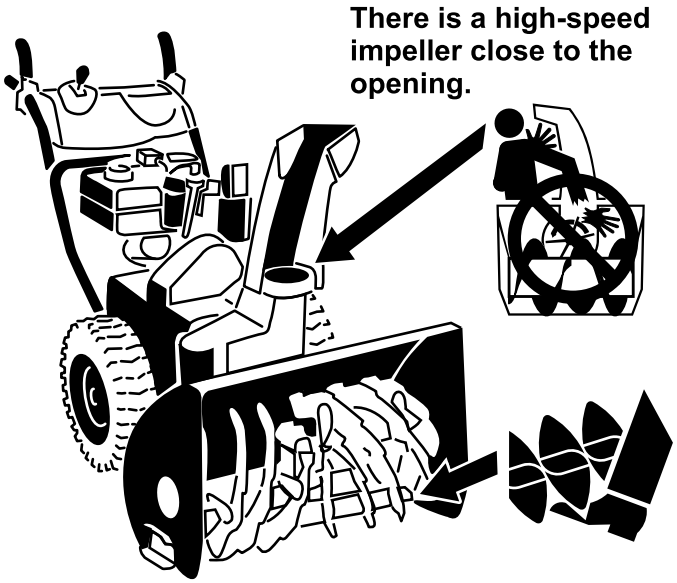

This snowthrower meets or exceeds the B71.3 specifications of the American National Standards Institute in effect at the time of production.

Read and understand the contents of this manual before you start the engine.

⚠This is the safety alert symbol. It is used to alert you to potential personal injury hazards. Obey all safety messages that follow this symbol to avoid possible injury or death.

Improperly using or maintaining this snowthrower could result in injury or death. To reduce this potential, comply with the following safety instructions.

This snow thrower is capable of amputating hands and feet and of throwing objects. Failure to observe the following safety instructions could result in serious injury.

Training

- Read, understand and follow all instructions on the machine and in the manual(s) before operating this unit. Be thoroughly familiar with the controls and the proper use of the equipment. Know how to stop the unit and disengage the controls quickly.
- Never allow children to operate the equipment. Never allow adults to operate the equipment without proper instruction.
- Keep the area of operation clear of all persons, particularly small children.
- Exercise caution to avoid slipping or falling, especially when operating the snow thrower in reverse.

Preparation

- Thoroughly inspect the area where the equipment is to be used and remove all doormats, sleds, boards, wires, and other foreign objects.
- Disengage all clutches and shift into neutral before starting the engine.
- Do not operate the equipment without wearing adequate winter garments. Avoid loose fitting clothing that can get caught in moving parts. Wear footwear that will improve footing on slippery surfaces.
- Handle fuel with care; it is highly flammable.
  - Use an approved fuel container.
  - Never add fuel to a running engine or hot engine.
  - Fill fuel tank outdoors with extreme care. Never fill fuel tank indoors.

- Never fill containers inside a vehicle or on a truck or trailer bed with a plastic liner. Always place containers on the ground, away from your vehicle, before filling.
- When practical, remove gas-powered equipment from the truck or trailer and refuel it on the ground. If this is not possible, then refuel such equipment on a trailer with a portable container, rather than from a gasoline dispenser nozzle.
- Keep the nozzle in contact with the rim of the fuel tank or container opening at all times, until refueling is complete. Do not use a nozzle lock-open device.
- Replace gasoline cap securely and wipe up spilled fuel.
- If fuel is spilled on clothing, change clothing immediately.

- Use extension cords and receptacles as specified by the manufacturer for all units with electric starting motors.
- Adjust the collector housing height to clear gravel or crushed rock surface.
- Never attempt to make any adjustments while the engine is running (except when specifically recommended by manufacturer).
- Always wear safety glasses or eye shields during operation or while performing an adjustment or repair to protect eyes from foreign objects that may be thrown from the machine.

Operation

- Do not put hands or feet near or under rotating parts. Keep clear of the discharge opening at all times.
- Exercise extreme caution when operating on or crossing gravel drives, walks, or roads. Stay alert for hidden hazards or traffic.
- After striking a foreign object, stop the engine, remove the wire from the spark plug, thoroughly inspect the snow thrower for any damage, and repair the damage before restarting and operating the snow thrower.
- If the unit should start to vibrate abnormally, stop the engine and check immediately for the cause. Vibration is generally a warning of trouble.
- Stop the engine whenever you leave the operating position, before unclogging the auger/impeller housing or discharge chute, and when making any repairs, adjustments or inspections.
- When cleaning, repairing or inspecting the snow thrower, stop the engine and make certain the auger/impeller and all moving parts have stopped. Disconnect the spark plug wire and keep the wire away from the plug to prevent someone from accidentally starting the engine.
- Do not run the engine indoors, except when starting the engine and for transporting the snow thrower in or out of the building. Open the outside doors; exhaust fumes are dangerous.
- Exercise extreme caution when operating on slopes.
- Never operate the snow thrower without proper guards, and other safety protective devices in place and working.
- Never direct the discharge toward people or areas where property damage can occur. Keep children and others away.
- Do not overload the machine capacity by attempting to clear snow at too fast a rate.
- Never operate the machine at high transport speeds on slippery surfaces. Look behind and use care when operating in reverse.
- Disengage power to the auger/impeller when snow thrower is transported or not in use.
- Use only attachments and accessories approved by the manufacturer of the snow thrower (such as wheel weights, counterweights, or cabs).
- Never operate the snow thrower without good visibility or light. Always be sure of your footing, and keep a firm hold on the handles. Walk; never run.
- Never touch a hot engine or muffler.

Clearing a Clogged Discharge Chute

Hand contact with the rotating rotor blades inside the discharge chute is the most common cause of injury associated with snow throwers. Never use your hand to clean out the discharge chute.

To clear the chute:

- **Shut the engine off!**
- Wait 10 seconds to be sure the impeller blades have stopped rotating.
- Always use a clean-out tool, not your hands.

Maintenance and Storage

- Check all fasteners at frequent intervals for proper tightness to be sure the equipment is in safe working condition.
- Never store the machine with fuel in the fuel tank inside a building where ignition sources are present, such as hot water heaters, space heaters, or clothes dryers. Allow the engine to cool before storing in any enclosure.
- Always refer to the *Operator's Manual* for important details if the snow thrower is to be stored for an extended period.
- Maintain or replace safety and instruction labels, as necessary.
- Run the machine a few minutes after throwing snow to prevent freeze-up of the auger/impeller blades.

Toro Snowthrower Safety

The following list contains safety information specific to Toro products or other safety information that you must know.

- **Rotating auger/impeller can cut off or injure fingers or hands.** Stay behind the handles and away from the discharge opening while operating the snow thrower. **Keep your face, hands, feet, and any other part of your body or clothing away from moving or rotating parts.**
- Before adjusting, cleaning, inspecting, troubleshooting, or repairing the snow thrower, **stop the engine, remove the ignition key, and wait for all moving parts to stop. Disconnect the wire from the spark plug and keep it away from the spark plug to prevent someone from accidentally starting the engine.**
- **Before** leaving the operating position, stop the engine, remove the ignition key, and wait for all moving parts to stop.
- To unclog the discharge chute, stay in the operating position and release the left hand (traction) lever. While running the auger/impeller, push down on the handles to raise the front of the snow thrower a few inches (centimeters) off the pavement. Then lift the handles quickly to bump the front of the snow thrower on the pavement. Repeat if necessary until a stream of snow comes out the discharge chute.
- If you cannot unclog the discharge chute by bumping the front of the snow thrower, **stop the engine, wait for all moving parts to stop, and use the clean-out tool; never use your hand.**
- If a shield, safety device, or decal is damaged, illegible, or lost, repair or replace it before beginning operation.
- **Do not** smoke while handling gasoline.
- **Do not** use the snow thrower on a roof.
- Do not touch the engine while it is running or soon after it has stopped because the engine may be hot enough to cause a burn.
- Perform only those maintenance instructions described in this manual. Before performing any maintenance, service, or adjustment, stop the engine, remove the ignition key, and disconnect the wire from the spark plug. If major repairs are ever needed, contact an Authorized Service Dealer.
- Do not change the governor settings on the engine.
- When storing the snow thrower for more than 30 days, drain the fuel from the fuel tank to prevent a potential hazard. Store fuel in an approved fuel container. Remove the key from the ignition switch before storing the snow thrower.
- Purchase only genuine Toro replacement parts and accessories.

Safety and Instructional Decals

Important: **Safety and instruction decals are located near areas of potential danger. Replace damaged decals.**

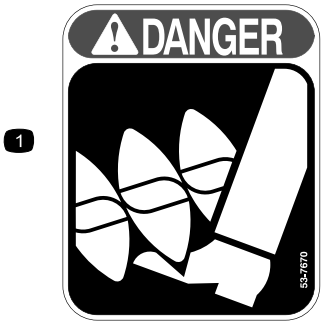

53-7670

1. Cutting/dismemberment of foot, auger

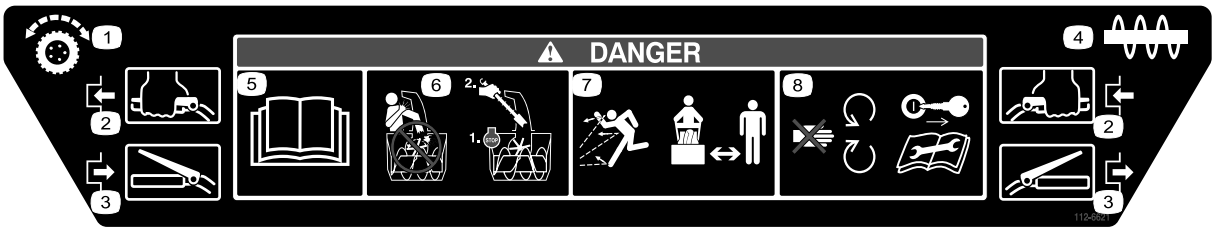

112-6621

1. Wheel drive
2. Engage
3. Disengage
4. Auger drive
5. Read the *Operator's Manual.*
6. Do not place your hand in the chute; stop the engine before leaving the operator's position, use the tool to clear the chute.
7. Thrown objects, keep bystanders a safe distance from the snowthrower.
8. Keep away from moving parts, remove the ignition key and read the instructions before servicing or performing maintenance.

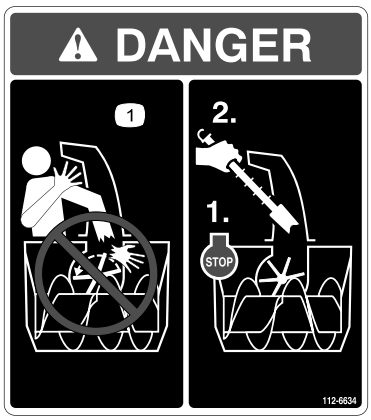

112-6634

1. Do not place your hand in the chute; stop the engine before leaving the operator's position, use the tool clear the chute.

112-6636

1. Forward drive speed settings
2. Speed selector
3. Reverse drive speed setting

---

1. Warning—hot surface, do not touch

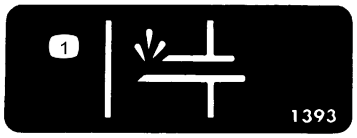

Tecumseh Part No. 36501

1. Primer

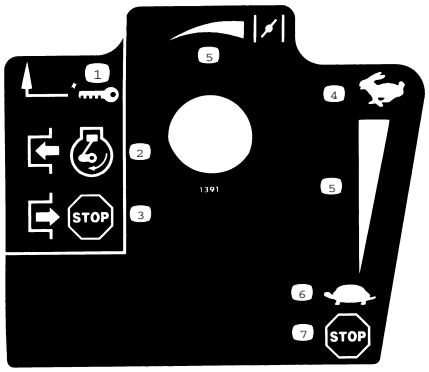

Tecumseh Part No. 35077

1. Key ignition
2. Engage to start the engine
3. Disengage to stop the engine
4. Fast
5. Increasing scale
6. Slow
7. Stop the engine

Setup

Loose Parts

Use the chart below to verify that all parts have been shipped.

Procedure	Description	Qty.	Use
1.	Handle Bolts Belleville washers Flange nut	1 4 4 1	Install the handle.
2.	Speed selector rod Cotter pin Flat washer	1 1 1	Install the speed selector rod.
3.	Flange locknut	1	Install the traction rod.
4.	Clevis pin Cotter pin	1 1	Install the auger/impeller drive control linkage.
5.	Chute control rod assembly (rod and bracket, worm gear, and bracket) Carriage bolt Belleville washer Hex head bolt Locknut	1 1 1 1 2	Install the chute control rod.
6.	No parts required	–	Fill the engine with oil.
7.	No parts required	–	Check the tire pressure.
8.	No parts required	–	Check the skids and scraper.

1. Installing the Handle

1	Handle
4	Bolts
4	Belleville washers
1	Flange nut

Procedure

1. Remove the tie straps that secure the control rods to the handle.
2. Remove the axle pins from both wheels and slide the wheels outward on the axle approximately 1 inch (3 cm) (Figure 3).

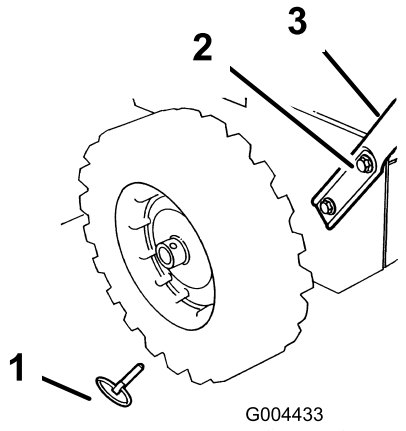

Figure 3

1. Axle pin (2)
2. Cap screw and curved washer (4)
3. Handle

3. Thread a flange nut (not the flange locknut) with the flange down onto the traction rod attached to the left side of the handle (Figure 4).

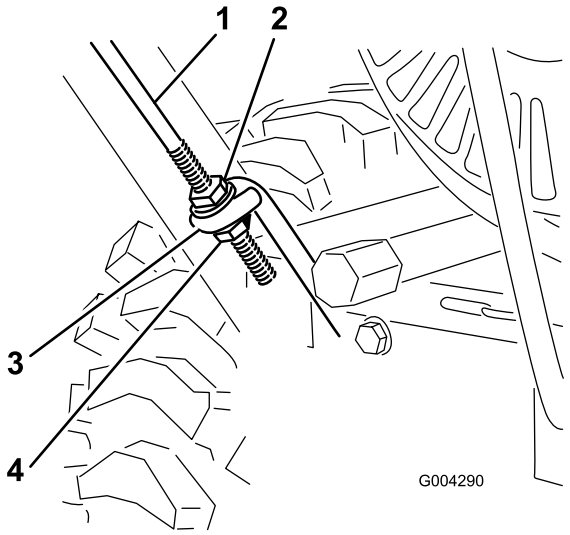

Figure 4

1. Traction rod
2. Flange nut
3. Lower traction rod loop
4. Flange locknut

4. Position the left side of the handle against the side of the snowthrower and insert the end of the traction rod through the lower traction rod loop Figure 4).
5. Align the holes in the left side of the handle with the holes in the left side plate, and secure the handle with 2 cap screws and Belleville washers until they are finger tight (Figure 3).

   Note: The concave side of the Belleville washer goes against the outside of the handle.
6. Align the holes in the right side of the handle with the holes in the right side plate, and secure the handle with 2 cap screws and Belleville washers until they are finger tight.
7. Ensure that the handles are at the same height, then tighten the handle fasteners securely.
8. Slide the wheels outward and insert each axle pin through the hole in each wheel hub and through the **outer** hole of the axle (Figure 5).

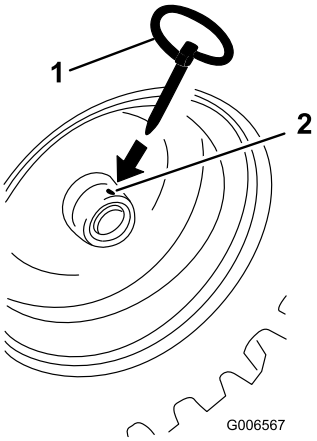

Figure 5

1. Axle pin
2. Hole in wheel hub and outer axle hole aligned

Note: If you install tire chains (optional), you must install the axle pins through the **outer** axle holes.

2. Installing the Speed Selector Rod

1	Speed selector rod
1	Cotter pin
1	Flat washer

Procedure

1. Pull the speed selector arm (Figure 6) to the most outward position.

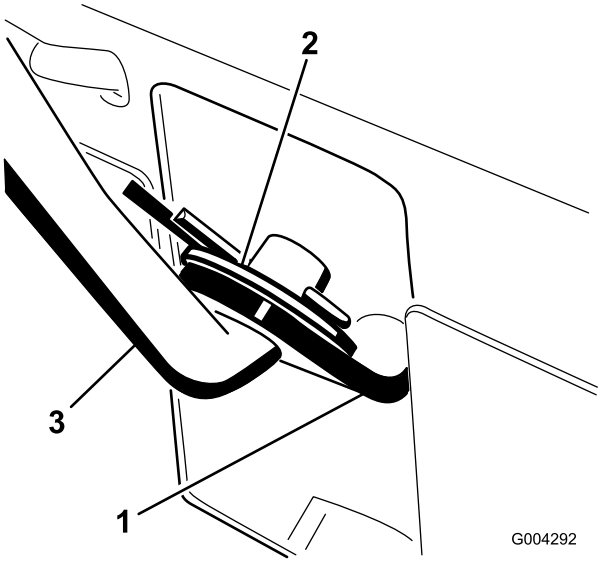

Figure 6

1. Speed selector arm
2. Flat washer and cotter pin
3. Speed selector rod

2. Move the speed selector lever (Figure 13) on the control panel to the R (Reverse) position.
3. Install the speed selector rod into the speed selector arm, add a flat washer on the selector rod, and secure it with a cotter pin (Figure 6).

3. Installing the Traction Rod

1	Flange locknut

Procedure

1. Thread the flange locknut (flange side up) onto the bottom of the traction control rod, below the loop in the lower traction rod (Figure 4).
2. Adjust the 2 flange nuts up or down on the traction rod until the distance between the top of the handgrip and the bottom of the traction control lever is approximately 4-1/2 inches (11.4 cm) as shown in Figure 7.

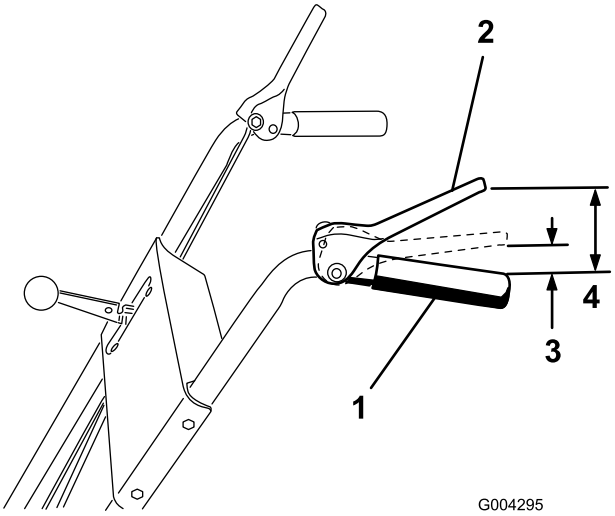

Figure 7

1. Handgrip
2. Traction control lever
3. 1 to 2 inches (3 to 5 cm)
4. 4-1/2 inches (11.4 cm)

3. Tighten the 2 flange nuts until they are finger tight.
4. Move the speed selector lever (Figure 13) into third gear.

   Note: If the speed selector lever does not move into third gear, adjust the speed selector before continuing. Refer to Adjusting the Speed Selector in Maintenance.
5. Slowly pull the snowthrower backward while slowly pressing the traction control lever toward the handgrip.

   Note: The adjustment is correct when the wheels stop rolling backward and the distance between the top of the handgrip and the bottom of the traction control lever is 1 to 2 inches (3 to 5 cm) as shown in Figure 7.
6. Adjust the 2 flange nuts, if necessary, to obtain the proper distance between the top of the handgrip and the bottom of the traction control lever.
7. Tighten the flange nuts securely.

4. Installing the Auger/ Impeller Drive Control Linkage

1	Clevis pin
1	Cotter pin

Procedure

1. Loosen the jam nut above the clevis on the upper control rod (Figure 8).

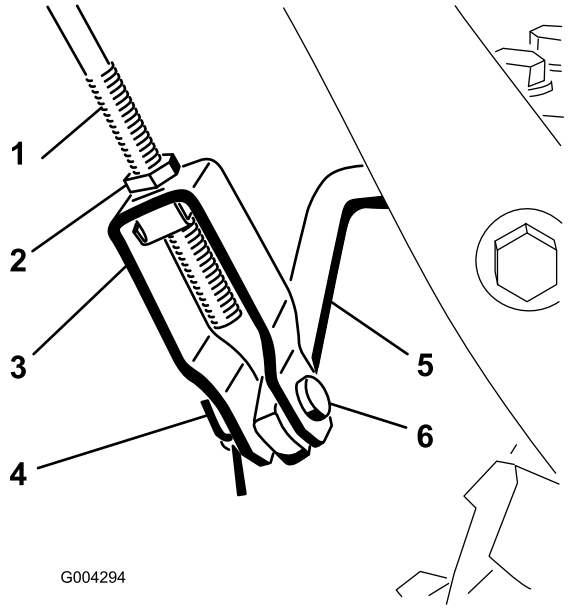

Figure 8

1. Upper control rod
2. Jam nut
3. Clevis
4. Cotter pin
5. Lower control rod
6. Clevis pin

2. Align the holes in the clevis and the lower control rod and insert the clevis pin (Figure 8).
3. Check the distance between the top of the handgrip and the bottom of the auger/impeller drive control lever (Figure 9).

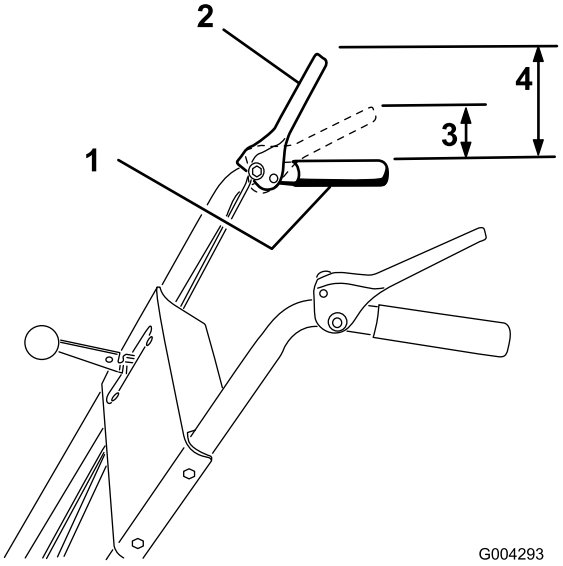

Figure 9

1. Handgrip
2. Auger/impeller control lever
3. 1 to 2 inches (3 to 5 cm)
4. 5 inches (12.7 cm)

Note: The distance should be approximately 5 inches (12.7 cm).

4. Press the auger/impeller drive control lever slowly toward the handgrip.

   Note: The amount of force needed to compress the lever increases noticeably when you remove the slack from the auger/impeller drive belt (approximately 1/2 of the lever movement). The adjustment is correct when the force begins to increase and the distance between the top of the handgrip and the bottom of the auger/impeller drive control lever is 1 to 2 inches (3 to 5 cm) as shown in Figure 9.

   Note: If the force does not noticeably increase, remove the belt cover (refer to step 2 of Replacing the Traction Drive Belt in Maintenance) and measure 2 inches (5 cm) above the handgrip at the point where you remove the slack from the auger/impeller drive belt.

5. To adjust the distance:
   A. Remove the clevis pin.
   B. Loosen the jam nut.
   C. Thread the clevis up or down to increase or decrease the distance between the top of the handgrip and the bottom of the auger/impeller drive control lever (Figure 8).
6. When the adjustment is correct, install the clevis pin and secure it in place with the cotter pin (Figure 8).
7. Tighten the jam nut to secure the clevis (Figure 8).

5. Installing the Chute Control Rod

1	Chute control rod assembly (rod and bracket, worm gear, and bracket)
1	Carriage bolt
1	Belleville washer
1	Hex head bolt
2	Locknut

Procedure

1. Assemble the chute control bracket and rod to the left side of the handle with the bolt and the locknut as shown in Figure 10.

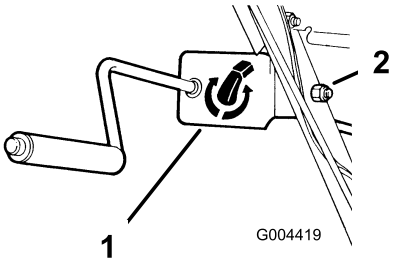

Figure 10

1. Chute control bracket and rod
2. Hex head bolt and locknut

Note: Do not tighten the locknut.

2. Apply No. 2 general purpose grease to the worm gear (Figure 11).

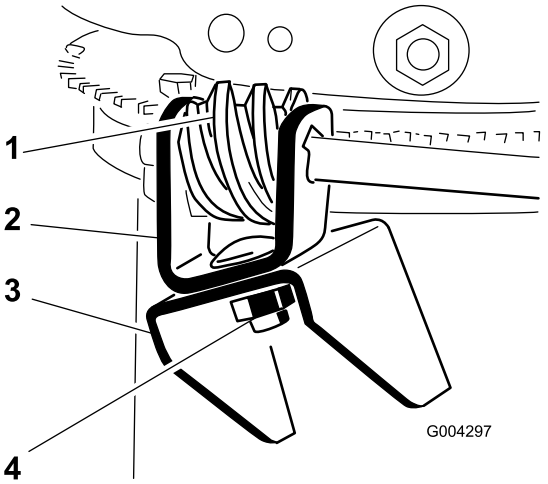

Figure 11

1. Worm gear
2. Bracket
3. Mounting flange
4. Carriage bolt, Belleville washer, and locknut

3. Loosely mount the worm gear and the bracket to the mounting flange with a bolt, a Belleville washer, and a locknut as shown in Figure 11.
4. Slide the worm gear into the teeth of the chute retaining ring and tighten the locknut (Figure 11).
5. Tighten the locknut that secures the chute control bracket (Figure 10).
6. Check the operation of the chute control rod, and move the worm gear slightly outward if it binds.

6. Filling the Engine with Oil

Procedure

Your snowthrower comes with 21 oz. (0.62 l) of oil in the engine.

Note: Before starting the engine, check the oil level and add oil if necessary.

Max. fill: 21 oz. (0.62 l), type: automotive detergent oil with an API service classification of SF, SG, SH, SJ, SL, or higher.

- For temperatures above 32°F (0°C), use SAE 30.
- For temperatures between 0°F and 32°F (-18°C to 0°C), use SAE 5W30 or SAE 10.
- For air temperatures below 0°F (-18°C), use SAE 0W30.

1. Move the snowthrower to a level surface to ensure an accurate oil level reading.
2. Clean around the dipstick (Figure 12).

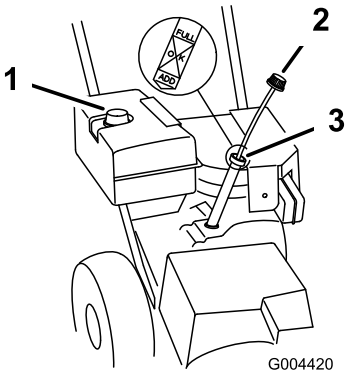

Figure 12

1. Fuel tank cap
2. Dipstick
3. Filler hole

3. Remove the dipstick by rotating the cap counterclockwise and pulling it out.
4. Slowly pour about 3/4 of the crankcase capacity of oil into the crankcase.
5. Wipe the dipstick clean with a clean cloth.
6. Install the dipstick into the filler neck, then remove it.

   Note: To ensure an accurate oil level reading, you must fully install the dipstick.

7. Read the oil level on the dipstick.
8. If the oil level is below the Add mark on the dipstick, slowly pour only enough oil into the filler hole to raise the oil level to the Full mark on the dipstick.

   Important: Do not overfill the crankcase with oil and run the engine; engine damage will result. Drain the excess oil until the oil level on the dipstick reads Full.

9. Insert the dipstick into the filler neck and rotate the cap clockwise until it is tight.

7. Checking the Tire Pressure

Procedure

The tires are overinflated at the factory for shipping. Reduce the pressure equally in both tires to between 12 and 15 psi (82 and 103 kPa).

8. Checking the Skids and Scraper

Procedure

Refer to Checking and Adjusting the Skids and Scraper in Maintenance.

Product Overview

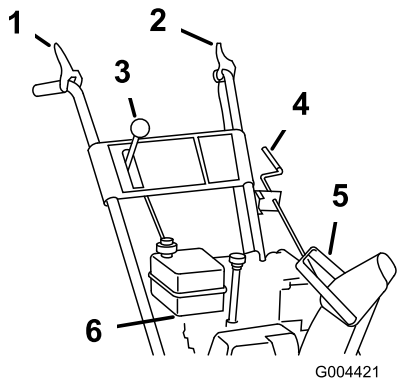

Figure 13

1. Auger/impeller drive control lever
2. Traction control lever
3. Speed selector lever
4. Discharge chute control
5. Chute deflector handle
6. Fuel shutoff valve

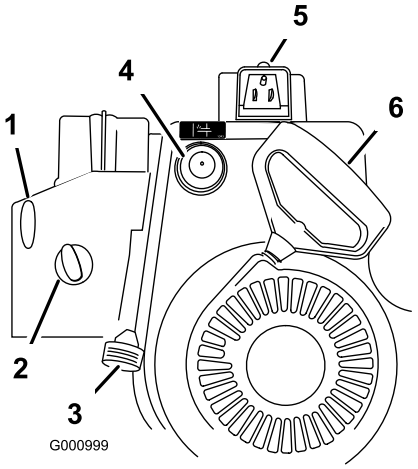

Figure 14

1. Ignition switch
2. Choke
3. Throttle
4. Primer
5. Electric starter
6. Recoil starter

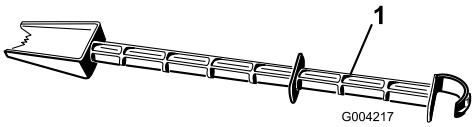

Figure 15

1. Snow clean-out tool (attached to the top of the auger housing)

Controls

- **Auger/Impeller Drive Control Lever**—To engage both the auger and impeller, press the lever against the right handgrip. To disengage, release the lever.
- **Traction Control Lever**—To engage the traction (wheel drive), press the lever against the left handgrip. To stop the traction, release the lever.
- **Speed Selector Lever**—This control has 4 positions: 3 forward speeds and 1 reverse. To change speeds, move the speed selector lever to the desired position. The lever locks in a notch at each speed selection.

  Note: Before shifting gears into or out of reverse, you must release the traction control lever. You may shift between any of the forward speeds without releasing the traction control lever.
- **Discharge Chute Control**—Rotate the discharge chute control clockwise to move the discharge chute to the left; counterclockwise to move the chute to the right.
- **Chute Deflector Handle**—Move the deflector handle forward to move the snow stream down; move it rearward to move the snow stream up.
- **Fuel shutoff Valve**—Close the valve by rotating clockwise. Open the valve by rotating it counterclockwise. Close the valve when you do not use the snowthrower.
- **Ignition Switch**—Insert the ignition key before starting the engine. To stop the engine, remove the key.
- **Choke**—Move the choke to the Full position to start a cold engine. As engine warms up, gradually move the choke to the Off position.
- **Throttle Lever**—Move the throttle lever upward to increase the engine speed; move it downward to decrease the engine speed. Move the throttle lever to the Stop position to stop the engine.
- **Primer**—Press the primer to pump a small amount of gasoline into the engine for improved cold-weather starting.
- **Electric Starter**—The electric starter is on the top of the engine. To start the snowthrower, connect the electric starter to an electric power source with an approved extension cord and press the starter button.
- **Recoil Starter**—The recoil starter is on the back side of the engine. Pull the recoil starter to start the engine.
- **Snow Clean-out Tool**—The snow clean-out tool is on the top of the auger housing. Use this tool to unclog the discharge chute when it becomes clogged with snow.

Operation

Note: Determine the left and right sides of the machine from the normal operating position.

Freewheeling or Using the Self-propel Drive

You can operate the snowthrower with the self-propel feature engaged or disengaged (freewheeling).

To freewheel, slide the wheels inward and insert the axle pins through the outer axle holes, but not through the wheel hubs (Figure 16).

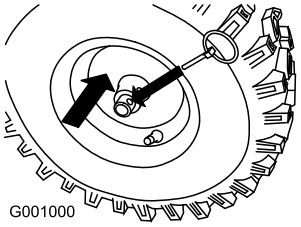

Figure 16

To self-propel, slide the wheels outward and insert the axle pins through the holes in the wheel hubs and the outer axle holes (Figure 17).

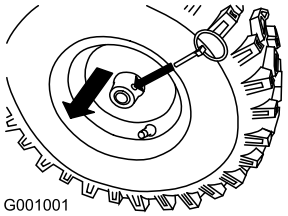

Figure 17

Removing the Carburetor Heater Box

If you operate the engine when the air temperature is above 40°F (4°C), remove the carburetor heater box (Figure 18).

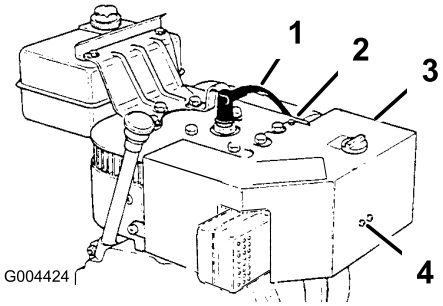

Figure 18

1. Spark-plug wire
2. Self-tapping screw
3. Carburetor heater box
4. Screws

1. Disconnect the wire from the spark plug and ensure that the wire does not contact the plug (Figure 18).
2. Remove the key from the ignition (Figure 14).
3. Pull the choke knob off (Figure 14).
4. Remove the fasteners that secure the carburetor heater box in place (Figure 18).

   Note: Install these fasteners in their holes for safe keeping.
5. Lift the carburetor heater box up and away from the engine.
6. Disconnect the green ground wire clip under the throttle (Figure 19).

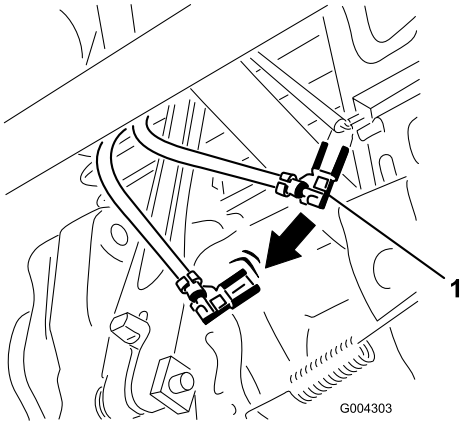

Figure 19

1. Green ground wire clip

7. Install the choke knob.
8. Insert the ignition key.
9. Connect the wire to the spark plug.

   Important: **Use the carburetor heater box as a reference for the choke and throttle positions.**

Installing the Carburetor Heater Box

To install the carburetor heater box, reverse the steps given in Removing the Carburetor Heater Box. Remove the fasteners from their holes before installing the carburetor heater box.

Filling the Fuel Tank

Gasoline is extremely flammable and explosive. A fire or explosion from gasoline can burn you and others.

- **To prevent a static charge from igniting the gasoline, place the container and/or snowthrower on the ground before filling, not in a vehicle or on an object.**
- **Fill the tank outdoors when the engine is cold. Wipe up spills.**
- **Do not handle gasoline when smoking or around an open flame or sparks.**
- **Store gasoline in an approved fuel container, out of the reach of children.**

Fill the fuel tank with fresh unleaded regular gasoline from a major name-brand service station.

Important: To reduce starting problems, add fuel stabilizer to the fuel all season, mixing it with gasoline less than 30 days old. *Do not add oil to the gasoline.*

1. Clean around the fuel tank cap (Figure 12).
2. Remove the fuel tank cap.
3. Fill the fuel tank with unleaded gasoline to within 1/4 to 1/2 (6 to 13 mm) from the top of the tank. **Do not fill into the filler neck.**

   Important: Do not fill the fuel tank more than 1/4 inch (6 mm) from the top of the tank because the gasoline must have room to expand.
4. Install the fuel tank cap and wipe up any spilled gasoline.

Starting the Engine

1. Connect the spark plug wire (Figure 20).

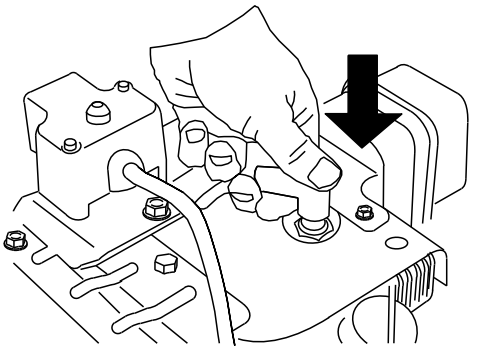

Figure 20

2. Move the throttle to the Fast position (Figure 21).

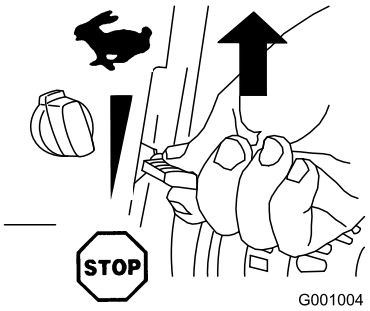

Figure 21

3. Rotate the fuel shutoff valve counterclockwise to open it (Figure 22).

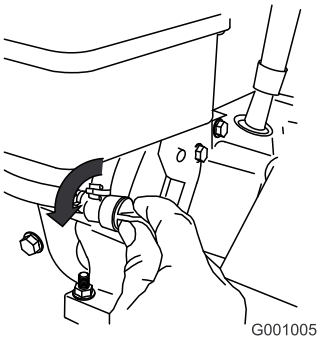

Figure 22

4. Rotate the choke to the On position (Figure 23).

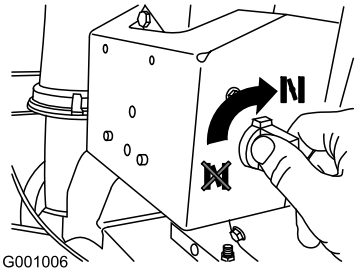

Figure 23

5. Insert the ignition key (Figure 24).

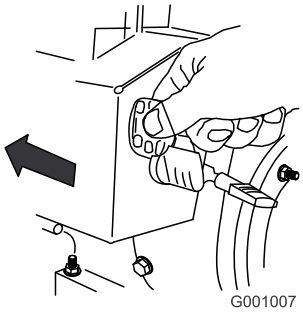

Figure 24

6. Firmly push in the primer 3 times with your thumb, holding the primer in for a second before releasing it each time (Figure 25).

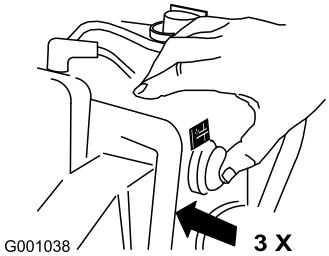

Figure 25

Note: Take your glove off when you push in the primer so that air cannot escape from the primer hole.

Note: Priming excessively may flood the engine and prevent it from starting.

7. Start the snowthrower using the recoil starter or the electric starter (Figure 26).

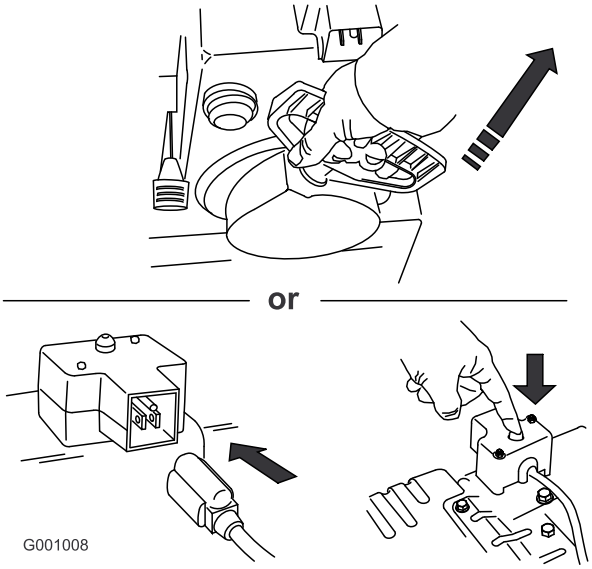

Figure 26

Important: To prevent damaging the electric starter, run it no more than 10 times at intervals of 5 seconds on, then 5 seconds off. If the engine does not start after this series of attempts, allow the starter to cool for at least 40 minutes before trying to start it again. If the engine still does not start, take the snowthrower to an Authorized Service Dealer for service.

8. Disconnect the cord from the electric starter and the outlet.

9. When the engine starts, set the choke to the 3/4 position. As the engine warms up, set the choke to the 1/2 position. When the engine is warm, set the choke to the Off position.

If you leave the snowthrower plugged into a power outlet, someone can inadvertently start the snowthrower and injure people or damage property.

Unplug the power cord whenever you are not starting the snowthrower.

Stopping the Engine

1. Engage the auger to remove any remaining snow from inside the housing.
2. Run the engine for a few minutes to dry off any accumulated moisture.
3. Release the auger/impeller drive control lever and the traction control lever (Figure 13).
4. Stop the engine by doing one of the following:
   A. Move the throttle lever to the Slow position, and remove the ignition key.
   B. Move the throttle lever to the Stop position.
5. Close the fuel shutoff valve (Figure 13).
6. Pull the recoil starter with a rapid, continuous, full-arm stroke 3 or 4 times. This helps prevent the recoil starter from freezing up.
7. Wait for all moving parts to stop before leaving the operating position.

Unclogging the Discharge Chute

If the auger/impeller is running but there is no snow coming out of the discharge chute, the discharge chute may be clogged.

If the discharge chute becomes clogged, **stop the engine, wait for all moving parts to stop, and use the clean-out tool— never use your hand.**

Preventing Freeze-up

- In snowy and cold conditions, some controls and moving parts may freeze. **Do not use excessive force when trying to operate frozen controls.** If you have difficulty operating any control or part, start the engine and let it run for a few minutes.
- After using the snowthrower, let the engine run for a few minutes to prevent moving parts from freezing. Engage the auger/impeller to clear any remaining snow from inside the housing. Rotate the discharge chute control to prevent it from freezing. Stop the engine, wait for all moving parts to stop, and remove all ice and snow from the snowthrower.
- With the engine off, pull the recoil starter handle several times to prevent the recoil starter from freezing up.

Operating Tips

When the snowthrower is in operation, the impeller and auger can rotate and cut off or injure hands and feet.

- **Before adjusting, cleaning, inspecting, troubleshooting, or repairing the snowthrower, stop the engine and wait for all moving parts to stop. Disconnect the wire from the spark plug and keep it away from the plug to prevent someone from accidentally starting the engine.**
- **Remove an obstruction from the discharge chute; refer to Unclogging the Discharge Chute. If necessary, use the clean-out tool, not your hands, to remove an obstruction from the discharge chute.**
- **Stay behind the handles and away from the discharge opening while operating the snowthrower.**
- **Keep face, hands, feet, and any other part of your body or clothing away from concealed, moving, or rotating parts.**

The rotor blades can throw stones, toys, and other foreign objects and cause serious personal injury to the operator or to bystanders.

- **Keep the area to be cleared free of all objects that the rotor blades could pick up and throw.**
- **Keep all children and pets away from the area of operation.**

- Always set the throttle lever to the Fast position when throwing snow.
- If the engine slows down under a load or the wheels slip, shift the snowthrower into a lower gear.
- If the front of the snowthrower rides up, shift the snowthrower into a lower gear. If the front continues to ride up, lift up on the handles.

Maintenance

Note: Determine the left and right sides of the machine from the normal operating position.

Recommended Maintenance Schedule(s)

Maintenance Service Interval	Maintenance Procedure
After the first hour	• Inspect and adjust the traction drive belt. • Inspect and adjust the auger/impeller drive belt.
After the first 2 hours	• Change the engine oil.
Before each use or daily	• Check the engine oil level and add oil if necessary. • Inspect and adjust or replace the traction drive belt when necessary. • Inspect and adjust or replace the auger/impeller drive belt when necessary.
Every 20 hours	• Lubricate the snowthrower.
Every 25 hours	• Change the engine oil.
Every 100 hours	• Inspect the spark plug. Replace and/or gap it if necessary.
Yearly	• Check the skids and the scraper and adjust them if necessary. • Check the auger gearbox oil and add oil if necessary. • Change the engine oil.
Yearly or before storage	• Lubricate the snowthrower. • Drain the gasoline and run the engine to dry out the fuel tank and the carburetor at the end of the season.

Important: Refer to your engine operator's manual for additional maintenance procedures. For engine adjustments, repairs, or warranty service not covered in this manual, contact an Authorized Tecumseh Servicing Dealer.

If you leave the wire on the spark plug, someone could accidently start the engine and seriously injure you or bystanders.

Disconnect the wire from the spark plug before you do any maintenance. Set the wire aside so that it does not accidentally contact the spark plug.

Preparing for Maintenance

1. Move the snowthrower to a level surface.
2. Stop the engine and wait for all moving parts to stop.
3. Disconnect the spark plug wire (Figure 18).

Checking the Engine Oil Level

Service Interval: Before each use or daily

Each time before using the snowthrower, first ensure that the oil level is between the Add and the Full marks on the dipstick.

1. Clean around the dipstick (Figure 12).
2. Remove the dipstick by rotating the cap counterclockwise and pulling it out.
3. Wipe the dipstick clean with a clean cloth.
4. Install the dipstick into the filler neck, then remove it.

   Note: To ensure an accurate oil level reading, you must fully install the dipstick.
5. Read the oil level on the dipstick.
6. If the oil level is below the Add mark on the dipstick, slowly pour only enough oil into the filler hole to raise the oil level to the Full mark on the dipstick.

   Note: Use only a high-quality, SAE 5W-30 or SAE 10 detergent oil that has the American Petroleum Institute (API) service classification SF,

SG, SH, or SJ. For extremely cold conditions (below 0°F or -18°C), use 0W-30 detergent oil that has the American Petroleum Institute (API) service classification SF, SG, SH, or SJ.

Important: Do not overfill the crankcase with oil and run the engine; engine damage will result. Drain the excess oil until the oil level on the dipstick reads Full.

7. Insert the dipstick into the filler neck and rotate the cap clockwise until it is tight.

Adjusting the Skids and Scraper

Service Interval: Yearly

Adjust the skids and the scraper initially and then as needed to ensure that the auger does not contact the paved or gravel surface. Also, adjust them as needed to compensate for wear.

1. Move the snowthrower to a level surface.
2. Check the tire pressure in the tires. Refer to Checking the Tire Pressure in Setup.
3. Loosen the 4 flange nuts that secure both skids to the auger side plates (Figure 27) until the skids slide up and down easily.

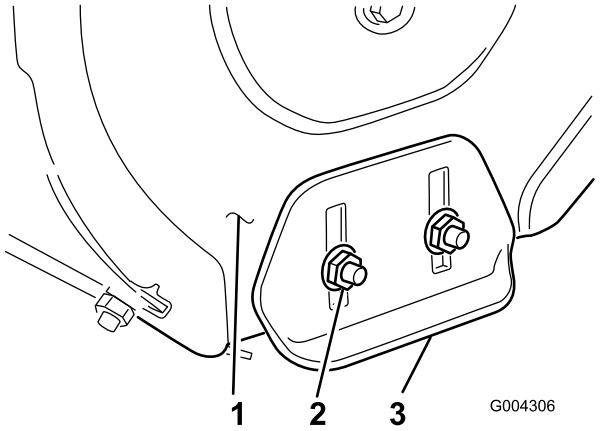

Figure 27

1. Auger side plate (2)
2. Flange nuts (4)
3. Skid (2)

4. Support the auger blades so that they are 1/8 inch (3 mm) off the ground (Figure 28).

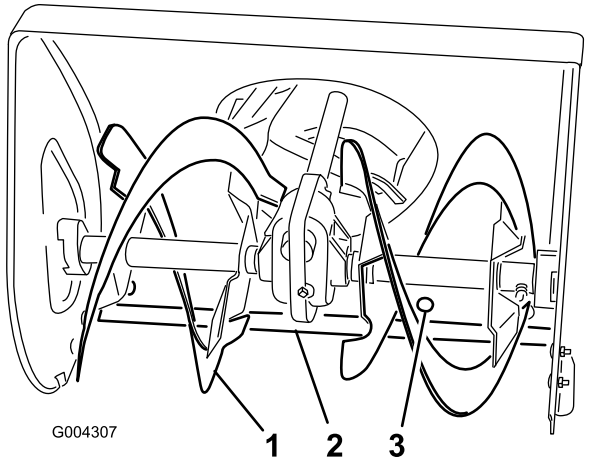

Figure 28

1. Auger blade
2. Scraper
3. Mounting screw (5)

5. Check the scraper adjustment. The scraper should be 1/8 inch (3 mm) above and parallel to a level surface.
   A. **For Concrete and Asphalt Surfaces:**

      If the snowthrower does not clear the snow close enough to the pavement, adjust the skids to lower the scraper; if the pavement surfaces are cracked, rough, or uneven, adjust the skids to raise the scraper.

   B. **For Gravel Surfaces:**

      Support the auger blades a few inches (cm) above the ground, and adjust the skids to prevent the snowthrower from picking up rocks.
6. To adjust the scraper, loosen the 5 mounting screws (Figure 28), level the scraper, and tighten the mounting screws.
7. Move the skids down as far as possible.
8. Tighten the 4 flange nuts that secure both skids to the auger side plates (Figure 27).

Adjusting the Speed Selector

Adjust the speed selector linkage initially and when the snowthrower is slow, first gear has no speed, or the speed selector lever does not move into third gear.

1. Drain gasoline from the fuel tank and the engine oil from the crankcase. Refer to Emptying the Fuel Tank and to Changing the Engine Oil.
2. Tip the snowthrower forward and block it so that it cannot fall.
3. Remove the 4 flange-head bolts that secure the bottom cover to the frame and remove the cover (Figure 33).

4. Loosen the flange nuts that secure the selector plate to the control panel (Figure 29).

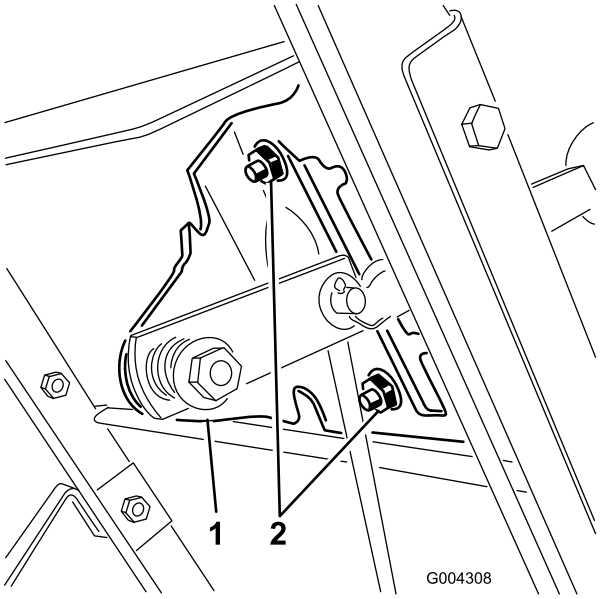

Figure 29

1. Speed selector plate
2. Flange nuts

5. Shift the speed selector lever to third gear and push down on the speed selector plate to move the drive assembly to the right.

   Note: The drive assembly should be 1/8 inch (3 mm) from the roll pin; if not, slide the selector plate (Figure 29) until the gap is 1/8 inch (3 mm); refer to Figure 30.

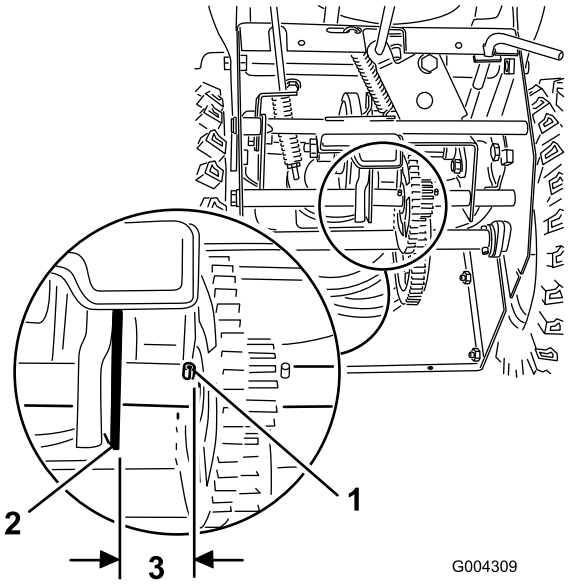

Figure 30

1. Roll pin
2. Drive assembly
3. 1/8 inch (3 mm)

6. With the drive assembly 1/8 inch (3 mm) from the roll pin, tighten the flange nuts that secure the speed selector plate.
7. Shift the speed selector lever to the R (Reverse) position and back to third gear to check the adjustment.
8. If the space between the roll pin and the drive assembly is more than 3/16 inch (5 mm), repeat steps 3 through 6.
9. Install the bottom cover and return the snowthrower to the upright position.

Checking the Auger Gearbox Grease

Service Interval: Yearly

The auger gearbox is packed with 5 oz. (140 g) of Lubriplate MAG-1 (a low-temperature, high-pressure grease) and is sealed at the factory. The pipe plug (Figure 31) is for factory use only; you do not need to check or add grease. If the gearbox is leaking grease, contact an Authorized Service Dealer.

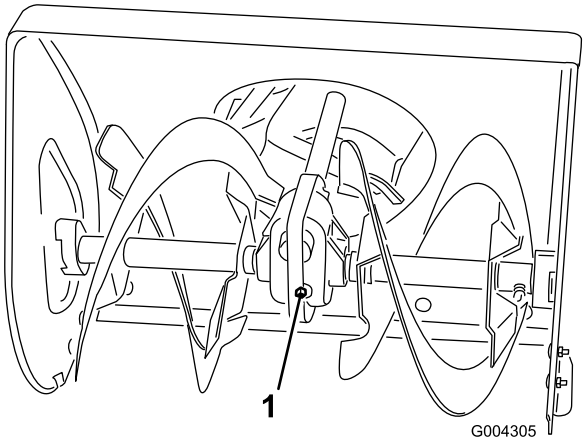

Figure 31

1. Pipe plug

Changing the Engine Oil

Service Interval: After the first 2 hours
Yearly
Every 25 hours

If possible, run the engine just before changing the oil because warm oil flows better and carries more contaminants.

Max. fill: 21 oz. (0.62 l), type: automotive detergent oil with an API service classification of SF, SG, SH, SJ, SL, or higher.

- For temperatures above 32°F (0°C), use SAE 30.

- For temperatures between 0°F and 32°F (-18°C to 0°C), use SAE 5W30 or SAE 10.
- For air temperatures below 0°F (-18°C), use SAE 0W30.

1. Block up the rear of the snowthrower.
2. Remove the left wheel.
3. Clean the area around the oil drain plug (Figure 32).

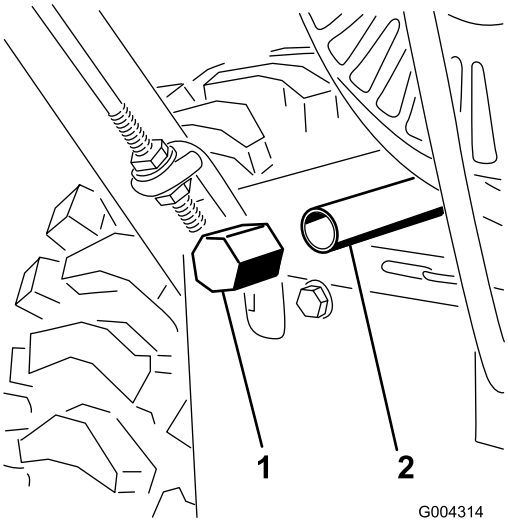

Figure 32

1. Oil drain plug
2. Drain extension

4. Slide an oil drain pan under the drain extension and remove the oil drain plug (Figure 32).

   Note: Place a funnel under the drain extension so the oil drains directly into the oil drain pan and away from the snowthrower.

5. Drain the oil.

   Note: Dispose of the used oil properly at a local recycling center.

6. Install the oil drain plug.
7. Install the left wheel.
8. Fill the crankcase with oil. Refer to Filling the Engine with Oil in Setup.
9. Wipe up any spilled oil.

Lubricating the Snowthrower

Service Interval: Every 20 hours

Yearly or before storage

Lightly lubricate all moving parts of the snowthrower after every 20 operating hours and at the end of the snowthrowing season.

Important: Do not get oil or grease on the rubber wheel or friction drive plate because the wheel will slip and the rubber may deteriorate.

1. Drain gasoline from the fuel tank and the oil from the crankcase. Refer to Emptying the Fuel Tank and to Changing the Engine Oil.
2. Tip the snowthrower forward onto the auger/impeller housing and block it so that it cannot fall.
3. Remove the 4 flange-head bolts that secure the bottom cover and remove the cover (Figure 33).

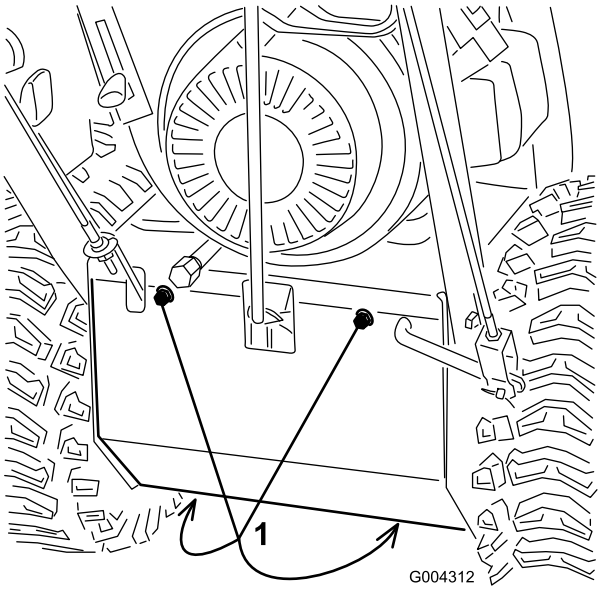

Figure 33

1. Flange-head bolts

4. Lightly lubricate the snowthrower with light oil as shown in Figure 34.

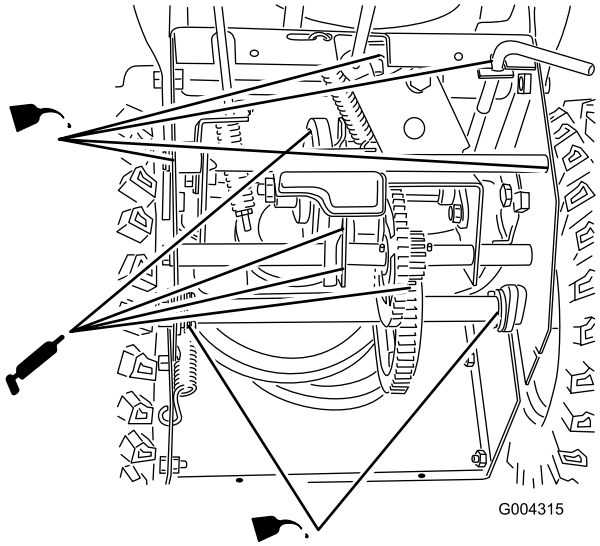

Figure 34

Important: Do not excessively oil the snowthrower; extra oil may enter the traction drive and cause the traction drive belt to slip.

5. Wipe up any excess oil.
6. Grease the snowthrower as shown in Figure 34.
7. Wipe up any excess grease.
8. Install the bottom cover.
9. Return the snowthrower to its upright position.

Inspecting and Replacing the Spark Plug

Service Interval: Every 100 hours

Use a **Champion RJ-19LM** or equivalent spark plug. Check and gap the spark yearly, and replace the plug if necessary.

1. Clean around the base of the spark plug.
2. Remove the spark plug.
3. Examine the spark plug and replace it if it is cracked, fouled, dirty, or if the electrodes are worn.

   Important: Do not clean the electrodes because grit could enter the cylinder and damage the engine.

4. Set the gap between the electrodes on the spark plug at 0.030 inch (0.76 mm) (Figure 35).

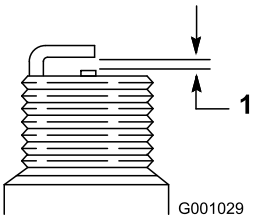

Figure 35

1. 0.030 inch (0.76 mm)

5. Install the spark plug by hand and then torque it to 15 ft-lb (20.4 N-m).

   Note: If you do not have a torque wrench, tighten the plug firmly.

Adjusting the Traction Drive Belt

Service Interval: After the first hour

Before each use or daily

Adjust the traction drive belt after the first operating hour, after every 5 operating hours thereafter, and when the speed selector lever shifts properly but the snowthrower does not drive in the forward or reverse speeds.

1. Check and adjust the traction drive as described in Installing the Traction Rod in Setup.
2. If the problem persists after adjusting the linkage, contact an Authorized Service Dealer.

Replacing the Traction Drive Belt

If the traction drive belt becomes worn, oil-soaked, or otherwise damaged, replace the belt.

1. Drain gasoline from the fuel tank and the oil from the crankcase. Refer to Emptying the Fuel Tank and to Changing the Engine Oil.
2. Remove the 2 flange-head bolts that hold the belt cover in place and set the cover aside (Figure 36).

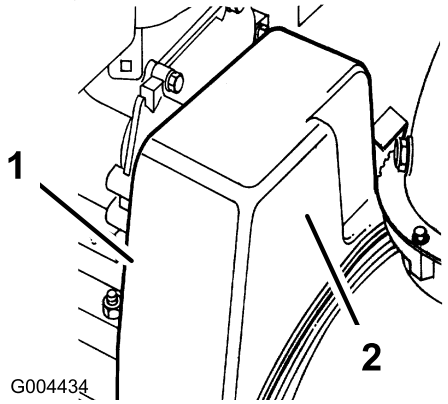

Figure 36

1. Flange-head bolt (2)
2. Belt cover

3. Loosen the belt guide (Figure 37).

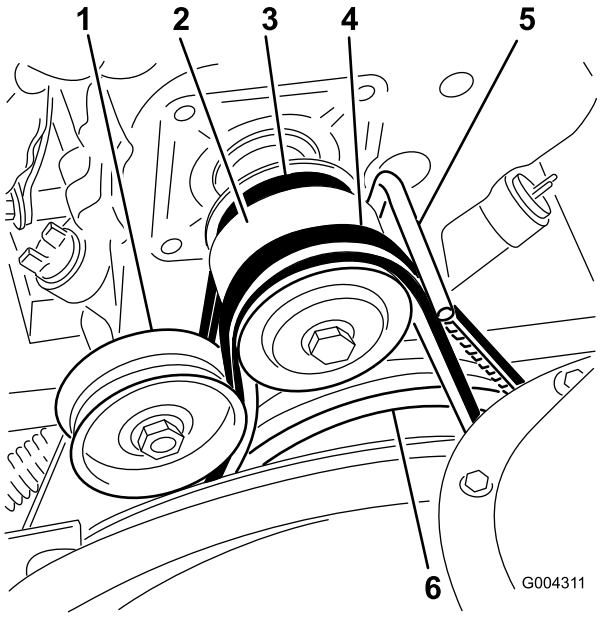

Figure 37

1. Idler pulley
2. Engine pulley
3. Auger/impeller drive belt
4. Traction drive belt
5. Belt guide
6. Large auger/impeller pulley

4. Remove the auger/impeller drive belt from the engine pulley and the large auger/impeller pulley (Figure 37).
5. Tip the snowthrower forward and block it so that it cannot fall.
6. Remove the 4 flange-head bolts that secure the bottom cover to the frame and remove the cover (Figure 33).
7. Disconnect the spring from the notch in the bottom edge of the side plate (Figure 38).

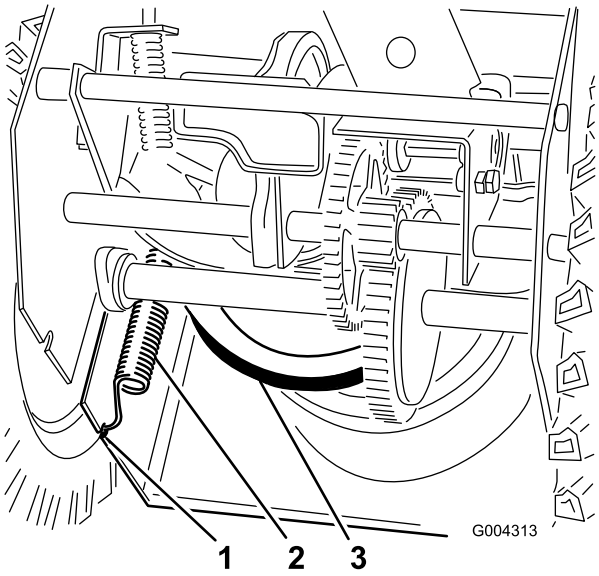

Figure 38

1. Notch in side plate
2. Spring
3. Large traction pulley

The spring is under heavy tension and could injure the you or a bystander if you do not carefully remove it.

Carefully remove the spring.

8. Set the snowthrower upright.
9. Remove the traction drive belt from the engine pulley and the large traction pulley (Figure 37).
10. Install a new belt around the large traction pulley.
11. Loop the belt over the engine pulley, ensuring that the belt is on the inside of the belt guide (Figure 37).
12. Tip the snowthrower forward and block it so that it cannot fall.
13. Hook the spring into the notch in the bottom edge of the side plate (Figure 38).
14. Replace the bottom cover with the 4 flange-head bolts.
15. Set the snowthrower upright.
16. Install the auger/impeller drive belt around the large auger/impeller pulley and engine pulley, ensuring that the belt is on the inside of the idler pulley and the belt guide (Figure 37).
17. Adjust the belt guide so that there is 1/8 inch (3 mm) of clearance between the auger/impeller drive belt and the guide, and secure the belt guide when the auger/impeller drive belt is tight.

18. Check the auger/impeller drive linkage and adjust it if necessary. Refer to steps 4 through 7 of Installing the Auger/Impeller Drive Control Linkage in Setup.
19. Install the belt cover.

Adjusting the Auger/Impeller Drive Belt

Service Interval: After the first hour

Before each use or daily

Operating the snowthrower with an auger/impeller drive belt that slips decreases the snowthrowing performance and damages the belt. Check the auger/impeller drive belt for the proper tension after the first operating hour, then check and adjust the belt when necessary.

Improperly adjusting the auger/impeller may cause it to turn when disengaged. A rotating auger or impeller can cut off or injure fingers, hands, or feet.

- **Keep your face, hands, feet, and any other part of your body or clothing away from concealed, moving, or rotating parts.**
- **Ensure that the impeller brake arm clearance is maintained.**
- **Do not adjust the auger/impeller drive belt too tight because it may cause the auger/impeller to turn when the control lever is in the Disengaged position. If this occurs, decrease the belt tension.**

1. Check and adjust the belt as instructed in Installing the Auger/Impeller Drive Control Linkage in Setup.
2. Connect the wire to the spark plug.
3. Check the belt tension by operating the auger.
4. If the belt still slips, replace it. Refer to Replacing the Auger/Impeller Drive Belt.

   Important: Do not operate the snowthrower if the auger and the impeller rotate when you disengage the auger/impeller drive control lever.

Replacing the Auger/Impeller Drive Belt

If the auger/impeller drive belt becomes worn, oil-soaked, or otherwise damaged, replace the belt.

1. Remove the 2 flange-head bolts that hold the belt cover in place and set the cover aside (Figure 36).
2. Loosen the belt guide (Figure 37).
3. Remove the auger/impeller drive belt from the engine pulley and the large auger/impeller pulley (Figure 37).
4. Install a new belt around the large auger/impeller pulley (Figure 37).
5. Loop the belt over the engine pulley, ensuring that the belt is on the inside of the idler pulley and the belt guide (Figure 37).
6. Adjust the belt guide so that there is 1/8 inch (3 mm) of clearance between the auger/impeller drive belt and the guide, and secure the belt guide.
7. Check and adjust the auger/impeller drive belt as instructed in Installing the Auger/Impeller Drive Control Linkage in Setup.
8. Install the belt cover.

   Important: Do not operate the snowthrower if the auger and the impeller rotate when you disengage the auger/impeller drive control lever.

Emptying the Fuel Tank

1. Close the fuel shutoff valve (Figure 13).

Gasoline is highly flammable; it can ignite and cause serious personal injury.

- **Drain gasoline outdoors**
- **Drain gasoline from a cold engine only.**
- **Wipe up any gasoline that may have spilled.**
- **Do not drain gasoline near any open flame or where gasoline fumes may be ignited by a spark.**
- **Do not smoke a cigar, a cigarette, or a pipe when handling gasoline.**

2. Place a clean drain pan under the fuel shutoff valve.
3. Loosen the hose clamp that secures the fuel line to the valve and slide the fuel line off the fuel shutoff valve (Figure 13).

4. Open the fuel shutoff valve and allow the fuel to drain out of the fuel tank into the drain pan.
5. Install the fuel line onto the fuel shutoff valve and secure it with a hose clamp.
6. Connect the wire to the spark plug.
7. Start the snowthrower and run the engine until it stops. Repeat this step 2 more times to ensure that the fuel tank and the carburetor are empty.

Storage

- **Gasoline vapors can explode.**
- **Do not store gasoline more than 30 days.**
- **Do not store the snowthrower in an enclosure near an open flame.**
- **Allow the engine to cool before storing it.**

Preparing the Snowthrower for Storage

1. On the last refueling of the year, add fuel stabilizer to fresh fuel as directed by the engine manufacturer.
2. Run the engine for 10 minutes to distribute the conditioned fuel through the fuel system.
3. Stop the engine, allow it to cool, and drain the fuel tank or run the engine until it stops. Refer to Emptying the Fuel Tank.
4. Start the engine and run it until it stops.
5. Choke or prime the engine, start it a third time, and run the engine until it will not start.
6. Dispose of unused fuel properly. Recycle it according to local codes, or use it in your automobile.

   Note: Do not store stabilized gasoline for more than 90 days.
7. While the engine is still warm, change the engine oil. Refer to Changing the Engine Oil.
8. Remove the spark plug.
9. Squirt 2 teaspoons of oil into the spark plug hole.
10. Install the spark plug by hand and then torque it to 15 ft-lb (20.4 N-m). If you do not have a torque wrench, tighten the plug firmly. **Do not connect the wire to the plug.**
11. Pull the recoil starter slowly to distribute the oil on the inside of the cylinder.
12. Lubricate the snowthrower. Refer to Lubricating the Snowthrower.
13. Clean the snowthrower.
14. Touch up chipped surfaces with paint available from an Authorized Service Dealer. Sand affected areas before painting, and use a rust preventative to prevent the metal parts from rusting.
15. Tighten any loose fasteners. Repair or replace any damaged parts.
16. Cover the snowthrower and store it in a clean, dry place out of the reach of children. Allow the engine to cool before storing it in any enclosure.

Removing the Snowthrower from Storage

1. Remove the spark plug and spin the engine rapidly using the starter to blow the excess oil from the cylinder.
2. Install the spark plug by hand and then torque it to 15 ft-lb (20.4 N-m).
3. Connect the spark plug wire.
4. Perform the annual maintenance procedures as given in the Recommended Maintenance Schedule.

Troubleshooting

Problem	Possible Cause	Corrective Action
Electric starter does not turn (electric-start models only)	1. The power cord is disconnected at the outlet or the snowthrower. 2. The power cord is worn, corroded, or damaged. 3. The power outlet is not energized.	1. Connect the power cord to the outlet and/or the snowthrower. 2. Replace the power cord. 3. Have a qualified electrician energize the outlet.
Engine does not start or starts hard	1. The key is not in the ignition or is in the Stop position. 2. The choke is in the Off position and the primer has not been pressed. 3. The fuel shutoff valve is not open. 4. The throttle is not in the Fast position. 5. The fuel tank is empty or the fuel system contains stale fuel. 6. The spark plug wire is loose or disconnected. 7. The spark plug is pitted, fouled, or the gap is incorrect. 8. The fuel vent cap is restricted. 9. The engine oil level in the engine crankcase is too low or too high.	1. Insert the key into the ignition and turn it to the On position. 2. Move the choke to the On position and press the primer 3 times. 3. Open the fuel shutoff valve. 4. Move the throttle to the Fast position. 5. Drain and/or fill the fuel tank with fresh gasoline (not more than 30 days old). If the problem persists, contact an Authorized Service Dealer. 6. Connect the wire to the spark plug. 7. Check the spark plug and adjust the gap if necessary. Replace the spark plug if it is pitted, fouled, or cracked. 8. Remove the vent restriction or replace the fuel cap. 9. Add or drain oil to adjust the oil level in the engine crankcase to the Full mark on the dipstick.
Engine runs rough	1. The choke is in the On position. 2. The fuel shutoff valve is not completely open. 3. The fuel tank is nearly empty or contains stale fuel. 4. The spark plug wire is loose. 5. The spark plug is pitted, fouled, or the gap is incorrect. 6. The engine oil level in the engine crankcase is too low or too high.	1. Move the choke to the Off position. 2. Open the fuel shutoff valve. 3. Drain and fill the fuel tank with fresh gasoline (not more than 30 days old). If the problem persists, contact an Authorized Service Dealer. 4. Connect the wire to the spark plug. 5. Check the spark plug and adjust the gap if necessary. Replace the spark plug if it is pitted, fouled, or cracked. 6. Add or drain oil to adjust the oil level in the engine crankcase to the Full mark on the dipstick.
Engine runs, but the snowthrower discharges snow poorly or not at all	1. The throttle is not in the Fast position when throwing snow. 2. The snowthrower is moving too fast to clear the snow. 3. You are trying to remove too much snow per swath. 4. You are trying to remove extremely heavy or wet snow. 5. The discharge chute is plugged. 6. The auger/impeller drive belt is loose or is off the pulley.	1. Move the throttle to the Fast position. 2. Shift the snowthrower into a lower gear. 3. Reduce the amount of snow removed per swath. 4. Don't overload the snowthrower with extremely heavy or wet snow. 5. Unclog the discharge chute. 6. Install and/or adjust the auger/impeller drive belt; refer to www.Toro.com for servicing information or take the snowthrower to an Authorized Service Dealer.

Problem	Possible Cause	Corrective Action
	7. The auger/impeller drive belt is worn or broken.	7. Replace the auger/impeller drive belt; refer to www.Toro.com for servicing information or take the snowthrower to an Authorized Service Dealer.
Discharge chute either does not lock into place or does not move	1. The discharge chute latch is not properly adjusted.	1. Adjust the discharge chute latch.
Snowthrower does not properly clear the snow off the surface	1. The skids and/or scraper are not properly adjusted. 2. The pressure in the tires is not equal.	1. Adjust the skids and/or the scraper. 2. Check and adjust the pressure in one or both tires.

Notes:

Gas Powered Snow Products

The Toro Total Coverage Guarantee

A Two-Year Full Warranty (Limited Warranty for Commercial Use)

Conditions and Products Covered

The Toro Company and its affiliate, Toro Warranty Company, pursuant to an agreement between them, jointly promise to repair any Toro Product used for normal residential purposes* if defective in materials or workmanship.

The following time periods apply from the date of purchase:

Snow Products	Warranty Period
All products and attachments	2-year full warranty
Power Max™ snow products:	
Chute	5-year full warranty
Chute deflector	5-year full warranty
Impeller housing cover	5-year full warranty

This warranty includes the cost of parts and labor, but you must pay transportation costs. Transportation within a fifteen mile radius of the servicing dealer is covered under this warranty for two-stage snowthrowers only.

This warranty applies to all gasoline powered snow products.

* Normal residential purposes means use of the product on the same lot as your home. Use at more than one location is considered commercial use, and the commercial use warranty would apply.

Limited Warranty for Commercial Use

Toro Consumer Products used for commercial, institutional, or rental use are warranted against defects in materials or workmanship for 45 days from the date of purchase.

Instructions for Obtaining Warranty Service

If you think that your Toro Product contains a defect in materials or workmanship, follow this procedure:

1. Contact any Toro Authorized or Master Service Dealer to arrange service at their dealership. To locate a dealer convenient to you, refer to the Yellow Pages of your telephone directory (look under "Lawn Mowers") or access our website at www.Toro.com. U.S. Customers may also call 800-248-8676 to use our 24-hour Toro dealer locator system.
2. Bring the product and your proof of purchase (sales receipt) to the Service Dealer.

If for any reason you are dissatisfied with the Service Dealer's analysis or with the assistance provided, contact us at:

Customer Care Department, Consumer Division
Toro Warranty Company
8111 Lyndale Avenue South
Bloomington, MN 55420-1196
866-336-5205 Toll free (U.S. customers)
866-854-9033 Toll free (Canada customers)

Owner Responsibilities

You must maintain your Toro Product by following the maintenance procedures described in the operator's manual. Such routine maintenance, whether performed by a dealer or by you, is at your expense.

Items and Conditions Not Covered

There is no other express warranty except for special emission system coverage on some products and the Toro Starting Guarantee on GTS engines. This express warranty does not cover:

- Cost of regular maintenance service or parts, such as filters, fuel, lubricants, tune-up parts, brake and clutch adjustments
- Any product or part which has been altered, misused, or required replacement or repair due to normal wear, accidents, or lack of proper maintenance
- Repairs necessary due to improper fuel, contaminants in the fuel system, or failure to properly prepare the fuel system prior to any period of non-use over three months

All repairs covered by this warranty must be performed by an Authorized Toro Service Dealer using Toro approved replacement parts.

General Conditions

Repair by an Authorized Toro Service Dealer is your sole remedy under this warranty.

Neither The Toro Company nor Toro Warranty Company is liable for indirect, incidental or consequential damages in connection with the use of the Toro Products covered by this warranty, including any cost or expense of providing substitute equipment or service during reasonable periods of malfunction or non-use pending completion of repairs under this warranty.

Some states do not allow exclusions of incidental or consequential damages, or limitations on how long an implied warranty lasts, so the above exclusions and limitations may not apply to you.

This warranty gives you specific legal rights, and you may also have other rights which vary from state to state.

Countries Other than the United States or Canada

Customers who have purchased Toro products exported from the United States or Canada should contact their Toro Distributor (Dealer) to obtain guarantee policies for your country, province, or state. If for any reason you are dissatisfied with your Distributor's service or have difficulty obtaining guarantee information, contact the Toro importer. If all other remedies fail, you may contact us at Toro Warranty Company.