FORM NO. 3316–737

TORO®

Yard & Garden Tractor

Model No. 72042 — 4900001 & Up
Model No. 72062 — 4900001 & Up
Model No. 72043 — 4900001 & Up
Model No. 72063 — 4900001 & Up
Model No. 72083 — 4900001 & Up Loose parts 16-7319
Model No. 72103 — 4900001 & Up

ONLY COPY
REMOVE
Tech. Publications

Parts Catalog

ORDERING REPLACEMENT PARTS

To order replacement parts, please supply: the part number, the quantity, and the description of each part desired.

Contents

Description	Page
Hood and Grill	1
Hood and Grill	2
Dash	3
Dash	4
Steering Wheel and Tilt	5
Lower Steering	6
Front Axle	7
Front Axle	8
Seat	9
Fuel Tank and Hydro Reservoir	10
Fender and Footrest	11
Fender and Footrest	12
Hoodstand and Firewall	13
Hoodstand and Firewall	14
Lift Lever and Height of Cut	15
Lift Lever and Height of Cut	16
Frame	17
Hydro Drive Components	18
Gear Drive Components	19
Gear Drive Components	20
Twin Cylinder Engine, Muffler, and P.T.O.	21
Single Cylinder Engine, Muffler, and P.T.O.	22
Clutch 92–6885	23
Battery	24
Hydro Brake	25
Hydro Control	26
Hydro Transaxle	27
Transaxle — Gear	28
Gear Shift Linkage	29
Gear Shift Linkage	30
Clutch and Brake — Gear	31
Rear Wheel	32
Kohler Engine CV14S–PS1472	
Crankshaft	33
Crankcase	34
Crankcase	35
Oil Pan / Lubrication	36
Cylinder Head / Valve / Breather	37
Ignition / Electrical	38
Blower Housing & Baffles	39
Starting System	40
Fuel System	41
Fuel System	42
Engine Controls	43
Air Intake / Filtration	44
Exhaust	45
Kohler Engine CV16S–PS61514	
Crankshaft	46
Crankcase	47
Crankcase	48
Oil Pan / Lubrication	49
Head / Valve / Breather	50
Head / Valve / Breather	51
Ignition / Electrical	52
Blower Housing & Baffles	53
Starting System	54
Fuel System	55
Fuel System	56
Engine Controls	57
Air Intake / Filtration	58
Exhaust	59
Peerless Transaxle 820–024	60
Peerless Transaxle 820–024	61
Peerless Transaxle 820–024	62
Peerless Transaxle 820–024	63
Tuff Torq Transmission K61 (Toro)	
Transaxle Case	64
Center Case	65
Pump Shaft	66
Motor Shaft	67
Range Shift	68
Bypass Return	69
Lever Damper	70
N-Centering	71
Brake Interlock	72
Differential Gear	73
Final Pinion	74
Axle Shaft	75
Brake	76
Electric Schematic Single Cylinder Hydro Drive	77
Electric Schematic Single Cylinder Gear Drive	78
Electric Schematic Twin Cylinder Hydro Drive	79
Electric Schematic Twin Cylinder Gear Drive	80
Wire Harness Routing — Twin Cylinder Engine	81
Wire Harness Routing — Single Cylinder Engine	82

© The TORO Company — 1994
All Rights Reserved

Accessories

Description	Model / Part No.
38″ Side Discharge Mower	78216
38″ Recycler®	78226
42″ Side Discharge Mower	78231
48″ Side Discharge Mower	78260
38″ Twin Bagger	79202
42″/48″ Vacuum Bagger	79203
48″ Snow Blade	79252
42″ Snow Thrower	79262
36″ Tiller	29271

Description	Model / Part No.
Snowthrower Adaptor Kit adapts model 79261 snowthrower to fit YGT	92–6829
Snow Blade Adaptor Kit adapts model 79251 snow blade to fit YGT	92–6828
38″ Recycler® Kit converts model 78216 38″ side discharge mower to Recycler®	79710
Indicator Light	92–6831

Part Description Abbreviations

Part descriptions in this catalog may include the following abbreviations.

Abbreviation	Meaning
AR	as required
ASM	assembly
CARR	carriage
DEG	degrees
FH	flat head
GA	gauge
HF	hex flange
HFW	hex head flange
HH	hex head
HHF	hex head flange
HHST	hex head self tapping
HJ	hex jam
HOC	height-of-cut
HS	hex socket
HSBH	hex socket button head
HSFH	hex socket flat head
HSH	hex socket head
HWH	hex washer head
HWHTF	hex washer head thread forming
INC	includes
LH	left hand
PH	pan head
PPH	Phillips pan head
PTO	power take off
RH	right hand
SFH	slotted fillister head
SH	square head
SHWH	slotted hex washer head
SPH	slotted pan head
STD	standard
TAP	self tapping
TH	truss head
TTH	Torx truss head
WH	wing head

Important Format Explanations

This catalog uses special formats to convey information in illustrations and parts lists. Specifically, one format is used in conjunction with service assemblies and another with quantities associated with reference numbers.

Service Assemblies

Parts within service assemblies have reference numbers in the form *X:Y*. *X* is the reference number of the service assembly and *Y* is a sequential number unique to each part within the service assembly.

For example, a wheel assembly might be identified by reference number 6, the tire by 6:1, the valve by 6:2, and the wheel by 6:3. When you order the assembly identified by reference number 6, you receive all parts identified by reference numbers 6:1, 6:2, and 6:3. However, you may also order any part individually.

If a part number is not shown, you cannot order the part.

Reference numbers of this type appear in part lists and as callouts in illustrations.

Reference Numbers with Quantities

Illustrations may have a quantity in parentheses next to a reference number, in the form *X (Y)*. *X* is the reference number. *Y* in parentheses is the quantity of the part identified by the reference number.

For example, the illustration callout 4 (2) indicates that two parts are used in that instance.

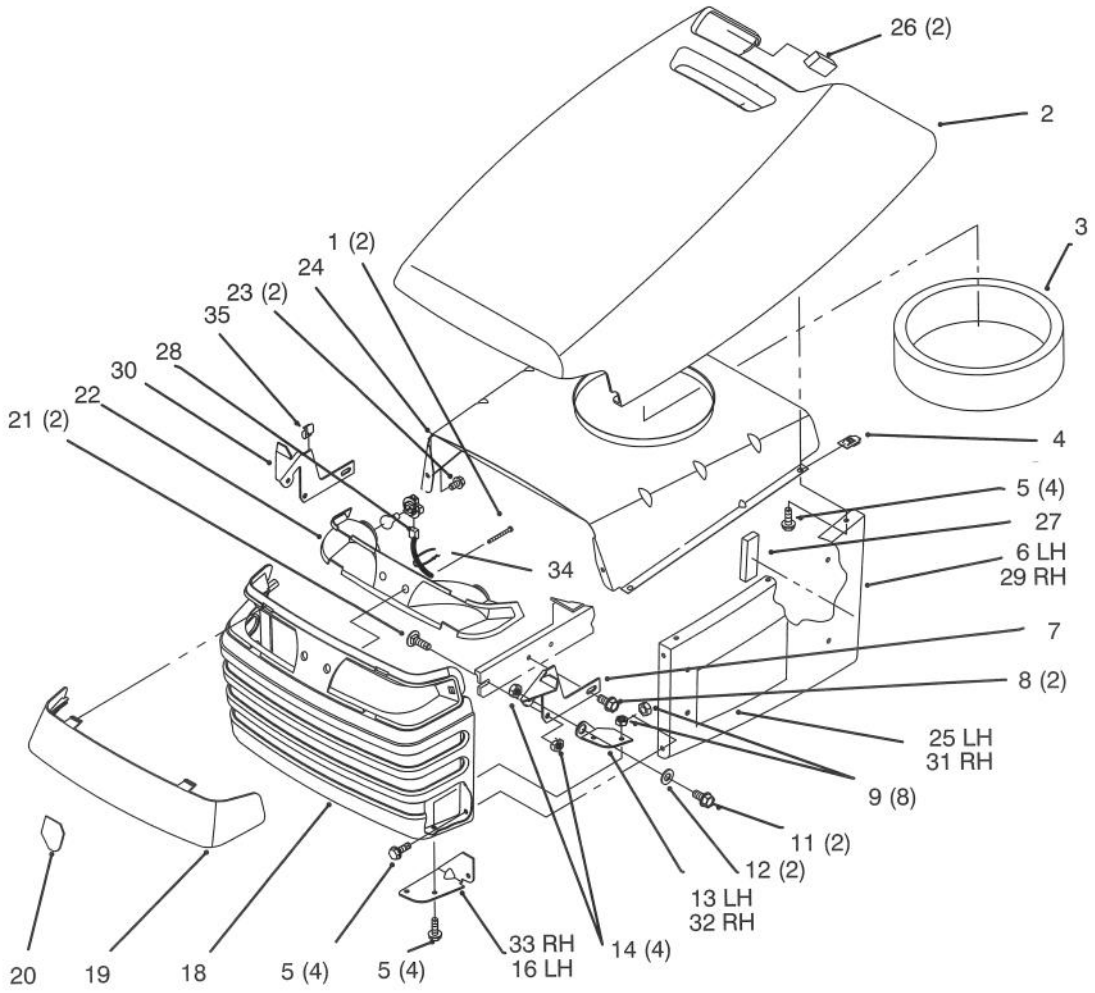

Sheet No.: 2

Hood and Grill

Ref. No.	Part No.	Qty.	Description
1	32144–32	2	Screw–Plastic
2	93–0490	1	Hood
3	92–7076	1	Inlet–Seal Air (Only On: 72103, 72083)
3	92–7077	1	Inlet–Seal Air (Only On: 72043, 72042, 72063, 72062)
4	92–7006	4	Nut
5	32105–15	12	Screw–HH
6	93–0491	1	Sidepanel–LH Hood
7	92–6918–03	1	Bracket–Hinge LH
8	32144–14	2	Screw–HH
9	32128–10	8	Nut–Lock HHF
11	322–3	2	Screw–HH
12	105503	2	Bushing
13	92–6997–03	1	Hinge–Hood LH
14	3296–29	4	Nut–Hex Lock
16	92–7049–03	1	Bracket–Hood Hinge LH
18	93–0494	1	Grille & Screen ASM
19	92–6656	1	Lens–Headlight
20	92–6987	1	Decal–Horsehead
21	3230–1	2	Screw–CARR
22	88–3970	1	Reflector–Lamp
23	46–8093	2	Screw–TAP
24	92–6914–03	1	Baffle–Hood Upper
25	92–6728	1	Decal–Hood LH
26	92–7147	2	Foam–Hood
27	92–7148	2	Foam–Sidepanel
28	88–4320	1	Harness–Wire

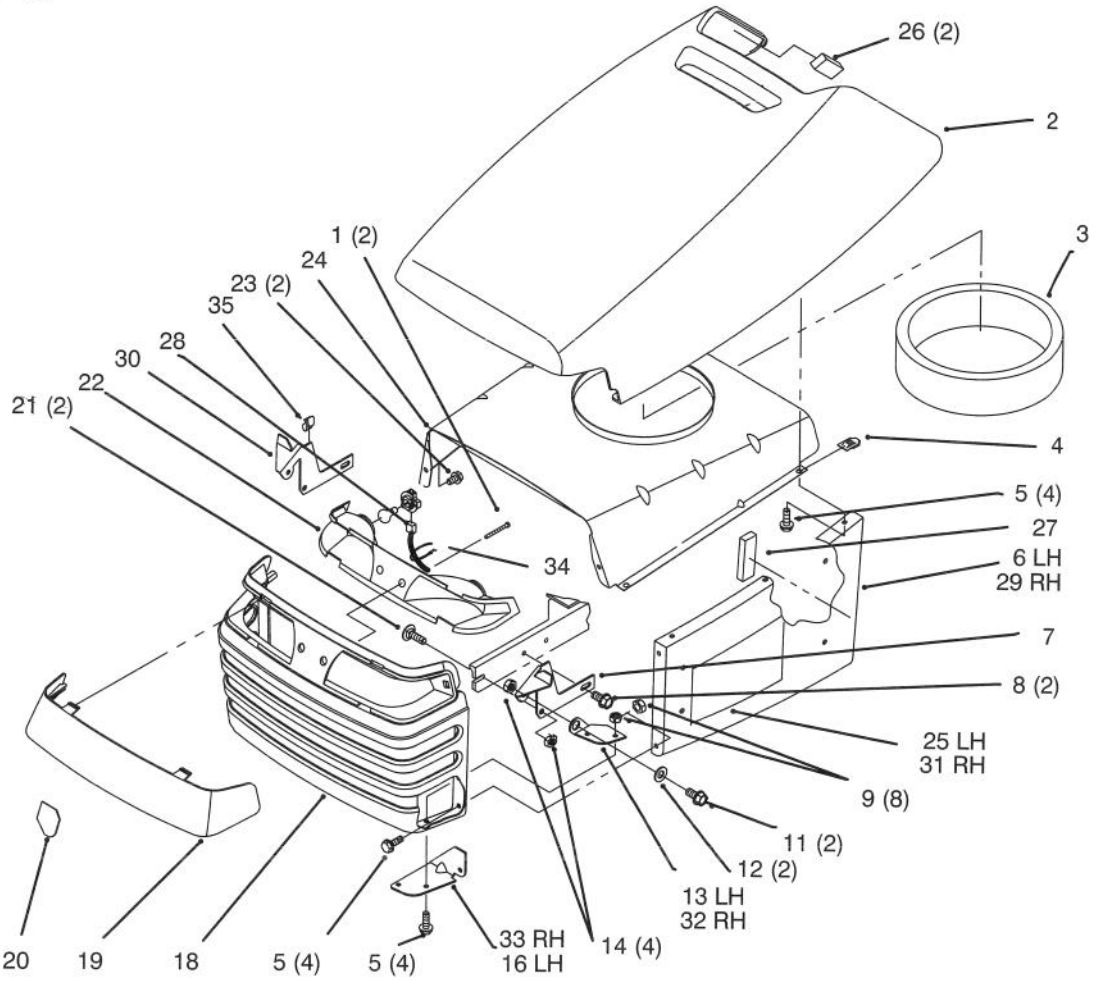

Sheet No.: 2

Hood and Grill

Ref. No.	Part No.	Qty.	Description
29	93–0492	1	Sidepanel–RH Hood
30	92–6917–03	1	Bracket–Hinge RH
31	92–6729	1	Decal–Hood RH
32	92–6996–03	1	Hinge–Hood RH
33	92–7048–03	1	Bracket–Hood Hinge RH
34	614249	1	Tie Strap
35	702366	1	Clip–Wire Retainer

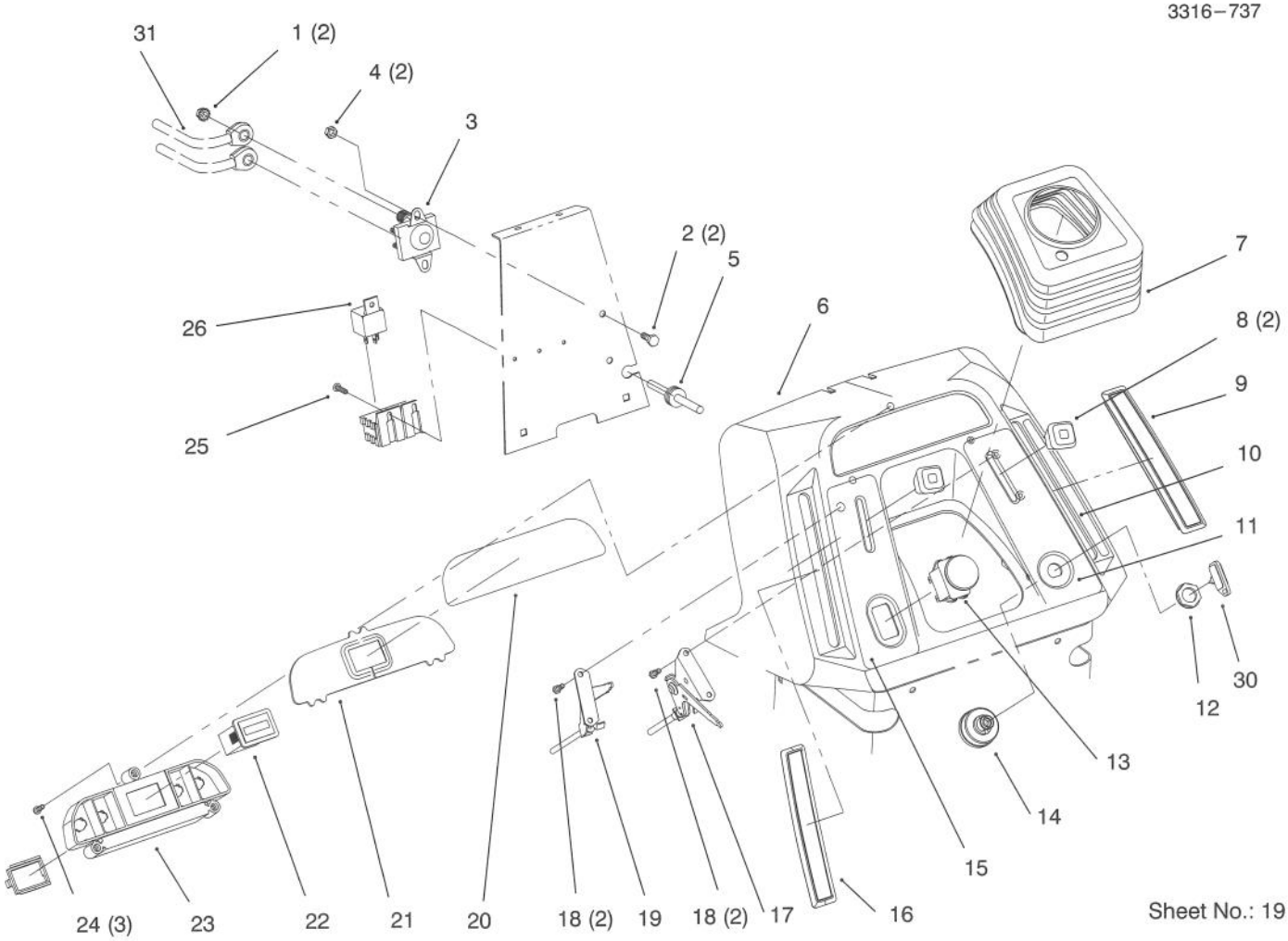

Dash

Ref. No.	Part No.	Qty.	Description
1	32149–2	2	Nut–Hex (Only On: 72043, 72042, 72063, 72062)
2	321–4	2	Screw–HH (Only On: 72043, 72042, 72063, 72062)
3	92–9845	1	Solenoid – 12 Volt (Only On: 72043, 72042, 72063, 72062)
4	3296–42	2	Nut–Hex Lock (Only On: 72043, 72042, 72063, 72062)
5	237–141	1	Grommet
6	92–6510	1	Dash
7	92–6680	1	Boot–Steering
8	66–0120	2	Knob
9	92–6796	1	Cover–Slot RH (Only On: 72043, 72063, 72083, 72103)
10	92–6722	1	Decal–Shift (Only On: 72042, 72062)
11	92–6721	1	Decal–Throttle/Ignition (Only On: 72042, 72043, 72083)
11	92–7087	1	Decal–Throttle/Ignition (Only On: 72103, 72063, 72062)
12	700919	1	Nut
13	92–6787	1	Switch–PTO
14	92–6785	1	Switch INC 12 & 30
15	92–6720	1	Decal–Choke/PTO (Only On: 72042, 72043, 72083)
15	92–7086	1	Decal–PTO/Choke (Only On: 72103, 72063, 72062)
16	92–6797	1	Cover–Slot LH
17	92–6782	1	Control–Throttle (Only On: 72043, 72042, 72063, 72062)
17	92–6784	1	Control–Throttle (Only On: 72103, 72083)
18	32144–32	4	Screw–Plastic
19	92–6781	1	Control–Choke (Only On: 72043, 72042, 72063, 72062)
19	92–6783	1	Control–Choke (Only On: 72103, 72083)
20	92–6973	1	Decal–Dash Lens (Only On: 72043, 72083, 72103)
20	92–6975	1	Decal–Dash Lens (Only On: 72042, 72062, 72063)
21	92–6705	1	Lens–Dash

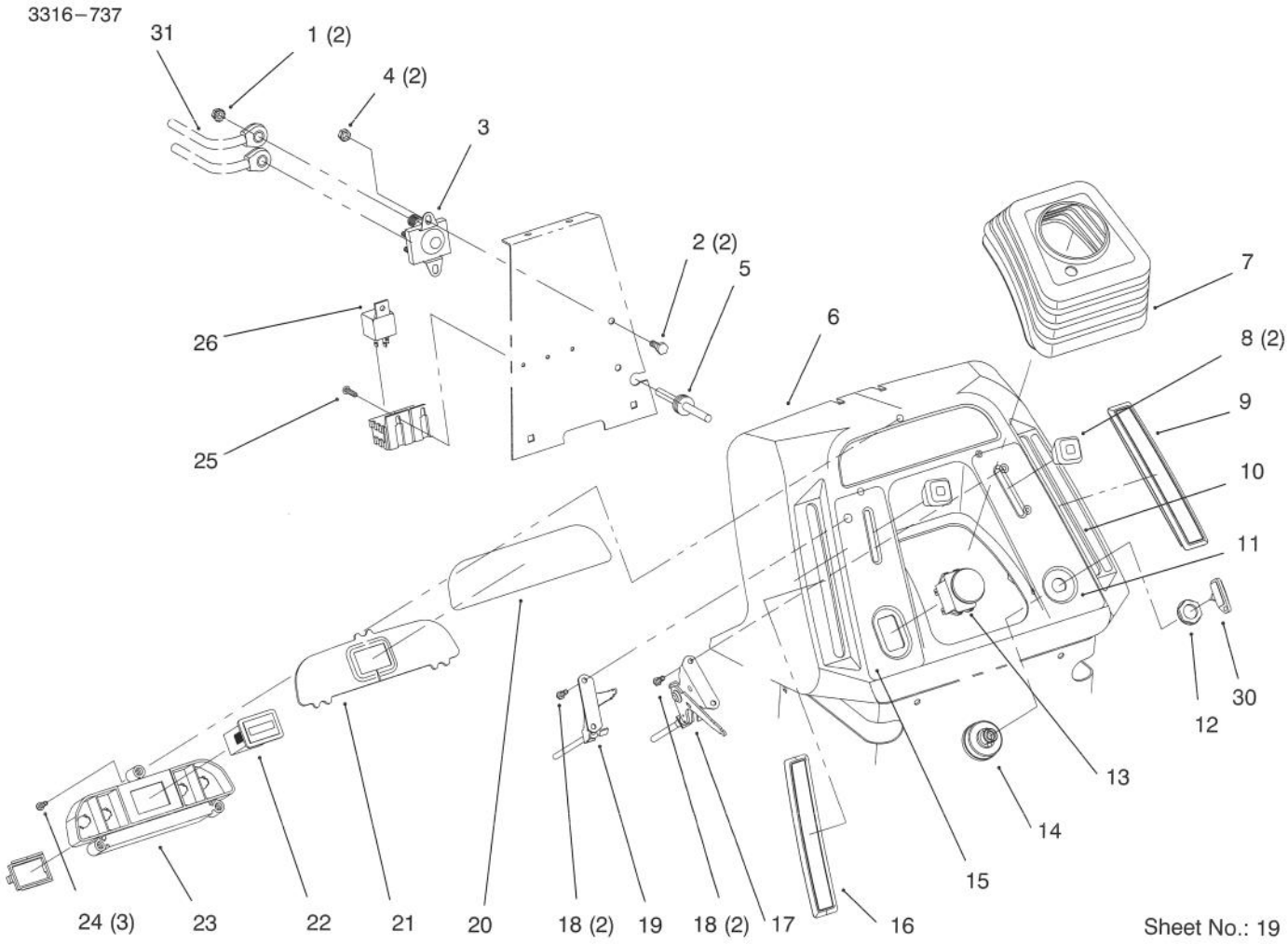

Dash

Ref. No.	Part No.	Qty.	Description
22	92–6715	1	Hourmeter
23	92–6709	1	Light–Indicator (Only On: 72043, 72083, 72103)
23	92–6732	1	Housing–Indicator Light (Only On: 72042, 72062, 72063)
24	32104–118	3	Screw–PH
25	32144–8	2	Screw–PPH
26	116397	2	Relay
30	62–7770	1	Key–Ignition
31	92–6989	1	Cable–Battery Red (Only On: 72043, 72042, 72063, 72062)

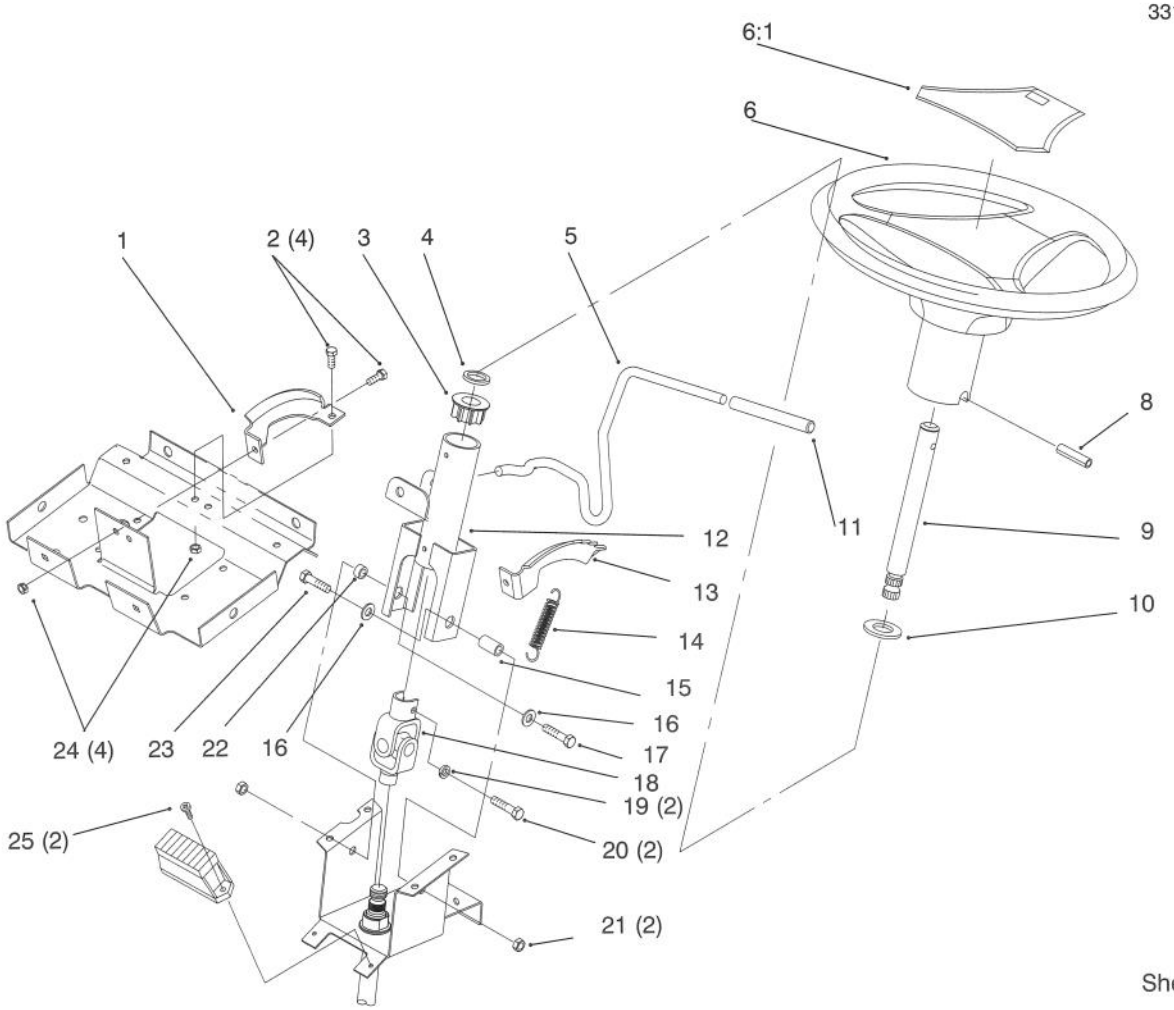

Sheet No.: 9

Steering Wheel and Tilt

Ref. No.	Part No.	Qty.	Description
1	92–6777–03	1	Bracket–Support
2	321–4	4	Screw–HH
3	93–1146	1	Bushing–Steering
4	7896	1	Washer–Bowed
5	92–6971	1	Lever–Tilt
6	88–3850	1	Steering Wheel (Only On: 72042, 72062, 72043)
6	92–6657	1	Steering Wheel (Only On: 72063, 72083, 72103)
6:1	88–3870	1	Cover–Steering Wheel (Only On: 72063, 72062, 72083, 72043, 72103)
8	32121–111	1	Pin–Spiral
9	92–6704	1	Shaft–Steer Upper
10	3256–28	1	Washer–Flat
11	92–6798	1	Cap–Rod
12	93–1148–03	1	Column
13	92–6776	1	Bracket–Detent
14	93–1357	1	Spring–Extension
15	92–6999	1	Spacer–Yoke
16	3256–23	2	Washer–Flat
17	322–3	1	Screw–HH
18	92–6717	1	U–Joint–Steering
19	3253–4	2	Washer–Lock
20	48–7730	2	Screw–HH
21	3296–29	2	Nut–Hex Lock
22	92–6998	1	Spacer–Yoke
23	322–17	1	Screw–HH
24	3296–8	4	Nut–Lock
25	32144–8	2	Screw–PPH

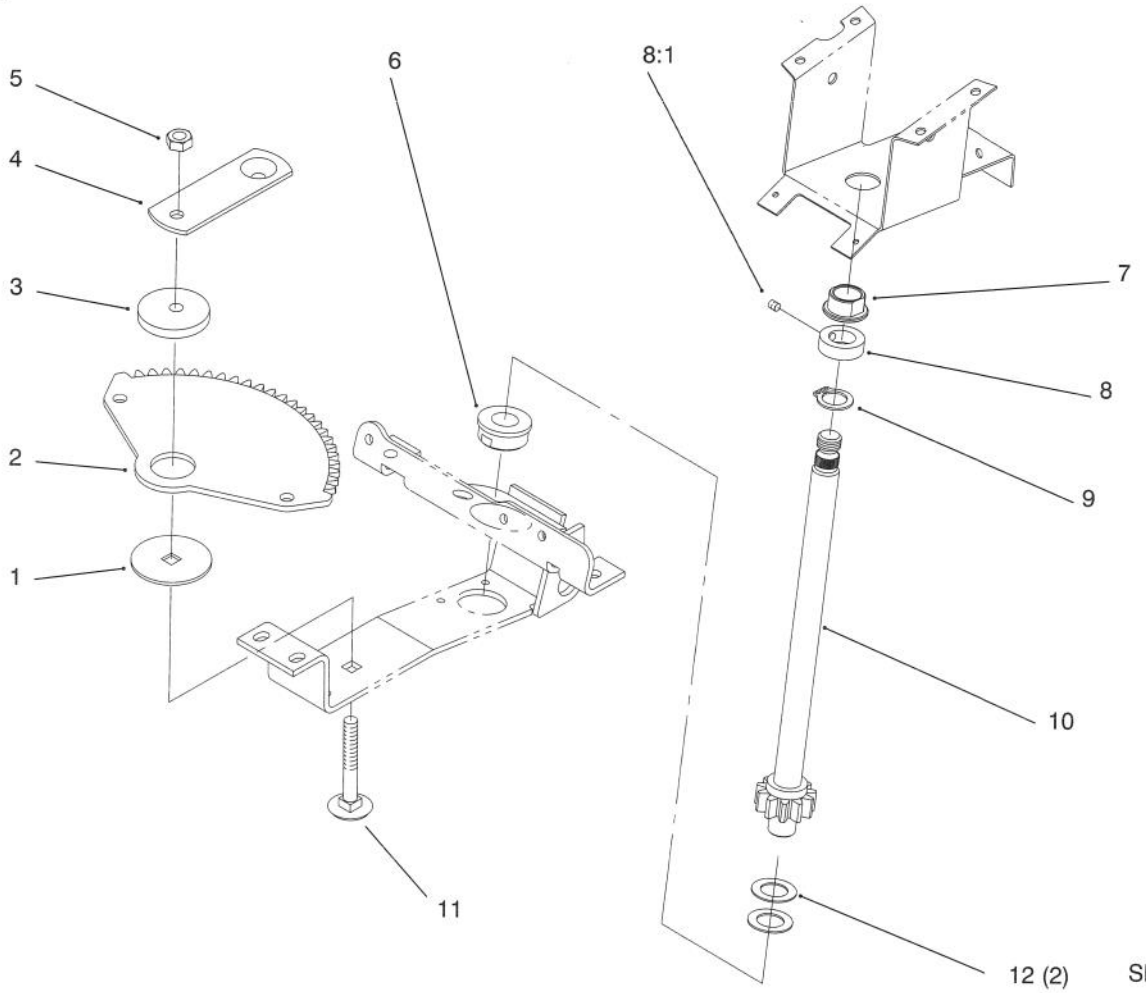

Sheet No.: 8

Lower Steering

Ref. No.	Part No.	Qty.	Description
1	111419	1	Washer–Bearing
2	78–2610	1	Gear–Sector
3	111418	1	Bushing
4	78–9150–03	1	Plate
5	108881	1	Nut–Hex
6	110391	1	Bearing–Wheel
7	109189	1	Bearing–Flange
8	111383	1	Collar W/Set Screw
8:1	3245–32	1	Screw–Set
9	111646	1	Gripring
10	92–6702	1	Shaft–Steering Lower
11	3231–4	1	Bolt–CARR
12	1278	2	Washer–Shim

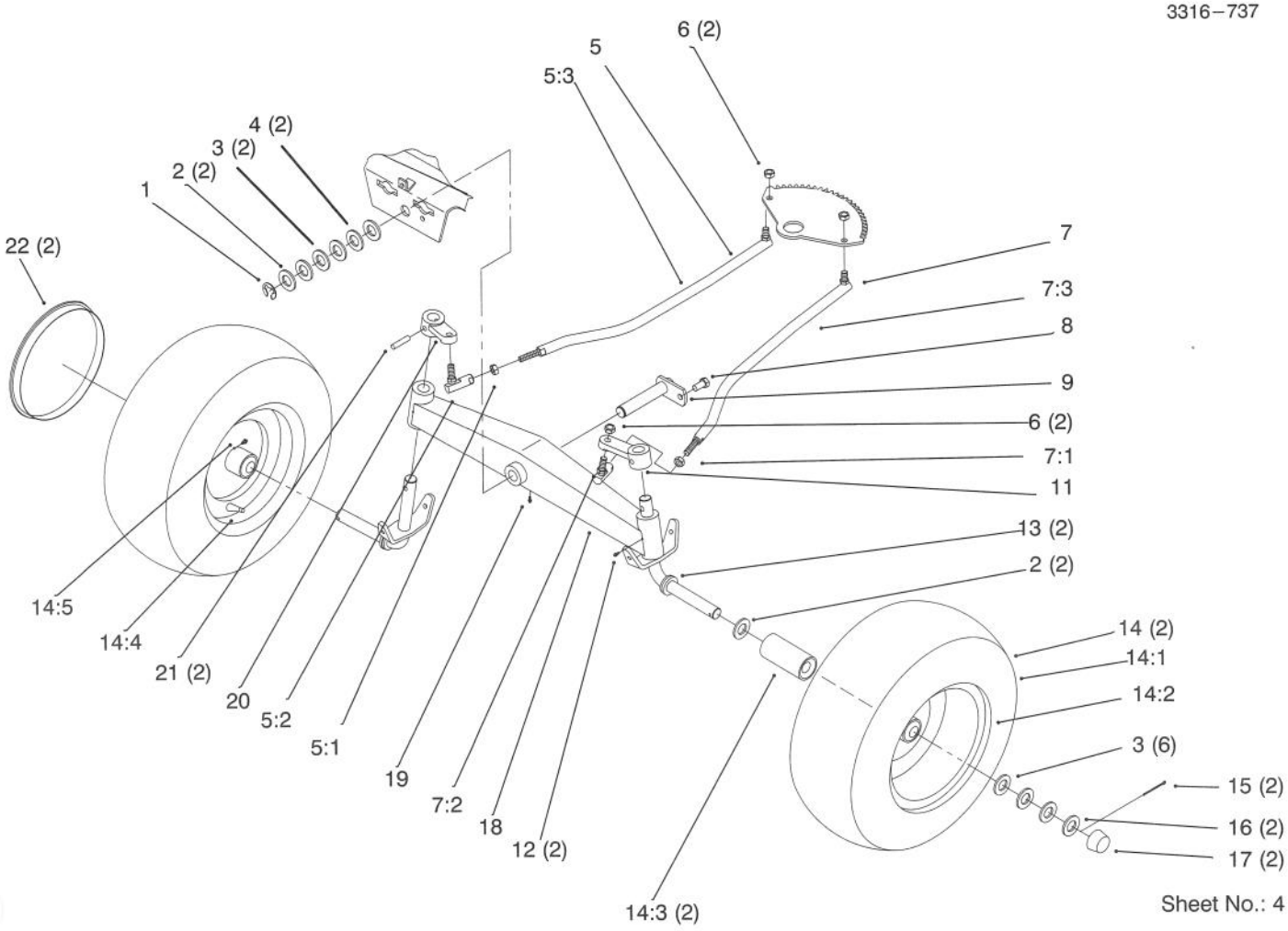

Sheet No.: 4

Front Axle

Ref. No.	Part No.	Qty.	Description
1	5618	1	E–Ring
2	5210	4	Washer–Shim
3	1278	8	Washer–Shim
4	9202324	2	Washer–10 GA
5	92–6883	1	Steering Link RH
☆5:1		1	Nut–HJ
5:2	78–2920	1	Joint–Ball
5:3	78–5801	1	Joint–Ball RH W/ Jam Nut
6	9150026	4	Nut–Lock
7	92–6884	1	Steering Link LH
☆7:1		1	Nut–HJ
7:2	78–2920	1	Joint–Ball
7:3	78–5811	1	Joint–Ball LH W/ Jam Nut
8	9267154	1	Screw
9	92–7057–03	1	Pin–Front
11	78–1940–01	1	Arm–Front Spindle RH
12	302–5	2	Fitting–Grease
13	78–2601–01	2	Spindle
☆14		2	Wheel & Tire ASM
14:1	117127	2	Tire
14:2	78–1680	2	Wheel
14:3	110513	4	Bearing–Wheel
14:4	5108	2	Valve–Tire Tubeless
15	3272–17	2	Pin–Cotter
16	28–2480	2	Washer–Flat
17	61–9780	2	Hubcap

☆ Not serviced

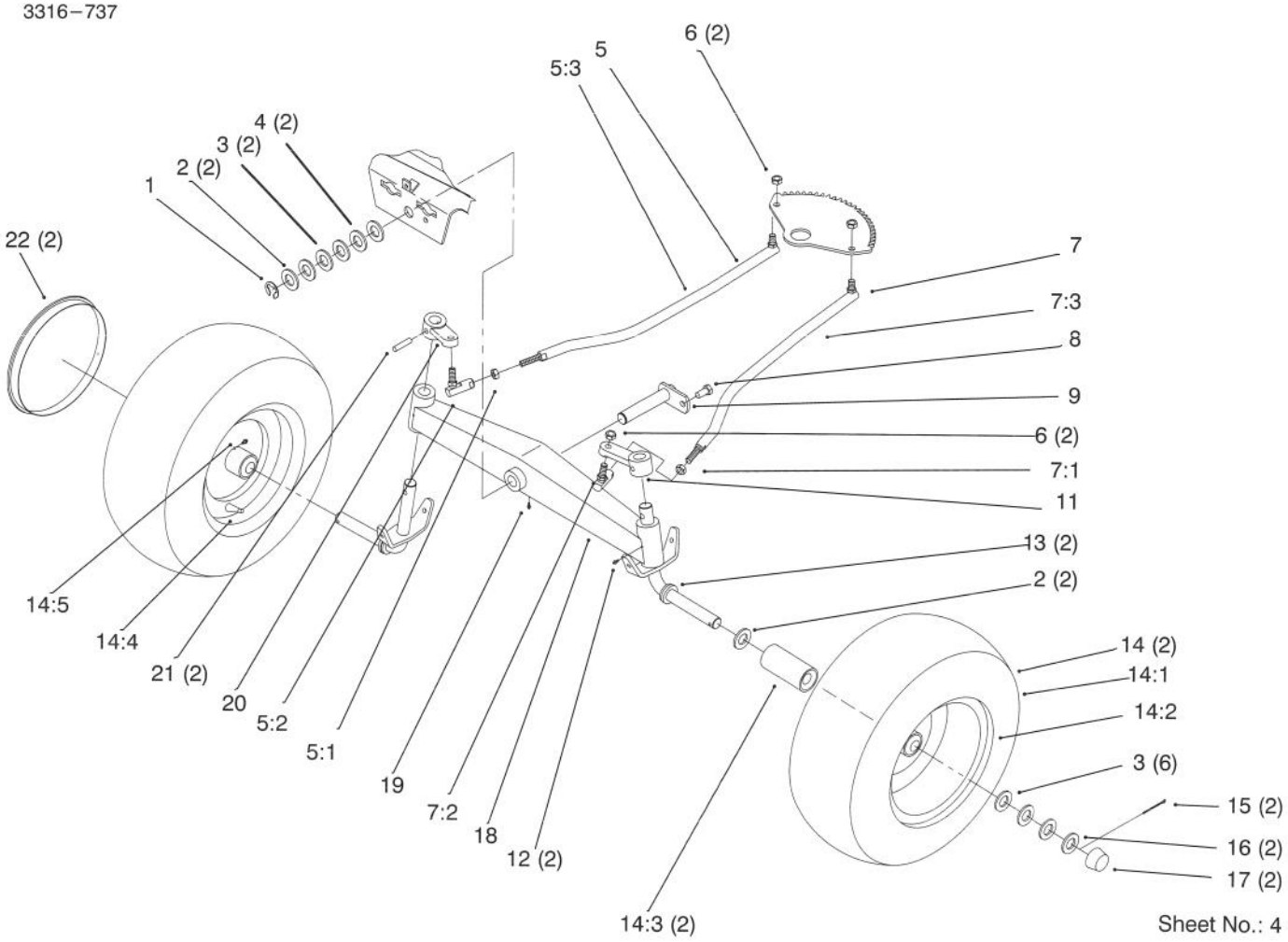

Front Axle

Ref. No.	Part No.	Qty.	Description
18	78–7960–01	1	Axle–Front
19	1481	1	Fitting–Grease 45 DEG
20	78–1950–01	1	Arm–Front Spindle LH
21	933270	2	Pin–Roll
22	114427	2	Hubcap (Only On: 72083)

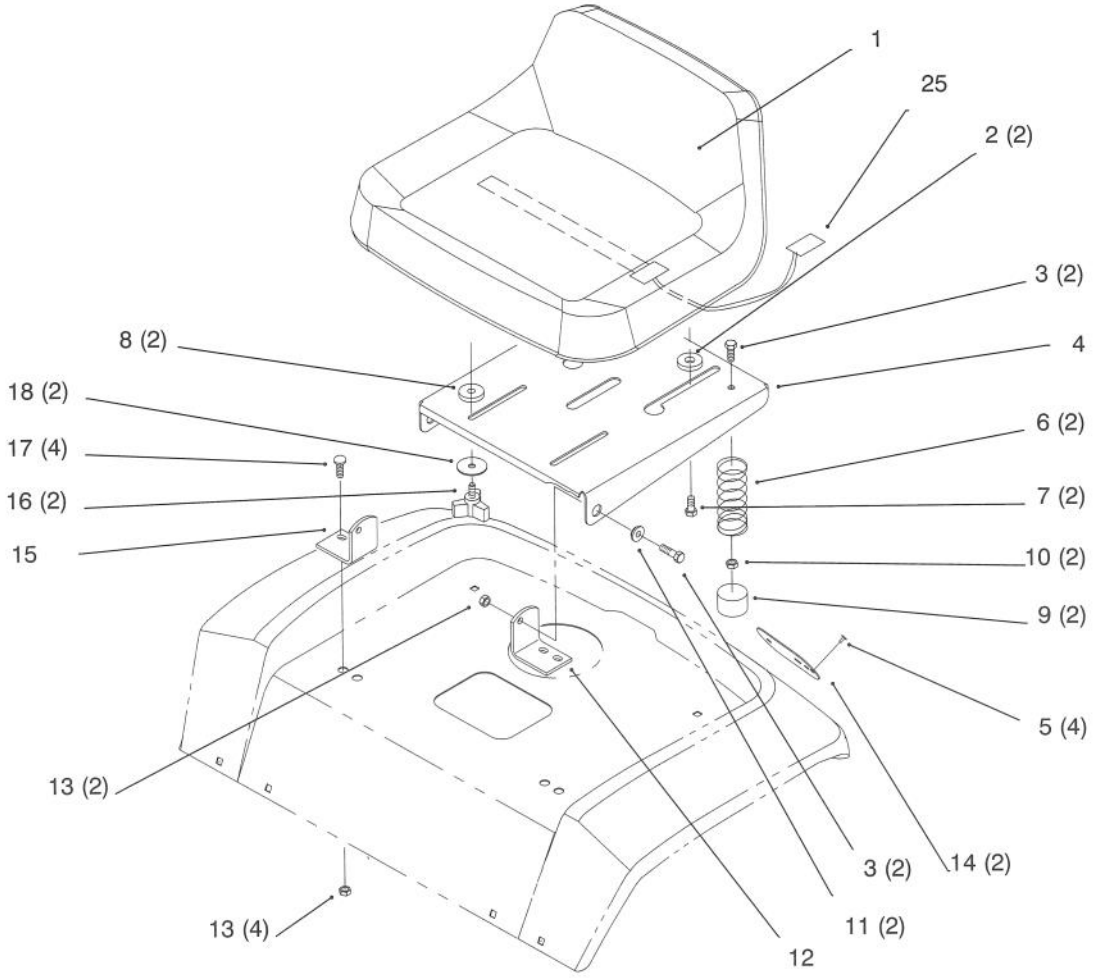

Sheet No.: 18

Seat

Ref. No.	Part No.	Qty.	Description
1	88–3950	1	Seat (Only On: 72042, 72043)
1	92–6511	1	Seat (Only On: 72062, 72063, 72083, 72103)
2	92–6750	2	Spacer–Nylon
3	322–5	4	Screw–HH
4	92–6972–03	1	Support–Seat
5	3290–282	4	Pop Rivet
6	92–7054	2	Spring–Compression
7	92–6986	2	Bolt–Shoulder
8	109989	2	Spacer
9	701178	2	Cap–Protector
10	3296–58	2	Nut–Flange
11	105503	2	Bushing
12	79–0970–03	1	Bracket–Pivot LH
13	3296–29	6	Nut–Hex Lock
14	106557	2	Reflecter
15	79–0950–03	1	Bracket–Pivot RH
16	700806	2	Knob
17	3230–2	4	Screw–CARR
18	5–4460	2	Washer–Fender
25	38–1420	1	Switch–Seat (Beam)

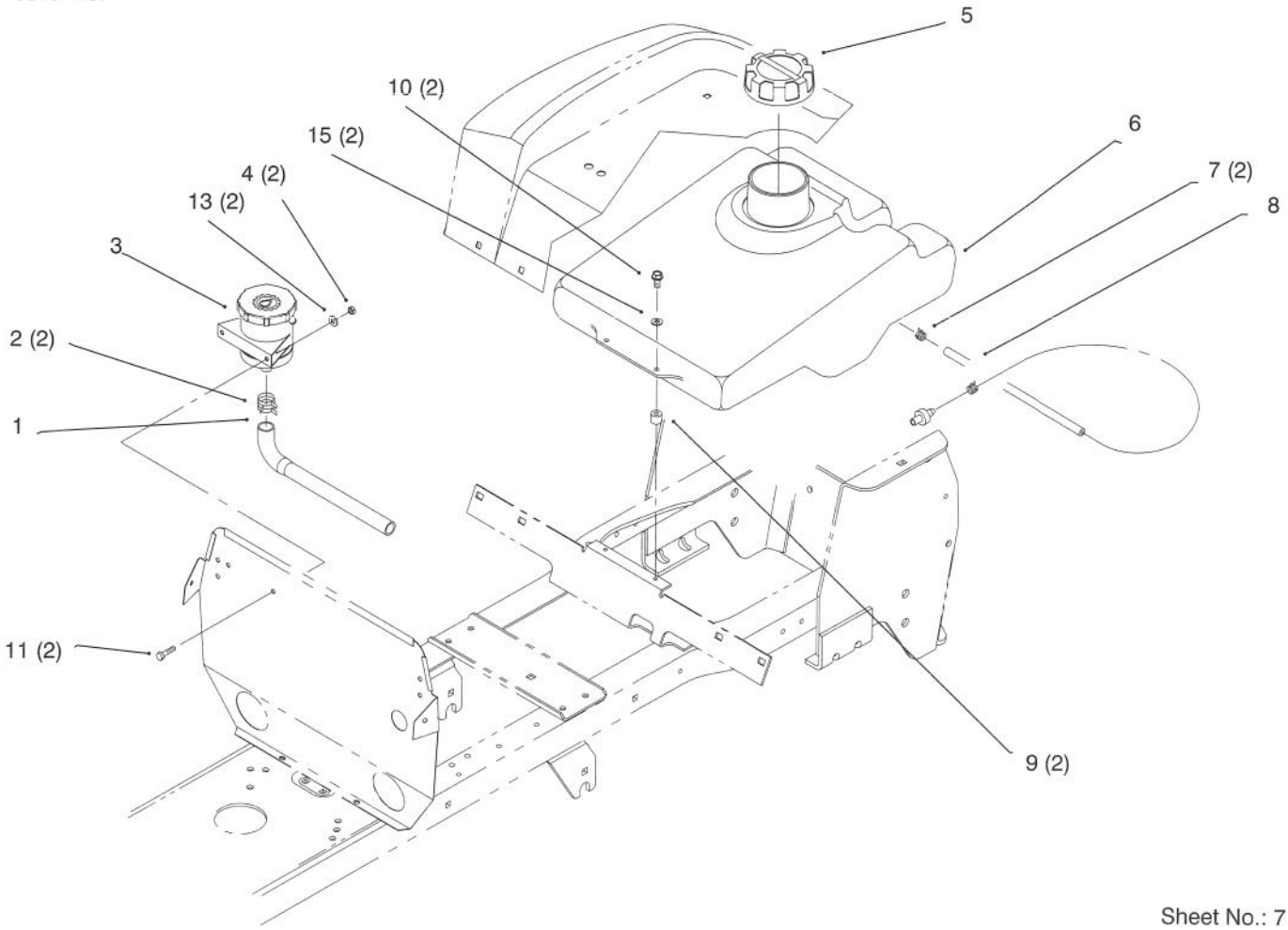

Sheet No.: 7

Fuel Tank and Hydro Reservoir

Ref. No.	Part No.	Qty.	Description
1	92–6737	1	Hose (Only On: 72043, 72103, 72063, 72083)
2	2412–34	2	Clamp–Hose (Only On: 72043, 72103, 72063, 72083)
3	79–3500	1	Reservoir (Only On: 72043, 72103, 72063, 72083)
4	3296–42	2	Nut–Hex Lock (Only On: 72043, 72103, 72063, 72083)
5	88–3980	1	Gas Cap ASM
6	92–6506	1	Tank–Gas
7	2412–98	2	Clamp–Hose
8	92–6754	1	Hose–Fuel Line (Only On: 72043, 72042, 72063, 72062)
8	93–1627	1	Hose–Fuel Line (Only On: 72103, 72083)
9	93–1144	2	Spacer–Fuel Tank (Only On: 72043, 72103, 72063, 72083)
10	32104–96	2	Screw–HHST (Only On: 72043, 72103, 72063, 72083)
10	32144–4	2	Screw–TAP (Only On: 72042, 72062)
11	321–4	2	Screw–HH (Only On: 72043, 72103, 72063, 72083)
13	3256–22	2	Washer–Flat (Only On: 72043, 72103, 72063, 72083)
15	2356–22	2	Washer–Flat (Only On: 72043, 72103, 72063, 72083)

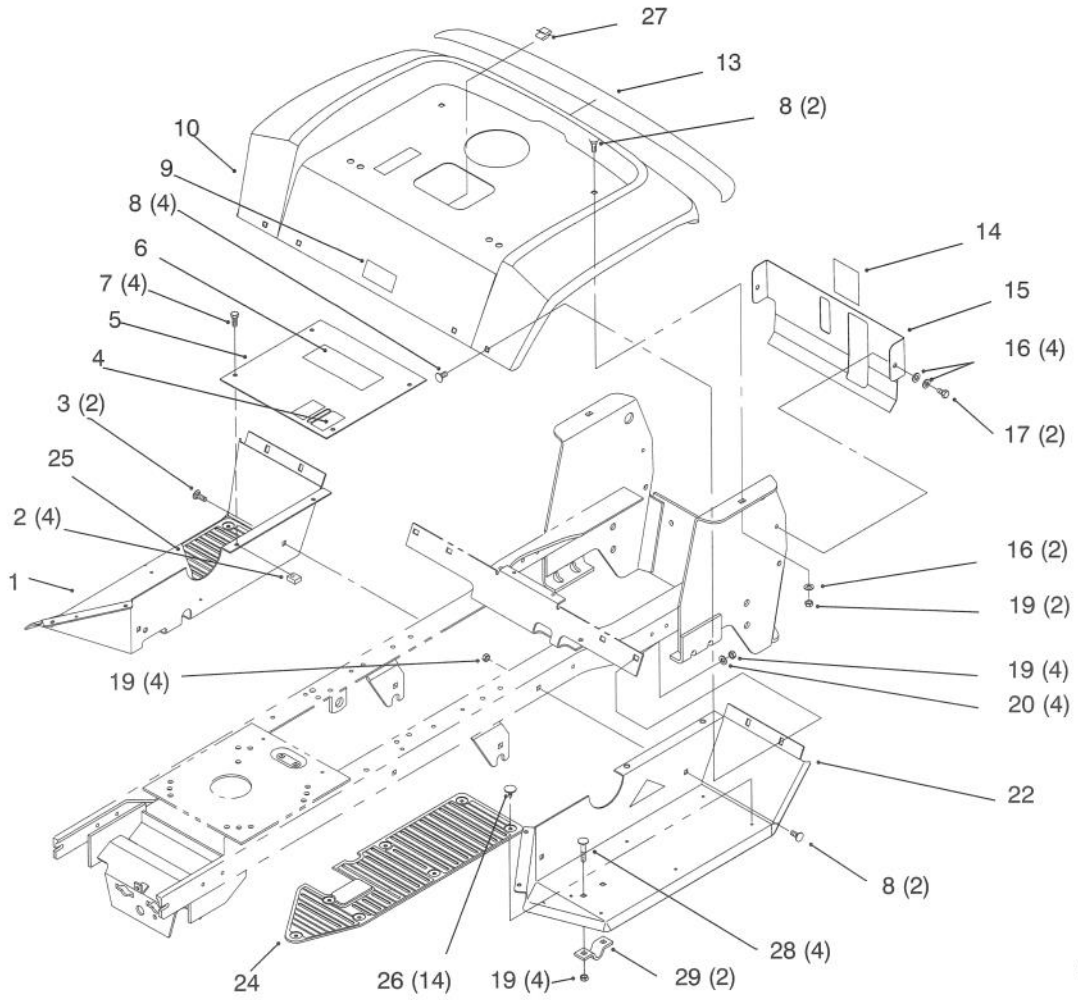

Sheet No.: 17

Fender and Footrest

Ref. No.	Part No.	Qty.	Description
1	92–6744–01	1	Footrest–RH (Only On: 72042, 72062)
1	92–6747–01	1	Footrest–RH (Only On: 72043, 72103, 72063, 72083)
2	92–6876	4	Nut–Retainer
3	3230–23	2	Screw–CARR
4	92–6725	1	Decal–HOC (Only On: 72042, 72043, 72083)
4	92–7092	1	Decal–HOC (Only On: 72103, 72063, 72062)
5	93–0489–01	1	Plate–Footrest W/Decal
6	92–8946	1	Decal–Danger
7	92–7020	4	Screw–TTH
8	3230–2	8	Screw–CARR
9	76–1340	1	Decal–USA (Only On: 72042, 72043, 72083)
10	92–6795–01	1	Fender
13	92–6730	1	Decal–Rear Fender
14	92–6727	1	Decal–Fuel Level
15	92–6713–03	1	Cover–Rear
16	3256–23	6	Washer–Flat
17	9266934	2	Screw–HWHTF
19	3296–29	14	Nut–Hex Lock
20	3256–71	4	Washer–Flat
22	92–6745–01	1	Footrest–LH (Only On: 72042, 72062)
22	92–6746–01	1	Footrest–LH (Only On: 72043, 72103, 72063, 72083)
24	92–6687	1	Mat–Foot RH (Only On: 72043, 72103, 72063, 72083)
24	92–6689	1	Mat–Foot RH (Only On: 72042, 72062)
25	92–6688	1	Mat–Foot LH (Only On: 72043, 72103, 72063, 72083)
25	92–6690	1	Mat–Foot LH (Only On: 72042, 72062)
26	3290–479	14	Fastener–Panel

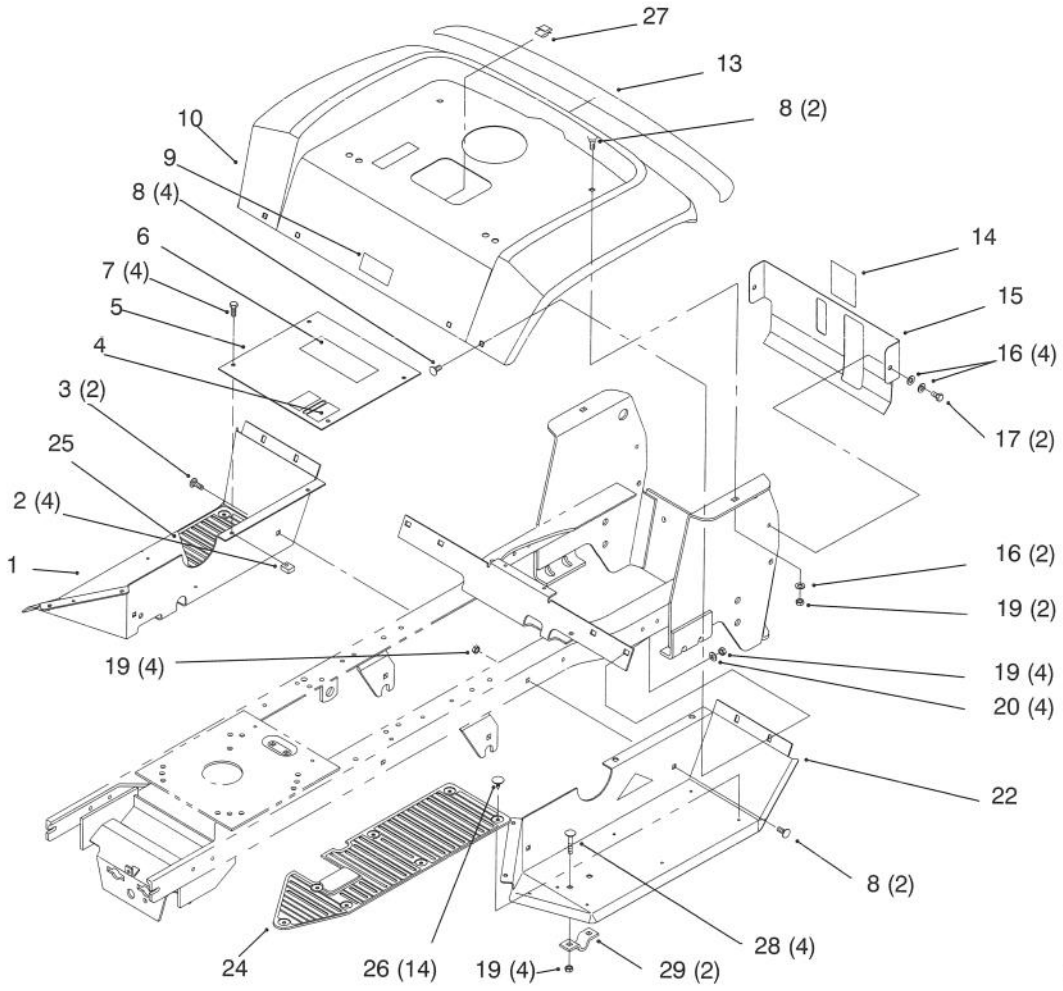

Sheet No.: 17

Fender and Footrest

Ref. No.	Part No.	Qty.	Description
27	702366	1	Clip–Wire Retainer
28	3230–20	4	Bolt–CARR
29	106288	2	Clamp

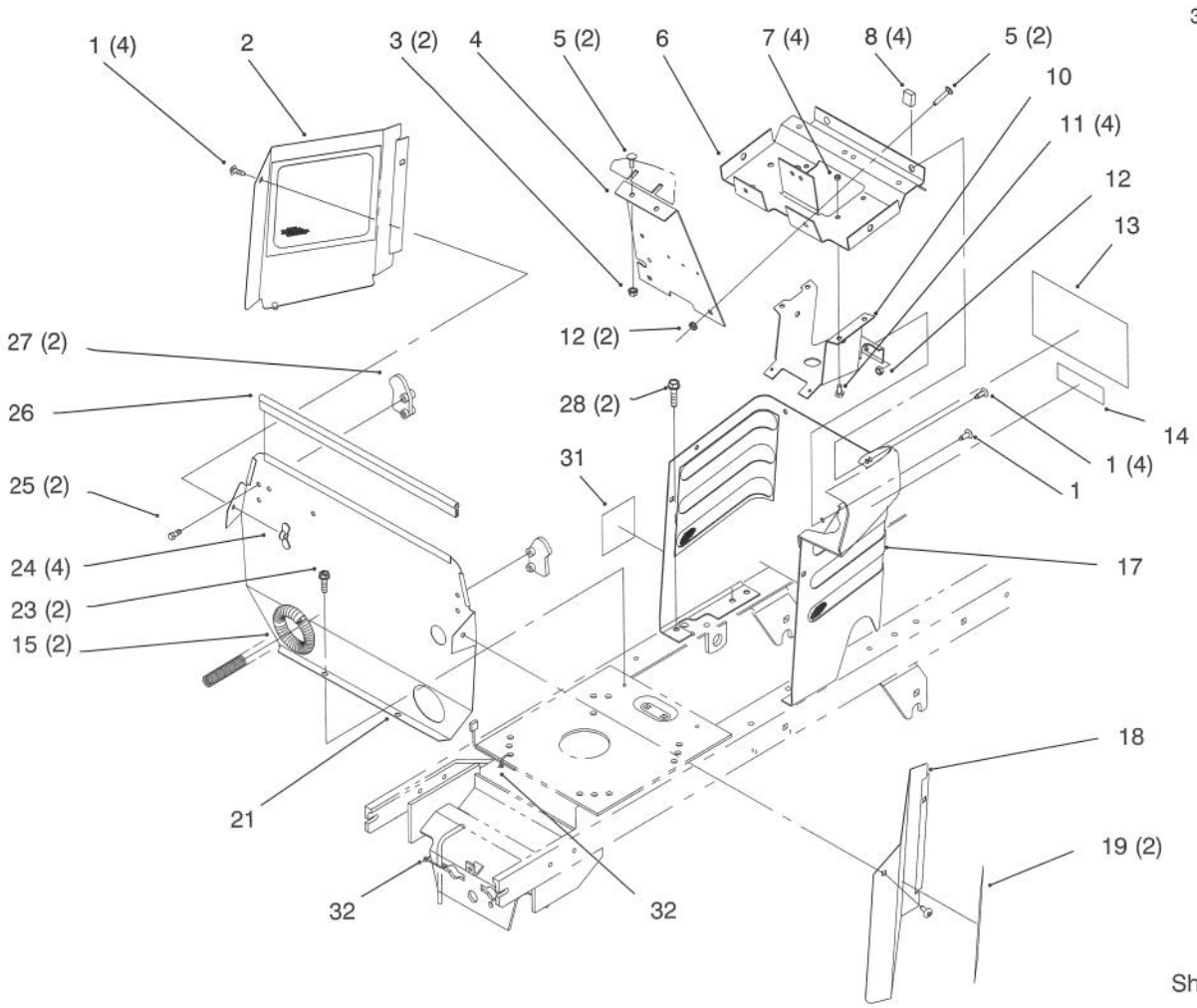

Hoodstand and Firewall

Ref. No.	Part No.	Qty.	Description
1	92–7020	9	Screw–TTH
2	92–6937–03	1	Cover–Side RH
3	32149–2	2	Nut–Hex
4	92–6793–03	1	Panel–Support Dash
5	3229–11	4	Bolt–CARR
6	92–6859–03	1	Support–Dash
7	3296–8	4	Nut–Lock
8	92–6860	4	Nut–Retainer
10	92–6778–03	1	Support–Column
11	321–4	4	Screw–HH
12	3296–42	3	Nut–Hex Lock
13	92–7089	1	Decal–Slope/Park Brake (Only On: 72062)
13	92–7091	1	Decal–Slope/Park Brake (Only On: 72063, 72103)
13	93–0301	1	Decal–Slope/Park Brake (Only On: 72042)
13	93–0302	1	Decal–Slope/Park Brake (Only On: 72043, 72083)
14	83–6620	1	Decal–Instruction
15	24–7924	2	Cover–Drive Shaft
17	93–0485–03	1	Hoodstand W/Decals (Only On: 72042)
17	93–0486–03	1	Hoodstand W/Decals (Only On: 72043, 72083)
17	93–0487–03	1	Hoodstand W/Decals (Only On: 72062)
17	93–0488–03	1	Hoodstand W/Decals (Only On: 72063, 72103)
18	92–6936–03	1	Cover–Side LH
19	92–6733	2	Decal–264–6 (Only On: 72042, 72062)
19	92–6734	2	Decal–264–H (Only On: 72043, 72063)
19	92–6735	2	Decal–266–H (Only On: 72083, 72103)
21	92–6771–03	1	Baffle–Rear

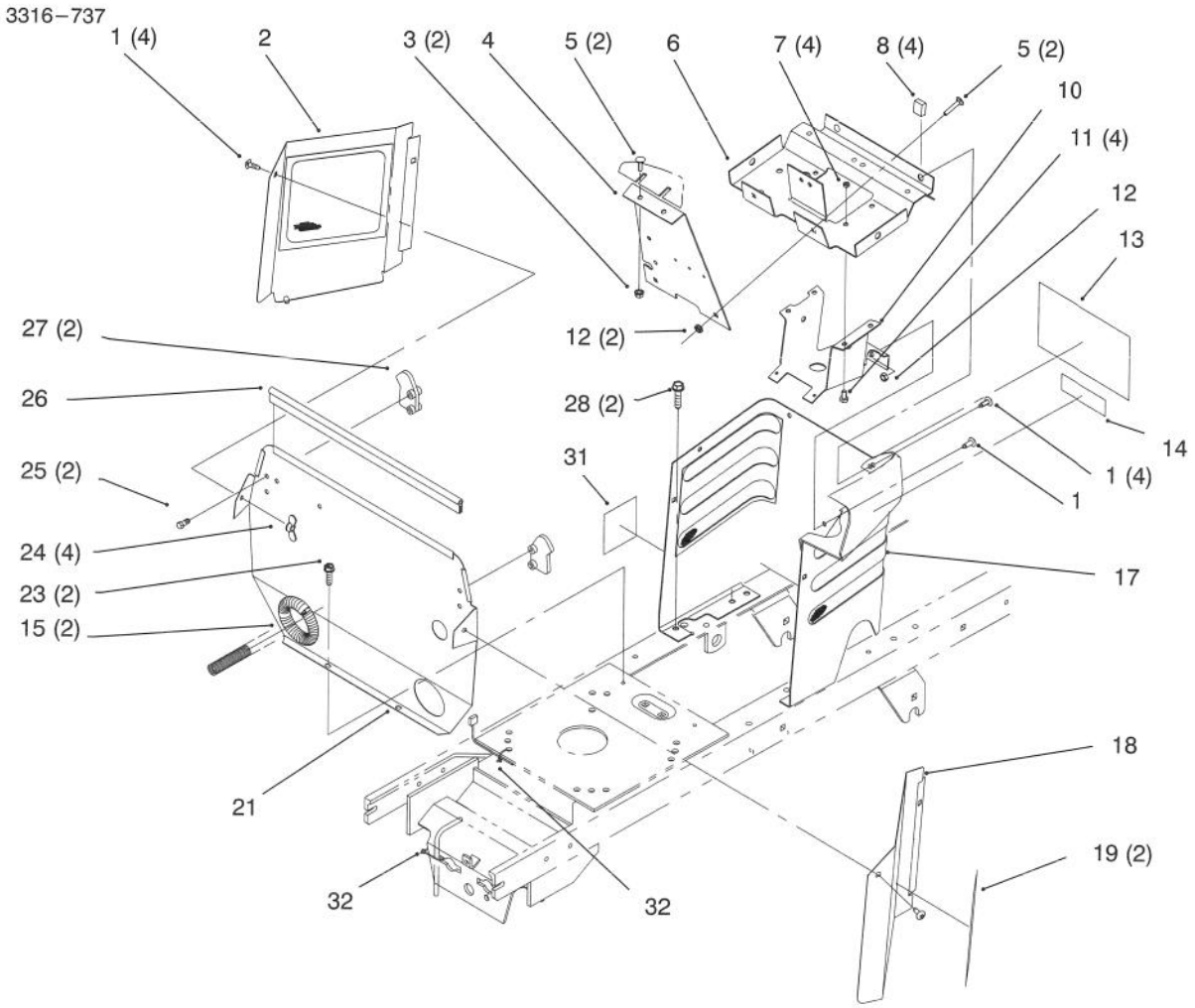

Sheet No.: 10

Hoodstand and Firewall

Ref. No.	Part No.	Qty.	Description
23	32144–4	2	Screw–TAP
24	32103–22	4	Nut–Wing
25	46–8093	2	Screw–TAP
26	93–1131	1	Trim–Seal
27	92–6960	2	Latch–Hood
28	32144–14	2	Screw–HH
31	114621	1	Decal–Noise (Only On: 72103, 72063, 72062)
32	614249	2	Tie Strap

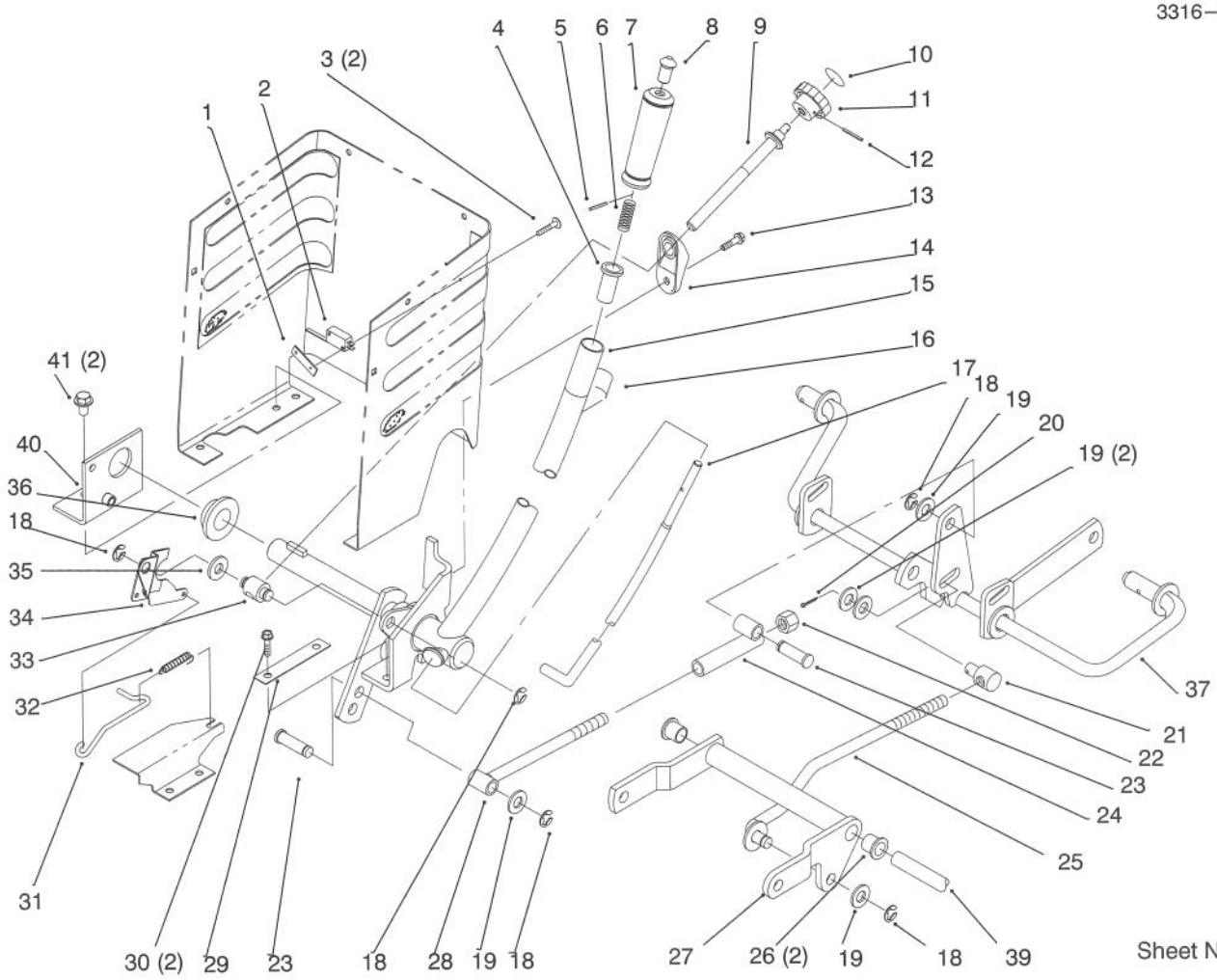

Sheet No.: 11

Lift Lever and Height of Cut

Ref. No.	Part No.	Qty.	Description
1	3290–354	1	Nut–Speed
2	88–9930	1	Switch–Micro
3	147665	2	Screw
4	8130	1	Retainer–Spring
5	933148	1	Pin–Spirol
6	3624	1	Spring–Compression
7	92–6710	1	Grip–Handle
8	92–6711	1	Tip–Rod
9	92–6965	1	Rod–HOC
10	78–9740	1	Decal–HOC Knob
11	115593	1	Knob
12	933141	1	Pin–Spirol
13	32144–4	1	Screw–TAP
14	92–6794	1	Wedge–HOC Adjust
15	92–6874–03	1	Lever–Lift
16	112168	1	Decal–Lift (Only On: 72042, 72043, 72083)
16	92–7085	1	Decal–Lift (Only On: 72103, 72063, 72062)
17	92–6977–03	1	Rod–Lift Lever
18	32120–47	5	Ring–Retaining
19	3256–26	5	Washer–Flat
20	3272–6	1	Pin–Cotter
21	8870	1	Trunnion
22	3296–23	1	Nut–HH
23	79–1250	2	Pin
24	78–7390	1	Link
25	78–2431	1	Rod

3316–737

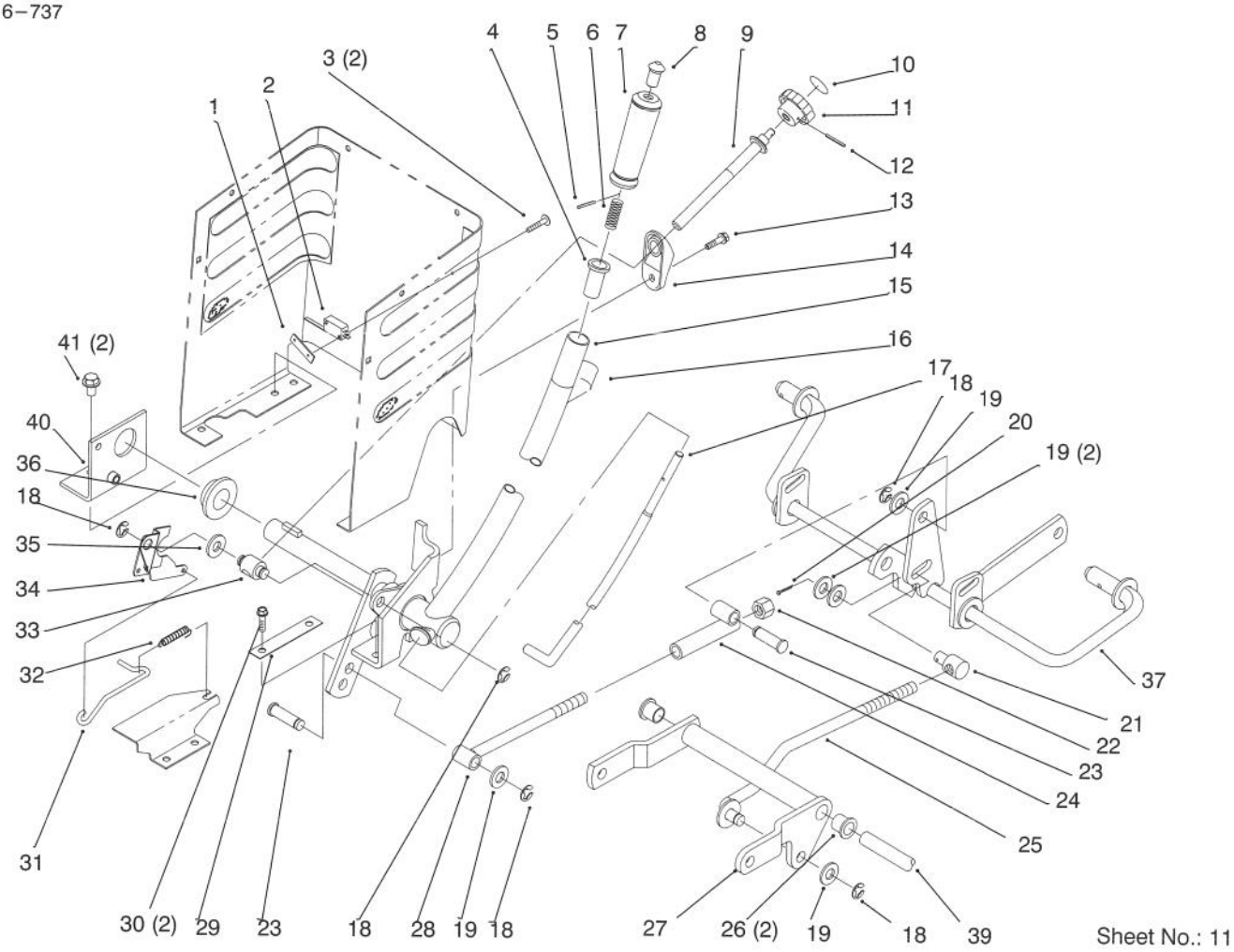

Sheet No.: 11

Lift Lever and Height of Cut

Ref. No.	Part No.	Qty.	Description
26	256–90	2	Bushing–Flange
27	92–6855–03	1	Arm
28	78–7360	1	Rod
29	78–6810–03	1	Plate
30	32144–14	2	Screw–HH
31	92–6978	1	Rod–HOC Indicator
32	92–7007	1	Spring–Extension
33	78–2140	1	Trunnion
34	92–6979	1	Plate–HOC Gage
35	9202634	1	Washer–Flat
36	106269	1	Bearing–Flange
37	79–3401–03	1	Gage Shaft
39	93–1356	1	Shaft
40	92–6893–03	1	Bracket–Pivot
41	32144–14	2	Screw–HH (Only On: 72043, 72103, 72063, 72083)
41	32144–70	2	Screw–TAP (Only On: 72042, 72062)

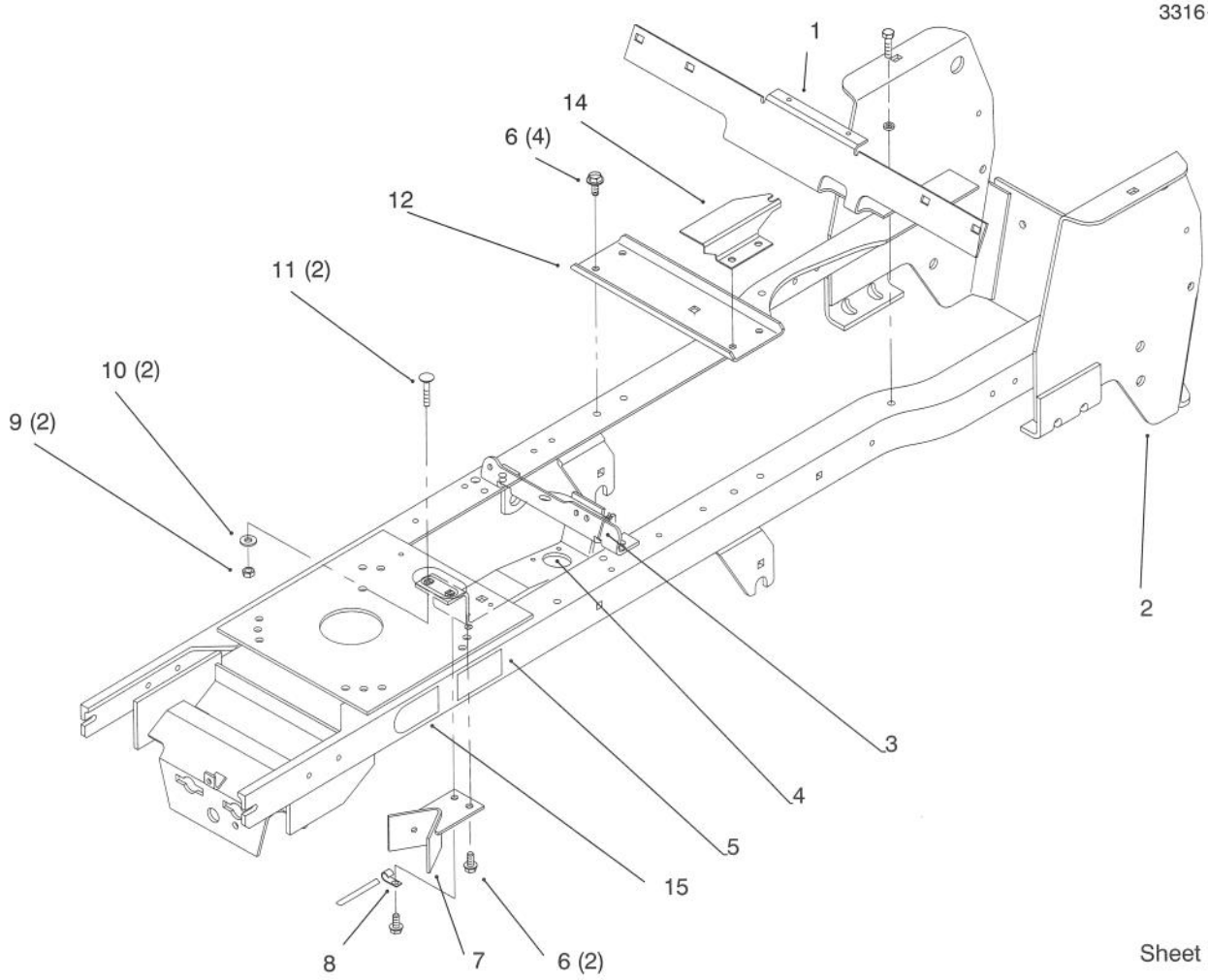

Sheet No.: 14

Frame

Ref. No.	Part No.	Qty.	Description
1	92–6674–03	1	Support–Fender
2	92–6660–03	1	Frame
3	614249	1	Tie Strap
4	92–6992–03	1	Bracket–Steering
5	79–6730	2	Decal–Belt Install (Only On: 72042, 72043, 72083)
5	79–7020	2	Decal–Belt Install (Only On: 72103, 72063, 72062)
6	32144–14	6	Screw–HH
7	78–2491–03	1	Stop–PTO
8	8830	1	Retainer–"j"
9	3296–29	2	Nut–Hex Lock
10	3256–23	2	Washer–Flat
11	3230–2	2	Screw–CARR
12	92–6868–03	1	Bracket–Idler
14	92–6964–03	1	Bracket–HOC
15	92–8747	2	Decal–Attach–A–Matic

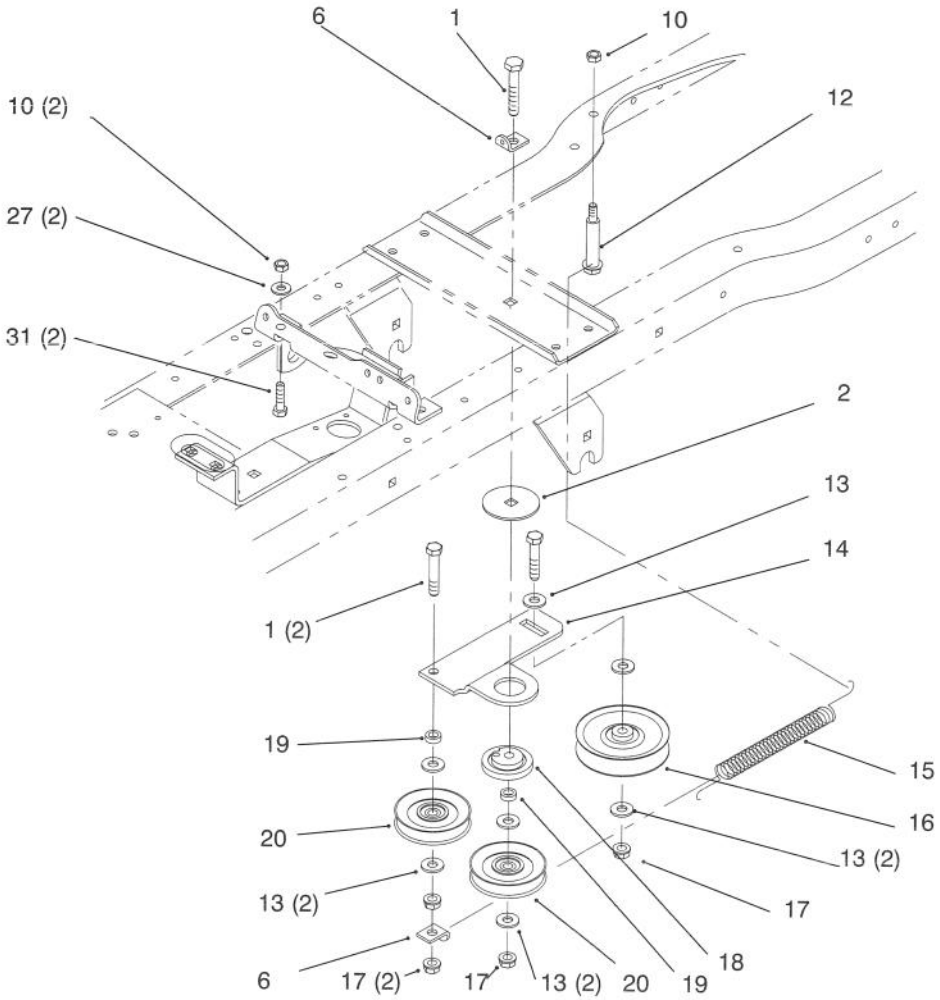

Sheet No.: 3

Hydro Drive Components

Ref. No.	Part No.	Qty.	Description
1	323–10	3	Screw (Only On: 72043, 72103, 72063, 72083)
2	111419	1	Washer–Bearing (Only On: 72043, 72103, 72063, 72083)
6	2534	2	Clip–Spring (Only On: 72043, 72103, 72063, 72083)
10	3296–29	3	Nut–Hex Lock (Only On: 72103, 72063, 72083, 72043)
12	88–4590	1	Bolt–Shoulder (Only On: 72043, 72103, 72063, 72083)
13	3256–24	7	Washer–Flat (Only On: 72043, 72103, 72063, 72083)
14	92–6900	1	Arm–Idler (Only On: 72043, 72103, 72063, 72083)
15	79–7530	1	Spring–Extension (Only On: 72043, 72103, 72063, 72083)
16	92–7101	1	Pulley–Flat Idler (Only On: 72043, 72103, 72063, 72083)
17	3296–39	4	Nut–Hex Lock (Only On: 72103, 72063, 72083, 72043)
18	111418	1	Bushing (Only On: 72043, 72103, 72063, 72083)
19	93–3658–03	2	Spacer (Only On: 72043, 72103, 72063, 72083)
20	92–7102	2	Pulley–Idler (Only On: 72043, 72103, 72063, 72083)
27	3256–23	2	Washer–Flat (Only On: 72103, 72063, 72083, 72043)
31	322–5	2	Screw–HH (Only On: 72043, 72103, 72063, 72083)

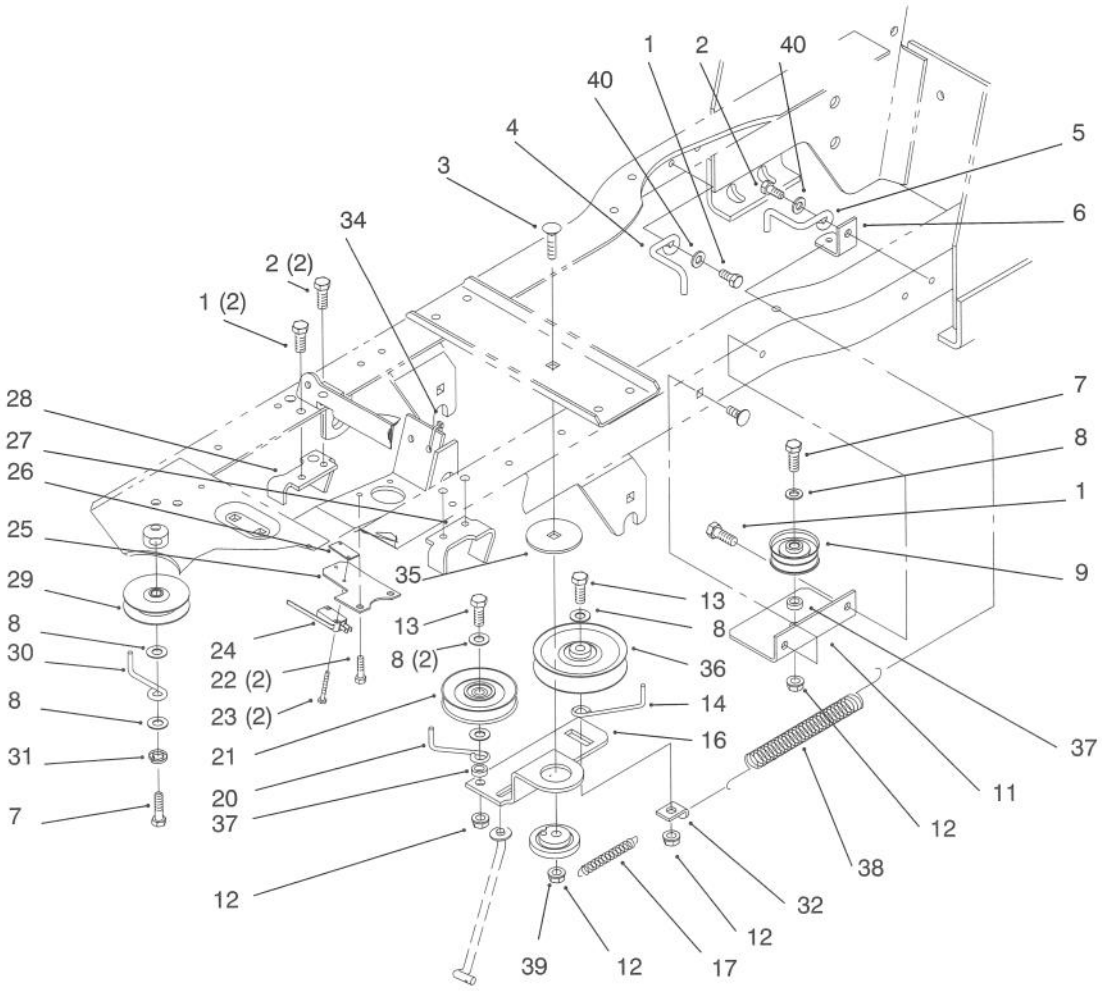

Sheet No.: 21

Gear Drive Components

Ref. No.	Part No.	Qty.	Description
1	32144–14	4	Screw–HH (Only On: 72042, 72062)
2	32144–70	3	Screw–TAP (Only On: 72042, 72062)
3	3231–25	1	Screw–CARR (Only On: 72042, 72062)
4	92–7001	1	Guide–Belt RH (Only On: 72042, 72062)
5	92–7002	1	Guide–Belt LH (Only On: 72042, 72062)
6	92–6891–03	1	Bracket–Idler Spring (Only On: 72042, 72062)
7	323–9	2	Screw–HH (Only On: 72042, 72062)
8	3256–24	6	Washer–Flat (Only On: 72042, 72062)
9	607978	1	Pulley–Idler (Only On: 72042, 72062)
11	92–6894–03	1	Bracket–Idler Rear (Only On: 72042, 72062)
12	3296–39	4	Nut–Hex Lock (Only On: 72042, 72062)
13	323–10	2	Screw (Only On: 72042, 72062)
14	79–0390	1	Guide–Belt (Only On: 72042, 72062)
16	78–6771	1	Arm–Idler (Only On: 72042, 72062)
17	107788	1	Spring–Extension (Only On: 72042, 72062)
20	79–0400	1	Guide–Belt (Only On: 72042, 72062)
21	92–7102	1	Pulley–Idler (Only On: 72042, 72062)
22	32144–4	2	Screw–TAP (Only On: 72042, 72062)
23	147665	2	Screw (Only On: 72042, 72062)
24	88–9930	1	Switch–Micro (Only On: 72042, 72062)
25	92–6932–03	1	Bracket–Microswitch (Only On: 72042, 72062)
26	3290–354	1	Nut–Speed (Only On: 72042, 72062)
27	92–6670	1	Bracket–Clutch (Only On: 72042, 72062)
28	92–6671	1	Bracket–Brake (Only On: 72042, 72062)
29	93–0320	1	Pulley–Idler (Only On: 72042, 72062)
30	79–1790	1	Guide–Belt (Only On: 72042, 72062)

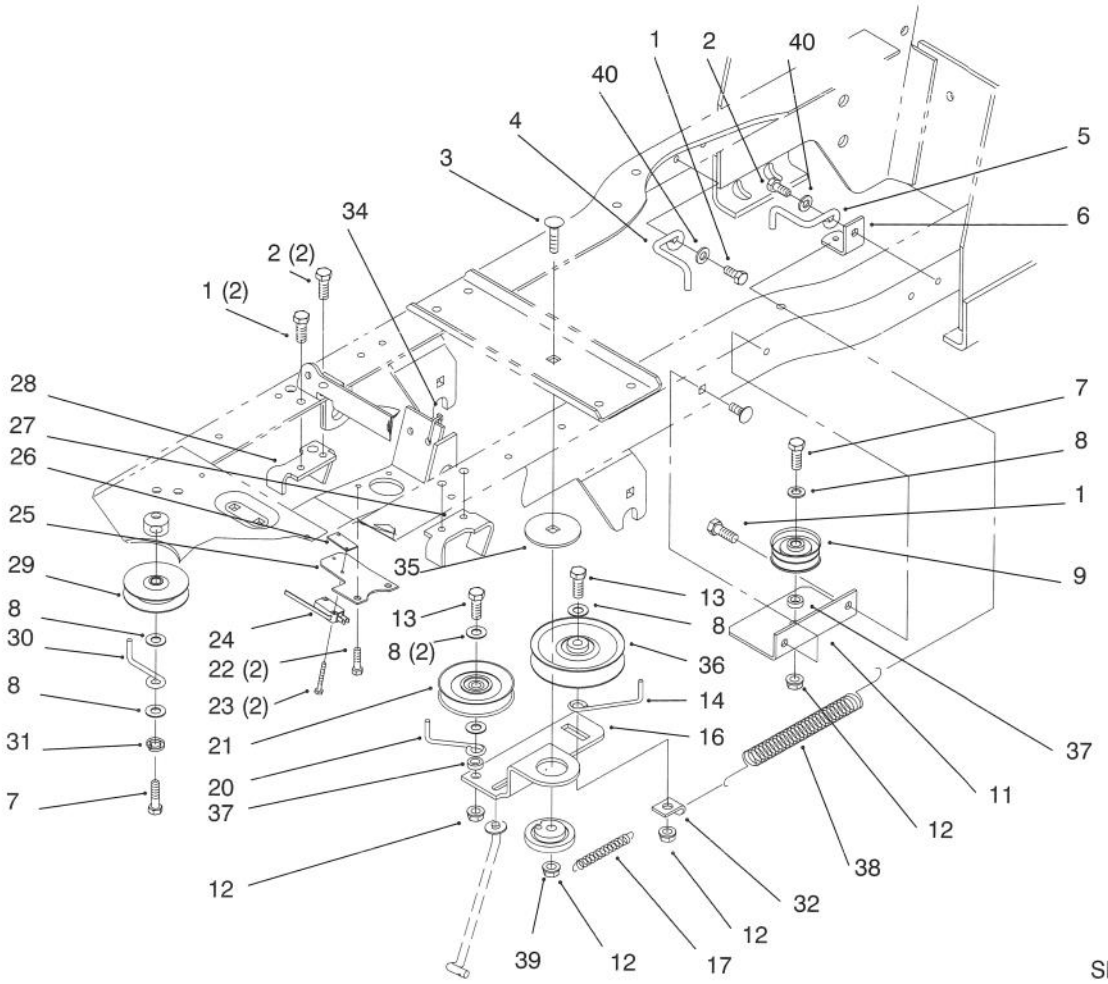

Sheet No.: 21

Gear Drive Components

Ref. No.	Part No.	Qty.	Description
31	3253–5	1	Washer–Lock (Only On: 72042, 72062)
32	2534	1	Clip–Spring (Only On: 72042, 72062)
34	614249	1	Tie Strap (Only On: 72042, 72062)
35	111419	1	Washer–Bearing (Only On: 72042, 72062)
36	92–7101	1	Pulley–Flat Idler (Only On: 72042, 72062)
37	93–3658–03	2	Spacer (Only On: 72042, 72062)
38	79–7530	1	Spring–Extension (Only On: 72042, 72062)
39	111418	1	Bushing (Only On: 72042, 72062)
40	3256–23	2	Washer–Flat (Only On: 72042, 72062)

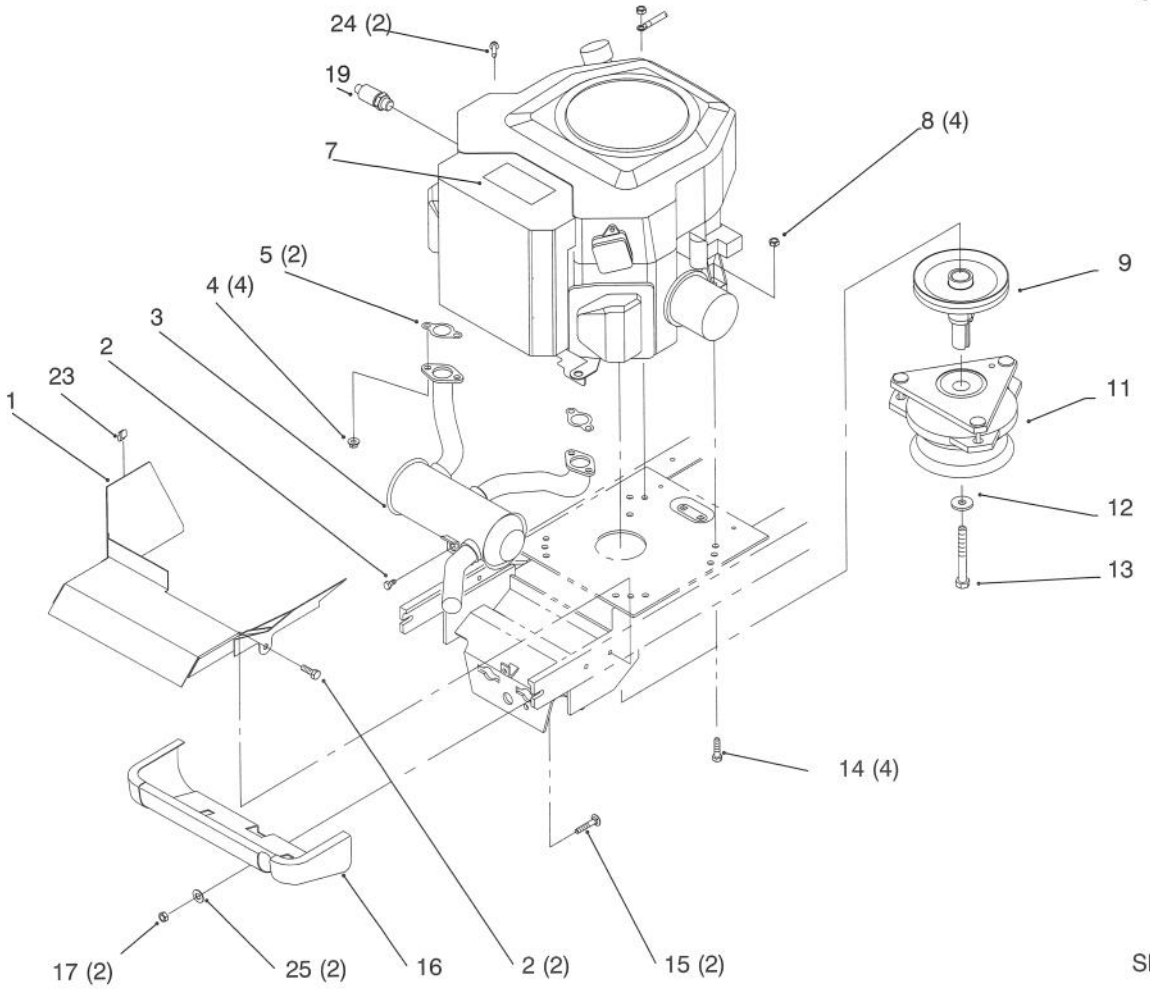

Sheet No.: 5

Twin Cylinder Engine, Muffler, and P.T.O.

Ref. No.	Part No.	Qty.	Description
1	92–6879–03	1	Baffle–Muffler (Only On: 72103, 72083)
2	9266934	3	Screw–HWHTF (Only On: 72103, 72083)
3	92–6861	1	Muffler (Only On: 72103, 72083)
4	92–6780	4	Nut–HHF (Only On: 72103, 72083)
5	93–0350	2	Gasket–Exhaust (Only On: 72103, 72083)
7	92–6763	1	Decal–Toro Power Plus 16 (Only On: 72083, 72103)
8	3296–29	4	Nut–Hex Lock (Only On: 72103, 72083)
9	92–6888	1	Pulley (Only On: 72083, 72103)
11	92–6885	1	Clutch–PTO (Only On: 72103, 72083)
12	112843	1	Washer–PTO (Only On: 72103, 72083)
13	9114466	1	Screw HH (Only On: 72103, 72083)
14	322–9	4	Screw–HH (Only On: 72103, 72083)
15	3231–22	2	Bolt–CARR (Only On: 72103, 72083)
16	92–6867–03	1	Shield–Muffler (Only On: 72103, 72083)
17	3296–39	2	Nut–Hex Lock (Only On: 72103, 72083)
19	92–6877	1	Valve–Oil Drain (Only On: 72103, 72083)
23	702366	1	Clip–Wire Retainer (Only On: 72103, 72083)
24	32144–118	2	Screw–PPH (Only On: 72103, 72083)
25	3256–24	2	Washer–Flat (Only On: 72103, 72083)

3316–737

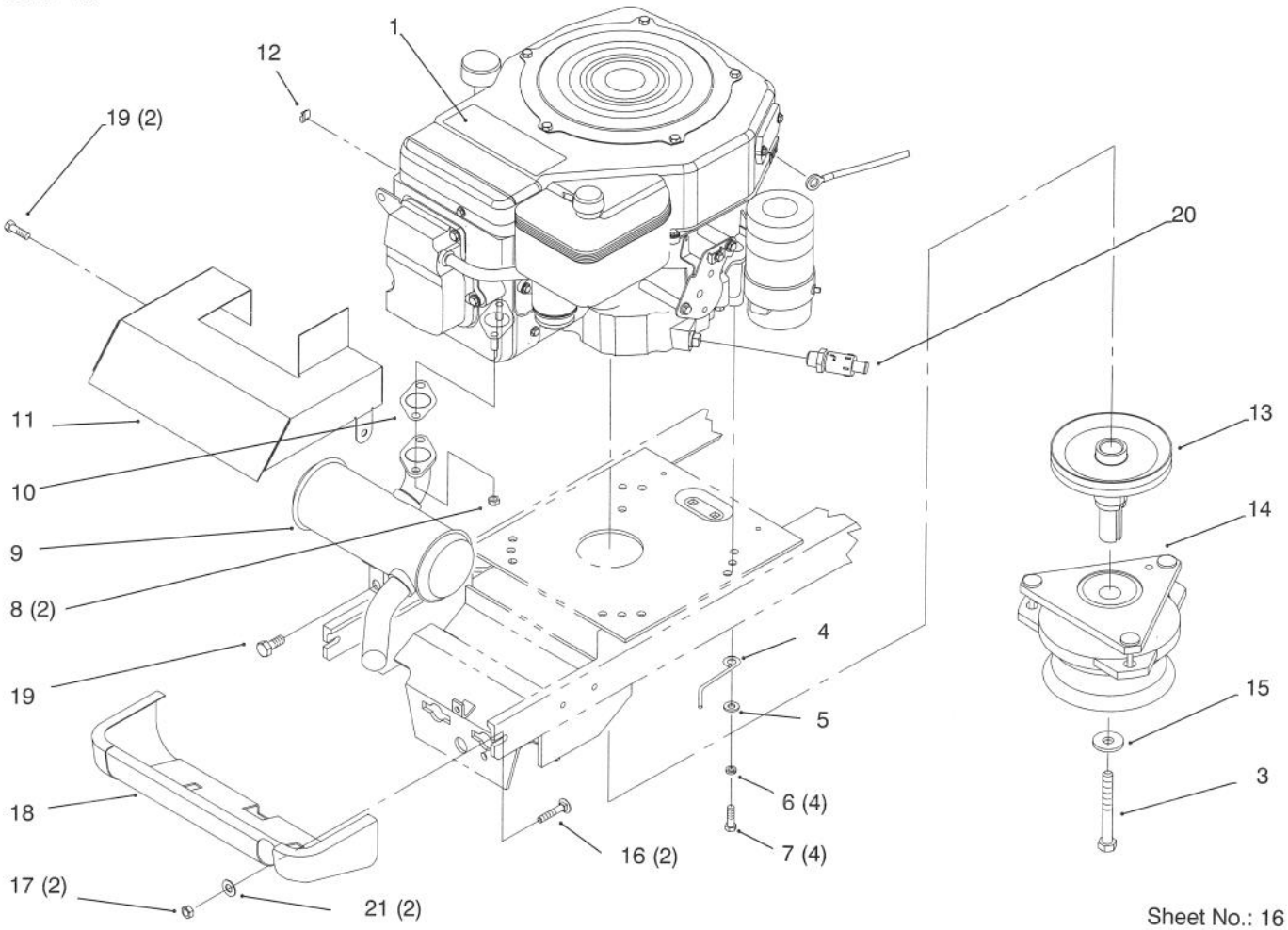

Sheet No.: 16

Single Cylinder Engine, Muffler, and P.T.O.

Ref. No.	Part No.	Qty.	Description
1	92–6764	1	Decal–Toro Power Plus 14 (Only On: 72042, 72062, 72043, 72063)
3	115203	1	Screw–HH (Only On: 72043, 72042, 72063, 72062)
4	79–0390	1	Guide–Belt (Only On: 72042, 72062)
5	3256–23	1	Washer–Flat (Only On: 72042, 72062)
6	3253–4	4	Washer–Lock (Only On: 72043, 72042, 72063, 72062)
7	48–7730	4	Screw–HH (Only On: 72043, 72042, 72063, 72062)
8	92–6780	2	Nut–HHF (Only On: 72043, 72042, 72063, 72062)
9	92–6862	1	Muffler (Only On: 72043, 72042, 72063, 72062)
10	92–6716	1	Gasket–Exhaust (Only On: 72043, 72042, 72063, 72062)
11	92–6878–03	1	Baffle–Muffler (Only On: 72043, 72042, 72063, 72062)
12	702366	1	Clip–Wire Retainer (Only On: 72043, 72042, 72063, 72062)
13	92–6888	1	Pulley (Only On: 72043, 72063)
13	93–0321	1	Pulley–Engine (Only On: 72042, 72062)
14	92–6885	1	Clutch–PTO (Only On: 72043, 72042, 72063, 72062)
15	112843	1	Washer–PTO (Only On: 72043, 72042, 72063, 72062)
16	3231–22	2	Bolt–CARR (Only On: 72043, 72042, 72063, 72062)
17	3296–39	2	Nut–Hex Lock (Only On: 72043, 72042, 72063, 72062)
18	92–6867–03	1	Shield–Muffler (Only On: 72043, 72042, 72063, 72062)
19	9266934	3	Screw–HWHTF (Only On: 72043, 72042, 72063, 72062)
20	92–6877	1	Valve–Oil Drain (Only On: 72043, 72042, 72063, 72062)
21	3256–24	2	Washer–Flat (Only On: 72043, 72042, 72063, 72062)

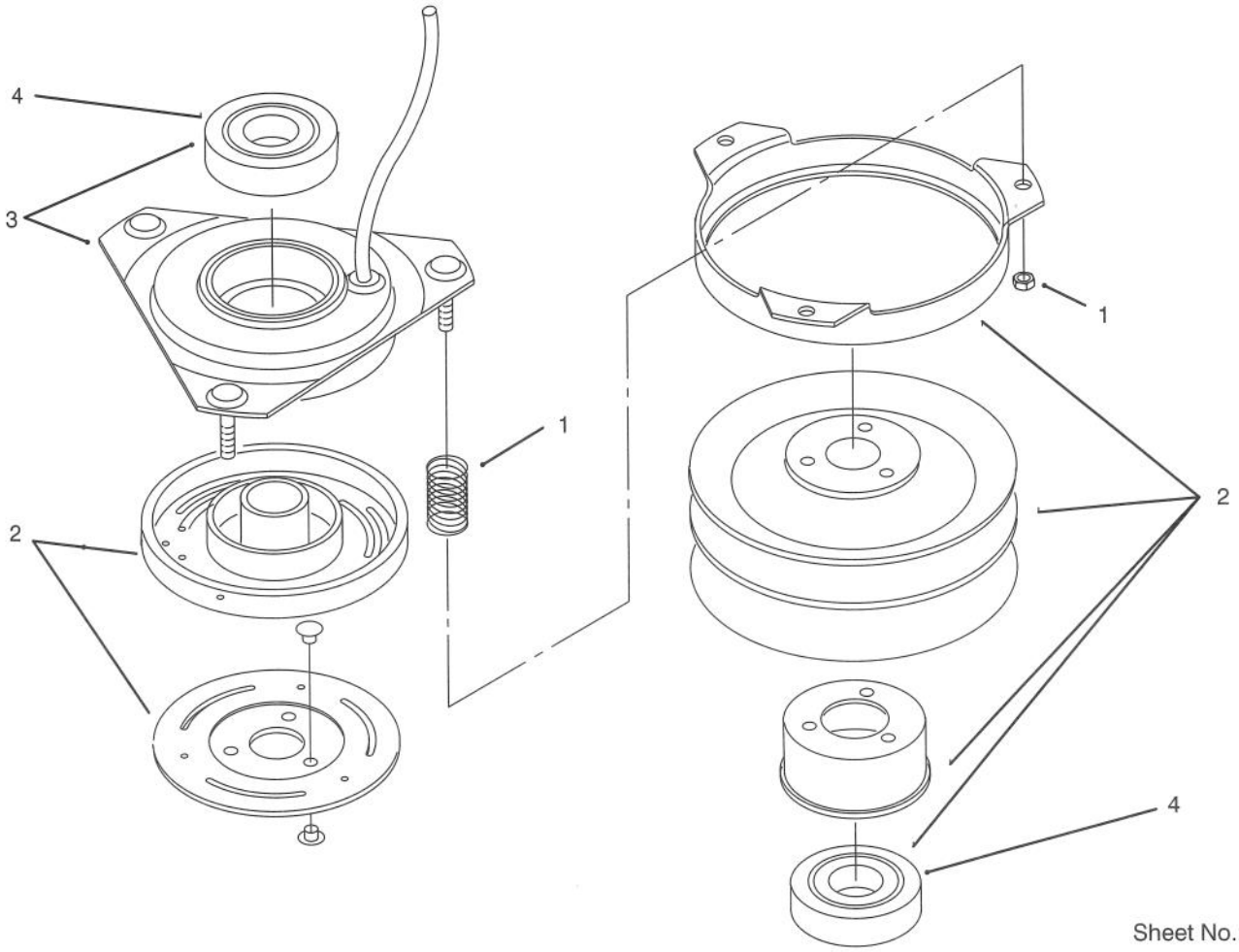

Sheet No.: 502

Clutch 92–6885

Ref. No.	Part No.	Qty.	Description
1	92–3014	3	Nut & Spring ASM
2	92–3015	1	Rotor ASM W/Bearing
3	92–3016	1	Field ASM W/Bearing
4	114064	2	Bearing–Elec Clutch

3316–737

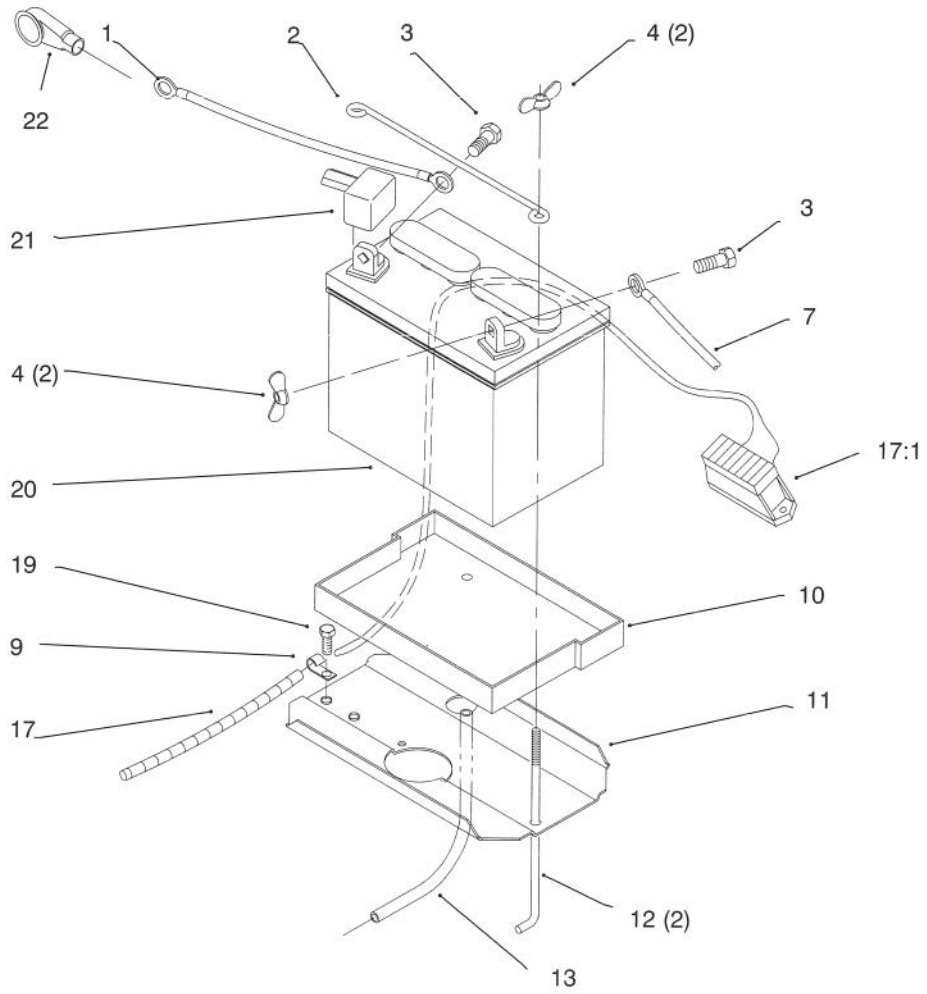

Sheet No.: 6

Battery

Ref. No.	Part No.	Qty.	Description
1	92–6989	1	Cable–Battery Red (Only On: 72103, 72083)
1	92–6990	1	Cable–Battery Red (Only On: 72043, 72042, 72063, 72062)
2	117316	1	Rod–Battery Hold Down
3	321–4	2	Screw–HH
4	32103–22	4	Nut–Wing
7	111078	1	Cable–Battery Black (Only On: 72043, 72042, 72063, 72062)
7	93–0324	1	Cable–Battery Black (Only On: 72103, 72083)
9	8830	1	Retainer–"j"
10	106948	1	Tray–Battery
11	78–6820–03	1	Plate–Battery
12	109547	2	Hook–Battery
13	114720	1	Tube–Battery Drn
17	92–6904	1	Harness–Wire (Only On: 72083, 72103)
17	92–6905	1	Harness–Wire (Only On: 72043, 72063)
17	92–6907	1	Harness–Wire (Only On: 72042, 72062)
17:1	120930	1	Fuse Holder
19	32144–14	1	Screw–HH
20	105842	1	Battery (Only On: 72042, 72062, 72043, 72063)
20	115877	1	Battery (Only On: 72103, 72083)
21	109553	1	Boot–Battery Cable
22	93–3190	1	Boot–Terminal Insulator (Only On: 72103, 72083)

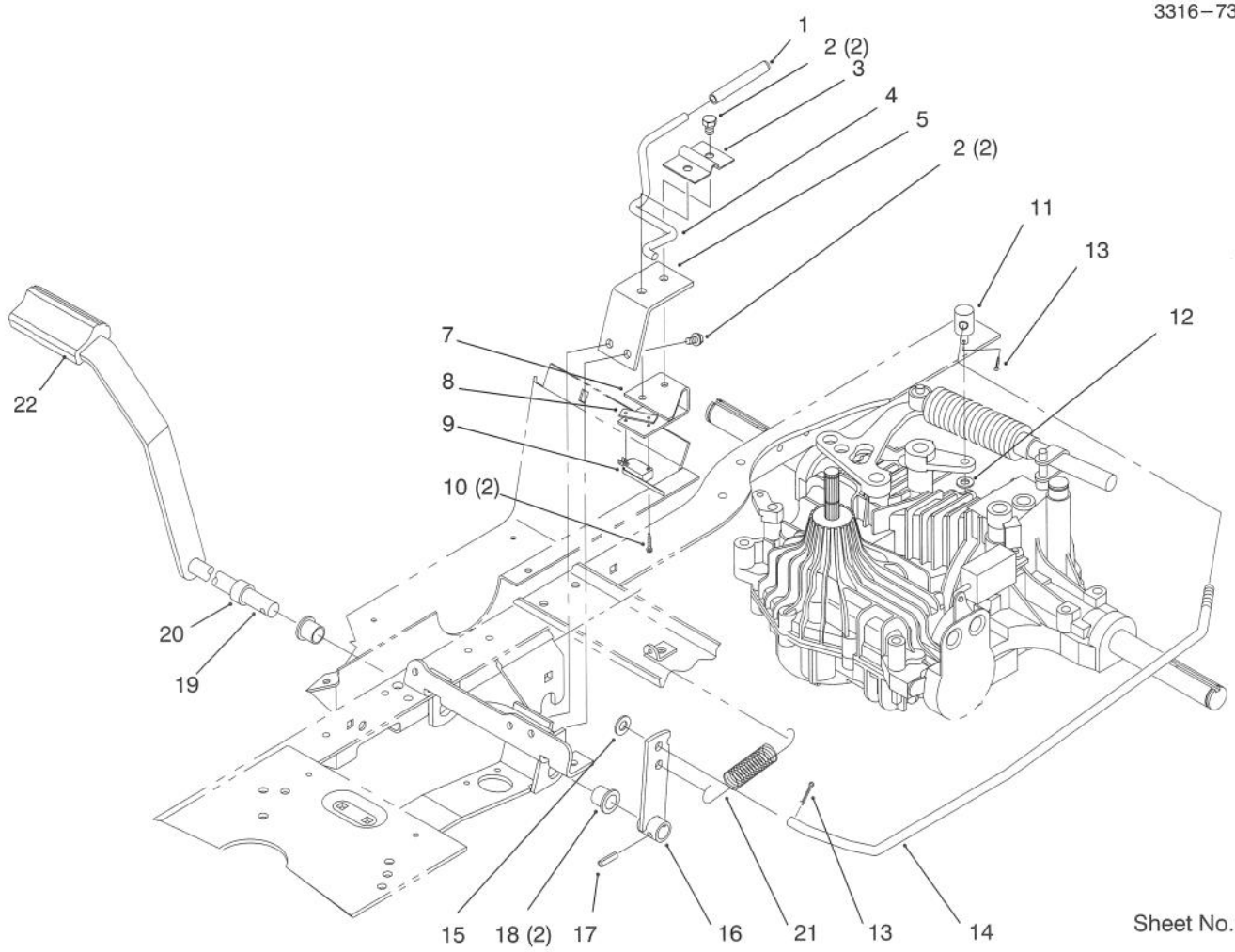

Sheet No.: 12

Hydro Brake

Ref. No.	Part No.	Qty.	Description
1	92–7009	1	Grip–Parking Brake (Only On: 72043, 72103, 72063, 72083)
2	32144–14	4	Screw–HH (Only On: 72043, 72103, 72063, 72083)
3	92–7000–03	1	Bracket–Park Brake (Only On: 72043, 72103, 72063, 72083)
4	93–3167	1	Rod–Park Brake (Only On: 72043, 72103, 72063, 72083)
5	92–7004–03	1	Support–Park Brake (Only On: 72043, 72103, 72063, 72083)
7	92–6984–03	1	Bracket–Brake (Only On: 72043, 72103, 72063, 72083)
8	3290–354	1	Nut–Speed (Only On: 72043, 72103, 72063, 72083)
9	88–9930	1	Switch–Micro (Only On: 72043, 72103, 72063, 72083)
10	147665	2	Screw (Only On: 72043, 72103, 72063, 72083)
11	92–6968	1	Trunnion–Brake (Only On: 72043, 72103, 72063, 72083)
12	3256–23	1	Washer–Flat (Only On: 72103, 72063, 72083, 72043)
13	3272–6	2	Pin–Cotter (Only On: 72043, 72103, 72063, 72083)
14	92–6988	1	Rod–Brake (Only On: 72043, 72103, 72063, 72083)
15	3256–24	1	Washer–Flat (Only On: 72043, 72103, 72063, 72083)
16	92–6948–03	1	Lever–Brake (Only On: 72043, 72103, 72063, 72083)
17	32121–69	1	Pin–Spring (Only On: 72043, 72103, 72063, 72083)
18	256–90	2	Bushing–Flange (Only On: 72043, 72103, 72063, 72083)
19	92–6951–03	1	Pedal–Brake (Only On: 72043, 72103, 72063, 72083)
20	92–6982	1	Spacer–Brake (Only On: 72043, 72103, 72063, 72083)
21	92–6995	1	Spring–Extension (Only On: 72043, 72103, 72063, 72083)
22	65–2920	1	Pad–Pedal (Only On: 72043, 72103, 72063, 72083)

3316–737

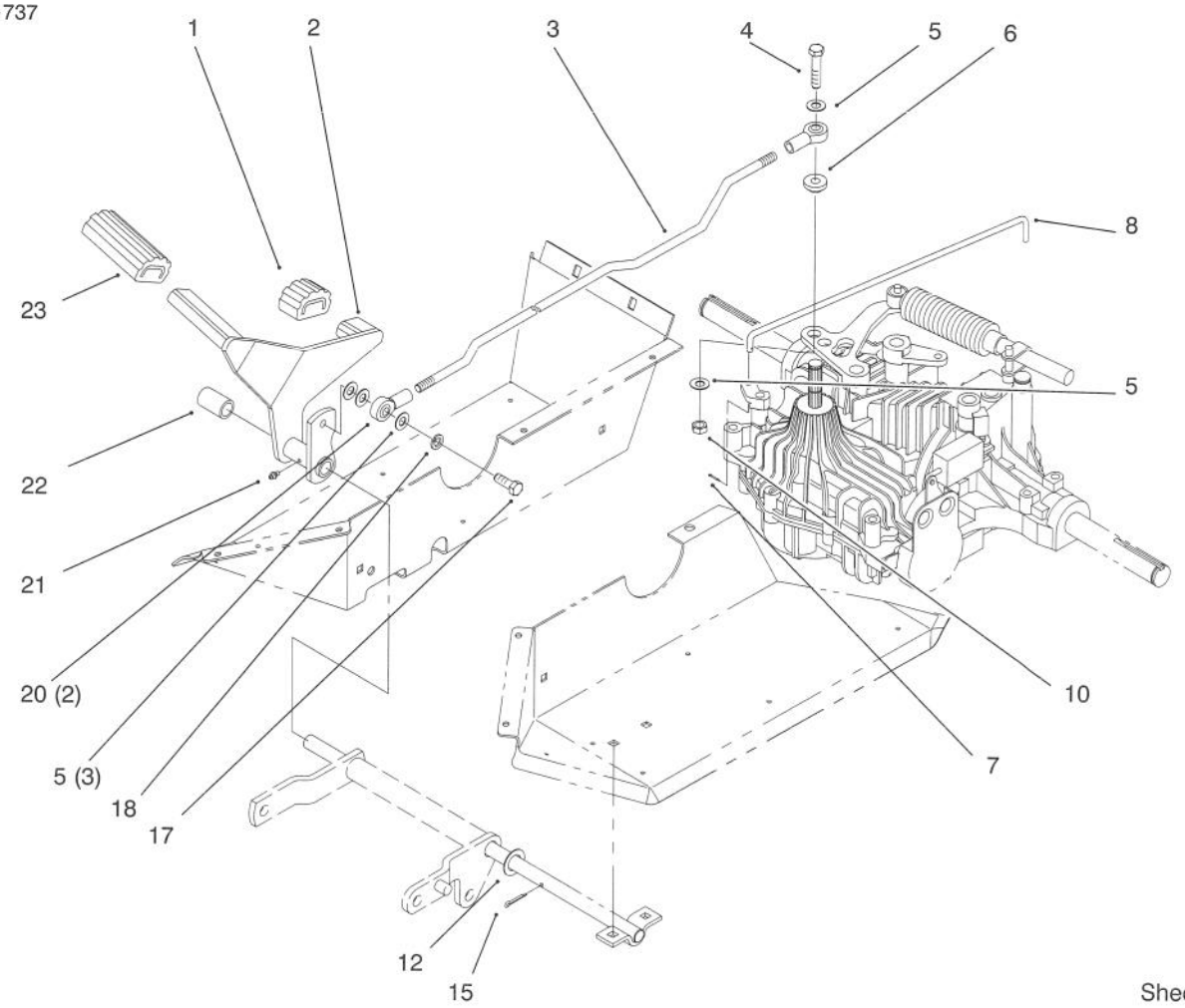

Sheet No.: 13

Hydro Control

Ref. No.	Part No.	Qty.	Description
1	92–6903	1	Pad–Pedal Reverse (Only On: 72043, 72103, 72063, 72083)
2	92–6913–03	1	Pedal–Hydro (Only On: 72043, 72103, 72063, 72083)
3	92–7018	1	Rod (Only On: 72043, 72103, 72063, 72083)
4	323–9	1	Screw–HH (Only On: 72043, 72103, 72063, 72083)
5	3256–24	5	Washer–Flat (Only On: 72043, 72103, 72063, 72083)
6	92–6962	1	Bushing (Only On: 72043, 72103, 72063, 72083)
7	3272–2	1	Pin–Cotter (Only On: 72043, 72103, 72063, 72083)
8	92–6970	1	Rod–Bypass (Only On: 72043, 72103, 72063, 72083)
10	3296–39	1	Nut–Hex Lock (Only On: 72103, 72063, 72083, 72043)
12	9202154	1	Washer–Flat (Only On: 72043, 72103, 72063, 72083)
15	3272–16	1	Pin–Cotter (Only On: 72043, 72103, 72063, 72083)
17	323–7	1	Screw (Only On: 72103, 72063, 72083, 72043)
18	3253–5	1	Washer–Lock (Only On: 72043, 72103, 72063, 72083)
20	92–7008	2	Rod End (Only On: 72043, 72103, 72063, 72083)
21	302–26	1	Fitting–Grease (Only On: 72043, 72103, 72063, 72083)
22	92–6966	1	Spacer–Hydro Pedal (Only On: 72043, 72103, 72063, 72083)
23	92–6902	1	Pad–Pedal Forward (Only On: 72043, 72103, 72063, 72083)

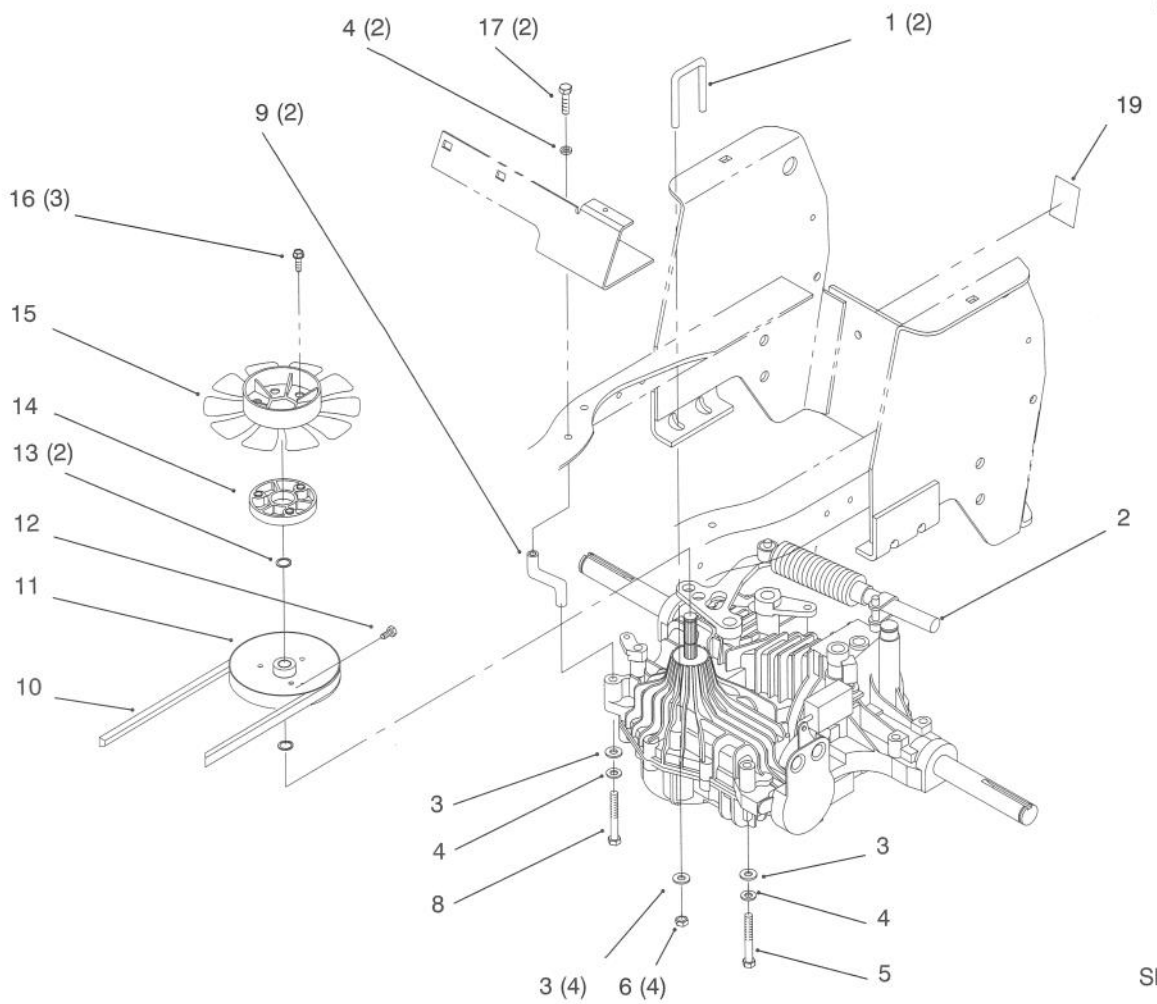

Sheet No.: 15

Hydro Transaxle

Ref. No.	Part No.	Qty.	Description
1	92–6769	2	U–Bolt (Only On: 72043, 72103, 72063, 72083)
2	92–6762	1	Transaxle–Tuff Torq K61 (Only On: 72043, 72103, 72063, 72083)
3	3256–23	6	Washer–Flat (Only On: 72103, 72063, 72083, 72043)
4	3253–4	4	Washer–Lock (Only On: 72043, 72103, 72063, 72083)
5	322–12	1	Screw HH (Only On: 72043, 72103, 72063, 72083)
6	3296–29	4	Nut–Hex Lock (Only On: 72103, 72063, 72083, 72043)
8	322–11	1	Screw–HH (Only On: 72043, 72103, 72063, 72083)
9	92–6899	2	Strap–Torque (Only On: 72043, 72103, 72063, 72083)
10	92–6718	1	Belt–Hydro (Only On: 72043, 72063, 72083, 72103)
11	92–6686	1	Pulley (Only On: 72043, 72103, 72063, 72083)
12	3245–32	1	Screw–Set (Only On: 72043, 72103, 72063, 72083)
13	936118	2	Snap Ring (Only On: 72043, 72103, 72063, 72083)
14	92–6943	1	Spacer–Fan (Only On: 72043, 72103, 72063, 72083)
15	92–6742	1	Fan (Only On: 72043, 72103, 72063, 72083)
16	49–2040	3	Screw–HH (Only On: 72043, 72103, 72063, 72083)
17	322–5	2	Screw–HH (Only On: 72043, 72103, 72063, 72083)
19	92–6726	1	Decal–Hydro Valve (Only On: 72043, 72083)
19	92–7090	1	Decal–Bypass (Only On: 72063, 72103)

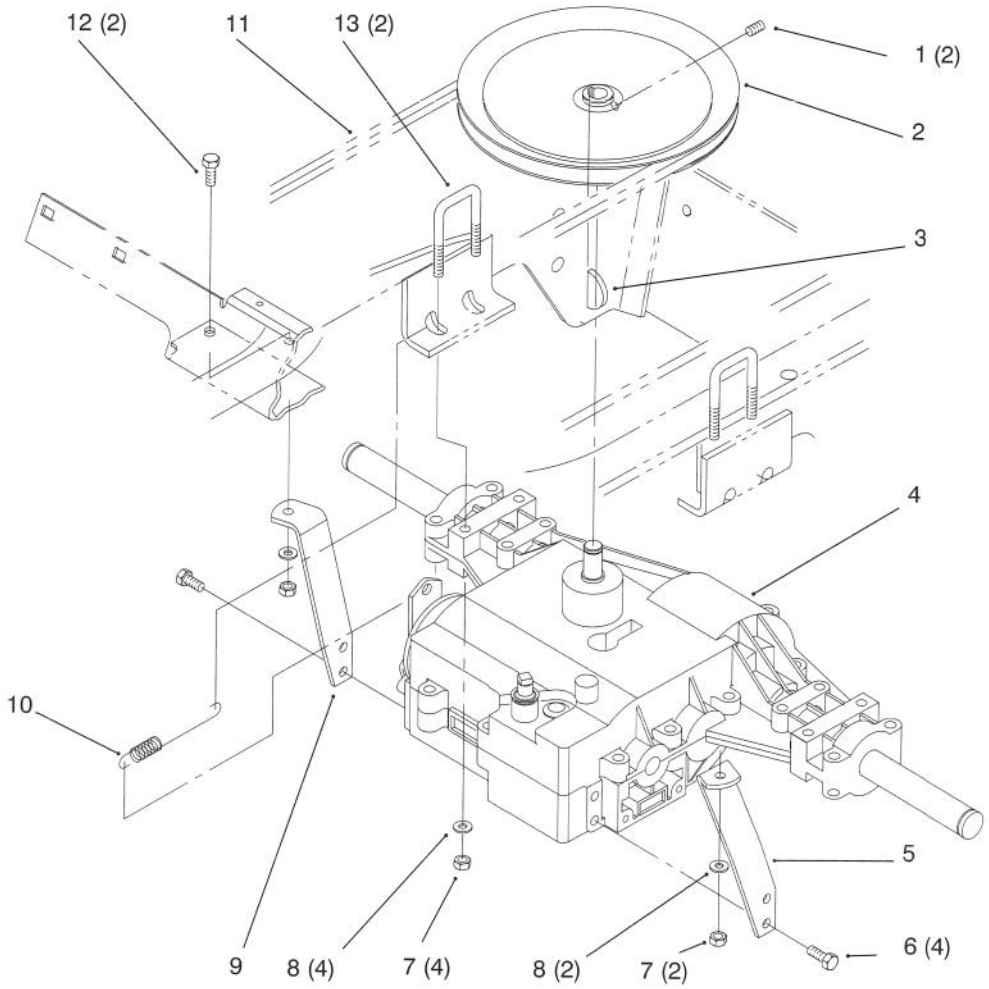

Sheet No.: 23

Transaxle — Gear

Ref. No.	Part No.	Qty.	Description
1	909543	2	Screw–Set (Only On: 72042, 72062)
2	92–6887	1	Pulley (Only On: 72042, 72062)
3	937225	1	Key (Only On: 72042, 72062)
4	92–6761	1	Transaxle–Peerless 820 (Only On: 72042, 72062)
5	92–6889–03	1	Strap–Torque LH (Only On: 72042, 72062)
6	32144–70	4	Screw–TAP (Only On: 72042, 72062)
7	3296–29	6	Nut–Hex Lock (Only On: 72042, 72062)
8	3256–23	6	Washer–Flat (Only On: 72042, 72062)
9	92–6890–03	1	Strap–Torque RH (Only On: 72042, 72062)
10	92–6945	1	Spring–Extension (Only On: 72042, 72062)
11	92–6719	1	Belt–Gear (Only On: 72042, 72062)
12	322–5	2	Screw–HH (Only On: 72042, 72062)
13	92–6769	2	U–Bolt (Only On: 72042, 72062)

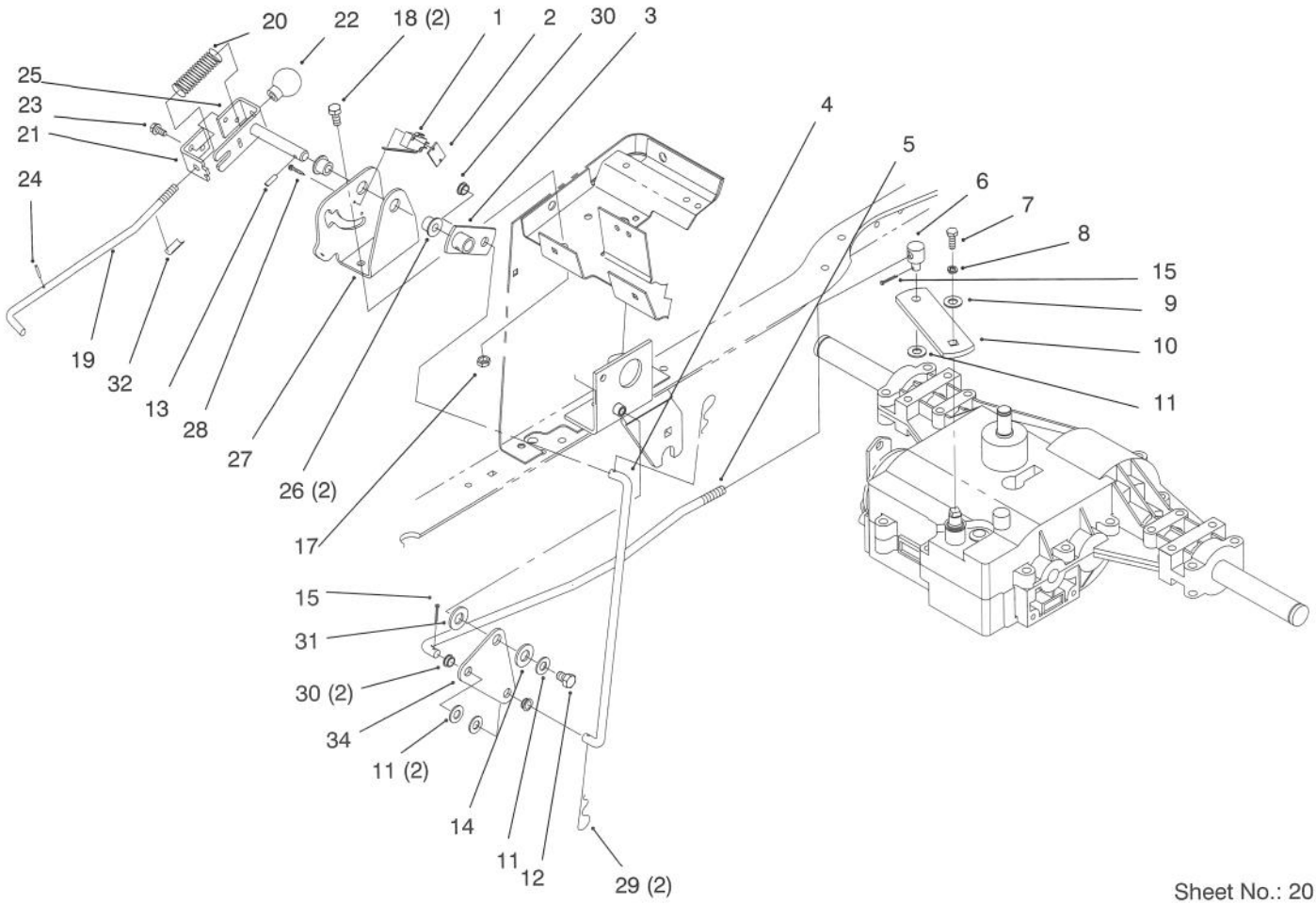

Sheet No.: 20

Gear Shift Linkage

Ref. No.	Part No.	Qty.	Description
⁎1	115230	1	Switch–Clutch (Only On: 72042, 72062)
2	3290–354	1	Nut–Speed (Only On: 72042, 72062)
3	92–6926–03	1	Tube–Linkage (Only On: 72042, 72062)
4	92–7005	1	Rod (Only On: 72042, 72062)
5	92–6896	1	Rod–Shift Transaxle (Only On: 72042, 72062)
6	110656	1	Trunnion (Only On: 72042, 72062)
7	329–23	1	Screw (Only On: 72042, 72062)
8	3253–3	1	Washer–Lock (Only On: 72042, 72062)
9	7–5461	1	Spacer–Transmission (Only On: 72042, 72062)
10	92–6886	1	Arm–Shift (Only On: 72042, 72062)
11	3256–24	4	Washer–Flat (Only On: 72042, 72062)
12	323–2	1	Screw–HH (Only On: 72042, 72062)
13	32121–4	1	Pin–Roll (Only On: 72042, 72062)
14	3290–413	1	Washer–Belleville (Only On: 72042, 72062)
15	3272–6	2	Pin–Cotter (Only On: 72042, 72062)
17	3296–29	2	Nut–Hex Lock (Only On: 72042, 72062)
18	322–3	2	Screw–HH (Only On: 72042, 72062)
19	92–6920	1	Rod–Shift (Only On: 72042, 72062)
20	3624	2	Spring–Compression (Only On: 72042, 72062)
21	92–6921	1	Bracket–Shaft (Only On: 72042, 72062)
22	233–42	1	Knob (Only On: 72042, 72062)
23	32144–4	2	Screw–TAP (Only On: 72042, 72062)
24	32121–97	1	Pin–Roll (Only On: 72042, 72062)
25	92–6919	1	Pivot–Shift (Only On: 72042, 72062)
26	256–219	2	Bushing (Only On: 72042, 72062)
27	93–0503–03	1	Bracket–Pivot Mount (Only On: 72042, 72062)

⁎ Refer to Lawn/Yard Tractor Service Bulletin for early models with black switches (P/N, Removal, Installation).

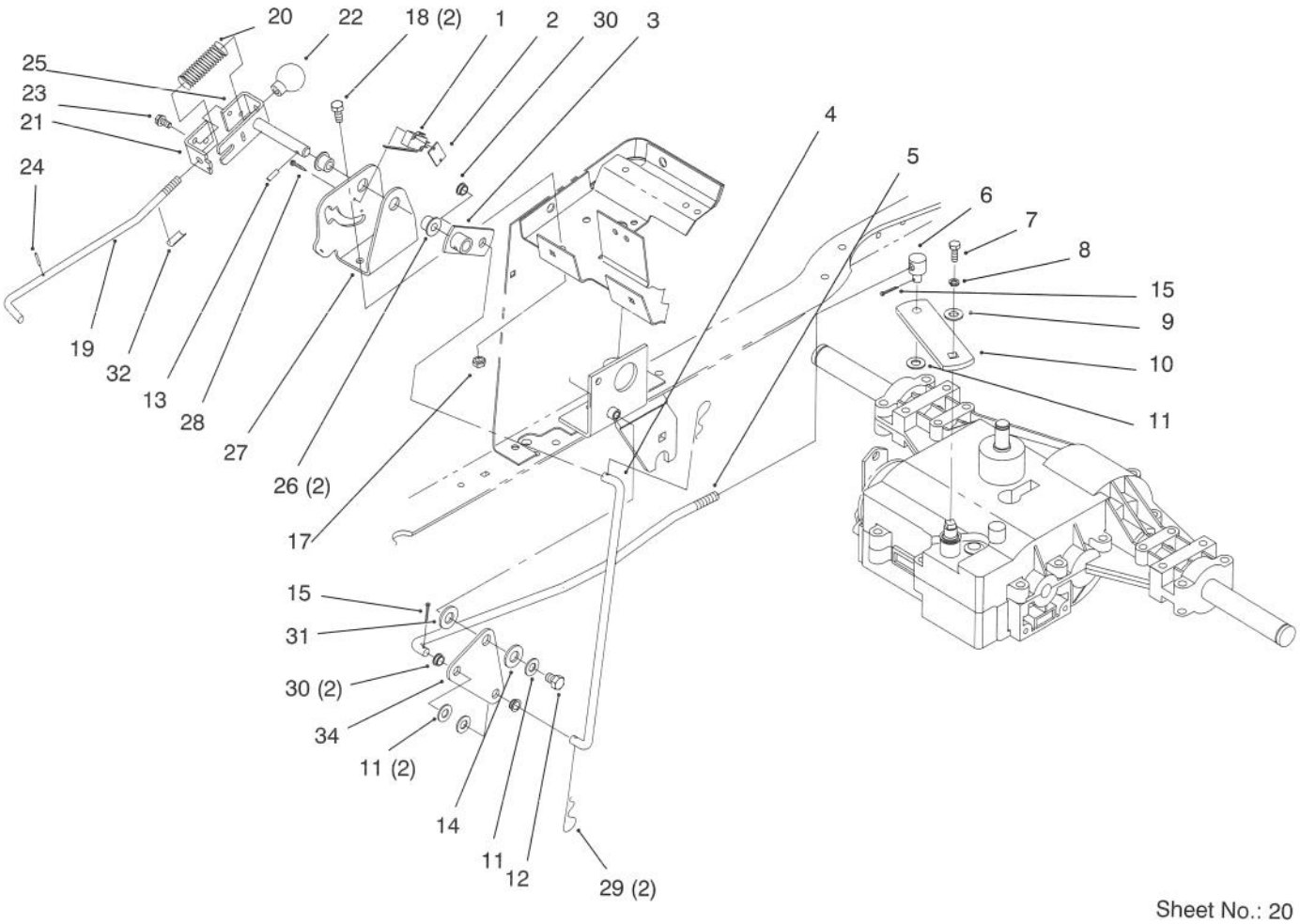

Sheet No.: 20

Gear Shift Linkage

Ref. No.	Part No.	Qty.	Description
28	147665	2	Screw (Only On: 72042, 72062)
29	3290–307	2	Pin–Cotter (Only On: 72042, 72062)
30	92–6875	3	Bearing–Shift Link (Only On: 72042, 72062)
31	47–2910	1	Washer–Thrust (Only On: 72042, 72062)
32	93–3141	1	Decal–Reverse Shift (Only On: 72042)
32	93–3144	1	Decal–Reverse Shift (Only On: 72062)
34	92–6895–03	1	Bracket–Pivot (Only On: 72042, 72062)

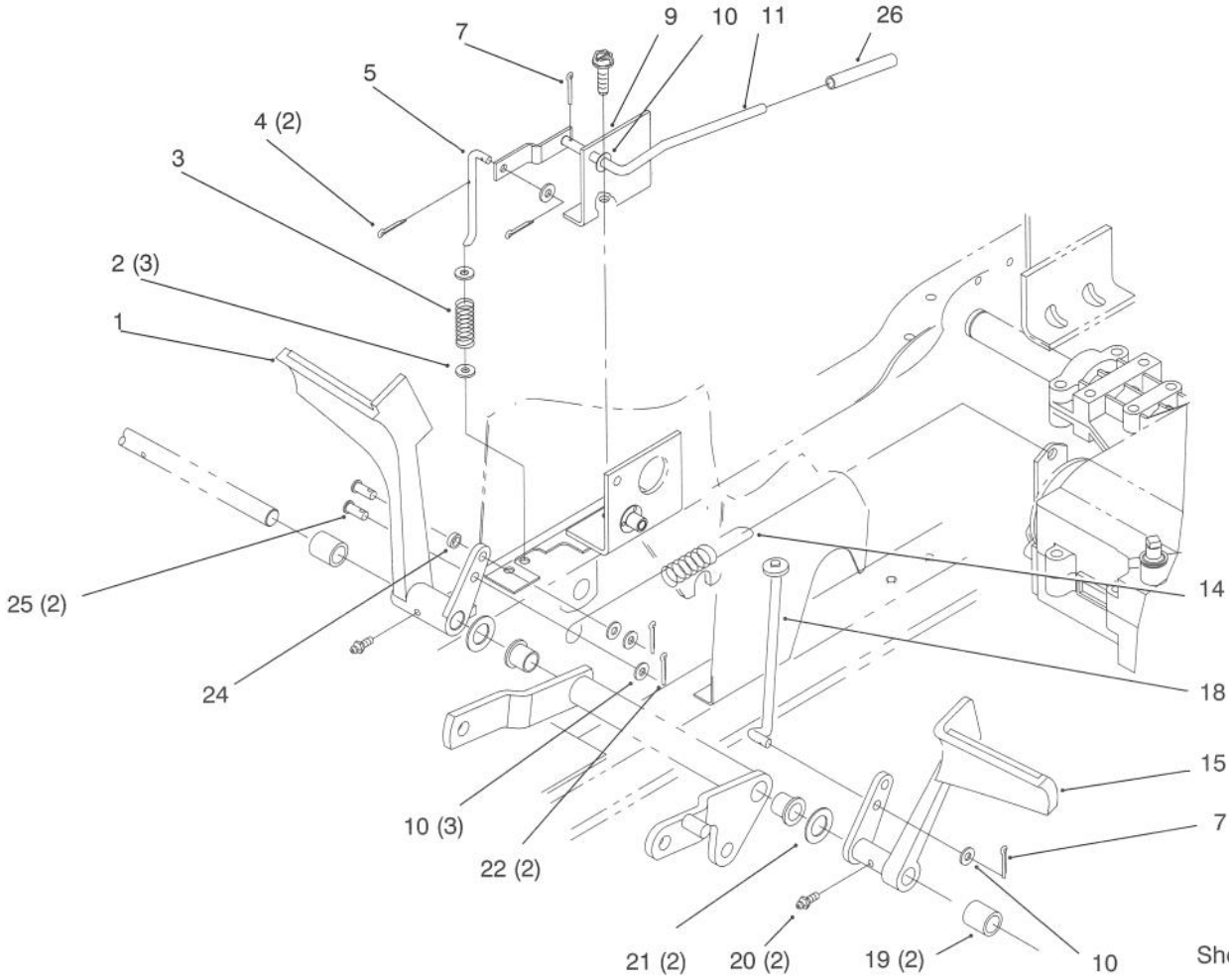

Sheet No.: 22

Clutch and Brake — Gear

Ref. No.	Part No.	Qty.	Description
1	93–3228–03	1	Pedal–Brake (Only On: 72042, 72062)
2	3256–22	3	Washer–Flat (Only On: 72042, 72062)
3	92–7116	1	Spring–Compression (Only On: 72042, 72062)
4	3272–2	2	Pin–Cotter (Only On: 72042, 72062)
5	92–7019	1	Rod–Park Brake (Only On: 72042, 72062)
7	3272–6	2	Pin–Cotter (Only On: 72042, 72062)
9	92–6929–03	1	Bracket–Parking Brake (Only On: 72042, 72062)
10	3256–23	5	Washer–Flat (Only On: 72042, 72062)
11	92–6931	1	Lever–Parking Brake (Only On: 72042, 72062)
14	92–6944	1	Spring–Extension (Only On: 72042, 72062)
15	78–8180–03	1	Pedal–Clutch (Only On: 72042, 72062)
18	92–6924	1	Rod–Clutch (Only On: 72042, 72062)
19	110015	2	Spacer (Only On: 72042, 72062)
20	302–5	2	Fitting–Grease (Only On: 72042, 72062)
21	111712	2	Washer–Wave (Only On: 72042, 72062)
22	3272–10	2	Pin–Cotter (Only On: 72042, 72062)
24	92–7115–03	1	Spacer (Only On: 72042, 72062)
25	283–62	2	Pin–Clevis (Only On: 72042, 72062)
26	92–7009	1	Grip–Parking Brake (Only On: 72042, 72062)

3316–737

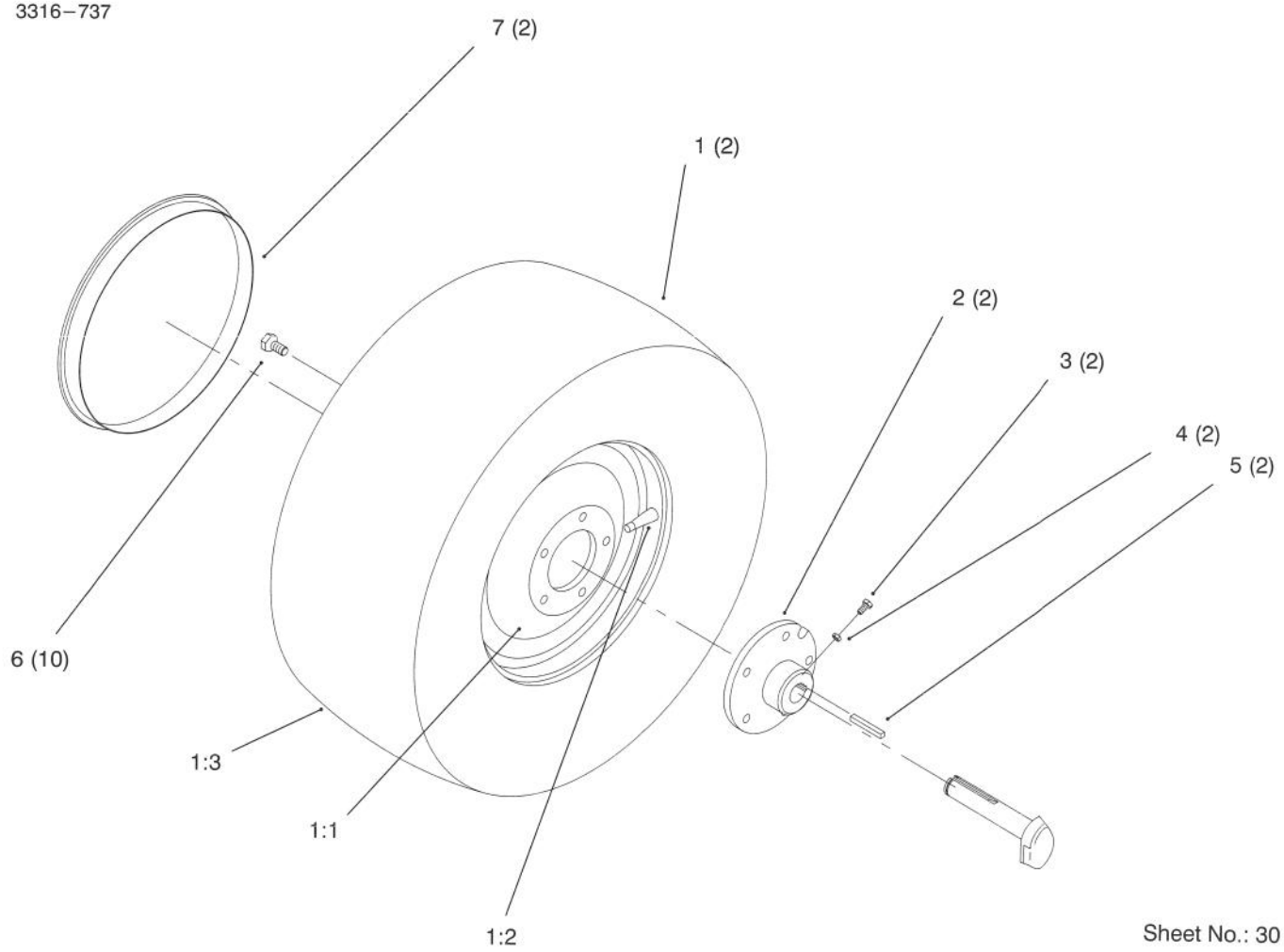

Sheet No.: 30

Rear Wheel

Ref. No.	Part No.	Qty.	Description
☆1		2	Wheel & Tire ASM (Only On: 72042, 72062, 72043, 72063)
☆1		2	Wheel & Tire ASM Rear (Only On: 72083, 72103)
1:1	78–1221	2	Wheel
1:2	5108	2	Valve–Tire Tubeless
1:3	116744	2	Tire (Only On: 72042, 72063, 72062, 72043)
1:3	116971	2	Tire (Only On: 72083, 72103)
2	93–3659–03	2	Hub–Wheel
3	3243–5	2	Screw–Set
4	3218–3	2	Nut–HJ
5	5–1336	2	Key
6	83–2720	10	Bolt–Lug
7	114428	2	Hubcap (Only On: 72083)

☆ Not serviced

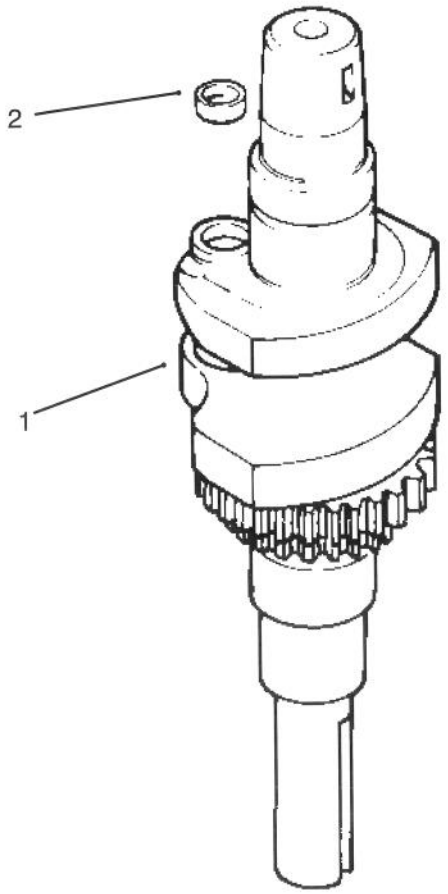

Sheet No.: 101
C–1948

Crankshaft

Ref. No.	Part No.	Qty.	Description
1	12 014 02	1	Crankshaft (Only On: 72042, 72063, 72062, 72043)
2	12 139 01	1	Plug–Cup (Only On: 72042, 72063, 72062, 72043)

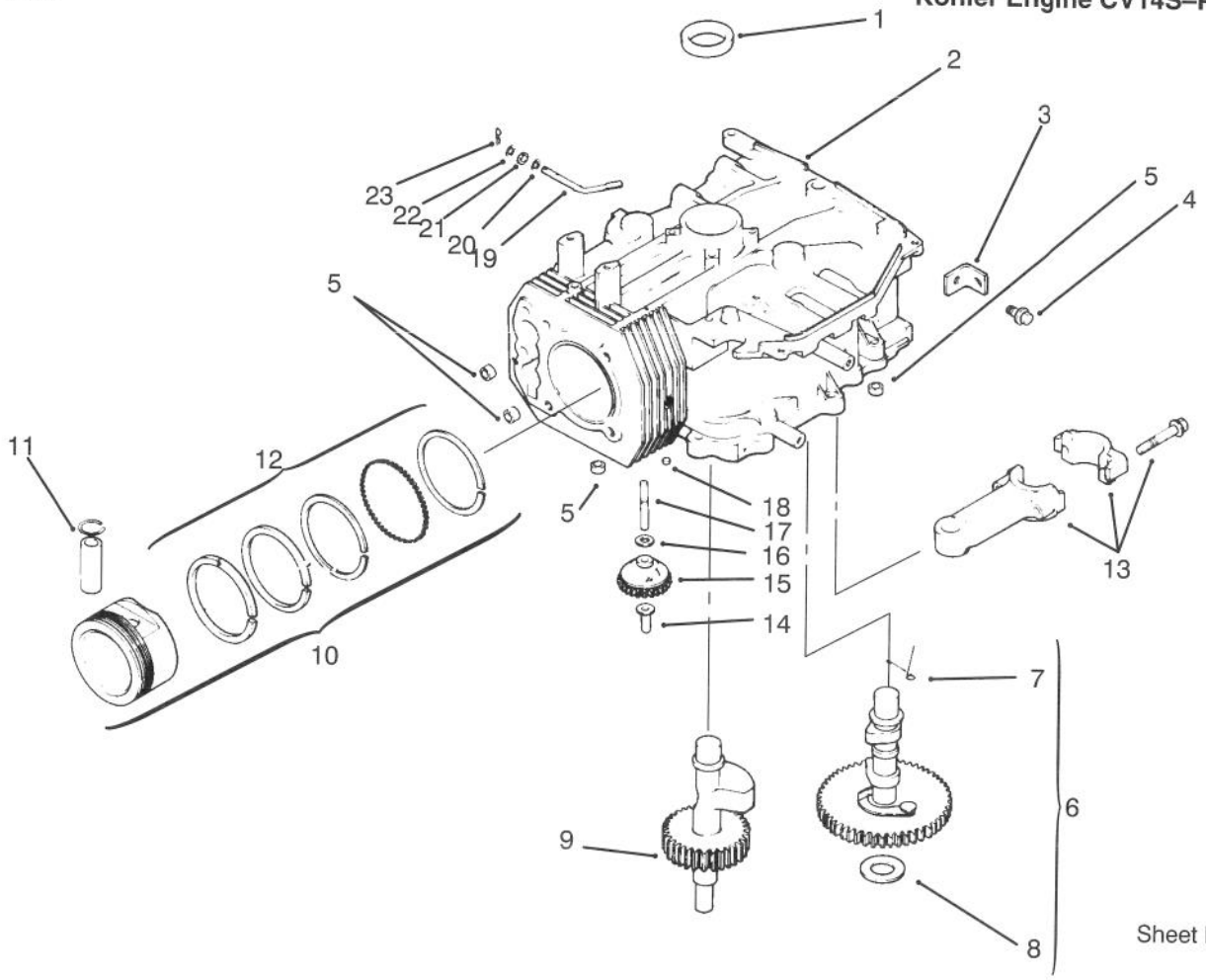

Sheet No.: 102
C–1949

Crankcase

Ref. No.	Part No.	Qty.	Description
1	12 032 03	1	Seal–Crankshaft (Only On: 72042, 72063, 72062, 72043)
*2	12 522 01	1	Block–Short (Only On: 72042, 72063, 72062, 72043)
3	12 445 02	1	Strap–Lifting (Only On: 72042, 72063, 72062, 72043)
4	M–0839025	1	Screw M8x1.25x22 (Only On: 72042, 72063, 72062, 72043)
5	12 380 03	4	Dowel–Locating (Only On: 72042, 72063, 72062, 72043)
6	12 755 49	1	Kit–Camshaft INC 7–8 (Only On: 72042, 72063, 72062, 72043)
†7	12 089 18	1	Spring–Actuating (Only On: 72042, 72063, 72062, 72043)
8	12 422 07	1	Shim–Camshaft A/R (Only On: 72042, 72063, 72062, 72043)
†8	12 422 08	1	Shim–Camshaft A/R (Only On: 72042, 72063, 72062, 72043)
†8	12 422 09	1	Shim–Camshaft A/R (Only On: 72042, 72063, 72062, 72043)
†8	12 422 10	1	Shim–Camshaft A/R (Only On: 72042, 72063, 72062, 72043)
†8	12 422 11	1	Shim–Camshaft A/R (Only On: 72042, 72063, 72062, 72043)
†8	12 422 12	1	Shim–Camshaft A/R (Only On: 72042, 72063, 72062, 72043)
†8	12 422 13	1	Shim–Camshaft A/R (Only On: 72042, 72063, 72062, 72043)
9	12 144 19	1	Shaft–Balance (Only On: 72042, 72063, 72062, 72043)
10	12 874 01	1	Piston ASM STD INC 11–12 (Only On: 72042, 72063, 72062, 72043)
10	12 874 02	1	Piston ASM .25 INC 11–12 (Only On: 72042, 72063, 72062, 72043)
10	12 874 03	1	Piston ASM .50 INC 11–12 (Only On: 72042, 72063, 72062, 72043)
†11	12 018 02	2	Retainer–Piston Pin (Only On: 72043, 72042, 72063, 72062)
†12	12 108 01	1	Ring Set STD (Only On: 72042, 72063, 72062, 72043)
†12	12 108 02	1	Ring Set .25 (Only On: 72043, 72042, 72063, 72062)
†12	12 108 03	1	Ring Set .50 (Only On: 72042, 72063, 72062, 72043)
13	12 067 01	1	Connecting Rod STD (Only On: 72042, 72063, 72062, 72043)
13	12 067 02	1	Connecting Rod .25 (Only On: 72042, 72063, 72062, 72043)
14	12 380 01	1	Pin–Governor Regulating (Only On: 72042, 72063, 72062, 72043)
15	12 043 05	1	Gear–Governor ASM (Only On: 72042, 72063, 72062, 72043)

* Not illustrated
† Included in a service kit or in an assembly

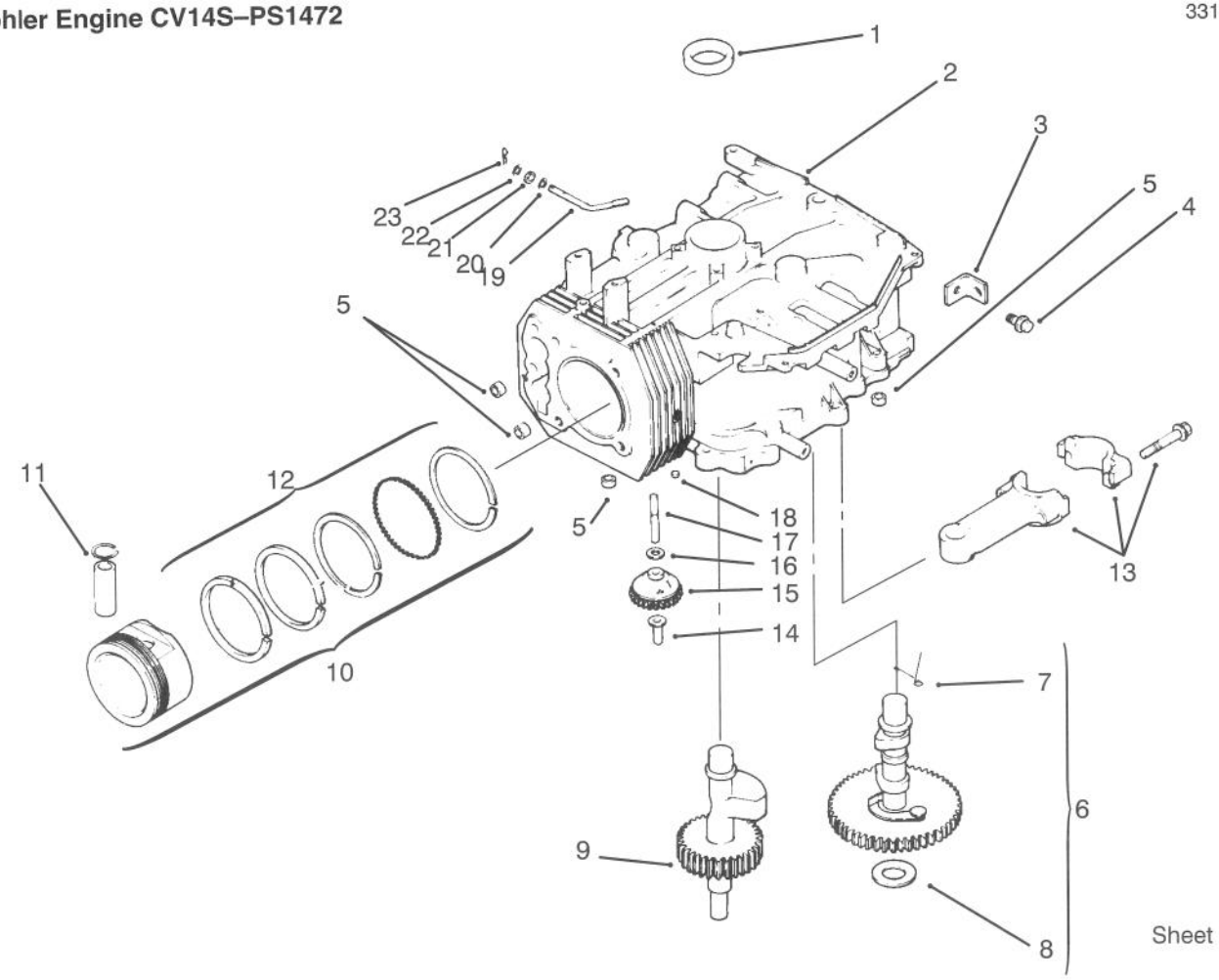

Sheet No.: 102
C–1949

Crankcase

Ref. No.	Part No.	Qty.	Description
16	SM–0631005	1	Washer–Governor (Only On: 72042, 72063, 72062, 72043)
17	12 144 02	1	Shaft–Governor Gear (Only On: 72042, 72063, 72062, 72043)
18	52 139 09	1	Plug–Cup (Only On: 72042, 72063, 72062, 72043)
19	12 144 01	1	Shaft–Governor Cross (Only On: 72042, 72063, 72062, 72043)
20	SM–0631015	1	Washer–Governor Shaft (Only On: 72042, 72063, 72062, 72043)
21	12 032 01	1	Seal–Governor Shaft (Only On: 72042, 72063, 72062, 72043)
22	X–25–102	1	Washer–Flat (Only On: 72042, 72063, 72062, 72043)
23	12 380 04	1	Pin–Governor Hitch (Only On: 72042, 72063, 72062, 72043)
*	12 722 01	1	Gasket Set (Only On: 72042, 72063, 72062, 72043)

* Not illustrated

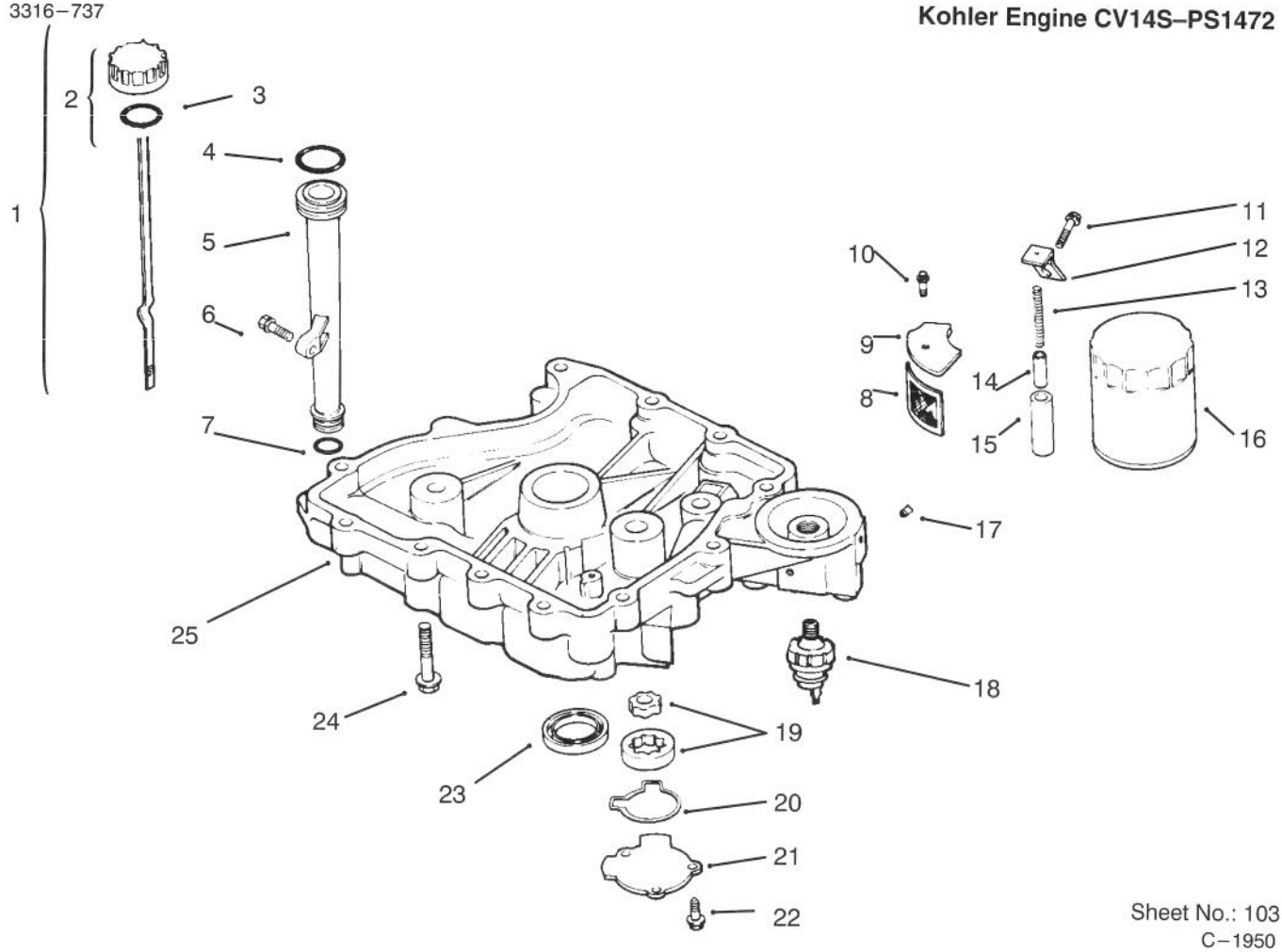

Sheet No.: 103
C–1950

Oil Pan / Lubrication

Ref. No.	Part No.	Qty.	Description
1	12 038 01	1	Dipstick INC 2–3 (Only On: 72042, 72063, 72062, 72043)
†2	25 755 13	1	Kit–Oil Cap INC 3 (Only On: 72042, 72063, 72062, 72043)
†3	12 153 03	1	O Ring–Fill Cap (Only On: 72042, 72063, 72062, 72043)
4	12 153 02	1	O Ring–Upper Fill Tube (Only On: 72042, 72063, 72062, 72043)
5	12 123 04	1	Tube–Oil Fill (Only On: 72042, 72063, 72062, 72043)
6	SM–0545020	1	Screw M5x0.8x20 (Only On: 72042, 72063, 72062, 72043)
7	12 153 01	1	O Ring–Lower Fill Tube (Only On: 72042, 72063, 72062, 72043)
8	12 162 02	1	Screen–Oil Pickup (Only On: 72042, 72063, 72062, 72043)
9	12 096 03	1	Cover–Oil Pickup Screen (Only On: 72042, 72063, 72062, 72043)
10	M–0545016	1	Screw M5x0.8x16 (Only On: 72042, 72063, 72062, 72043)
11	M–1039025	1	Screw M10x1.5x25 (Only On: 72042, 72063, 72062, 72043)
12	12 126 02	1	Bracket–Oil Pump Relief (Only On: 72042, 72063, 72062, 72043)
13	12 089 03	1	Spring–Oil Relief Valve (Only On: 72042, 72063, 72062, 72043)
14	12 462 01	1	Piston–Oil Relief Valve (Only On: 72042, 72063, 72062, 72043)
15	12 208 01	1	Body–Oil Relief Valve (Only On: 72042, 72063, 72062, 72043)
16	12 050 01	1	Filter–Oil (Only On: 72042, 72063, 72062, 72043)
17	X–75–10	2	Plug–SH 3/8 NPTF (Only On: 72042, 72063, 72062, 72043)
18	52 099 06	1	Switch–Oil Pressure (Only On: 72042, 72063, 72062, 72043)
19	12 393 01	1	Pump–Oil (Only On: 72042, 72063, 72062, 72043)
20	12 032 04	1	O Ring–Oil Pump Cover (Only On: 72042, 72063, 72062, 72043)
21	12 096 02	1	Cover–Oil Pump (Only On: 72042, 72063, 72062, 72043)
22	M–0545016	3	Screw M5x0.8x16 (Only On: 72042, 72063, 72062, 72043)
23	12 032 03	1	Seal–Crankshaft (Only On: 72042, 72063, 72062, 72043)
24	SM–0838045	12	Screw M8x1.25x45 (Only On: 72042, 72063, 72062, 72043)
25	12 199 21	1	Pan–Oil (Only On: 72042, 72063, 72062, 72043)
*	52 518 21	1	Lead–Oil Switch W/Tabs (Only On: 72042, 72063, 72062, 72043)

† Included in a service kit or in an assembly
* Not illustrated

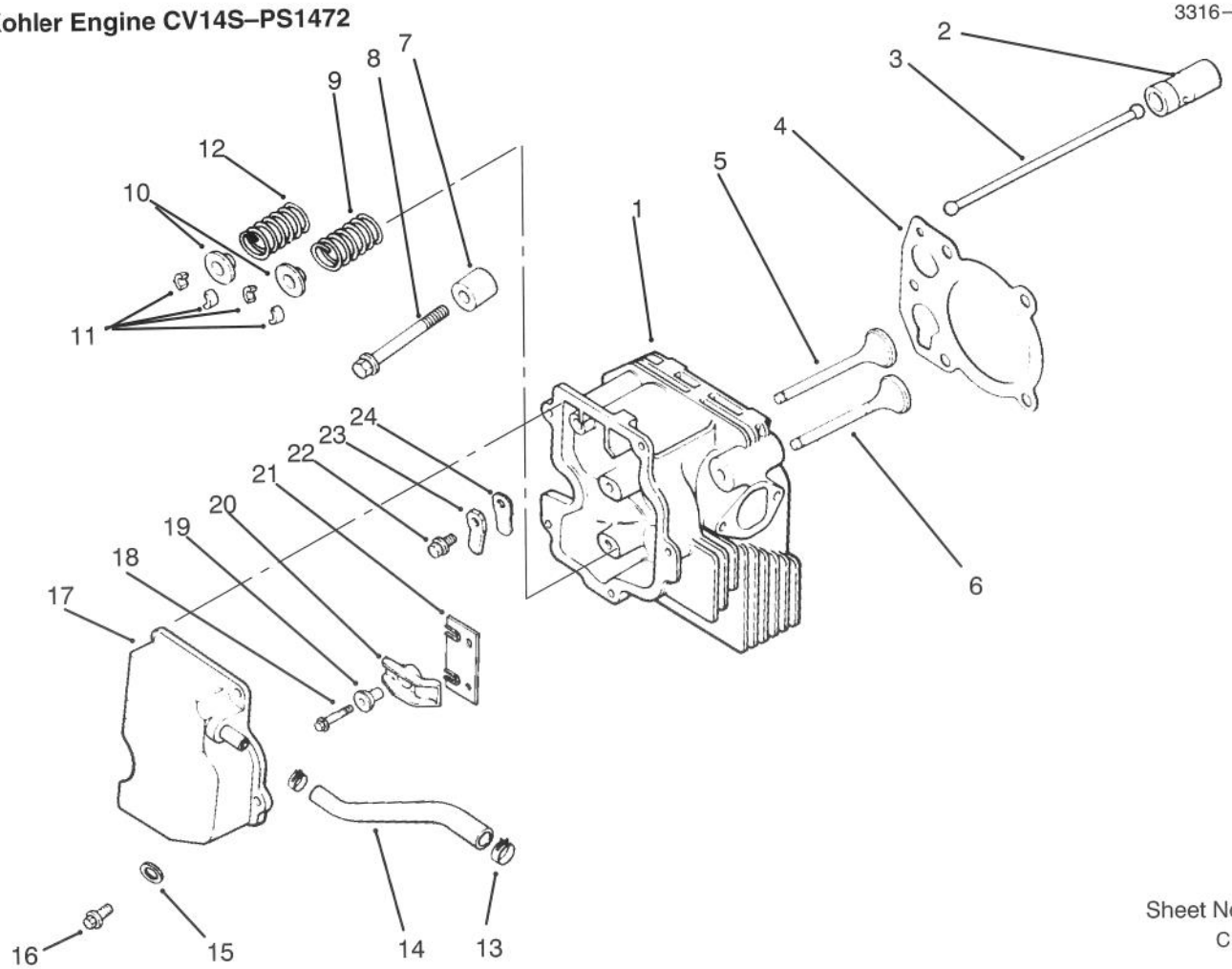

Sheet No.: 104
C–1951

Cylinder Head / Valve / Breather

Ref. No.	Part No.	Qty.	Description
1	12 318 02	1	Cylinder Head (Only On: 72042, 72063, 72062, 72043)
2	12 351 01	2	Lifter–Valve (Only On: 72042, 72063, 72062, 72043)
3	12 411 01	2	Rod–Push (Only On: 72042, 72063, 72062, 72043)
4	12 041 08	1	Gasket–Cylinder Head (Only On: 72042, 72063, 72062, 72043)
5	12 017 01	1	Valve–Intake STD (Only On: 72042, 72063, 72062, 72043)
5	12 017 02	1	Valve–Intake .25 (Only On: 72043, 72042, 72063, 72062)
6	12 016 01	1	Valve–Exhaust STD (Only On: 72042, 72063, 72062, 72043)
6	12 016 02	1	Valve–Exhaust .25 (Only On: 72042, 72063, 72062, 72043)
7	12 112 13	1	Spacer–Head Bolt Exhaust (Only On: 72042, 72063, 72062, 72043)
8	12 086 15	5	Screw M10x1.5x80 (Only On: 72042, 72063, 72062, 72043)
9	12 089 15	1	Spring–Valve Exhaust (Only On: 72042, 72063, 72062, 72043)
10	12 173 01	2	Cap–Valve Spring (Only On: 72042, 72063, 72062, 72043)
11	12 755 03	2	Kit–Retainer (Only On: 72042, 72063, 72062, 72043)
12	12 089 01	1	Spring–Valve Intake (Only On: 72042, 72063, 72062, 72043)
13	X–426–9	2	Clamp–Hose (Only On: 72042, 72063, 72062, 72043)
14	12 326 03	1	Hose–Breather (Only On: 72042, 72063, 72062, 72043)
15	12 468 05	1	Washer–Flat (Only On: 72042, 72063, 72062, 72043)
16	SM–0645020	5	Screw M6x1.0x20 (Only On: 72042, 72063, 72062, 72043)
17	12 096 07	1	Cover–Valve W/Nipple (Only On: 72042, 72063, 72062, 72043)
18	M–0640034	2	Screw M6x1.0x34 (Only On: 72042, 72063, 72062, 72043)
19	24 194 01	2	Ball–Rocker Pivot (Only On: 72042, 72063, 72062, 72043)
20	24 186 01	2	Arm–Rocker (Only On: 72042, 72063, 72062, 72043)
21	12 146 13	1	Plate–Guide (Only On: 72042, 72063, 72062, 72043)
22	M–0545010	1	Screw M5x0.8x10 (Only On: 72042, 72063, 72062, 72043)
23	12 018 01	1	Retainer–Breather Reed (Only On: 72042, 72063, 72062, 72043)
24	24 402 03	1	Reed–Breather (Only On: 72042, 72063, 72062, 72043)

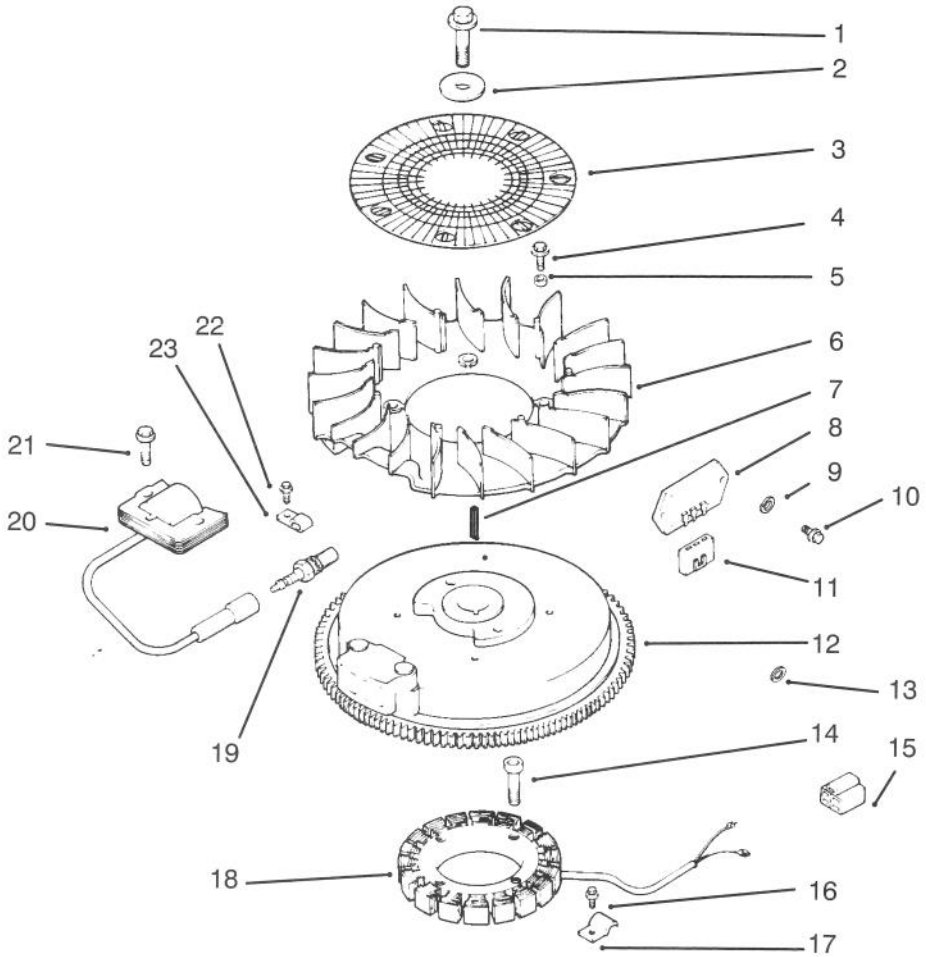

Sheet No.: 105
C–1952

Ignition / Electrical

Ref. No.	Part No.	Qty.	Description
1	12 086 14	1	Screw–Flywheel Mounting (Only On: 72042, 72063, 72062, 72043)
2	12 468 03	1	Washer–Flywheel Screw (Only On: 72042, 72063, 72062, 72043)
3	24 162 03	1	Screen–Grass (Only On: 72042, 72063, 72062, 72043)
4	M–0639016	4	Screw M6x1.0x16 (Only On: 72042, 72063, 72062, 72043)
5	12 112 01	4	Spacer–Fan (Only On: 72042, 72063, 72062, 72043)
6	12 157 02	1	Fan (Only On: 72042, 72063, 72062, 72043)
7	X–42–15	1	Key (Only On: 72042, 72063, 72062, 72043)
8	41 403 09	1	Rectifier–Regulator (Only On: 72042, 72063, 72062, 72043)
9	X–22–11	1	Washer–Lock (Only On: 72042, 72063, 72062, 72043)
10	M–0639016	2	Screw M6x1.0x16 (Only On: 72042, 72063, 72062, 72043)
11	236602	1	Connector–Regulator (Only On: 72042, 72063, 72062, 72043)
12	12 025 16	1	Flywheel ASM (Only On: 72042, 72063, 72062, 72043)
13	X–25–5	1	Washer–Flat (Only On: 72042, 72063, 72062, 72043)
14	M–0548025	4	Screw M5x0.8x25 (Only On: 72042, 72063, 72062, 72043)
15	48 155 01	1	Connector–5 Contact (Only On: 72042, 72063, 72062, 72043)
16	M–0545010	1	Screw M5x0.8x10 (Only On: 72042, 72063, 72062, 72043)
17	12 154 02	1	Clip–Stator Harness (Only On: 72042, 72063, 72062, 72043)
18	24 085 01	1	Stator–15 Amp (Only On: 72042, 72063, 72062, 72043)
19	12 132 02	1	Spark Plug (Only On: 72042, 72063, 72062, 72043)
20	12 584 01	1	Module–Ignition (Only On: 72042, 72063, 72062, 72043)
21	SM–0545020	2	Screw M5x0.8x20 (Only On: 72042, 72063, 72062, 72043)
22	M–0545010	1	Screw M5x0.8x10 (Only On: 72042, 72063, 72062, 72043)
23	X–728–1	1	Clip–Kill Lead (Only On: 72042, 72063, 72062, 72043)
*	12 518 01	1	Lead–White (Only On: 72042, 72063, 72062, 72043)
*	15 518 09	1	Lead–Green (Only On: 72042, 72063, 72062, 72043)
*	25 518 05	1	Lead–Black (Only On: 72042, 72063, 72062, 72043)

* Not illustrated

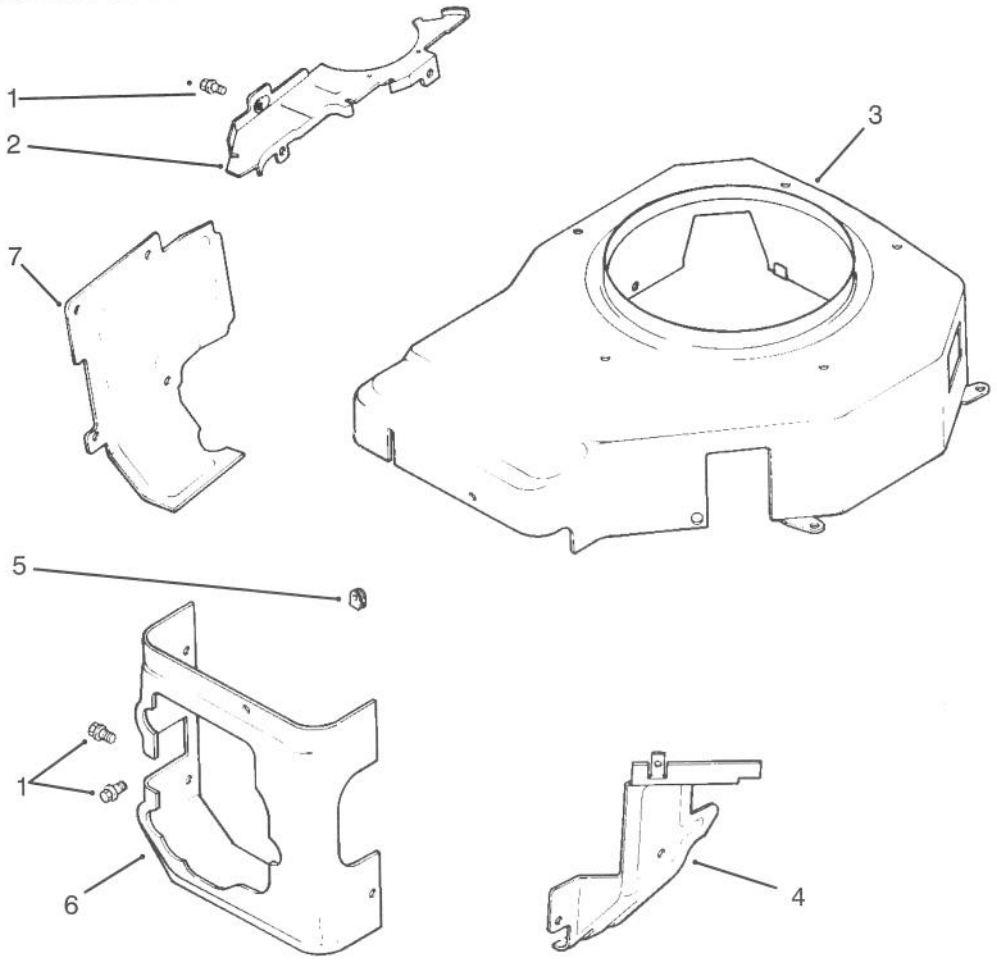

Sheet No.: 106
C–1953

Blower Housing & Baffles

Ref. No.	Part No.	Qty.	Description
1	M–0545010	13	Screw M5x0.8x10 (Only On: 72042, 72063, 72062, 72043)
2	12 146 07	1	Plate–Blower Housing (Only On: 72042, 72063, 72062, 72043)
3	12 027 18	1	Housing–Blower (Only On: 72042, 72063, 72062, 72043)
4	12 063 05	1	Baffle–Carburetor (Only On: 72042, 72063, 72062, 72043)
5	12 313 03	1	Grommet–Blower Housing (Only On: 72042, 72063, 72062, 72043)
6	12 063 08	1	Baffle–Cylinder Head (Only On: 72042, 72063, 72062, 72043)
7	12 063 01	1	Baffle–Cylinder Barrel (Only On: 72042, 72063, 72062, 72043)

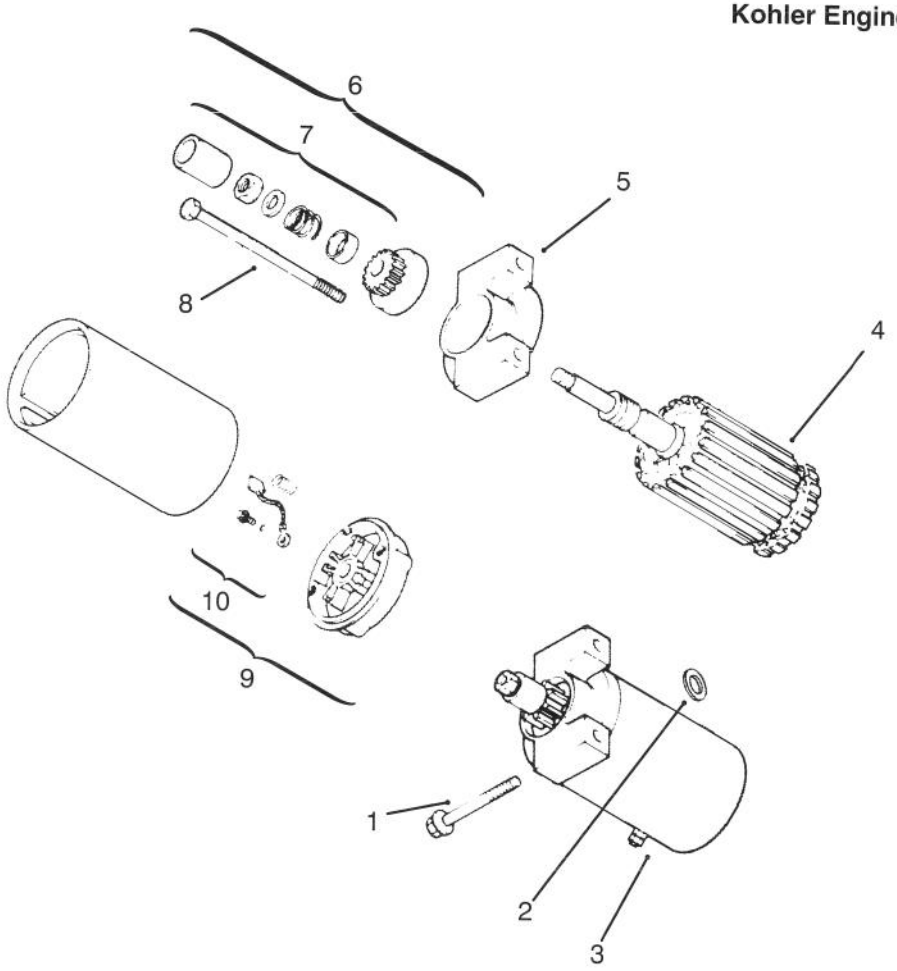

Sheet No.: 107
C–1954

Starting System

Ref. No.	Part No.	Qty.	Description
1	M0839070	2	Screw M8x1.25x70 (Only On: 72042, 72063, 72062, 72043)
2	12 468 01	2	Washer (Only On: 72042, 72063, 72062, 72043)
3	12 098 05	1	Starter ASM INC 4–10 (Only On: 72042, 72063, 72062, 72043)
†4	12 170 02	1	Armature (Only On: 72042, 72063, 72062, 72043)
†5	12 227 01	1	Cap–Drive End (Only On: 72042, 72063, 72062, 72043)
†6	12 755 12	1	Kit–Drive INC 7 (Only On: 72042, 72063, 72062, 72043)
†7	12 755 06	1	Kit–Drive Parts (Only On: 72042, 72063, 72062, 72043)
†8	12 086 02	1	Screw–HF (Only On: 72042, 72063, 72062, 72043)
†9	12 243 01	1	Cap–Commutator INC 10 (Only On: 72042, 72063, 72062, 72043)
†10	82 755 28	1	Kit–Brush And Spring (Only On: 72042, 72063, 72062, 72043)
*	52 357 01	1	Lubricant–Starter (Only On: 72042, 72063, 72062, 72043)

† Included in a service kit or in an assembly
* Not illustrated

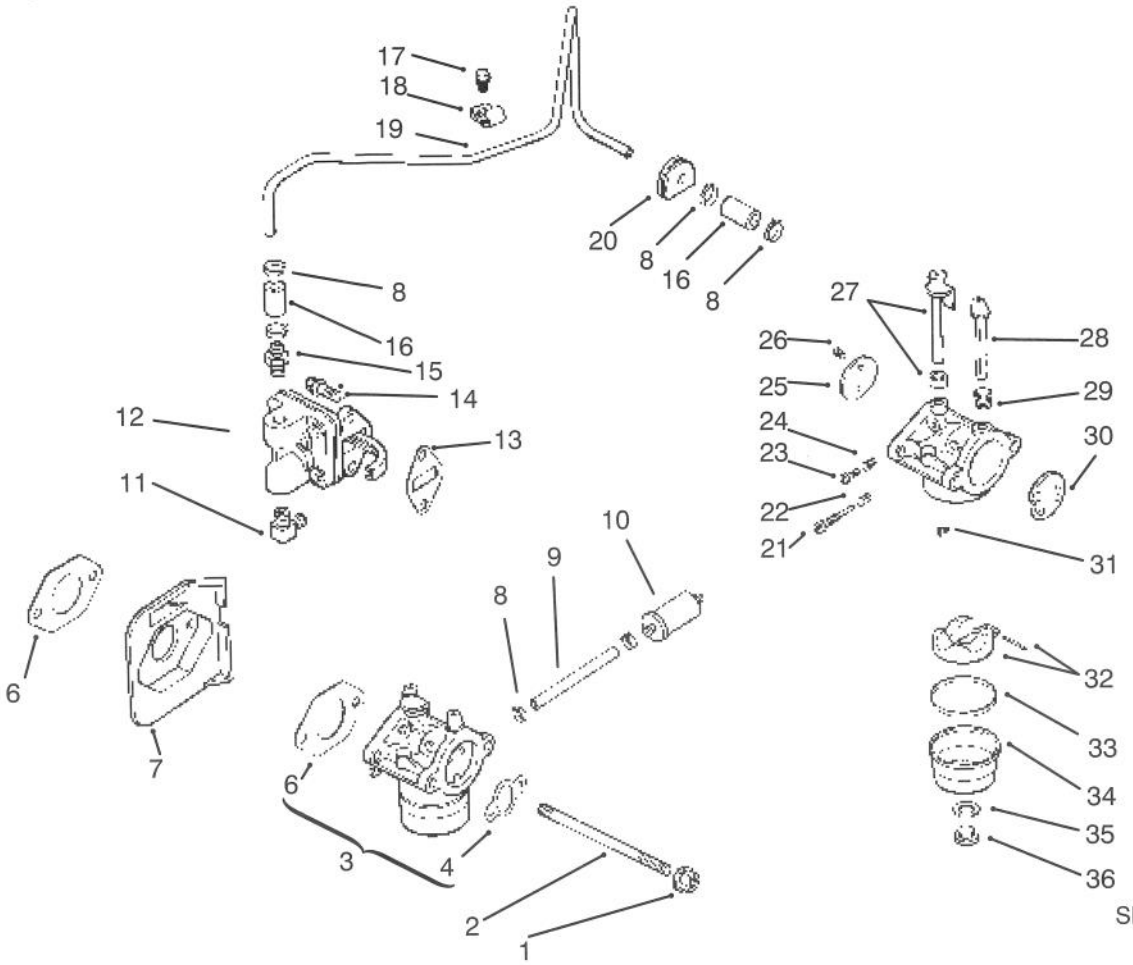

Sheet No.: 108
C–1955

Fuel System

Ref. No.	Part No.	Qty.	Description
1	SM–0641060	2	Nut M6x1.0 (Only On: 72042, 72063, 72062, 72043)
2	M–0629122	2	Stud M6x1.0x110 (Only On: 72042, 72063, 72062, 72043)
3	12 853 01	1	Kit–Carb INC 4/6/21–36 (Only On: 72042, 72063, 72062, 72043)
†4	12 041 02	1	Gasket–Air Cleaner (Only On: 72042, 72063, 72062, 72043)
†6	12 041 01	2	Gasket–Carburetor (Only On: 72042, 72063, 72062, 72043)
7	12 265 01	1	Deflector–Heat (Only On: 72042, 72063, 72062, 72043)
8	X–426–9	1	Clamp–Hose (Only On: 72042, 72063, 72062, 72043)
9	25 353 02	1	Line–Fuel 3" (Only On: 72042, 72063, 72062, 72043)
10	25 050 02	1	Filter–Fuel (Only On: 72042, 72063, 72062, 72043)
11	25 155 02	1	Connector–90 DEG (Only On: 72042, 72063, 72062, 72043)
12	12 559 01	1	Kit–Pump INC 13–14 (Only On: 72042, 72063, 72062, 72043)
†13	25 041 09	1	Gasket–Fuel Pump (Only On: 72042, 72063, 72062, 72043)
†14	SM–0645020	2	Screw M6x1.0x20 (Only On: 72042, 72063, 72062, 72043)
15	X–380–1	1	Connector–Straight (Only On: 72042, 72063, 72062, 72043)
16	12 353 01	2	Line–Fuel 1.25 Inch (Only On: 72042, 72063, 72062, 72043)
17	M–0545010	1	Screw M5x0.8x10 (Only On: 72042, 72063, 72062, 72043)
18	12 154 01	1	Clamp–Fuel Line (Only On: 72042, 72063, 72062, 72043)
19	12 123 01	1	Line–Fuel (Only On: 72042, 72063, 72062, 72043)
20	12 313 01	1	Grommet (Only On: 72042, 72063, 72062, 72043)
†21	12 368 01	1	Needle–Idle Fuel Adjust (Only On: 72042, 72063, 72062, 72043)
†22	12 089 09	1	Spring–Idle Fuel (Only On: 72042, 72063, 72062, 72043)
†23	12 086 04	1	Screw–Idle Speed Adjust (Only On: 72042, 72063, 72062, 72043)
†24	12 089 09	1	Spring–Idle Fuel (Only On: 72042, 72063, 72062, 72043)
†25	12 146 03	1	Plate–Throttle (Only On: 72042, 72063, 72062, 72043)
†26	25 086 27	1	Screw–Throttle Plate (Only On: 72042, 72063, 72062, 72043)
†27	12 144 09	1	Shaft–W/Lever & Seal (Only On: 72042, 72063, 72062, 72043)

† Included in a service kit or in an assembly

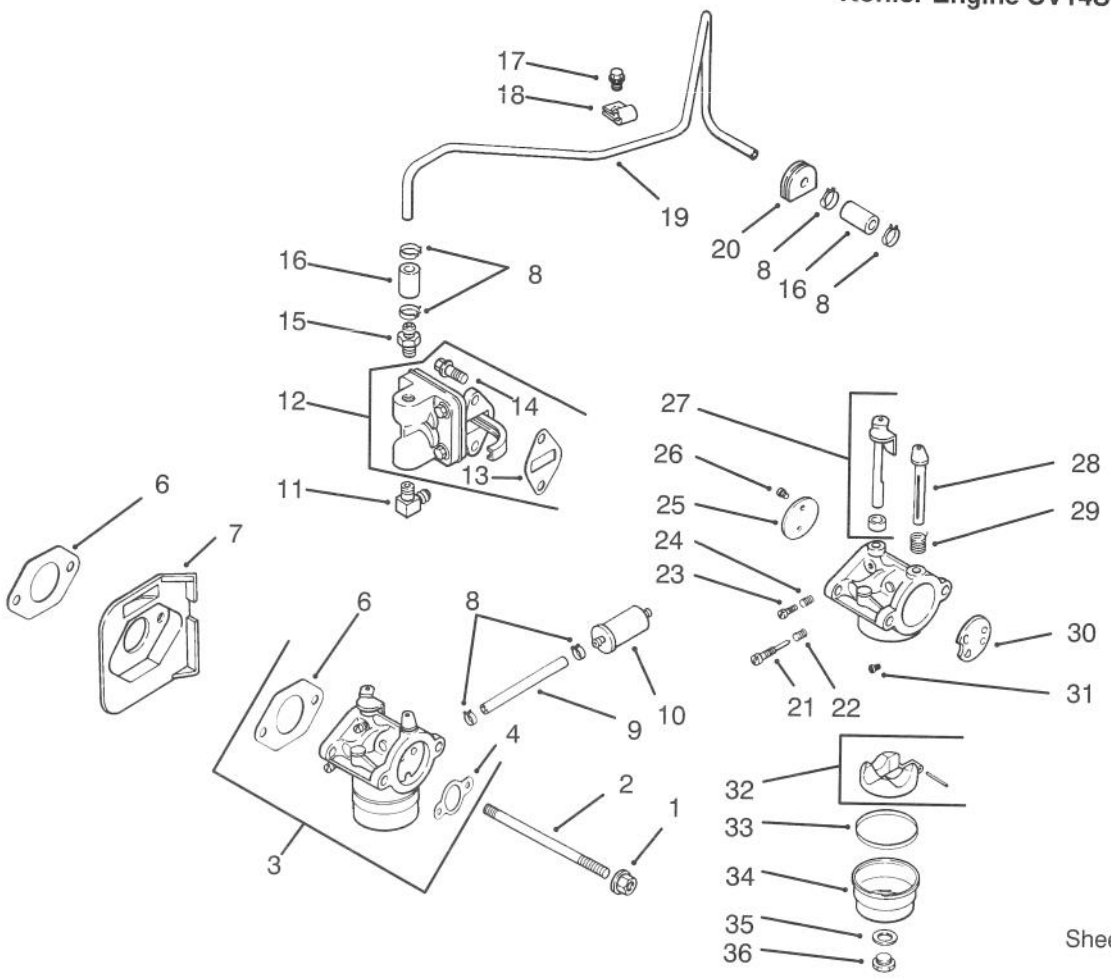

Sheet No.: 108
C–1955

Fuel System

Ref. No.	Part No.	Qty.	Description
†28	12 144 08	1	Shaft–Choke (Only On: 72042, 72063, 72062, 72043)
†29	12 089 10	1	Spring–Choke Return (Only On: 72042, 72063, 72062, 72043)
†30	12 146 02	1	Plate–Choke (Only On: 72042, 72063, 72062, 72043)
†31	12 337 09	1	Jet–Main (Only On: 72042, 72063, 72062, 72043)
†32	12 757 02	1	Kit–Float (Only On: 72042, 72063, 72062, 72043)
†33	12 041 05	1	Gasket–Bowl (Only On: 72042, 72063, 72062, 72043)
†34	12 104 01	1	Bowl–Fuel (Only On: 72042, 72063, 72062, 72043)
†35	12 041 06	1	Gasket–Bowl Screw (Only On: 72042, 72063, 72062, 72043)
†36	12 086 05	1	Screw–Fuel Bowl (Only On: 72042, 72063, 72062, 72043)
*	12 041 01	1	Gasket–Carburetor (Only On: 72042, 72063, 72062, 72043)
*	12 755 09	1	Kit–High Altitude (Only On: 72042, 72063, 72062, 72043)
*	12 757 01	1	Kit–Carburetor Repair (Only On: 72042, 72063, 72062, 72043)

† Included in a service kit or in an assembly
* Not illustrated

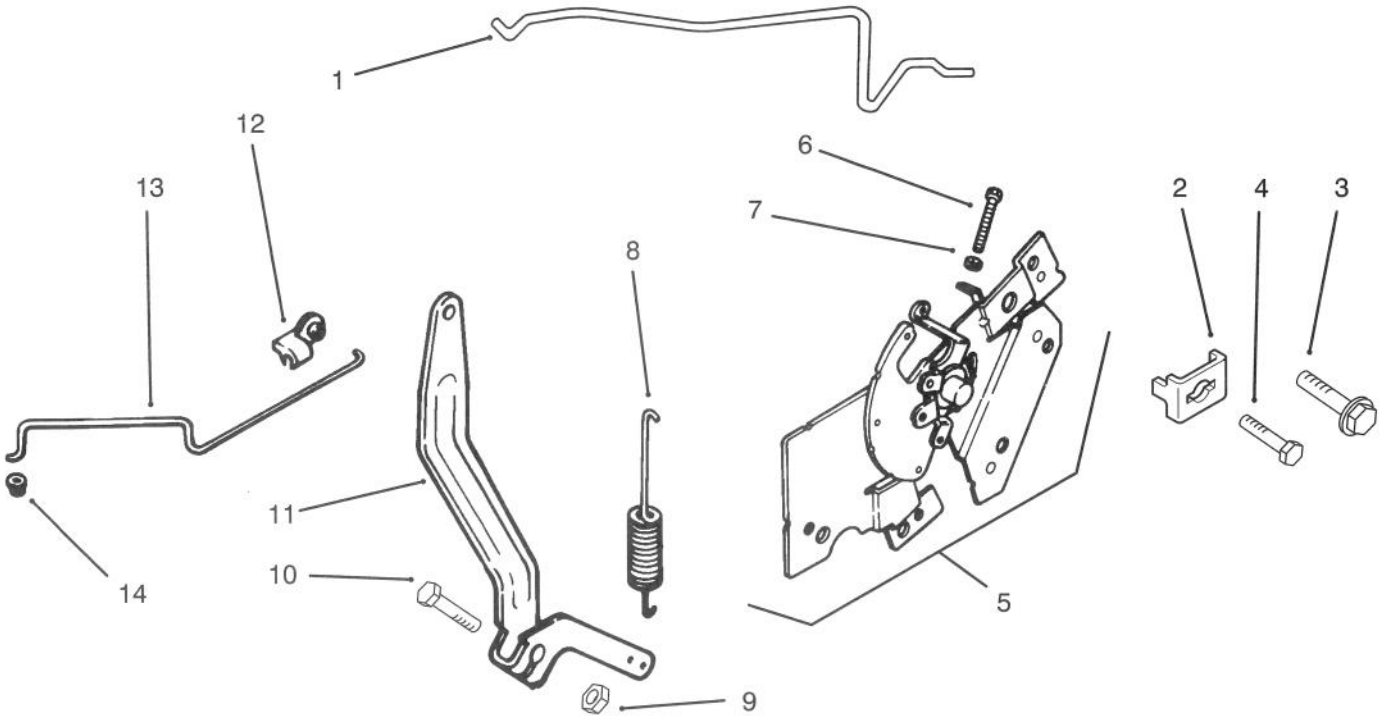

Sheet No.: 109
C–1956

Engine Controls

Ref. No.	Part No.	Qty.	Description
1	12 079 07	1	Linkage–Choke (Only On: 72042, 72063, 72062, 72043)
2	12 237 01	2	Clamp–Cable (Only On: 72042, 72063, 72062, 72043)
3	M–0645016	2	Screw–HH (Only On: 72042, 72063, 72062, 72043)
4	M–0545016	2	Screw M5x0.8x16 (Only On: 72042, 72063, 72062, 72043)
5	12 536 02	1	Control–ASM INC 6–7 (Only On: 72042, 72063, 72062, 72043)
†6	M–0401030	1	Screw–HHF M4x0.7x28 (Only On: 72042, 72063, 72062, 72043)
†7	M–0446030	1	Nut–Hex M4x0.7 (Only On: 72042, 72063, 72062, 72043)
8	52 089 07	1	Spring–Governor (Only On: 72042, 72063, 72062, 72043)
9	SM–0641060	1	Nut M6x1.0 (Only On: 72042, 72063, 72062, 72043)
10	SM–0642025	1	Screw M6x1.0x25 (Only On: 72042, 72063, 72062, 72043)
11	12 090 05	1	Lever–Governor (Only On: 72042, 72063, 72062, 72043)
12	25 158 11	1	Bushing–Linkage (Only On: 72042, 72063, 72062, 72043)
13	12 079 01	1	Linkage–Throttle (Only On: 72042, 72063, 72062, 72043)
14	25 158 08	1	Bushing–Linkage (Only On: 72042, 72063, 72062, 72043)

† Included in a service kit or in an assembly

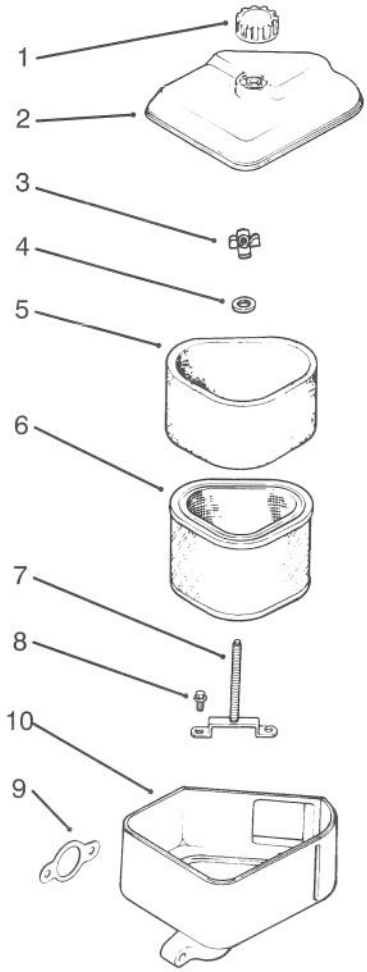

Sheet No.: 110
C–1957

Air Intake / Filtration

Ref. No.	Part No.	Qty.	Description
1	12 341 01	1	Knob–Air Cleaner Cover (Only On: 72042, 72063, 72062, 72043)
2	12 096 06	1	Cover–Air Cleaner (Only On: 72042, 72063, 72062, 72043)
3	12 100 01	1	Nut–Wing (Only On: 72042, 72063, 72062, 72043)
4	X–25–63	1	Washer–Flat (Only On: 72042, 72063, 72062, 72043)
5	12 083 05	1	Element–Air Cleaner (Only On: 72042, 72063, 72062, 72043)
6	12 083 08	1	Precleaner–Element (Only On: 72042, 72063, 72062, 72043)
7	12 072 03	1	Stud–Mounting Plate (Only On: 72042, 72063, 72062, 72043)
8	12 086 01	1	Screw–Mounting Plate (Only On: 72042, 72063, 72062, 72043)
9	12 041 02	1	Gasket–Air Cleaner (Only On: 72042, 72063, 72062, 72043)
10	12 094 01	1	Base–Air Cleaner (Only On: 72042, 72063, 72062, 72043)
*	12 113 04	1	Decal–Air Cleaner (Only On: 72043, 72042, 72063, 72062)

* Not illustrated

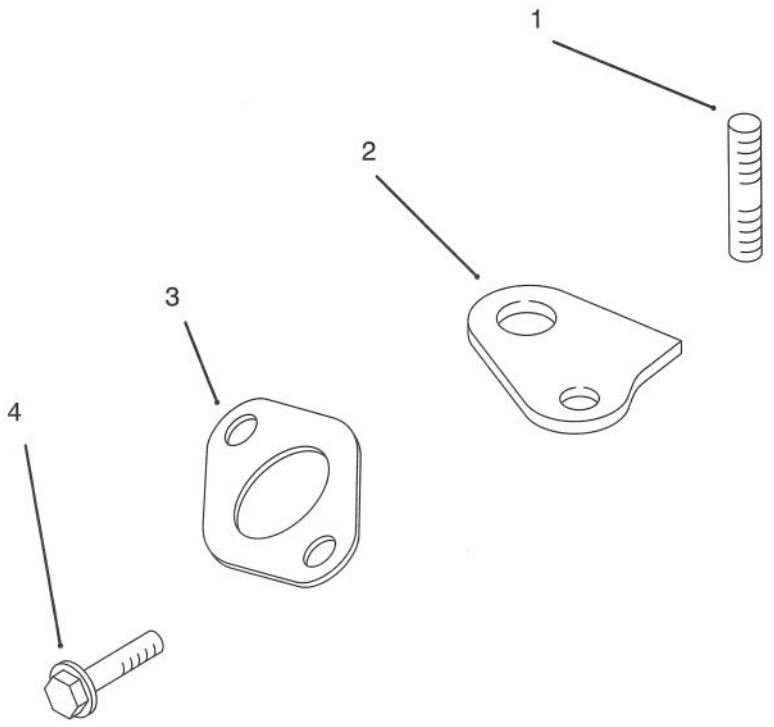

Sheet No.: 111
C–1958

Exhaust

Ref. No.	Part No.	Qty.	Description
1	M–0829033	2	Stud M8x1.25x20 (Only On: 72043, 72042, 72063, 72062)
2	12 445 01	1	Strap–Lifting (Only On: 72043, 72042, 72063, 72062)
3	12 041 03	1	Gasket–Exhaust Manifold (Only On: 72043, 72042, 72063, 72062)
4	M–0645025	1	Screw–Valve Cover (Only On: 72043, 72042, 72063, 72062)

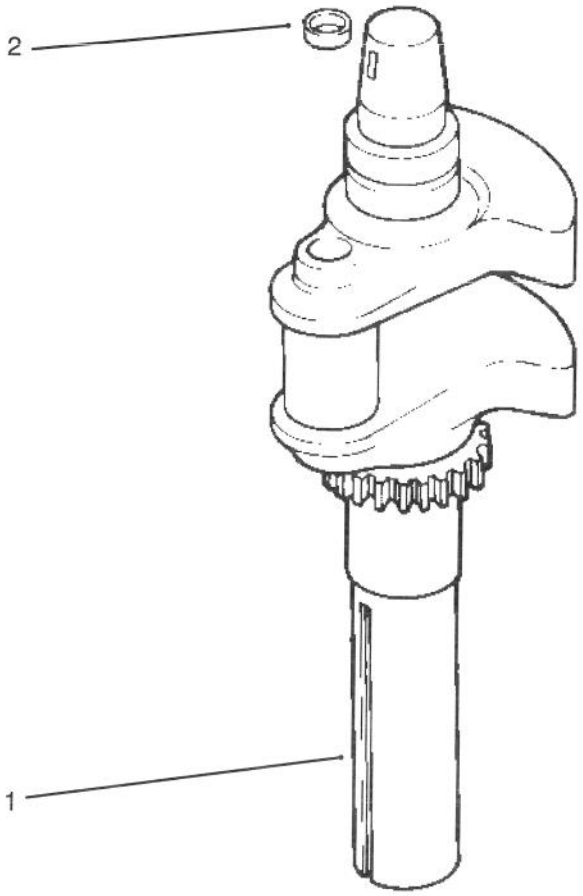

Sheet No.: 201
C–1959

Crankshaft

Ref. No.	Part No.	Qty.	Description
1	24 014 42	1	Crankshaft (Only On: 72103, 72083)
2	52 139 09	1	Plug–Cup (Only On: 72103, 72083)

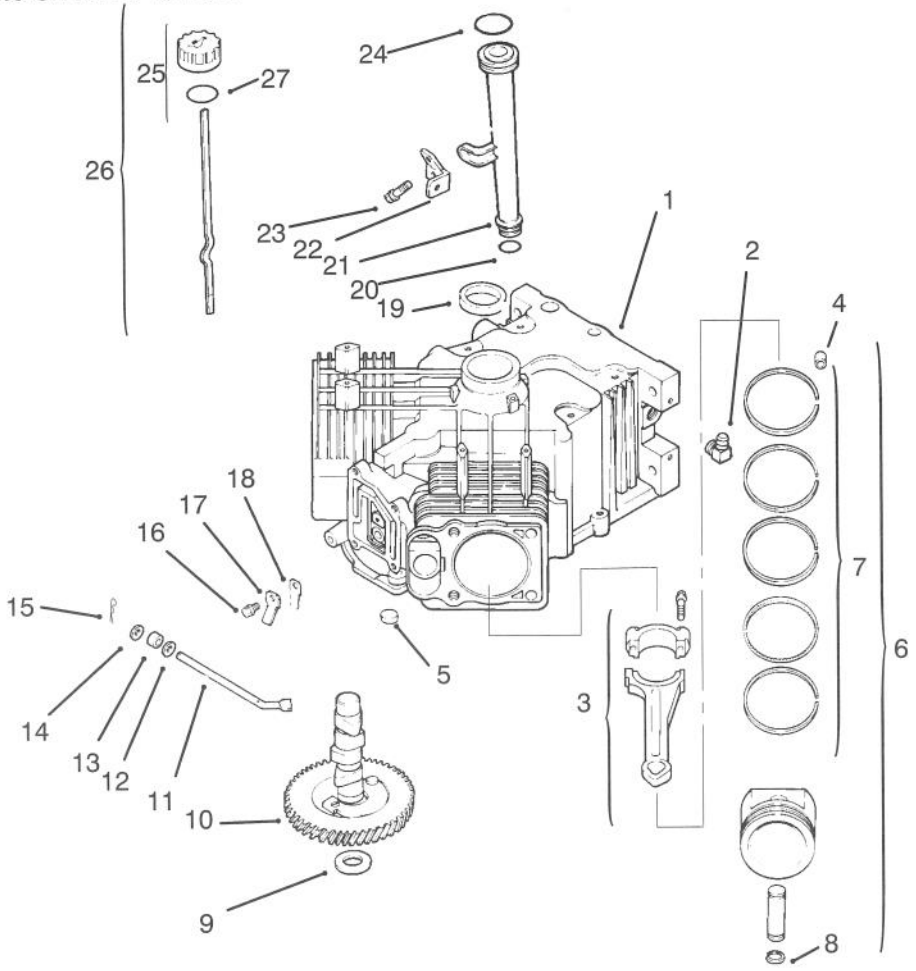

Sheet No.: 202
C–1960

Crankcase

Ref. No.	Part No.	Qty.	Description
1	24 522 09	1	Short Block (Only On: 72103, 72083)
2	25 155 02	1	Connector–90 DEG (Only On: 72103, 72083)
3	24 067 01	2	Connecting Rod STD (Only On: 72103, 72083)
3	24 067 02	2	Connecting Rod .25 (Only On: 72103, 72083)
†4	12 380 03	6	Dowel–Locating (Only On: 72103, 72083)
5	52 139 09	1	Plug–Cup (Only On: 72103, 72083)
6	24 874 01	2	Piston ASM STD INC 4/7/8 (Only On: 72103, 72083)
6	24 874 02	2	Piston ASM .25 INC 4/7/8 (Only On: 72103, 72083)
6	24 874 03	2	Piston ASM .50 INC 4/7/8 (Only On: 72103, 72083)
†7	24 108 01	2	Ring Set STD INC 4/8 (Only On: 72103, 72083)
7	24 108 02	2	Ring Set .25 INC 4/8 (Only On: 72103, 72083)
7	24 108 03	2	Ring Set .50 INC 4/8 (Only On: 72103, 72083)
†8	24 018 01	4	Retainer–Piston Pin (Only On: 72103, 72083)
9	12 422 07	1	Shim–Camshaft A/R (Only On: 72103, 72083)
9	12 422 08	1	Shim–Camshaft A/R (Only On: 72103, 72083)
9	12 422 09	1	Shim–Camshaft A/R (Only On: 72103, 72083)
9	12 422 10	1	Shim–Camshaft A/R (Only On: 72103, 72083)
9	12 422 11	1	Shim–Camshaft A/R (Only On: 72103, 72083)
9	12 422 12	1	Shim–Camshaft A/R (Only On: 72103, 72083)
9	12 422 13	1	Shim–Camshaft A/R (Only On: 72103, 72083)
10	24 012 05	1	Camshaft (Only On: 72103, 72083)
11	24 144 01	1	Shaft–Governor Cross (Only On: 72103, 72083)
12	X–25–63	1	Washer–Flat (Only On: 72103, 72083)
13	12 032 01	1	Seal–Governor Shaft (Only On: 72103, 72083)
14	X–25–102	1	Washer–Flat (Only On: 72103, 72083)
15	12 380 04	1	Pin–Governor Hitch (Only On: 72103, 72083)

† Included in a service kit or in an assembly

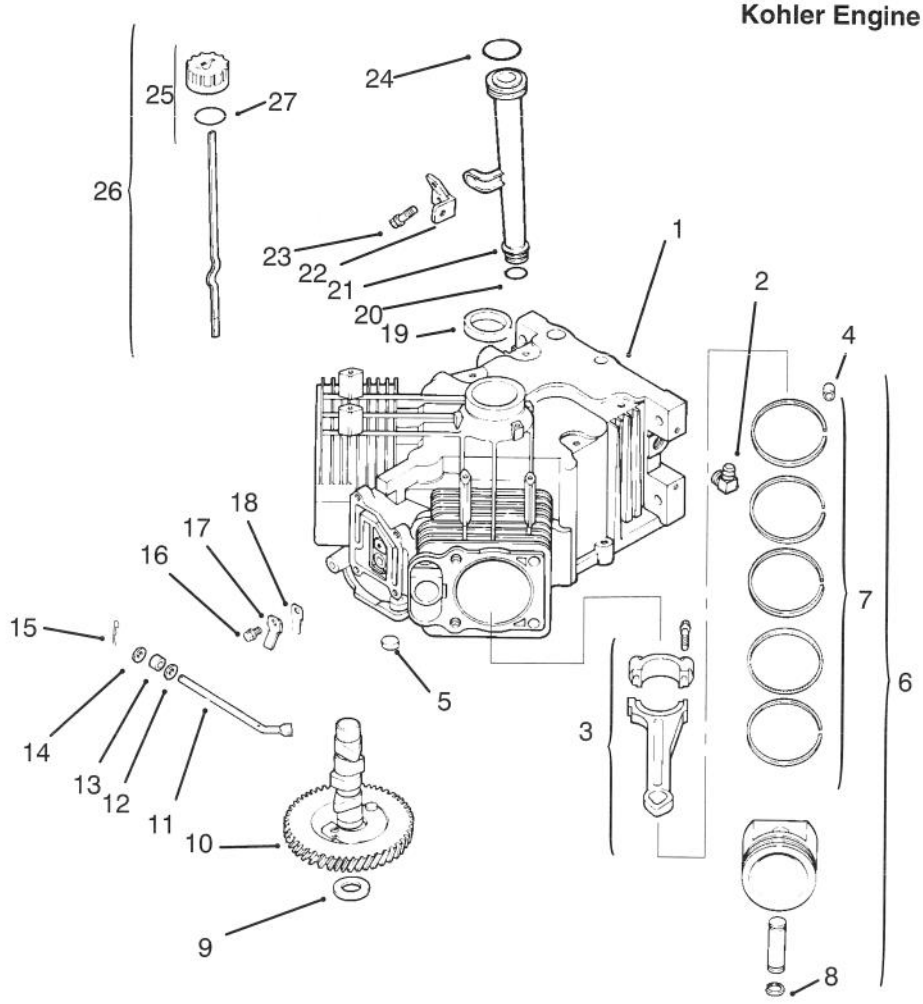

Sheet No.: 202
C–1960

Crankcase

Ref. No.	Part No.	Qty.	Description
16	M–0545010	2	Screw M5x0.8x10 (Only On: 72103, 72083)
17	24 018 04	2	Retainer–Reed (Only On: 72103, 72083)
18	24 402 01	2	Beed–Breather (Only On: 72103, 72083)
19	24 032 01	1	Seal–Oil (Only On: 72103, 72083)
20	12 153 01	1	O Ring–Lower Fill Tube (Only On: 72103, 72083)
21	12 123 04	1	Tube–Oil Fill (Only On: 72103, 72083)
22	24 126 19	1	Bracket–Oil Fill Tube (Only On: 72103, 72083)
23	M–0549016	1	Screw M5x0.8x16 (Only On: 72103, 72083)
24	12 153 02	1	O Ring–Upper Fill Tube (Only On: 72103, 72083)
25	24 038 04	1	Dipstick INC 26–27 (Only On: 72103, 72083)
†26	25 755 13	1	Kit–Oil Cap INC 3 (Only On: 72103, 72083)
†27	12 153 03	1	O Ring–Fill Cap (Only On: 72103, 72083)
*	24 755 03	1	Gasket Set (Only On: 72103, 72083)

† Included in a service kit or in an assembly
* Not illustrated

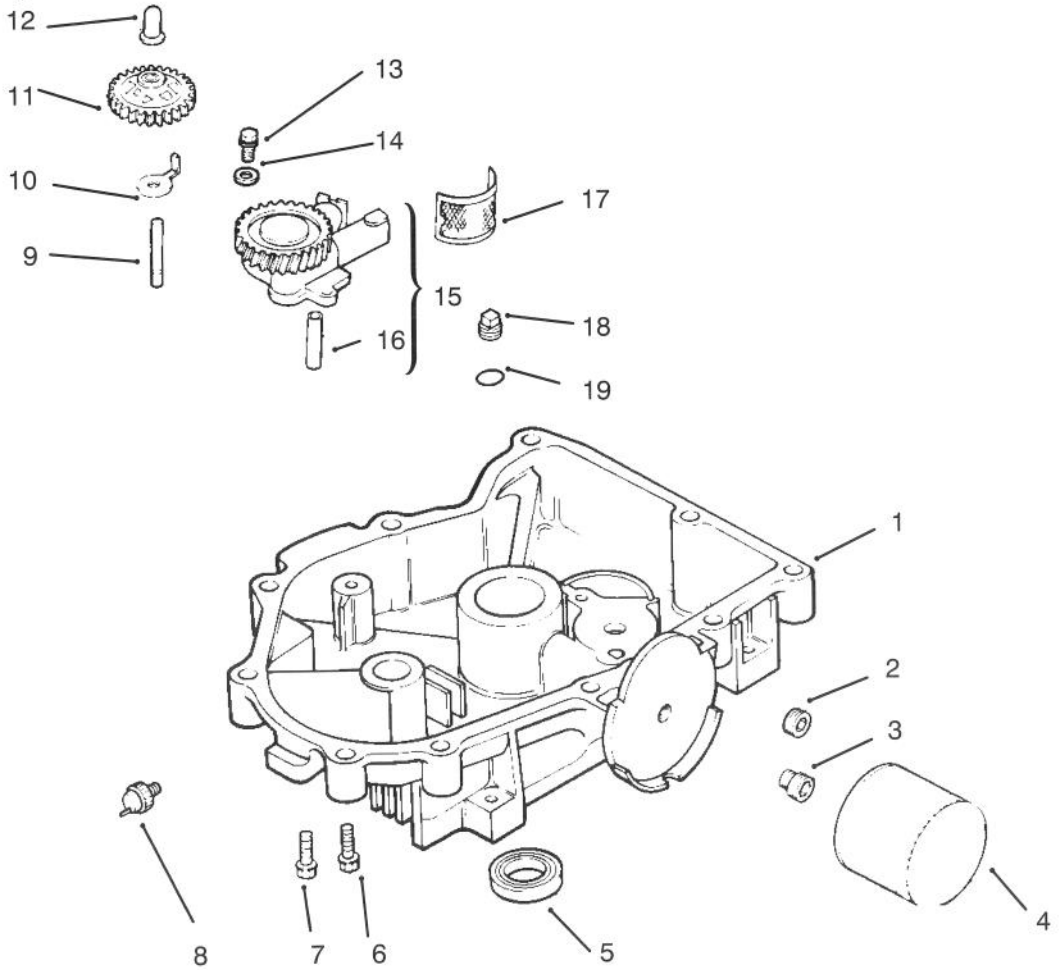

Sheet No.: 203
C–1961

Oil Pan / Lubrication

Ref. No.	Part No.	Qty.	Description
1	24 199 01	1	Oil Pan (Only On: 72103, 72083)
2	X–75–32	1	Plug–HS 3/8 NPTF (Only On: 72103, 72083)
3	24 136 01	1	Nipple–Oil Filter (Only On: 72103, 72083)
4	12 050 01	1	Filter–Oil (Only On: 72103, 72083)
5	52 032 08	1	Seal–Oil (Only On: 72103, 72083)
6	24 086 17	1	Screw M8x1.25x45 (Only On: 72103, 72083)
7	24 086 16	9	Screw M8x1.25x45 (Only On: 72103, 72083)
8	52 099 06	1	Switch–Oil Pressure (Only On: 72103, 72083)
9	12 144 02	1	Shaft–Governor Gear (Only On: 72103, 72083)
10	52 448 02	1	Tab–Locking (Only On: 72103, 72083)
11	24 043 11	1	Governor Gear ASM (Only On: 72103, 72083)
12	12 380 01	1	Pin–Governor Regulating (Only On: 72103, 72083)
13	M–0645025	2	Screw–Valve Cover (Only On: 72103, 72083)
14	SM–0631005	2	Washer–Governor (Only On: 72103, 72083)
15	24 393 05	1	Oil Pump ASM INC 16 (Only On: 72103, 72083)
†16	24 123 05	1	Tube–Oil Pickup (Only On: 72103, 72083)
17	12 162 02	1	Screen–Oil Pickup (Only On: 72103, 72083)
18	X–75–10	1	Plug–SH 3/8 NPTF (Only On: 72103, 72083)
19	24 153 08	1	O Ring (Only On: 72103, 72083)
*	25 113 05	1	Decal–Oil Sentry (Only On: 72103, 72083)

† Included in a service kit or in an assembly
* Not illustrated

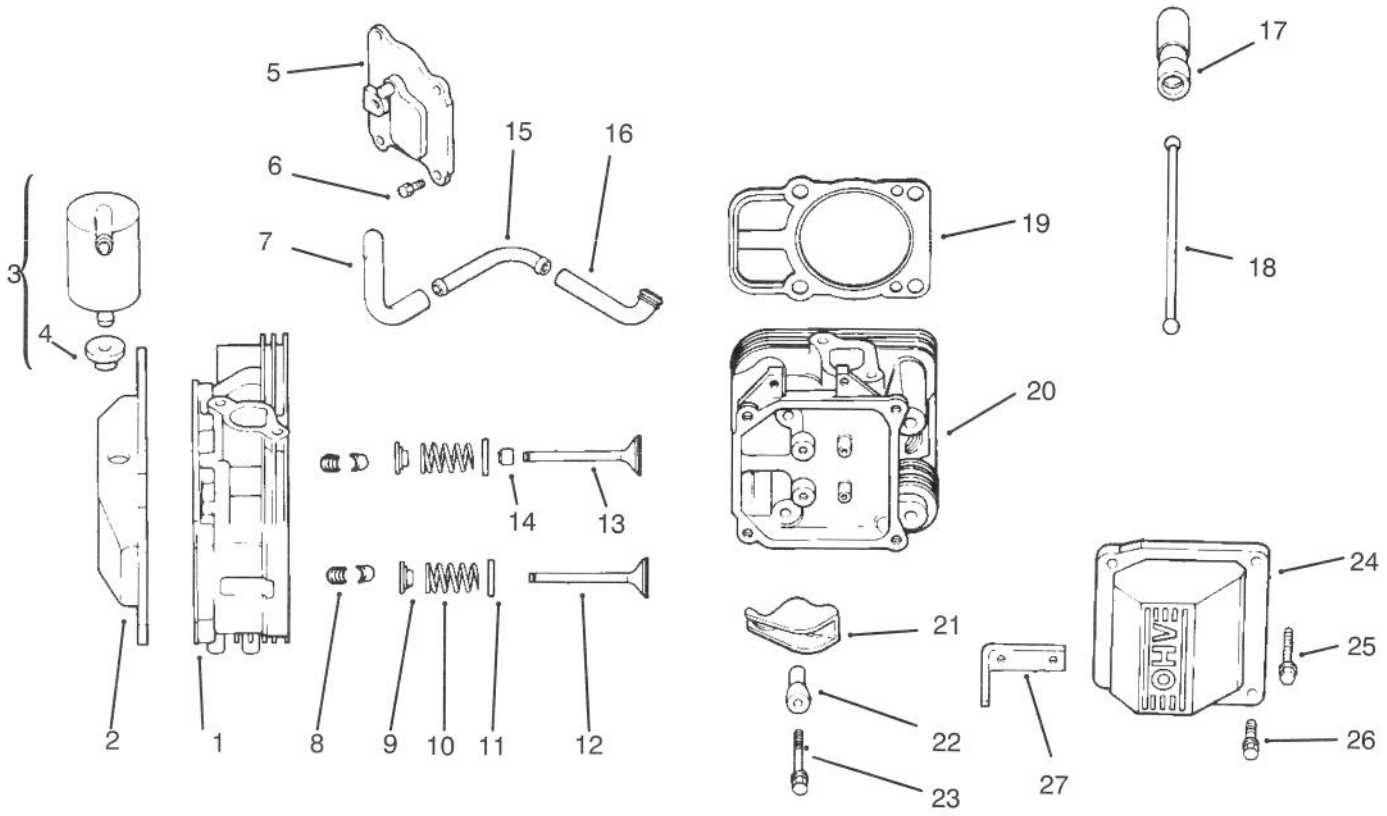

Sheet No.: 204
C–1962

Head / Valve / Breather

Ref. No.	Part No.	Qty.	Description
1	24 318 11	1	Head ASM–#1 Cylinder (Only On: 72103, 72083)
2	24 096 16	1	Cover–Rocker (Only On: 72103, 72083)
3	24 755 20	1	Kit–Breather INC 4 (Only On: 72103, 72083)
†4	25 313 02	1	Grommet–Rubber (Only On: 72103, 72083)
5	24 096 15	1	Cover–Breather (Only On: 72103, 72083)
6	SM–0645020	4	Screw M6x1.0x20 (Only On: 72103, 72083)
7	24 326 05	1	Hose–Breather (Only On: 72103, 72083)
8	12 755 03	4	Kit–Retainer (Only On: 72103, 72083)
9	12 173 01	4	Cap–Valve Spring (Only On: 72103, 72083)
10	24 089 02	4	Spring–Valve (Only On: 72103, 72083)
11	52 018 01	4	Retainer–Spring (Only On: 72103, 72083)
12	24 016 01	2	Valve–Exhaust (Only On: 72103, 72083)
13	24 017 01	2	Valve–Intake (Only On: 72103, 72083)
14	24 032 05	2	Seal–Valve Stem (Only On: 72103, 72083)
15	24 294 02	1	Fitting (Only On: 72103, 72083)
16	24 326 04	1	Hose–Breather (Only On: 72103, 72083)
17	12 351 01	4	Lifter–Valve (Only On: 72103, 72083)
18	24 411 02	4	Rod–Push (Only On: 72103, 72083)
19	24 041 08	2	Gasket–Cylinder Head (Only On: 72103, 72083)
20	24 318 12	1	Head ASM–#2 Cylinder (Only On: 72103, 72083)
21	24 186 02	4	Arm–Rocker (Only On: 72103, 72083)
22	24 194 01	4	Ball–Rocker Pivot (Only On: 72103, 72083)
23	M–0640034	4	Screw M6x1.0x34 (Only On: 72103, 72083)
24	24 096 12	1	Cover–Rocker (Only On: 72103, 72083)
25	12 086 16	8	Screw M10x1.5x91 (Only On: 72103, 72083)
26	M–0651030	8	Screw M6x1.0x30 (Only On: 72103, 72083)

† Included in a service kit or in an assembly

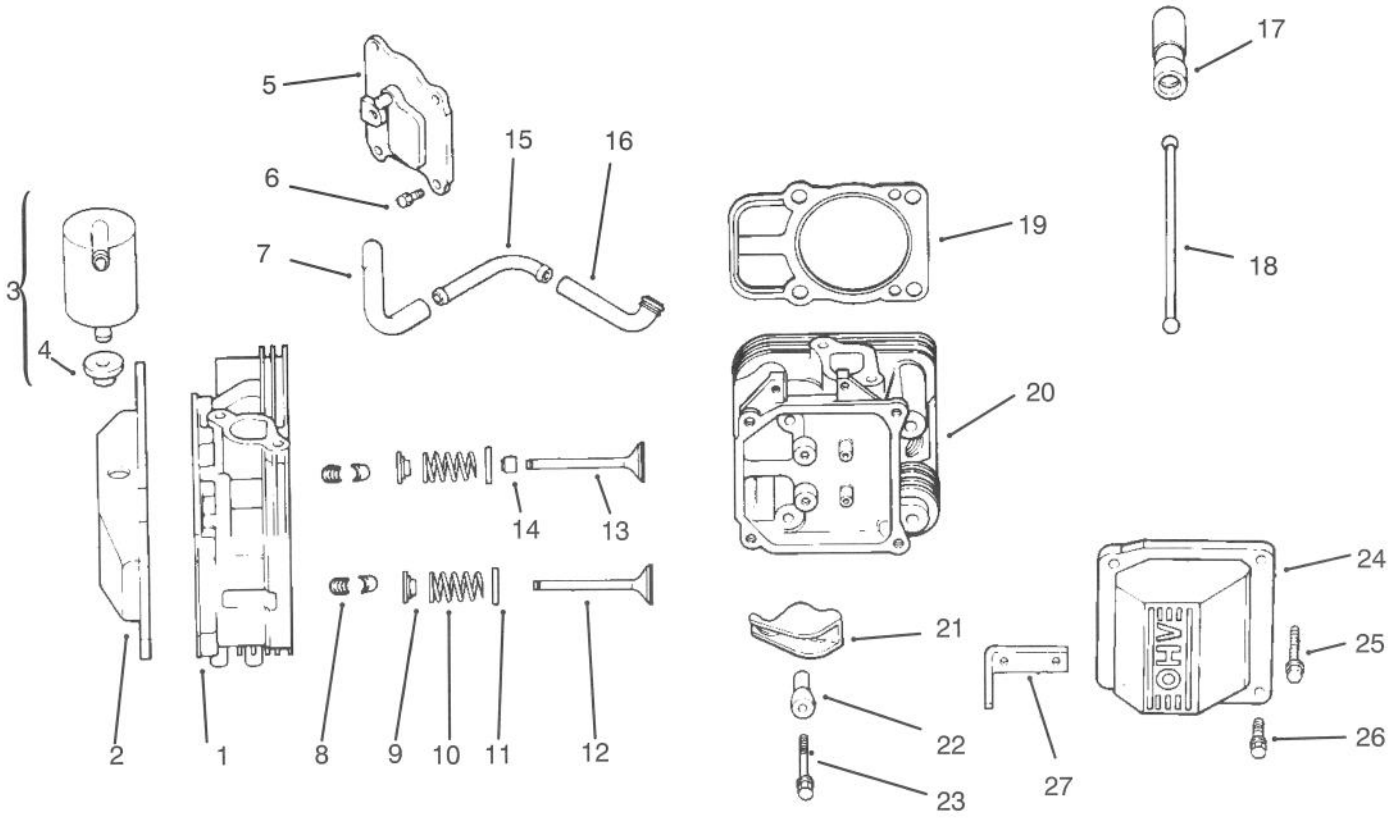

Sheet No.: 204
C–1962

Head / Valve / Breather

Ref. No.	Part No.	Qty.	Description
27	24 445 01	1	Strap–Lifting (Only On: 72103, 72083)

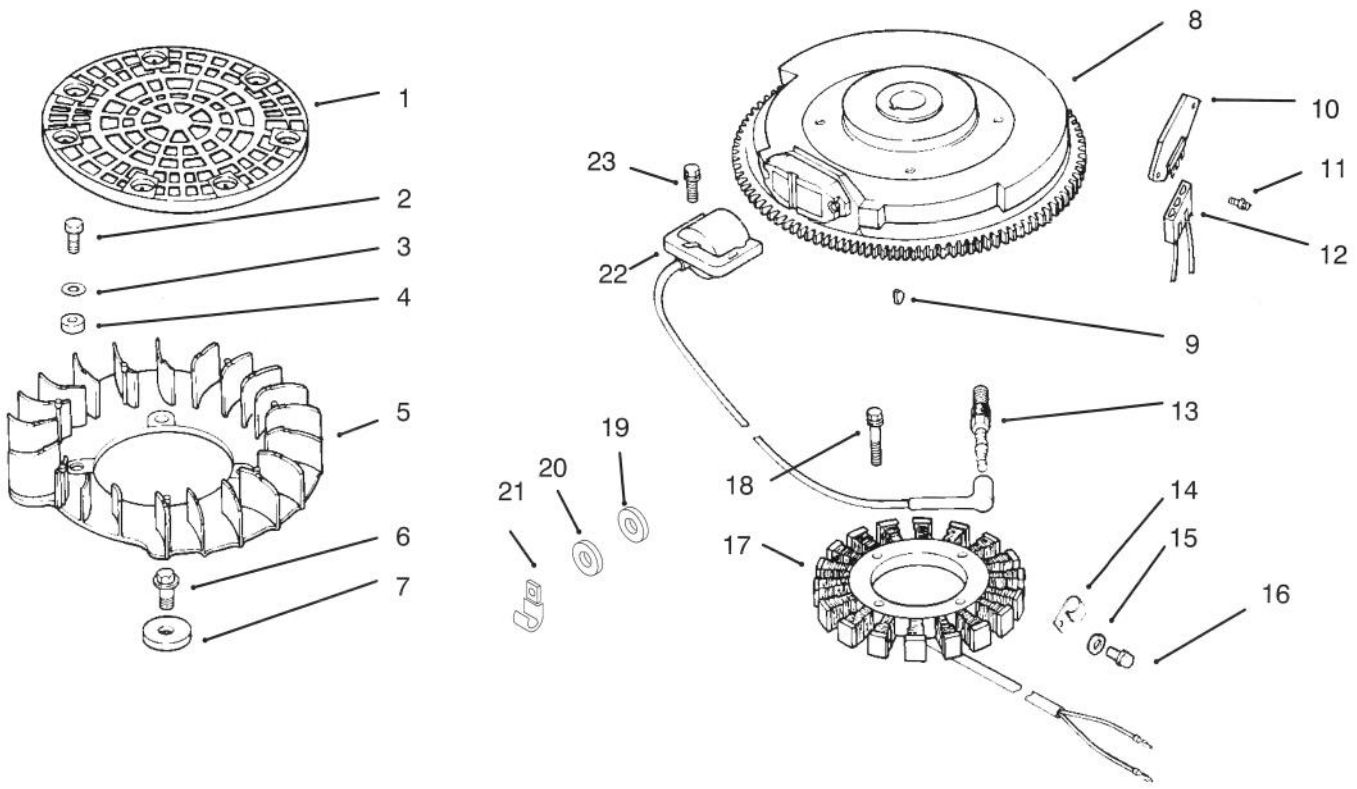

Sheet No.: 205
C–1963

Ignition / Electrical

Ref. No.	Part No.	Qty.	Description
1	24 162 17	1	Screen–Grass (Only On: 72103, 72083)
2	M–0401025	4	Screw M4x0.7x24 (Only On: 72103, 72083)
3	X–25–92	4	Washer–Flat (Only On: 72103, 72083)
4	24 112 04	1	Spacer–Fan (Only On: 72103, 72083)
5	24 157 03	1	Fan (Only On: 72103, 72083)
6	M–0639016	4	Screw M6x1.0x16 (Only On: 72103, 72083)
7	12 112 01	4	Spacer–Fan (Only On: 72103, 72083)
8	24 025 04	1	Flywheel ASM (Only On: 72103, 72083)
9	X–42–15	1	Key (Only On: 72103, 72083)
10	25 403 03	1	Rectifier–Regulator (Only On: 72103, 72083)
11	24 086 06	2	Screw–Phillips (Only On: 72103, 72083)
12	236602	1	Connector–Regulator (Only On: 72103, 72083)
13	12 132 02	2	Spark Plug (Only On: 72103, 72083)
14	48 154 02	1	Clip–Stator Harness (Only On: 72103, 72083)
15	12 468 03	1	Washer–Flywheel Screw (Only On: 72103, 72083)
16	12 086 14	1	Screw–Flywheel Mounting (Only On: 72103, 72083)
17	24 085 01	1	Stator–15 Amp (Only On: 72103, 72083)
18	M–0548025	2	Screw M5x0.8x25 (Only On: 72103, 72083)
19	X–25–63	2	Washer–Flat (Only On: 72103, 72083)
20	X–25–92	2	Washer–Flat (Only On: 72103, 72083)
21	235173	1	Clip–Cable (Only On: 72103, 72083)
22	24 584 01	1	Module–Ignition (Only On: 72103, 72083)
23	M–0545020	4	Screw M5x0.8x20 (Only On: 72103, 72083)
*	24 113 18	1	Decal–Grass Screen (Only On: 72103, 72083)
*	24 176 06	1	Harness–Wire (Only On: 72103, 72083)
*	24 518 04	1	Lead–Green (Only On: 72103, 72083)

* Not illustrated

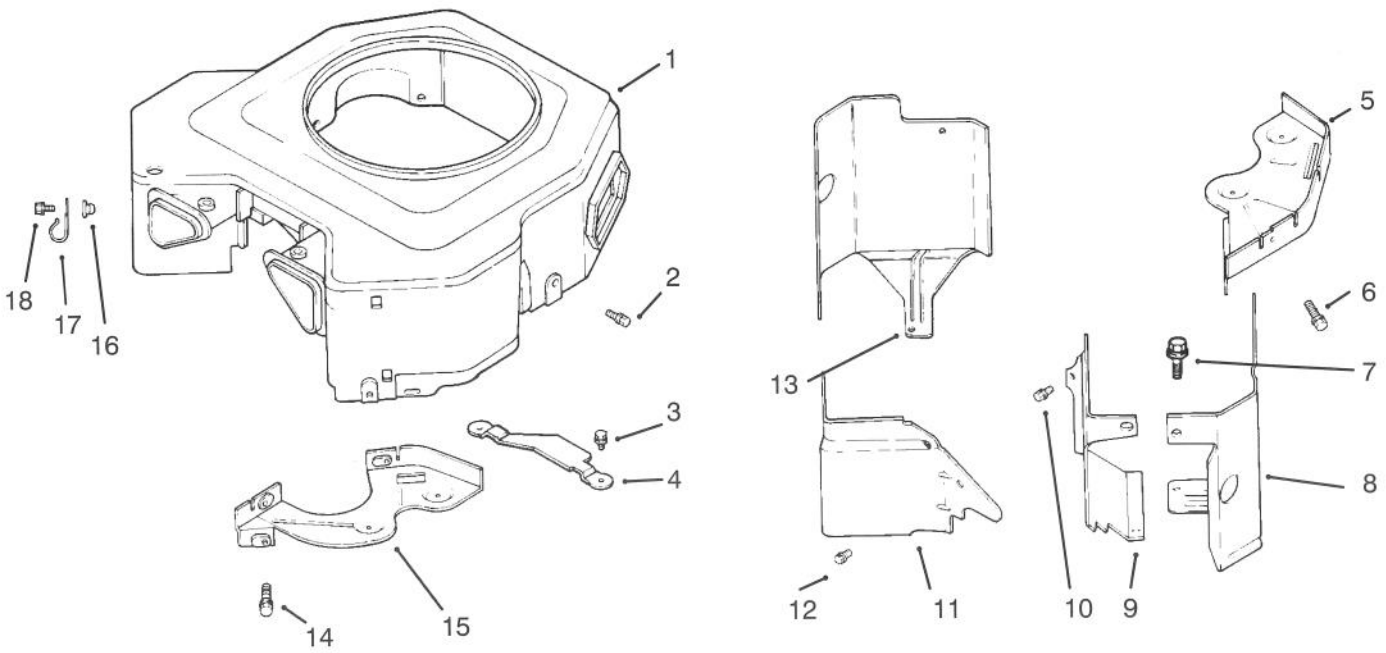

Sheet No.: 206
C–1964

Blower Housing & Baffles

Ref. No.	Part No.	Qty.	Description
1	24 027 20	1	Housing–Blower ASM (Only On: 72103, 72083)
2	M–0549016	3	Screw M5x0.8x16 (Only On: 72103, 72083)
3	SM–0645016	4	Screw M6x1.0x16 (Only On: 72103, 72083)
4	24 314 05	1	Guard–Flywheel (Only On: 72103, 72083)
5	24 146 02	1	Plate–Backing #2 Side (Only On: 72103, 72083)
6	M–0545020	2	Screw M5x0.8x20 (Only On: 72103, 72083)
7	M–0551016	1	Screw M5x0.8x14 (Only On: 72103, 72083)
8	24 063 20	1	Baffle–Cylinder #2 Side (Only On: 72103, 72083)
9	24 063 15	1	Baffle–Valley #1 Side (Only On: 72103, 72083)
10	M–0549010	2	Screw M5x0.8x10 (Only On: 72103, 72083)
11	24 063 14	1	Baffle–Valley #2 Side (Only On: 72103, 72083)
12	M–0549016	2	Screw M5x0.8x16 (Only On: 72103, 72083)
13	24 063 06	1	Baffle–Cylinder #1 Side (Only On: 72103, 72083)
14	M–0649016	2	Screw M6x1.0x16 (Only On: 72103, 72083)
15	24 146 14	1	Plate–Backing #1 Side (Only On: 72103, 72083)
16	24 100 01	4	Nut–Plastic (Only On: 72103, 72083)
17	47 154 01	1	Clip–Cable (Only On: 72103, 72083)
18	24 086 12	1	Screw–Cable Clip (Only On: 72103, 72083)
*	24 100 02	2	Nut INC W/Blower Hsng (Only On: 72103, 72083)
*	24 113 10	1	Decal–Horsepower (Only On: 72083, 72103)
*	25 139 16	1	Plug INC W/Blower Hsng (Only On: 72103, 72083)

* Not illustrated

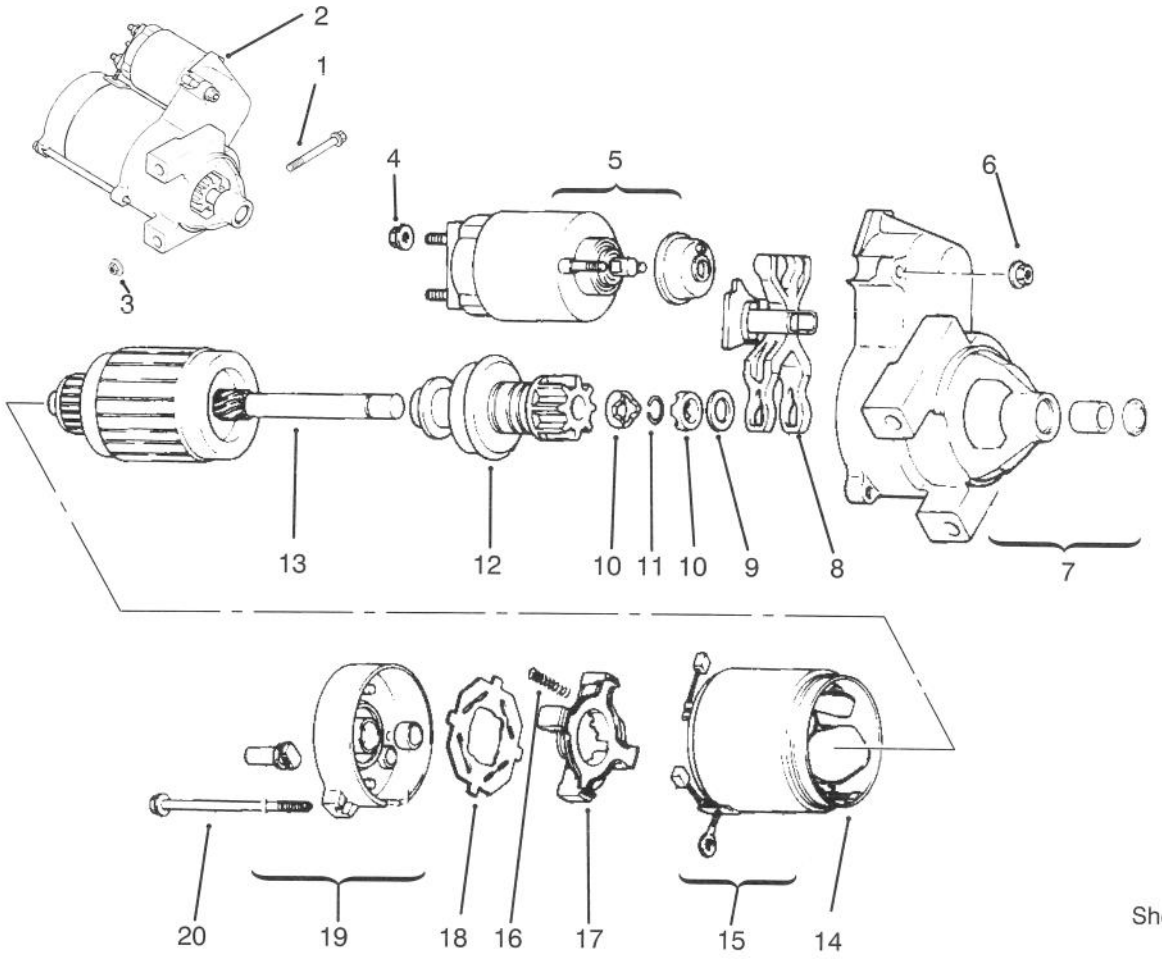

Sheet No.: 207
C–1965

Starting System

Ref. No.	Part No.	Qty.	Description
1	M–0839080	2	Screw M8x1.25x80 (Only On: 72103, 72083)
2	12 098 03	1	Starter INC 4–20 (Only On: 72103, 72083)
3	M–0841080	1	Nut M8x1.25 (Only On: 72103, 72083)
†4	52 100 09	1	Nut–Starter (Only On: 72103, 72083)
†5	52 435 02	1	Solenoid (Only On: 72103, 72083)
†6	52 100 10	2	Nut Starter (Only On: 72103, 72083)
†7	12 081 02	1	Cap–Drive End (Only On: 72103, 72083)
†8	12 090 10	1	Lever Starter Drive (Only On: 72103, 72083)
†9	42 468 14	1	Washer–Thrust (Only On: 72103, 72083)
†10	52 100 08	2	Nut–Stop Collar (Only On: 72103, 72083)
†11	52 141 03	1	Ring–Retainer (Only On: 72103, 72083)
†12	12 239 01	1	Drive–Pinion (Only On: 72103, 72083)
†13	12 170 03	1	Armature–Starter (Only On: 72103, 72083)
†14	12 471 01	1	Frame (Only On: 72103, 72083)
†15	52 221 01	1	Kit–Brush INC 16 (Only On: 72103, 72083)
†16	52 089 09	4	Spring–Brush (Only On: 72103, 72083)
†17	52 323 03	1	Holder–Brush (Only On: 72103, 72083)
†18	52 168 01	1	Insulator (Only On: 72103, 72083)
†19	12 301 01	1	Cap–Commutator End (Only On: 72103, 72083)
†20	52 211 05	2	Bolt (Only On: 72103, 72083)

† Included in a service kit or in an assembly

3316–737

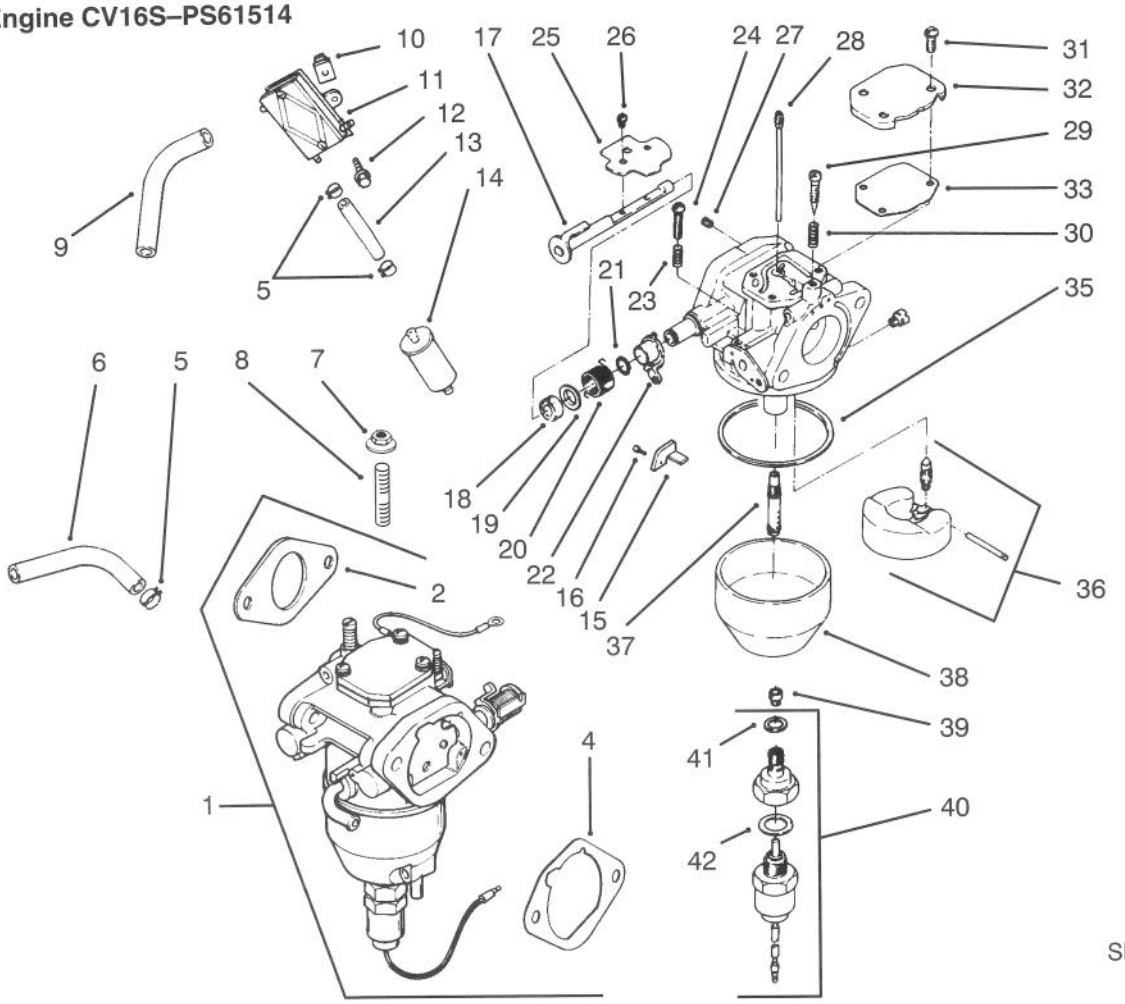

Sheet No.: 208
C–1966

Fuel System

Ref. No.	Part No.	Qty.	Description
1	24 853 24	1	Kit–Carb INC 2/4/15–42 (Only On: 72103, 72083)
†2	24 041 15	1	Gasket–Carburetor (Only On: 72103, 72083)
†4	24 041 14	1	Gasket–A/C Base (Only On: 72103, 72083)
5	X–426–9	6	Clamp–Hose (Only On: 72103, 72083)
6	24 353 03	1	Line–Fuel 10 1/2" (Only On: 72103, 72083)
7	SM–0641060	2	Nut M6x1.0 (Only On: 72103, 72083)
8	M–0629095	2	Stud M6x1.0x95 (Only On: 72103, 72083)
9	52 353 22	1	Line–Fuel 12" (Only On: 72103, 72083)
10	24 100 01	2	Nut–Plastic (Only On: 72103, 72083)
11	24 393 04	1	Pump–Fuel (Only On: 72103, 72083)
12	24 086 12	2	Screw–Cable Clip (Only On: 72103, 72083)
13	25 353 15	1	Line–Fuel 3 1/2" (Only On: 72103, 72083)
14	25 050 02	1	Filter–Fuel (Only On: 72103, 72083)
†15	24 126 29	1	Bracket–Throttle Stop (Only On: 72103, 72083)
†16	M–0259006	1	Screw M2.5x45x5.5 (Only On: 72103, 72083)
†17	24 144 15	1	Shaft–Choke (Only On: 72103, 72083)
†18	24 468 05	1	Washer (Only On: 72103, 72083)
†19	24 241 01	1	Collar–Choke (Only On: 72103, 72083)
†20	24 089 22	1	Spring–Choke Return (Only On: 72103, 72083)
†21	24 141 04	1	Ring–Choke Lever (Only On: 72103, 72083)
†22	24 090 10	1	Lever–Choke (Only On: 72103, 72083)
†23	24 089 24	1	Spring–Throttle Screw (Only On: 72103, 72083)
†24	24 086 19	1	Screw–Throttle Adjust (Only On: 72103, 72083)
†25	24 462 02	1	Valve–Choke (Only On: 72103, 72083)
†26	24 086 20	4	Screw–Throttle Shaft (Only On: 72103, 72083)
†27	24 337 27	1	Jet–Air Bleed (Only On: 72103, 72083)

† Included in a service kit or in an assembly

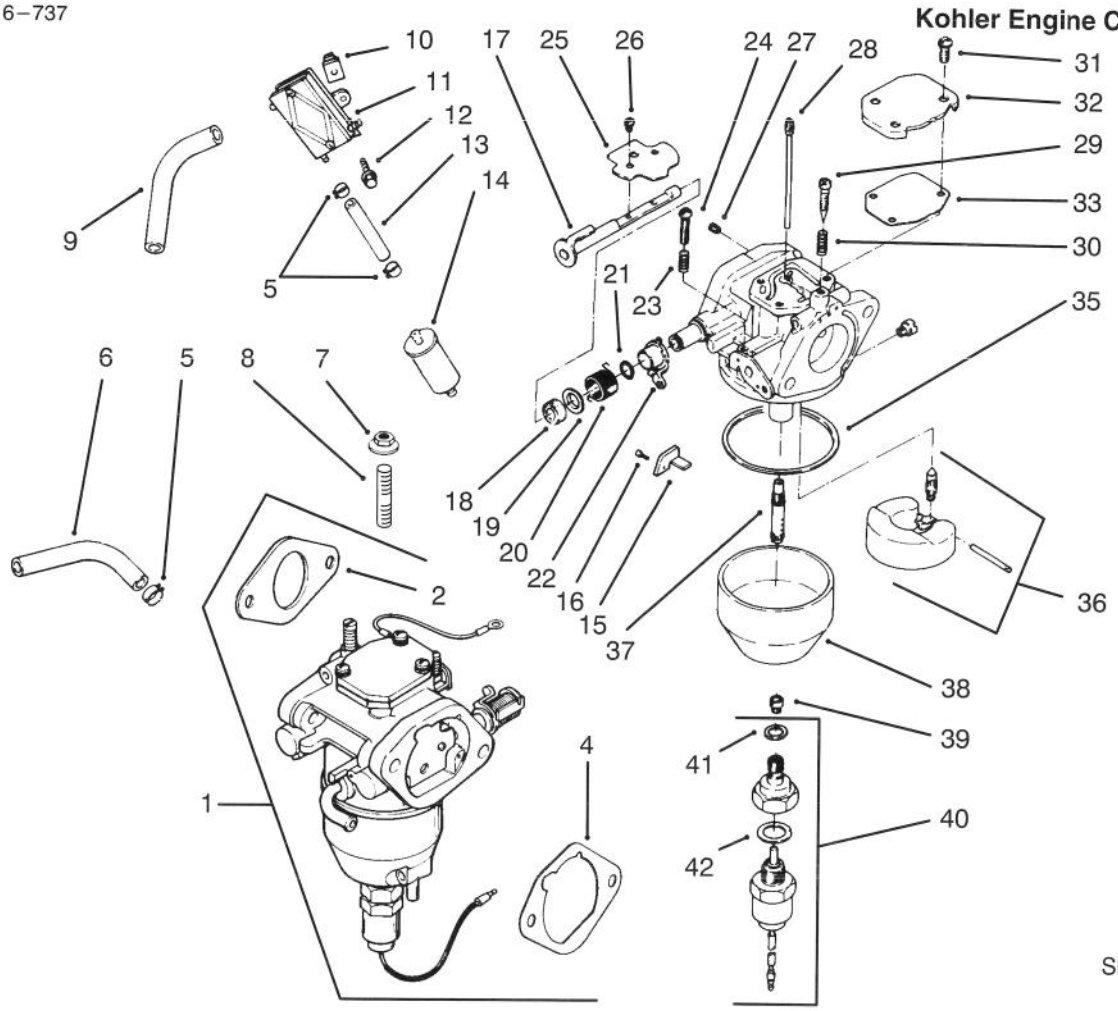

Sheet No.: 208
C–1966

Fuel System

Ref. No.	Part No.	Qty.	Description
†28	24 337 11	1	Jet–Slow (Only On: 72103, 72083)
†29	24 086 22	1	Screw–Idle Adjust (Only On: 72103, 72083)
†30	24 089 23	1	Spring–Idle Adjust Screw (Only On: 72103, 72083)
†31	24 086 21	3	Screw (Only On: 72103, 72083)
†32	24 096 13	1	Cover–Passage (Only On: 72103, 72083)
†33	24 041 18	1	Gasket–Passage Cover (Only On: 72103, 72083)
†35	24 041 19	1	Gasket–Float Chamber (Only On: 72103, 72083)
†36	24 757 05	1	Kit–Float Repair (Only On: 72103, 72083)
†37	24 369 01	1	Nozzle–Main (Only On: 72103, 72083)
†38	24 234 01	1	Chamber–Float (Only On: 72103, 72083)
†39	24 337 20	1	Jet–Main (Only On: 72103, 72083)
†40	24 755 15	1	Kit–Solenoid INC 41–42 (Only On: 72103, 72083)
†41	24 041 21	1	Gasket–Chamber Screw (Only On: 72103, 72083)
†42	24 041 20	1	Gasket–Solenoid (Only On: 72103, 72083)
*	24 041 15	1	Gasket–Carburetor (Only On: 72103, 72083)
*	24 063 22	1	Baffle–Carburetor (Only On: 72103, 72083)
*	24 755 25	1	Kit–Hi Alt 1500–3000 M (Only On: 72103, 72083)
*	24 755 26	1	Kit–Hi Alt Over 3000 M (Only On: 72103, 72083)
*	24 757 06	1	Kit–Carburetor Repair (Only On: 72103, 72083)

† Included in a service kit or in an assembly
* Not illustrated

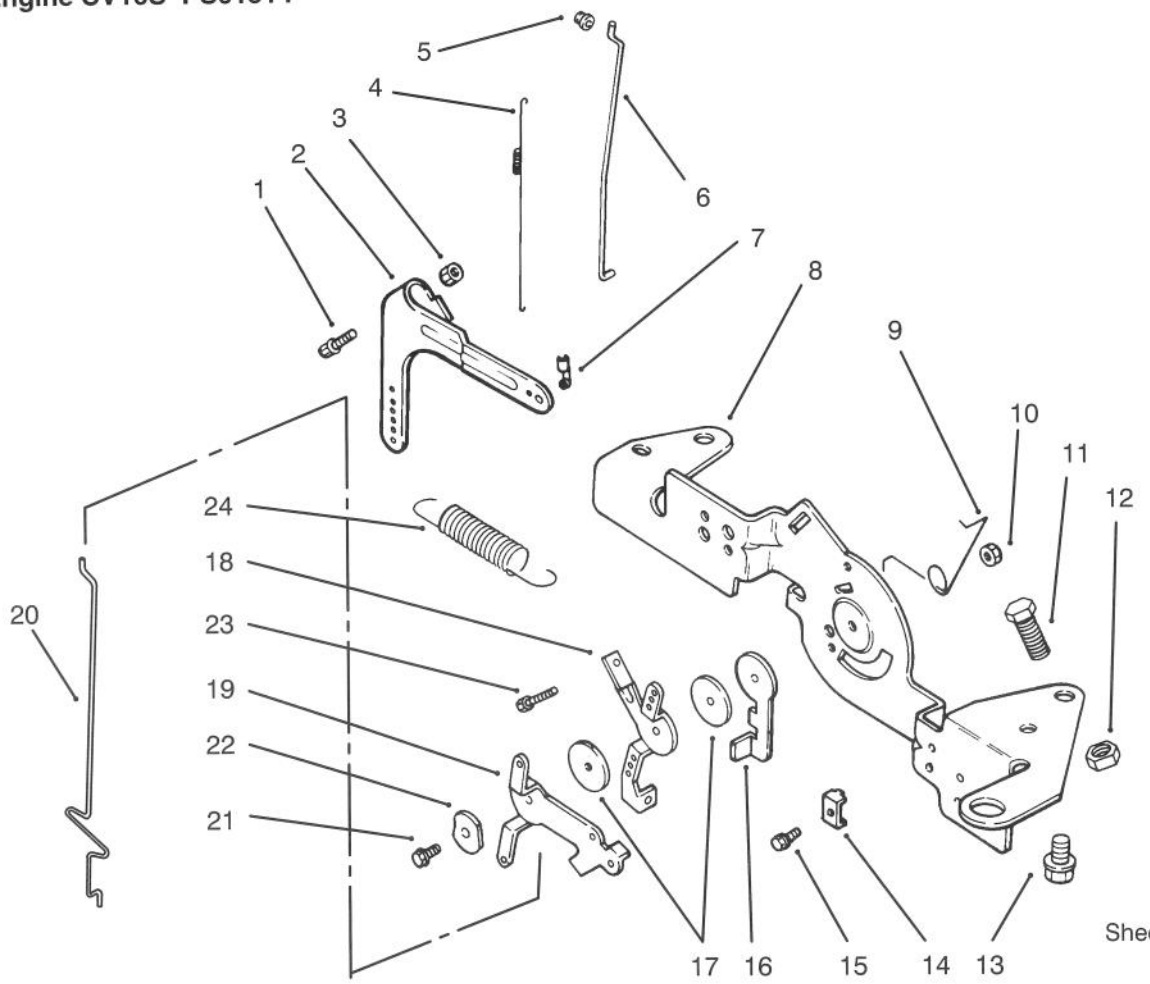

Sheet No.: 209
C–1967

Engine Controls

Ref. No.	Part No.	Qty.	Description
1	SM–0642025	1	Screw M6x1.0x25 (Only On: 72103, 72083)
2	24 090 11	1	Lever–Governor (Only On: 72103, 72083)
3	SM–0641060	1	Nut M6x1.0 (Only On: 72103, 72083)
4	24 089 01	1	Spring–Linkage (Only On: 72103, 72083)
5	25 158 08	1	Bushing–Linkage (Only On: 72103, 72083)
6	24 079 04	1	Linkage–Throttle (Only On: 72103, 72083)
7	25 158 11	1	Bushing–Linkage (Only On: 72103, 72083)
8	24 126 13	1	Bracket–Control (Only On: 72103, 72083)
9	24 089 03	1	Spring–Choke Return (Only On: 72103, 72083)
10	M–0547O50	1	Nut M5x0.8 (Only On: 72103, 72083)
11	SM–0545016	1	Screw M5x0.8x16 (Only On: 72103, 72083)
12	M–0446030	1	Nut–Hex M4x0.7 (Only On: 72103, 72083)
13	SM–0645016	4	Screw M6x1.0x16 (Only On: 72103, 72083)
14	12 237 01	2	Clamp–Cable (Only On: 72103, 72083)
15	SM–0545016	2	Screw M5x0.8x16 (Only On: 72103, 72083)
16	24 090 07	1	Lever–Throttle Actuator (Only On: 72103, 72083)
17	24 468 01	3	Washer (Only On: 72103, 72083)
18	24 090 03	1	Lever–Throttle Control (Only On: 72103, 72083)
19	24 090 05	1	Lever–Choke (Only On: 72103, 72083)
20	24 079 05	1	Linkage–Choke (Only On: 72103, 72083)
21	M–0545020	1	Screw M5x0.8x20 (Only On: 72103, 72083)
22	41 468 03	1	Washer–Wave (Only On: 72103, 72083)
23	M–0401025	1	Screw M4x0.7x24 (Only On: 72103, 72083)
24	24 089 18	1	Spring–Governor (Only On: 72103, 72083)

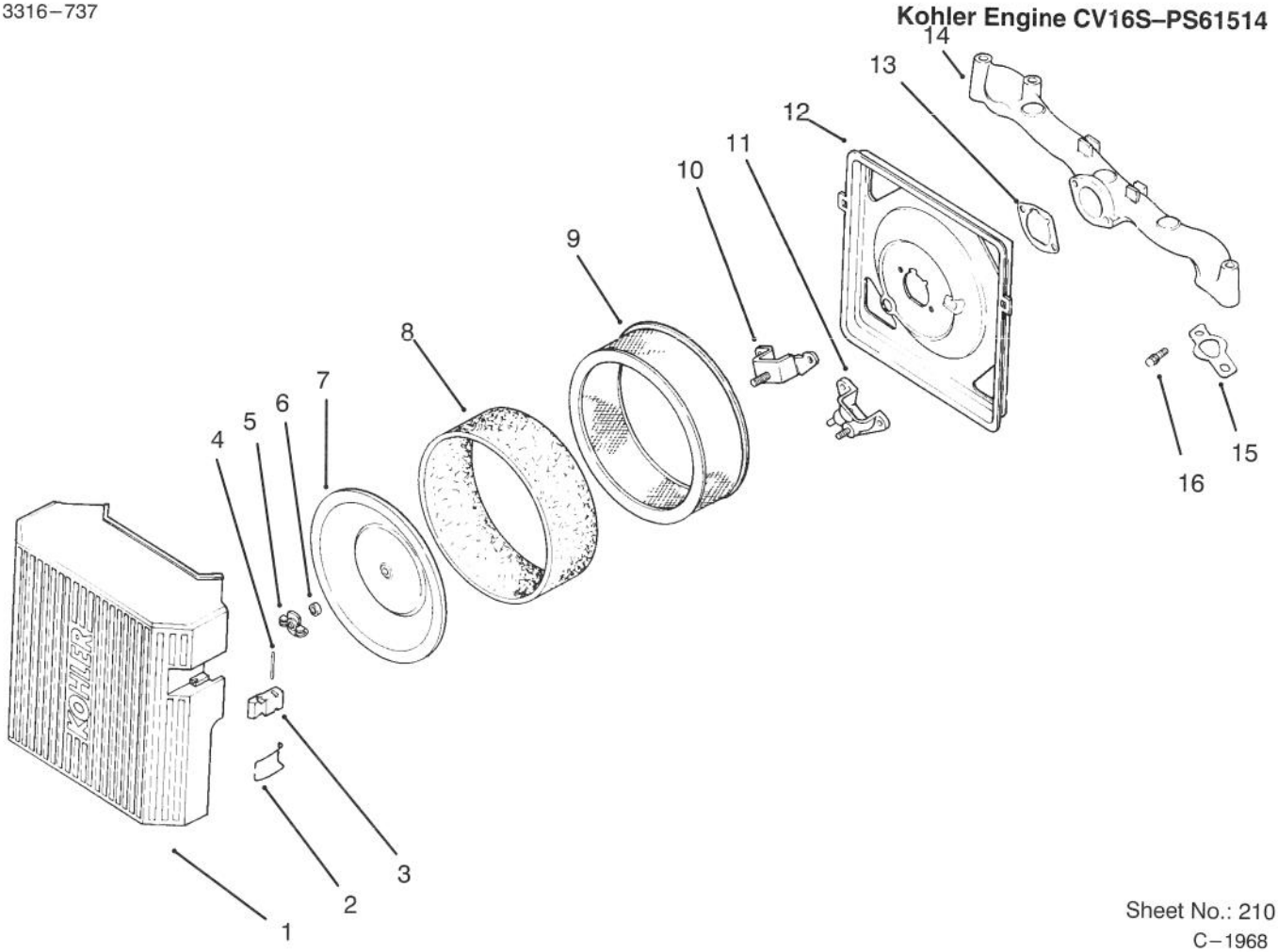

Sheet No.: 210
C–1968

Air Intake / Filtration

Ref. No.	Part No.	Qty.	Description
1	24 743 01	1	Kit–A/C Cover INC 2–4 (Only On: 72103, 72083)
†2	24 089 04	2	Spring–Latch (Only On: 72103, 72083)
†3	24 344 01	2	Latch–Lever (Only On: 72103, 72083)
†4	24 380 03	2	Pin–Latch Lever (Only On: 72103, 72083)
5	12 100 01	1	Nut–Wing (Only On: 72103, 72083)
6	24 032 03	1	Seal–Air Intake (Only On: 72103, 72083)
7	24 096 01	1	Cover–Inner Air Cleaner (Only On: 72103, 72083)
8	24 083 02	1	Element–Precleaner (Only On: 72103, 72083)
9	47 083 03	1	Element–Air Cleaner (Only On: 72103, 72083)
10	24 109 01	1	Cup–Fuel Spitback (Only On: 72103, 72083)
11	24 041 13	1	Gasket–Fuel Spitback Cup (Only On: 72103, 72083)
12	24 094 02	1	Base–Air Cleaner (Only On: 72103, 72083)
13	24 041 14	1	Gasket–A/C Base (Only On: 72103, 72083)
14	24 164 06	1	Manifold–Intake (Only On: 72103, 72083)
15	24 041 01	2	Gasket–Intake Manifold (Only On: 72103, 72083)
16	M–0639055	4	Screw M6x1.0x18 (Only On: 72103, 72083)

† Included in a service kit or in an assembly

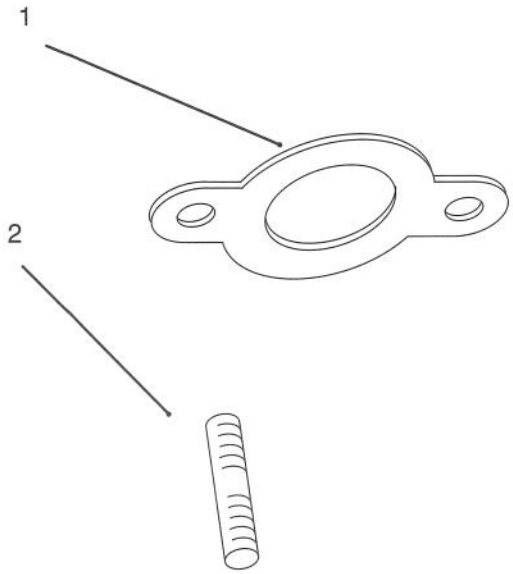

Sheet No.: 211
C–1969

Exhaust

Ref. No.	Part No.	Qty.	Description
1	24 041 02	2	Gasket–Exhaust (Only On: 72103, 72083)
2	M–0829033	4	Stud M8x1.25x20 (Only On: 72103, 72083)

Peerless Transaxle 820–024

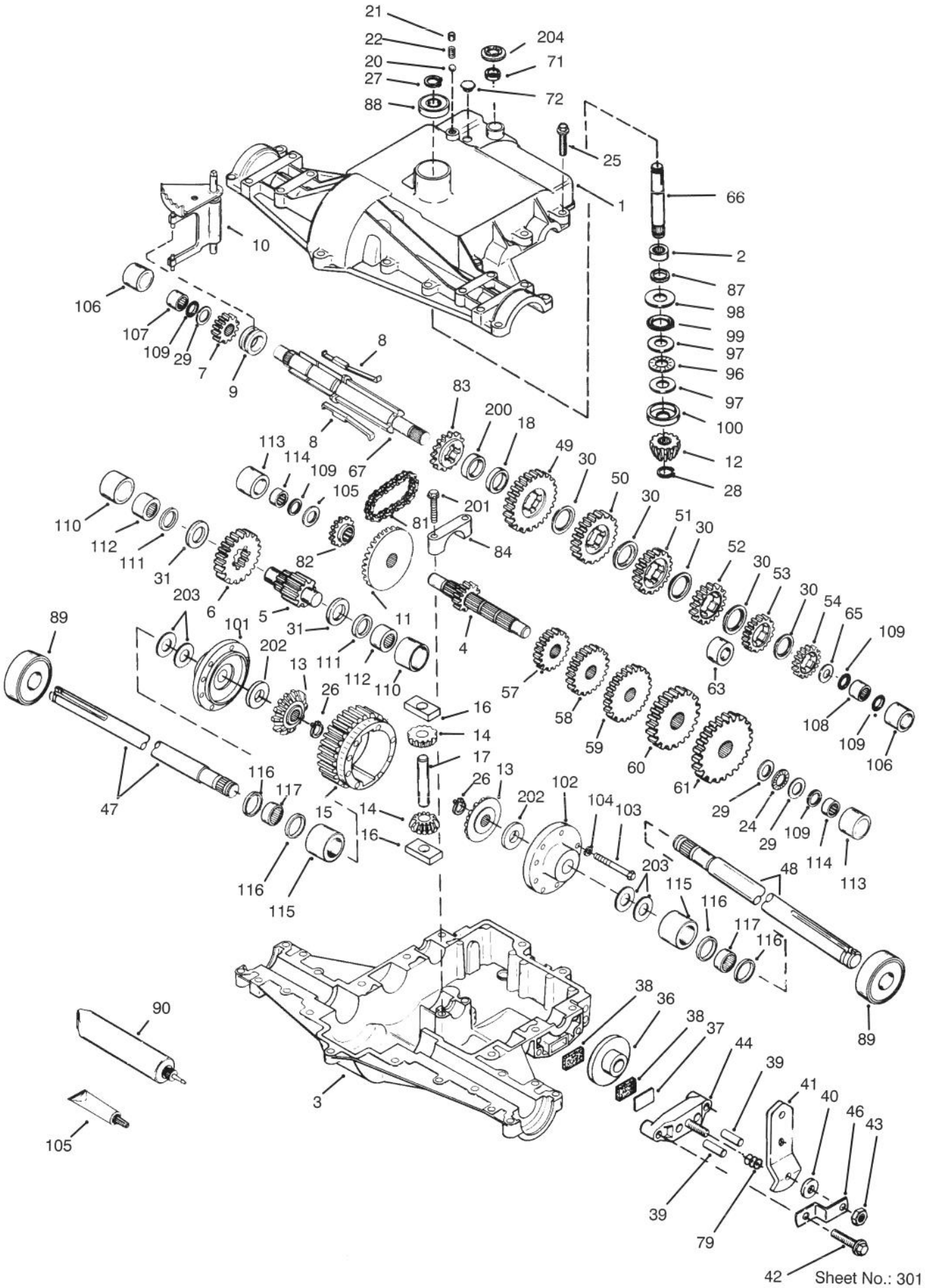

Sheet No.: 301
c–1858

Peerless Transaxle 820–024

Ref. No.	Part No.	Qty.	Description
1	772098A	1	Cover–Transaxle (Only On: 72042, 72062)
2	780155	1	Bearing–Needle (Only On: 72042, 72062)
3	770088	1	Case–Transaxle (Only On: 72042, 72062)
4	776291	1	Countershaft–Gear 9t (Only On: 72042, 72062)
5	776275	1	Shaft–Output (Only On: 72042, 72062)
6	778247	1	Gear–Output 35t (Only On: 72042, 72062)
7	778253	1	Gear–Spur 15t (Only On: 72042, 72062)
8	792138	4	Key–Shift (Only On: 72042, 72062)
9	784216	1	Collar–Shift (Only On: 72042, 72062)
10	784342	1	Fork–Shift (Only On: 72042, 72062)
11	778246	1	Gear–Bevel 33t (Only On: 72042, 72062)
12	778245	1	Pinion–Input Bevel 13t (Only On: 72042, 72062)
13	778198	2	Gear–Bevel 16t (Only On: 72042, 72062)
14	778197	2	Pinion–Bevel 10t (Only On: 72042, 72062)
15	778248	1	Gear–Ring (Only On: 72042, 72062)
16	786027	2	Block–Drive (Only On: 72042, 72062)
17	786019	1	Pin–Drive (Only On: 72042, 72062)
18	786121	1	Spacer .350–.340 Thick (Only On: 72042, 72062)
20	792077	1	Ball–Steel (Only On: 72042, 72062)
21	792078	1	Screw–Set 3/8–16x3/8 (Only On: 72042, 72062)
22	792079	1	Spring (Only On: 72042, 72062)
24	780071	1	Bearing–Thrust (Only On: 72042, 72062)
25	792129	17	Screw 5/16–18x1 1/4 (Only On: 72042, 72062)
26	792018	2	Ring–Retaining (Only On: 72042, 72062)
27	792018	1	Ring–Retaining (Only On: 72042, 72062)
28	788040	1	Ring–Retaining (Only On: 72042, 72062)
29	780072	3	Washer (Only On: 72042, 72062)
30	780108	5	Washer (Only On: 72042, 72062)
31	780128	2	Washer (Only On: 72042, 72062)
36	790043	1	Washer (Only On: 72042, 72062)
37	790007	1	Plate–Brake Pad (Only On: 72042, 72062)
38	799021	1	Pad–Brake 2/Pkg (Only On: 72042, 72062)
39	786026	2	Pin–Dowel (Only On: 72042, 72062)
40	792076A	1	Washer (Only On: 72042, 72062)
41	790013	1	Lever–Brake (Only On: 72042, 72062)
42	792073	2	Screw 1/4–20x1 1/4 (Only On: 72042, 72062)
43	792075	1	Nut–Lock 5/16x24 (Only On: 72042, 72062)
44	790025	1	Holder–Brake Pad (Only On: 72042, 72062)
46	786086	1	Bracket–Brake Lever (Only On: 72042, 72062)
47	774958	1	Axle 12 9/16" Long (Only On: 72042, 72062)
48	774959	1	Axle 16 7/16" Long (Only On: 72042, 72062)
49	778216A	1	Gear–Spur 41t (Only On: 72042, 72062)
50	778206A	1	Gear–Spur 35t (Only On: 72042, 72062)
51	778205A	1	Gear–Spur 30t (Only On: 72042, 72062)
52	778204A	1	Gear Spur 25t (Only On: 72042, 72062)
53	778203A	1	Gear Spur 22t (Only On: 72042, 72062)
54	778273	1	Gear Spur 19t (Only On: 72042, 72062)
57	778199	1	Gear Spur 15t (Only On: 72042, 72062)
58	778200	1	Gear Spur 20t (Only On: 72042, 72062)
59	778201	1	Gear Spur 25t (Only On: 72042, 72062)
60	778202	1	Gear Spur 28t (Only On: 72042, 72062)
61	778222	1	Gear Spur 30t (Only On: 72042, 72062)
65	780109	1	Washer (Only On: 72042, 72062)
66	776293	1	Shaft–Input 30.910" Lg (Only On: 72042, 72062)
67	776313	1	Shaft–Shifter/Brake (Only On: 72042, 72062)
71	788069	1	Ring–Square Cut (Only On: 72042, 72062)
72	792074	1	Plug–Threaded 9/16–18 (Only On: 72042, 72062)
79	792144	1	Spring (Only On: 72042, 72062)
81	786062A	1	Chain–Roller #41 22" Lg (Only On: 72042, 72062)
82	786061	1	Sprocket 10t (Only On: 72042, 72062)

Peerless Transaxle 820–024

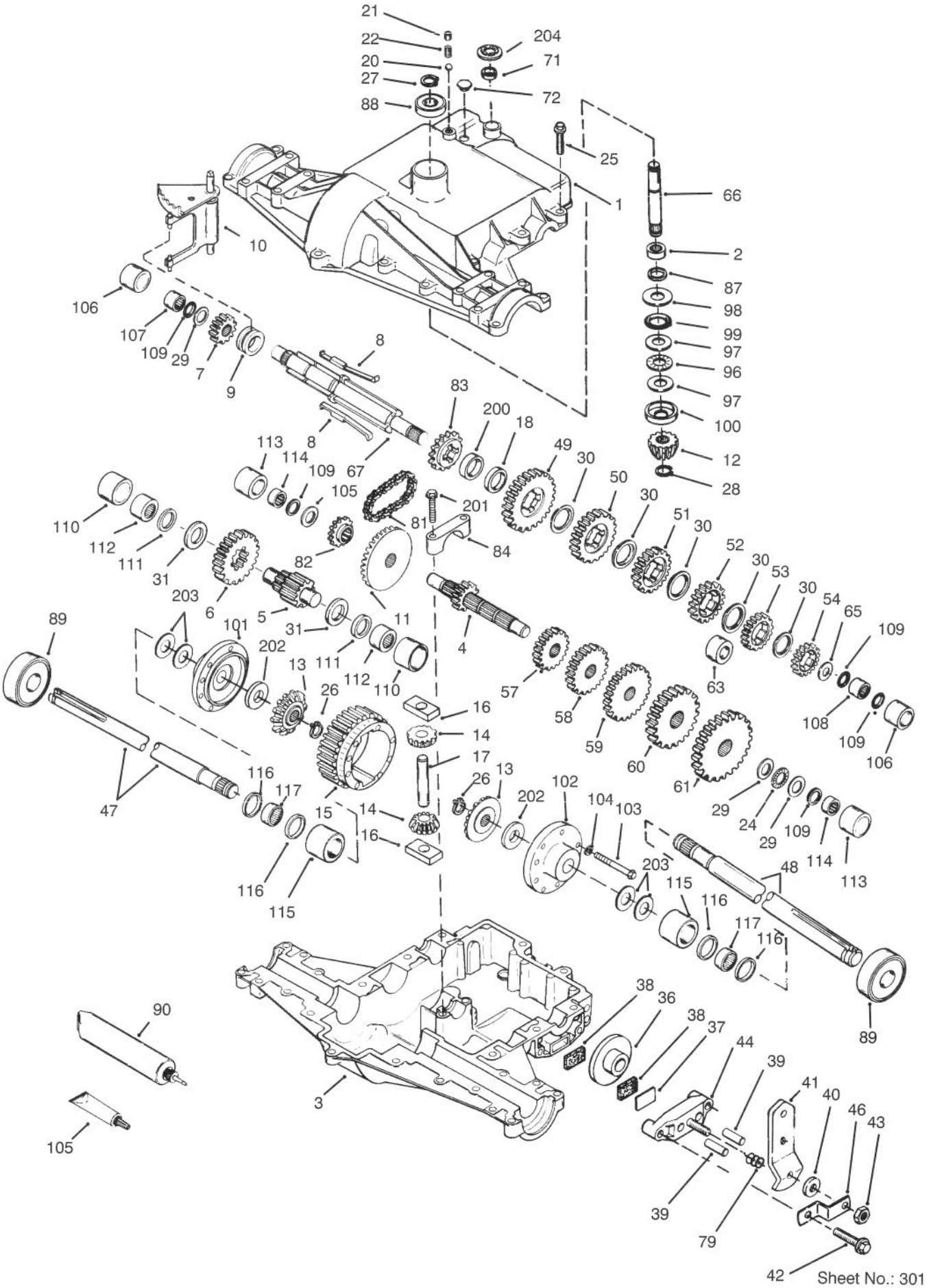

Peerless Transaxle 820–024

Ref. No.	Part No.	Qty.	Description
83	786124	1	Sprocket–Reverse 14t (Only On: 72042, 72062)
84	786131	1	Cap–Bearing (Only On: 72042, 72062)
87	788042	1	Seal–Oil 3/4" (Only On: 72042, 72062)
88	780119	1	Bearing–Ball (Only On: 72042, 72062)
89	780050	2	Bearing–Ball (Only On: 72042, 72062)
90	788067B	1	Grease 32 Oz Bentonite (Only On: 72042, 72062)
96	780084	1	Bearing–Thrust (Only On: 72042, 72062)
97	780051	2	Washer (Only On: 72042, 72062)
98	780165	1	Washer (Only On: 72042, 72062)
99	788077	1	O Ring (Only On: 72042, 72062)
100	780166	1	Washer–Cupped (Only On: 72042, 72062)
101	774833	1	Carrier–Differential (Only On: 72042, 72062)
102	774834	1	Carrier–Differential (Only On: 72042, 72062)
103	792020	8	Screw 14–20x2 1/4 (Only On: 72042, 72062)
104	792006	8	Washer–Lock (Only On: 72042, 72062)
105	780153	1	Washer (Only On: 72042, 72062)
106	786144	1	Sleeve (Only On: 72042, 72062)
107	780152	1	Bearing–Needle (Only On: 72042, 72062)
108	780150	1	Bearing–Needle (Only On: 72042, 72062)
109	792001	5	O Ring (Only On: 72042, 72062)
110	786142	2	Sleeve (Only On: 72042, 72062)
111	788071	2	Ring–Square Cut (Only On: 72042, 72062)
112	780168	2	Bearing–Needle (Only On: 72042, 72062)
113	786143	2	Sleeve (Only On: 72042, 72062)
114	780151	2	Bearing–Needle (Only On: 72042, 72062)
115	786145	2	Sleeve (Only On: 72042, 72062)
116	788070	4	Ring–Square Cut (Only On: 72042, 72062)
117	780031	2	Bearing–Needle (Only On: 72042, 72062)
150	510334	1	Gasket Loctite #515 (Only On: 72042, 72062)
200	786122	1	Spacer .276–.268 Thick (Only On: 72042, 72062)
201	792073	2	Screw 1/4–20x1 1/4 (Only On: 72042, 72062)
202	780107	2	Washer (Only On: 72042, 72062)
203	780042	4	Washer (Only On: 72042, 72062)
204	792145	1	Nut–Push (Only On: 72042, 72062)

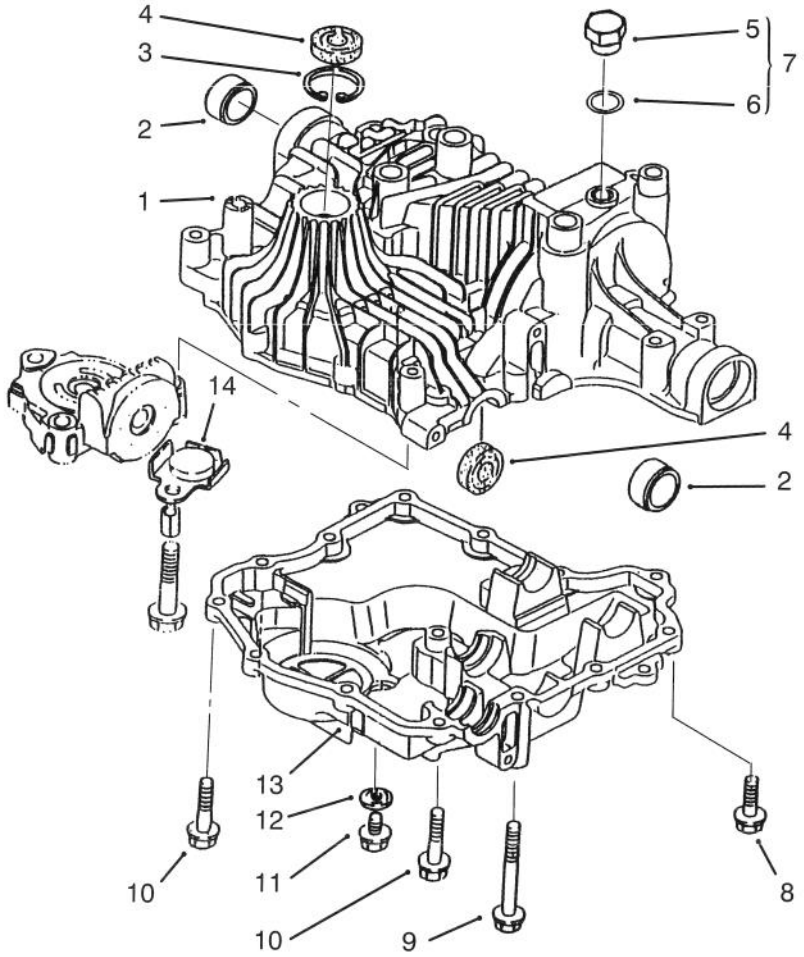

Sheet No.: 401

c–1860

Transaxle Case

Ref. No.	Part No.	Qty.	Description
1	93–0351	1	Upper Case ASM INC 2–6 (Only On: 72083, 72043, 72103, 72063)
†2		2	Bushing (Only On: 72083, 72043, 72103, 72063)
†3	93–0360	1	Ring (Only On: 72083, 72043, 72103, 72063)
†4	93–0361	2	Seal (Only On: 72083, 72043, 72103, 72063)
†5		1	Plug (Only On: 72083, 72043, 72103, 72063)
†6		1	Packing (Only On: 72083, 72043, 72103, 72063)
7	93–0356	1	Plug/Packing INC 5–6 (Only On: 72083, 72043, 72103, 72063)
8	93–0363	11	Screw–TAP (Only On: 72083, 72043, 72103, 72063)
9	93–0354	1	Bolt (Only On: 72083, 72043, 72103, 72063)
10	93–0364	2	Screw–TAP (Only On: 72083, 72043, 72103, 72063)
11	93–0362	1	Bolt (Only On: 72083, 72043, 72103, 72063)
13	93–0353	1	Case–Lower (Only On: 72083, 72043, 72103, 72063)
14	93–0355	1	Magnet (Only On: 72083, 72043, 72103, 72063)

† Included in a service kit or in an assembly

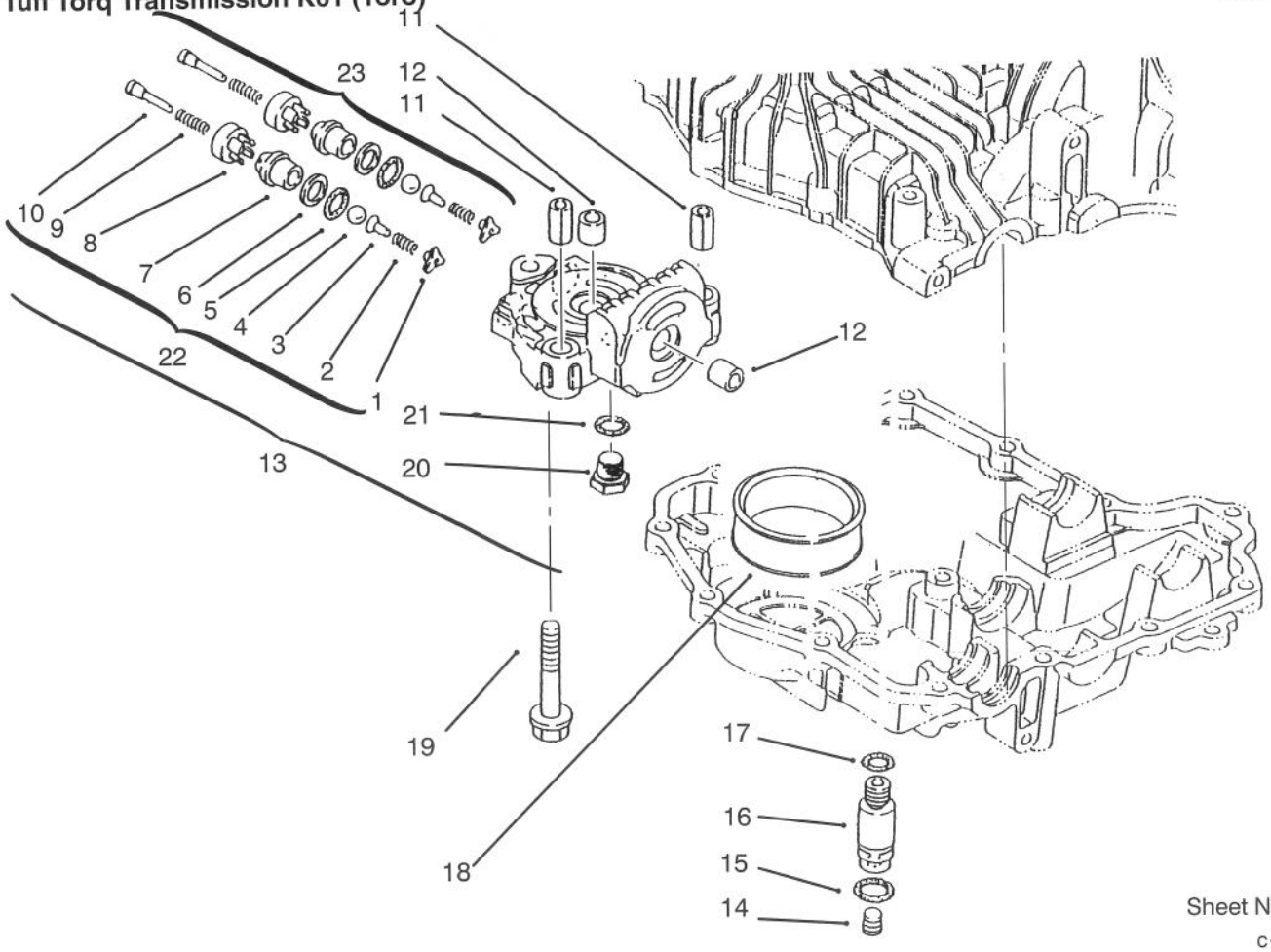

Sheet No.: 402
c–1877

Center Case

Ref. No.	Part No.	Qty.	Description
†1	93–0461	2	Holder–Bypass (Only On: 72083, 72043, 72103, 72063)
†2		2	Spring (Only On: 72083, 72043, 72103, 72063)
†3		2	Holder–Ball (Only On: 72083, 72043, 72103, 72063)
†4		1	Ball (Only On: 72083, 72043, 72103, 72063)
†5	93–0465	2	Packing (Only On: 72083, 72043, 72103, 72063)
†6	93–0466	2	Ring–Back Up (Only On: 72083, 72043, 72103, 72063)
†7		1	Sleeve A1 (Only On: 72083, 72043, 72103, 72063)
†8		2	Valve B (Only On: 72083, 72043, 72103, 72063)
†9		2	Spring (Only On: 72083, 72043, 72103, 72063)
†10		2	Pin–Push (Only On: 72083, 72043, 72103, 72063)
†11	93–0471	2	Pin–Knock (Only On: 72083, 72043, 72103, 72063)
†12	93–0472	2	Bushing (Only On: 72083, 72043, 72103, 72063)
13	93–0484	1	Case INC 11–12 & 20–23 (Only On: 72083, 72043, 72103, 72063)
14	93–0474	1	Plug (Only On: 72083, 72043, 72103, 72063)
15	93–0475	1	Packing (Only On: 72083, 72043, 72103, 72063)
16	93–0476	1	Connector (Only On: 72083, 72043, 72103, 72063)
17	93–0481	1	Packing (Only On: 72083, 72043, 72103, 72063)
18	93–0478	1	Filter (Only On: 72083, 72043, 72103, 72063)
19	93–0479	3	Bolt (Only On: 72083, 72043, 72103, 72063)
20	93–0480	1	Plug (Only On: 72083, 72043, 72103, 72063)
21	93–0481	1	Packing (Only On: 72083, 72043, 72103, 72063)
22	93–0482	1	Valve ASM A1 INC 1–10 (Only On: 72083, 72043, 72103, 72063)
23	93–0483	1	Valve ASM A2 (Only On: 72083, 72043, 72103, 72063)

† Included in a service kit or in an assembly

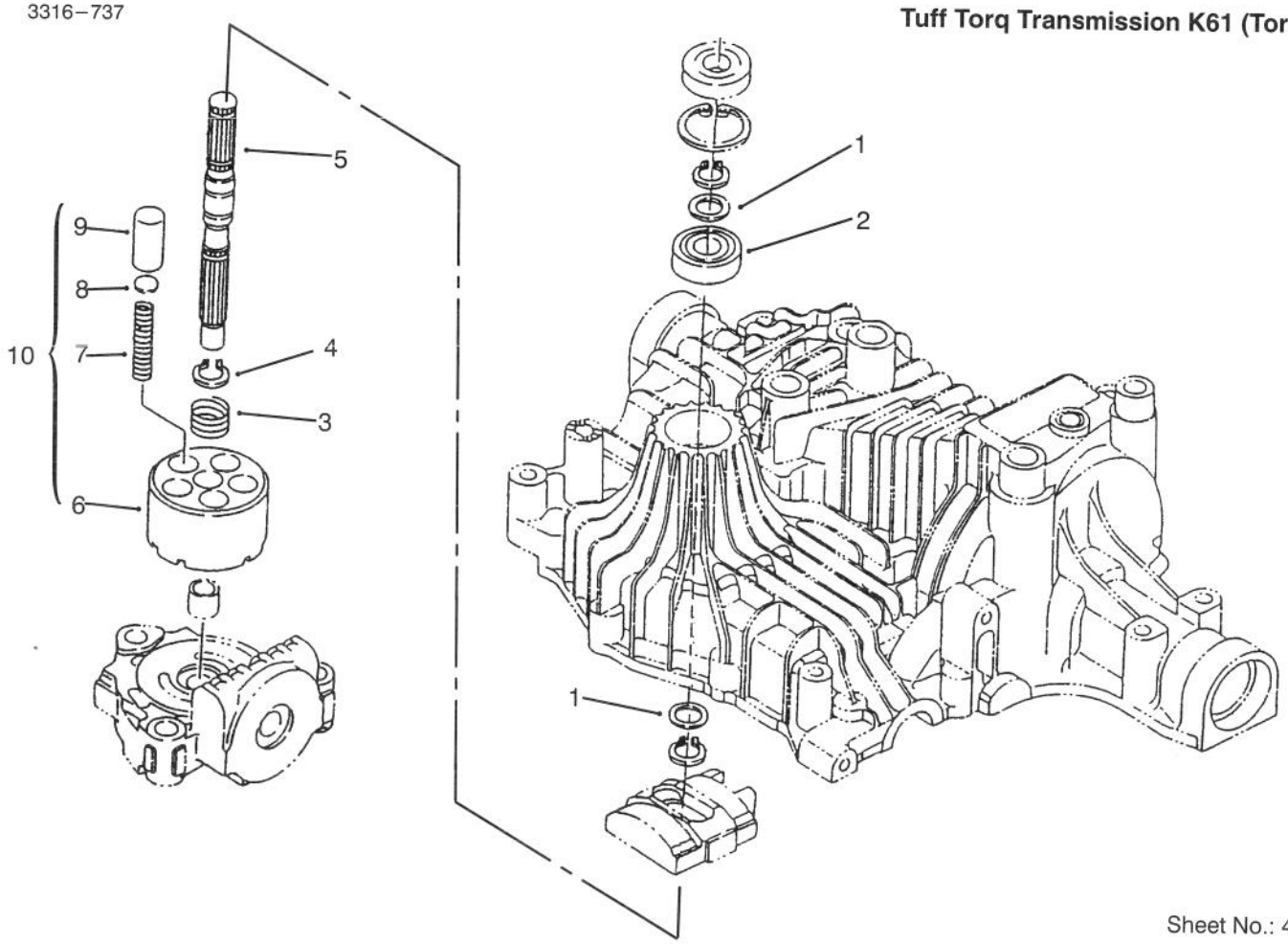

Sheet No.: 403
C–1861

Pump Shaft

Ref. No.	Part No.	Qty.	Description
1	93–0371	2	Washer (Only On: 72083, 72043, 72103, 72063)
2	93–0374	1	Bearing–Ball (Only On: 72083, 72043, 72103, 72063)
3	93–0370	1	Spring (Only On: 72083, 72043, 72103, 72063)
4	93–0373	3	Ring–Snap (Only On: 72083, 72043, 72103, 72063)
5	93–0372	1	Shaft–Pump (Only On: 72083, 72043, 72103, 72063)
†6		1	Block–Cylinder (Only On: 72083, 72043, 72103, 72063)
†7		5	Spring (Only On: 72083, 72043, 72103, 72063)
†8		5	Washer (Only On: 72083, 72043, 72103, 72063)
†9		5	Piston (Only On: 72083, 72043, 72103, 72063)
10	93–0365	1	Cylinder ASM INC 6–9 (Only On: 72083, 72043, 72103, 72063)

† Included in a service kit or in an assembly

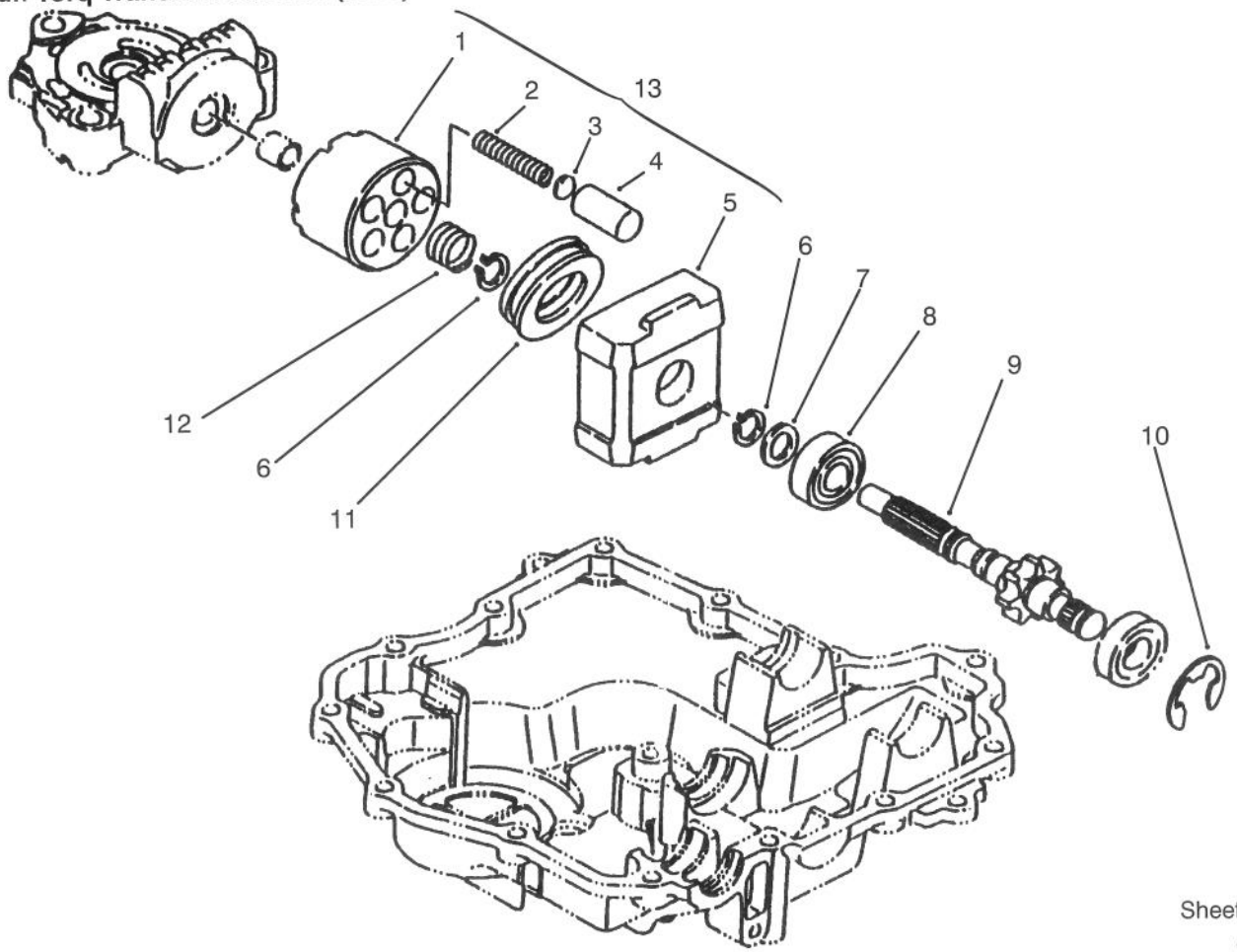

Sheet No.: 404
c–1862

Motor Shaft

Ref. No.	Part No.	Qty.	Description
1		1	Block–Cylinder (Only On: 72083, 72043, 72103, 72063)
2		1	Spring (Only On: 72083, 72043, 72103, 72063)
3		5	Washer (Only On: 72083, 72043, 72103, 72063)
4		5	Piston (Only On: 72083, 72043, 72103, 72063)
5	93–0375	1	Housing (Only On: 72083, 72043, 72103, 72063)
6	93–0373	2	Ring–Snap (Only On: 72083, 72043, 72103, 72063)
7	93–0371	1	Washer (Only On: 72083, 72043, 72103, 72063)
8	93–0374	1	Bearing–Ball (Only On: 72083, 72043, 72103, 72063)
9	93–0386	1	Shaft–Motor (Only On: 72083, 72043, 72103, 72063)
10	93–0387	1	E Ring (Only On: 72083, 72043, 72103, 72063)
11	93–0376	1	Bearing–Thrust (Only On: 72083, 72043, 72103, 72063)
12		1	Spring (Only On: 72083, 72043, 72103, 72063)
13	93–0365	1	Cylinder ASM INC 6–9 (Only On: 72083, 72043, 72103, 72063)

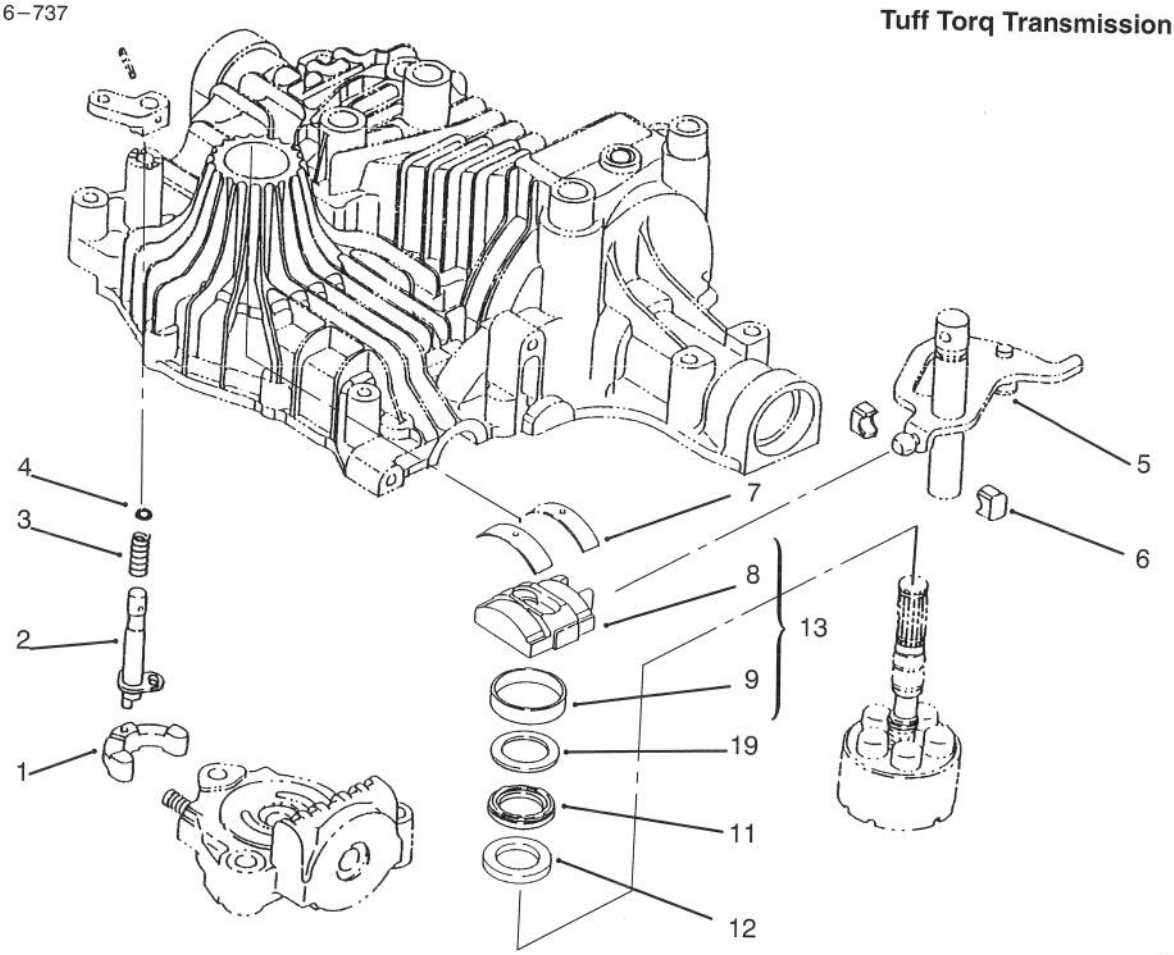

Sheet No.: 405

c–1863

Range Shift

Ref. No.	Part No.	Qty.	Description
1	93–0395	1	Arm (Only On: 72083, 72043, 72103, 72063)
2	93–0397	1	Shaft–Bypass (Only On: 72083, 72043, 72103, 72063)
3	93–0396	1	Spring (Only On: 72083, 72043, 72103, 72063)
4	93–0400	1	Packing (Only On: 72083, 72043, 72103, 72063)
5	93–0398	1	Block Set INC 6 (Only On: 72083, 72043, 72103, 72063)
†6		1	Block–Shift (Only On: 72083, 72043, 72103, 72063)
7	93–0388	2	Thrust Metal (Only On: 72083, 72043, 72103, 72063)
†8		1	Plate–Swash (Only On: 72083, 72043, 72103, 72063)
†9		1	Bushing–Swashplate (Only On: 72083, 72043, 72103, 72063)
10	93–0394	1	Plate–Thrust (Only On: 72083, 72043, 72103, 72063)
11	93–0392	1	Bearing (Only On: 72083, 72043, 72103, 72063)
12	93–0393	1	Plate–Thrust (Only On: 72083, 72043, 72103, 72063)
13	93–0389	1	Swash Plate INC 8–9 (Only On: 72083, 72043, 72103, 72063)

† Included in a service kit or in an assembly

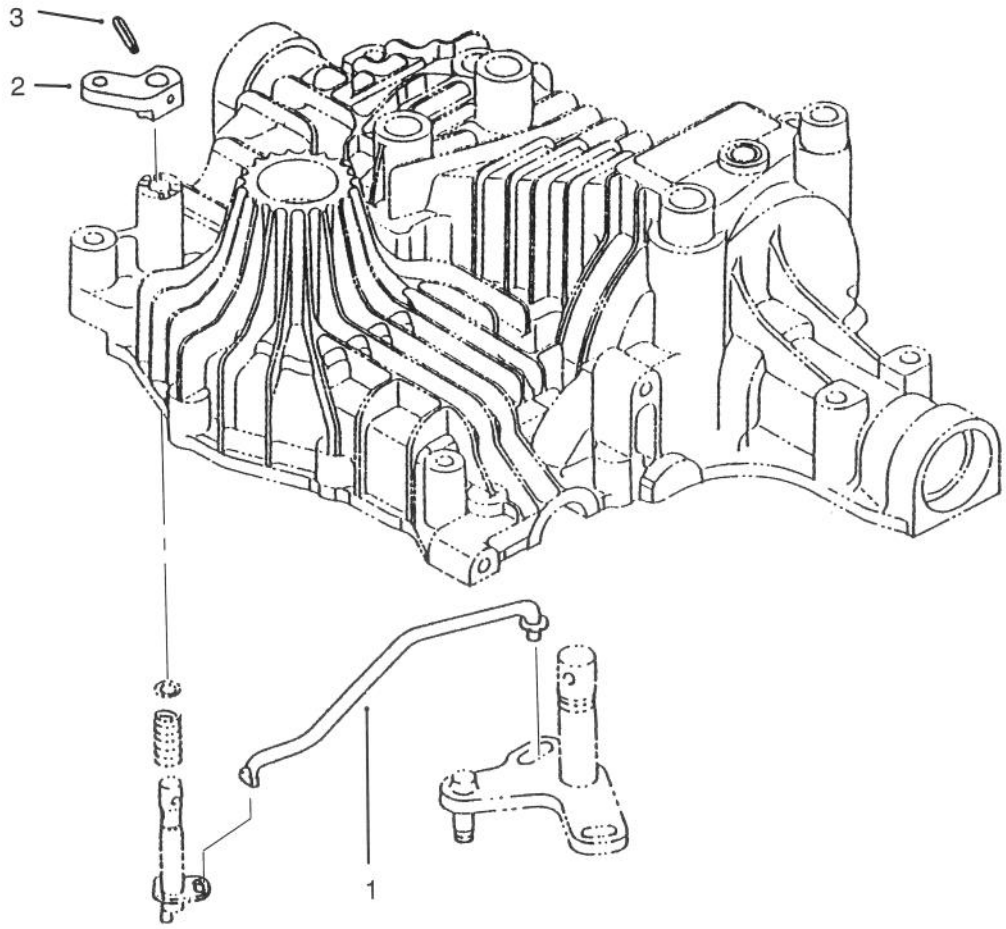

Sheet No.: 406

c–1864

Bypass Return

Ref. No.	Part No.	Qty.	Description
1	93–0401	1	Rod–Bypass (Only On: 72083, 72043, 72103, 72063)
2	93–0402	1	Arm–Valve Release (Only On: 72083, 72043, 72103, 72063)
3	93–0403	1	Pin–Roll (Only On: 72083, 72043, 72103, 72063)

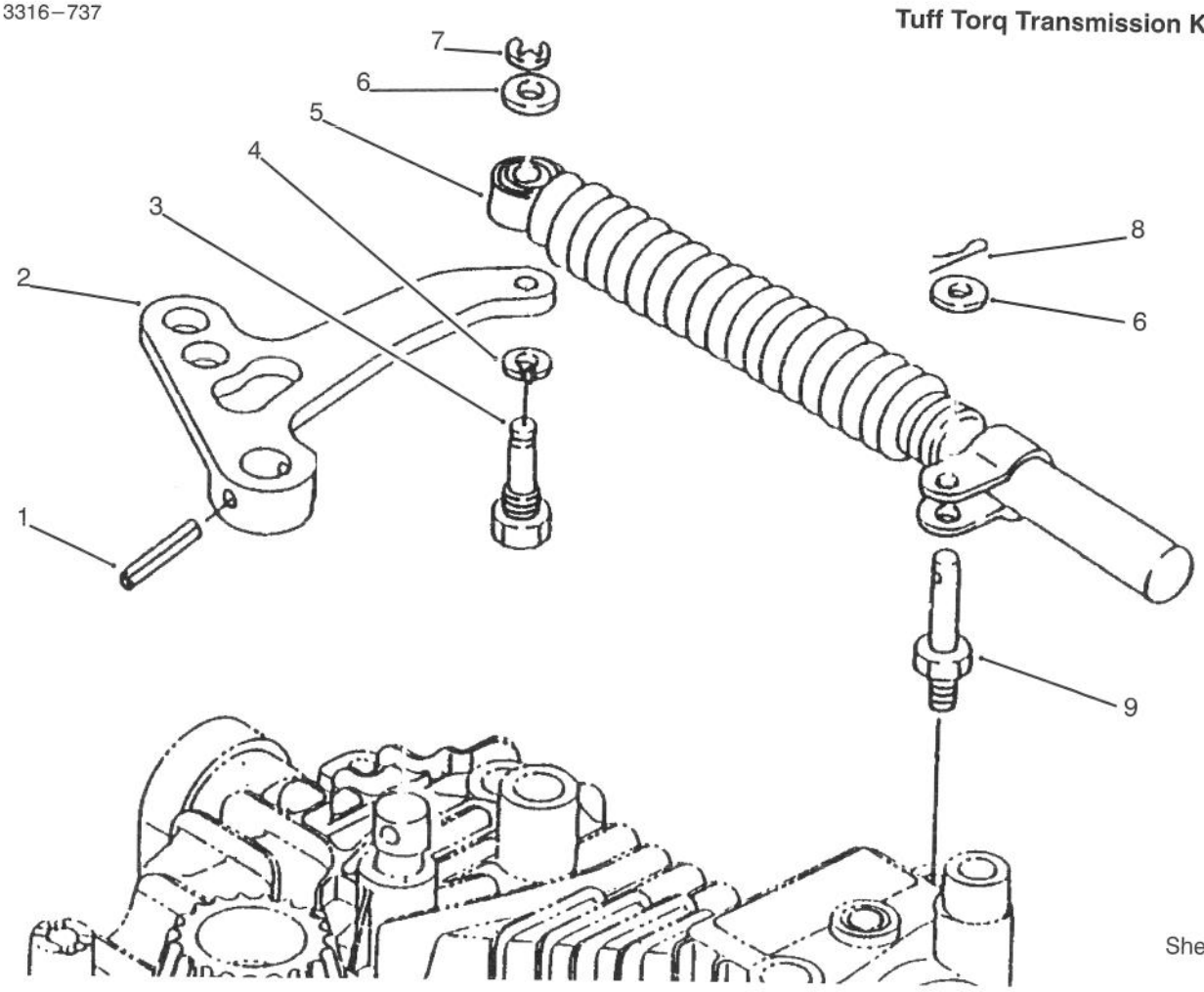

Sheet No.: 407
C–1865

Lever Damper

Ref. No.	Part No.	Qty.	Description
1	93–0411	1	Pin–Roll (Only On: 72083, 72043, 72103, 72063)
2	93–0404	1	Arm (Only On: 72083, 72043, 72103, 72063)
3	93–0407	1	Bolt (Only On: 72083, 72043, 72103, 72063)
4	93–0409	1	Washer (Only On: 72083, 72043, 72103, 72063)
5	93–0405	1	Shock Absorber (Only On: 72083, 72043, 72103, 72063)
6	93–0408	2	Washer (Only On: 72083, 72043, 72103, 72063)
7	93–0410	1	Ring (Only On: 72083, 72043, 72103, 72063)
8	93–0412	1	Pin–Cotter (Only On: 72083, 72043, 72103, 72063)
9	93–0406	1	Stud (Only On: 72083, 72043, 72103, 72063)

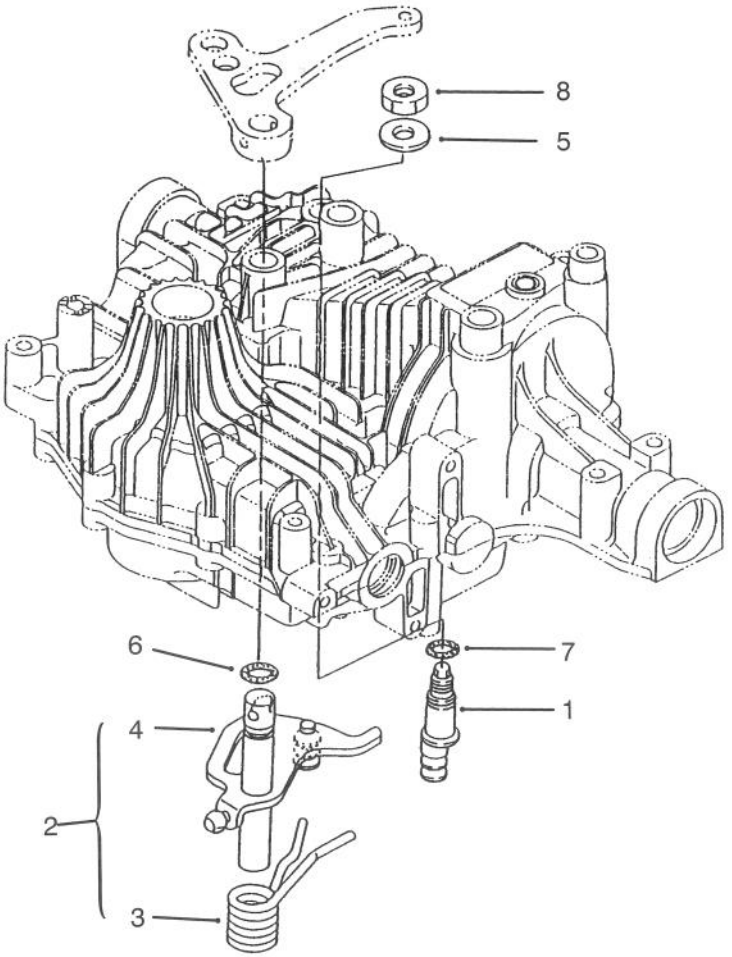

Sheet No.: 408

C–1866

N-Centering

Ref. No.	Part No.	Qty.	Description
1	93–0413	1	Fulcrum (Only On: 72083, 72043, 72103, 72063)
2	93–0414	1	Shaft ASM INC 3–4 (Only On: 72083, 72043, 72103, 72063)
†3		1	Spring (Only On: 72083, 72043, 72103, 72063)
†4		1	Shaft–Control (Only On: 72083, 72043, 72103, 72063)
5	93–0417	1	Washer (Only On: 72083, 72043, 72103, 72063)
6	93–0418	1	Packing (Only On: 72083, 72043, 72103, 72063)
7	93–0419	1	Packing (Only On: 72083, 72043, 72103, 72063)
8	93–0420	1	Nut (Only On: 72083, 72043, 72103, 72063)

† Included in a service kit or in an assembly

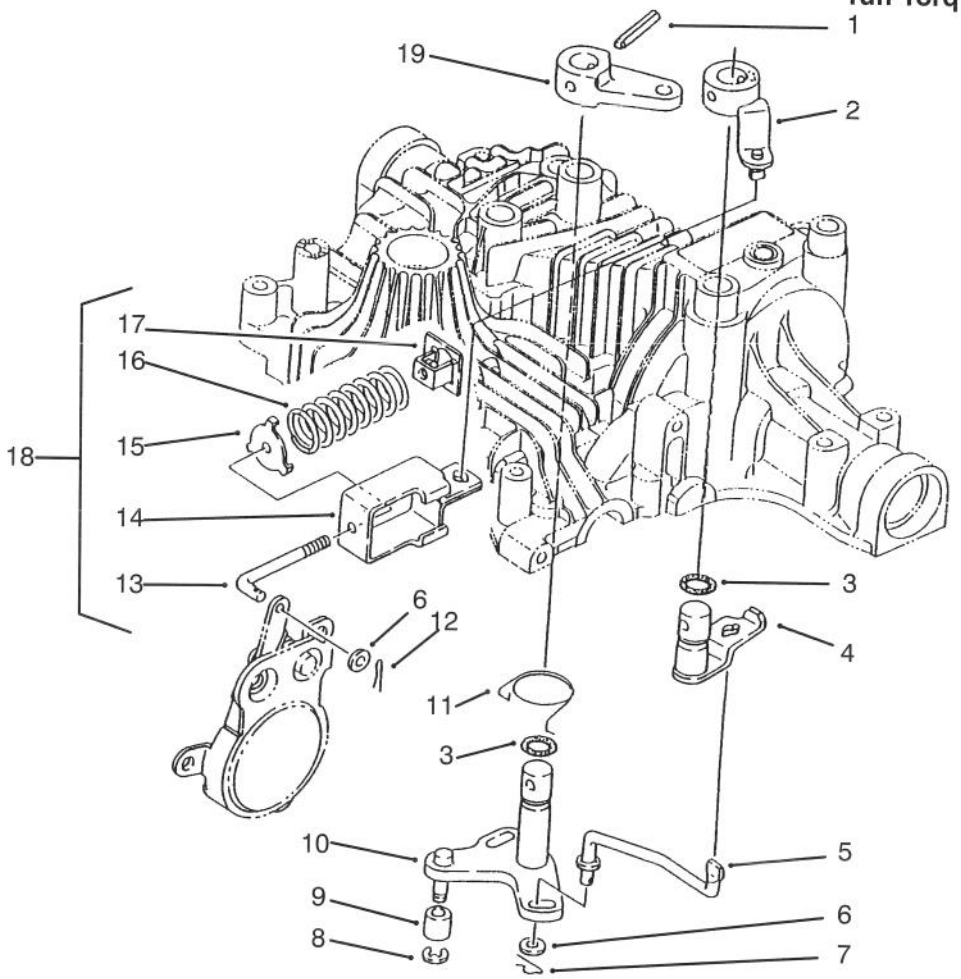

Sheet No.: 409

C–1867

Brake Interlock

Ref. No.	Part No.	Qty.	Description
1	93–0411	2	Pin–Roll (Only On: 72083, 72043, 72103, 72063)
2	93–0433	1	Arm–Brake B (Only On: 72083, 72043, 72103, 72063)
3	93–0418	2	Packing (Only On: 72083, 72043, 72103, 72063)
4	93–0432	1	Arm–Brake A (Only On: 72083, 72043, 72103, 72063)
5	93–0431	1	Rod–Brake (Only On: 72083, 72043, 72103, 72063)
6	93–0435	2	Washer (Only On: 72083, 72043, 72103, 72063)
7	93–0434	1	Pin–Snap (Only On: 72083, 72043, 72103, 72063)
8	93–0410	1	Ring (Only On: 72083, 72043, 72103, 72063)
9	93–0421	1	Bushing (Only On: 72083, 72043, 72103, 72063)
10	93–0430	1	Shaft–Brake (Only On: 72083, 72043, 72103, 72063)
11	93–0422	1	Return–Brake (Only On: 72083, 72043, 72103, 72063)
12	93–0412	1	Pin–Cotter (Only On: 72083, 72043, 72103, 72063)
†13	93–0428	1	Rod–Adjuster (Only On: 72083, 72043, 72103, 72063)
†14	93–0426	1	Holder–Spring (Only On: 72083, 72043, 72103, 72063)
†15	93–0425	1	Guide–Spring (Only On: 72083, 72043, 72103, 72063)
†16	93–0427	1	Spring (Only On: 72083, 72043, 72103, 72063)
†17	93–0424	1	Adjuster (Only On: 72083, 72043, 72103, 72063)
18	93–0423	1	Rod ASM INC 13–17 (Only On: 72083, 72043, 72103, 72063)
19	93–0429	1	Arm–Brake (Only On: 72083, 72043, 72103, 72063)

† Included in a service kit or in an assembly

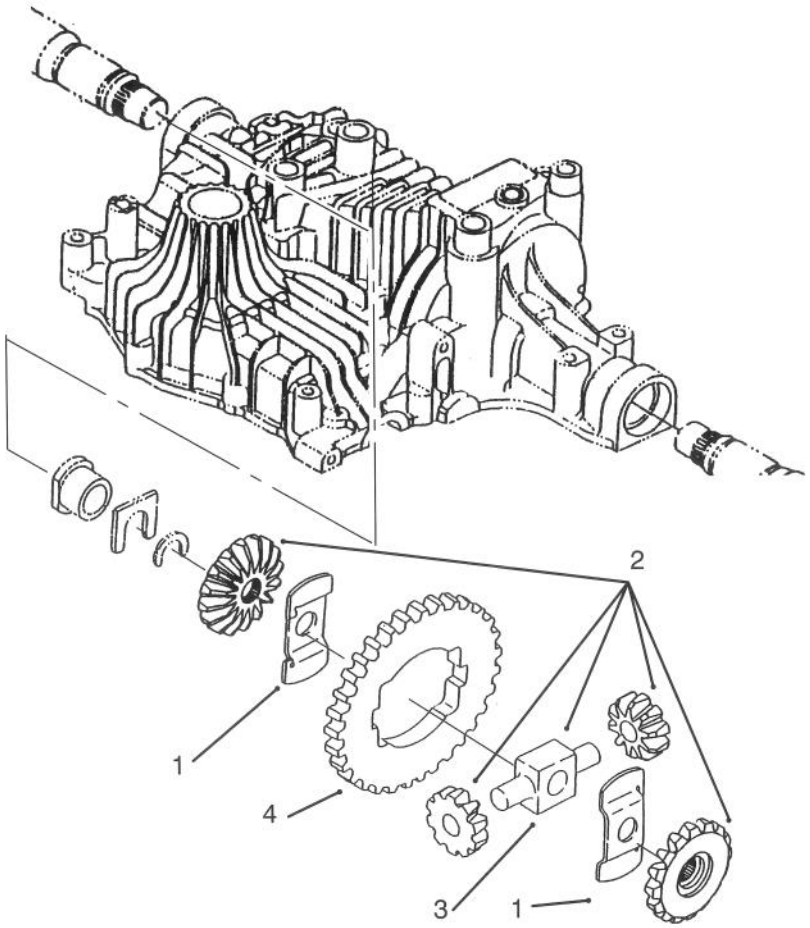

Sheet No.: 410

c–1868

Differential Gear

Ref. No.	Part No.	Qty.	Description
1	93–0444	2	Washer–Thrust (Only On: 72083, 72043, 72103, 72063)
2	93–0440	1	Differential Gear ASM (Only On: 72083, 72043, 72103, 72063)
3	93–0443	1	Shaft–Pinion (Only On: 72083, 72043, 72103, 72063)
4	93–0445	1	Gear–Final (Only On: 72083, 72043, 72103, 72063)

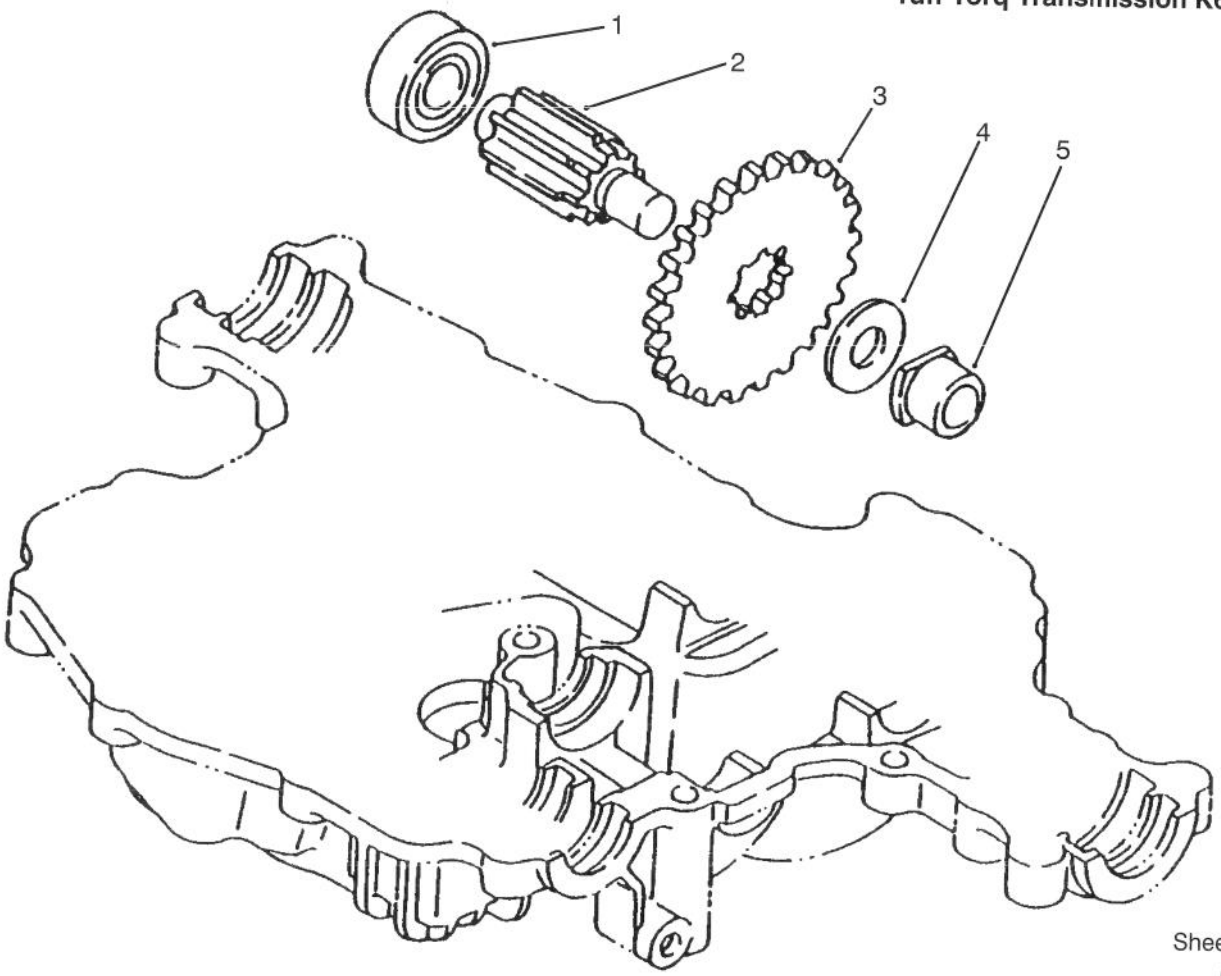

Sheet No.: 411
C–1869

Final Pinion

Ref. No.	Part No.	Qty.	Description
1	93–0446	1	Bearing (Only On: 72083, 72043, 72103, 72063)
2	93–0447	1	Shaft–Final Pinion (Only On: 72083, 72043, 72103, 72063)
3	93–0448	1	Gear–Final Shaft (Only On: 72083, 72043, 72103, 72063)
4	93–0449	1	Washer (Only On: 72083, 72043, 72103, 72063)
5	93–0450	1	Bushing (Only On: 72083, 72043, 72103, 72063)

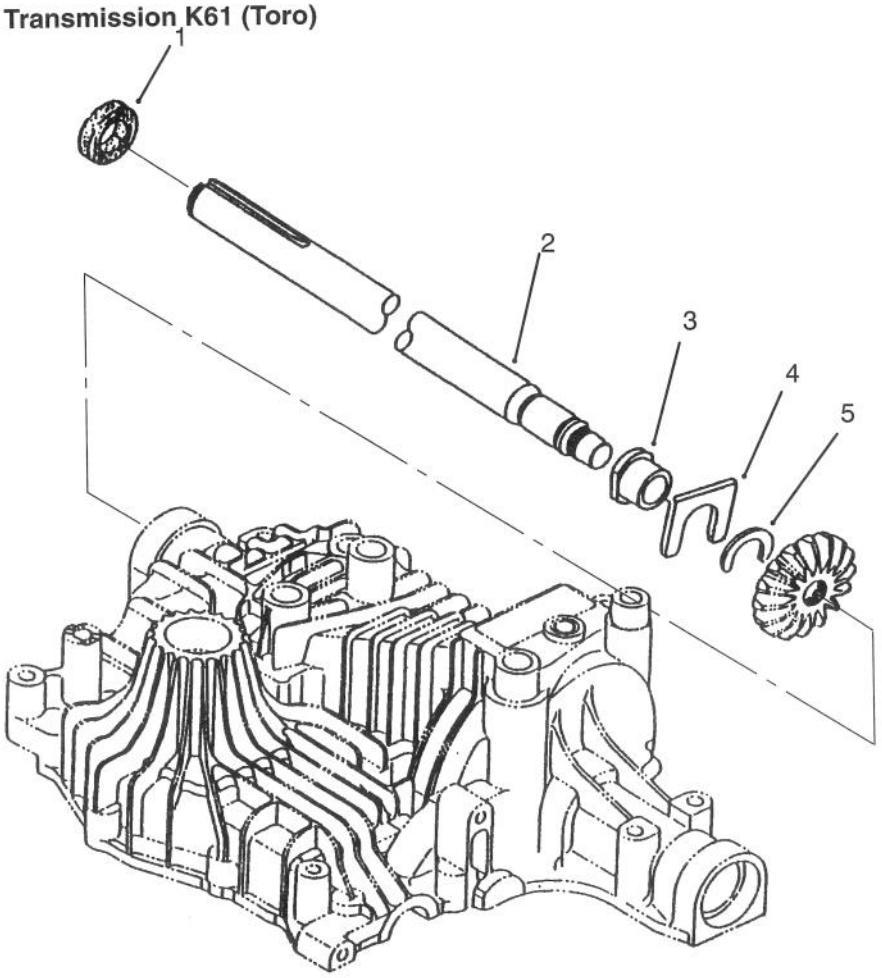

Sheet No.: 412

C–1870

Axle Shaft

Ref. No.	Part No.	Qty.	Description
1	93–0451	2	Seal (Only On: 72083, 72043, 72103, 72063)
2	93–0452	1	Shaft–Axle Right (Only On: 72083, 72043, 72103, 72063)
3	93–0454	2	Bushing (Only On: 72083, 72043, 72103, 72063)
4	93–0455	2	Wahser–Thrust (Only On: 72083, 72043, 72103, 72063)
5	93–0456	2	Ring (Only On: 72083, 72043, 72103, 72063)
*	93–0453	1	Shaft–Axle Left (Only On: 72083, 72043, 72103, 72063)

* Not illustrated

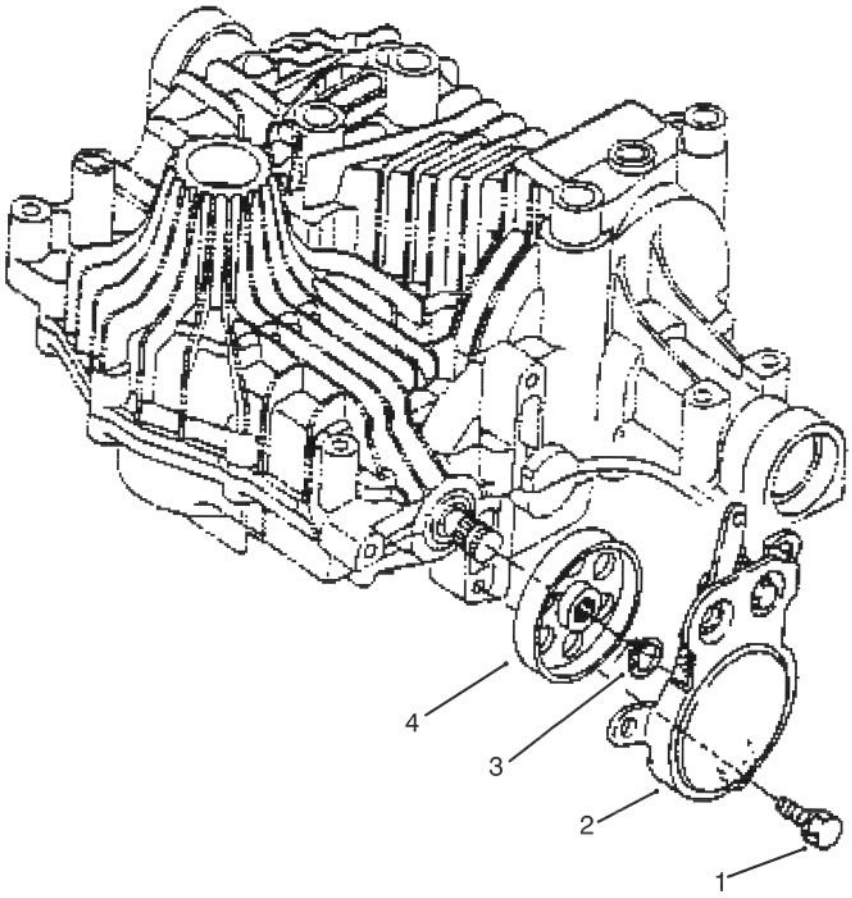

Sheet No.: 413
C–1871

Brake

Ref. No.	Part No.	Qty.	Description
1	93–0457	3	Bolt W/Washer (Only On: 72083, 72043, 72103, 72063)
2	93–0458	1	Band–Brake Interlock (Only On: 72083, 72043, 72103, 72063)
3	93–0373	1	Ring–Snap (Only On: 72083, 72043, 72103, 72063)
4	93–0460	1	Drum–Brake (Only On: 72083, 72043, 72103, 72063)

Electric Schematic Single Cylinder Hydro Drive

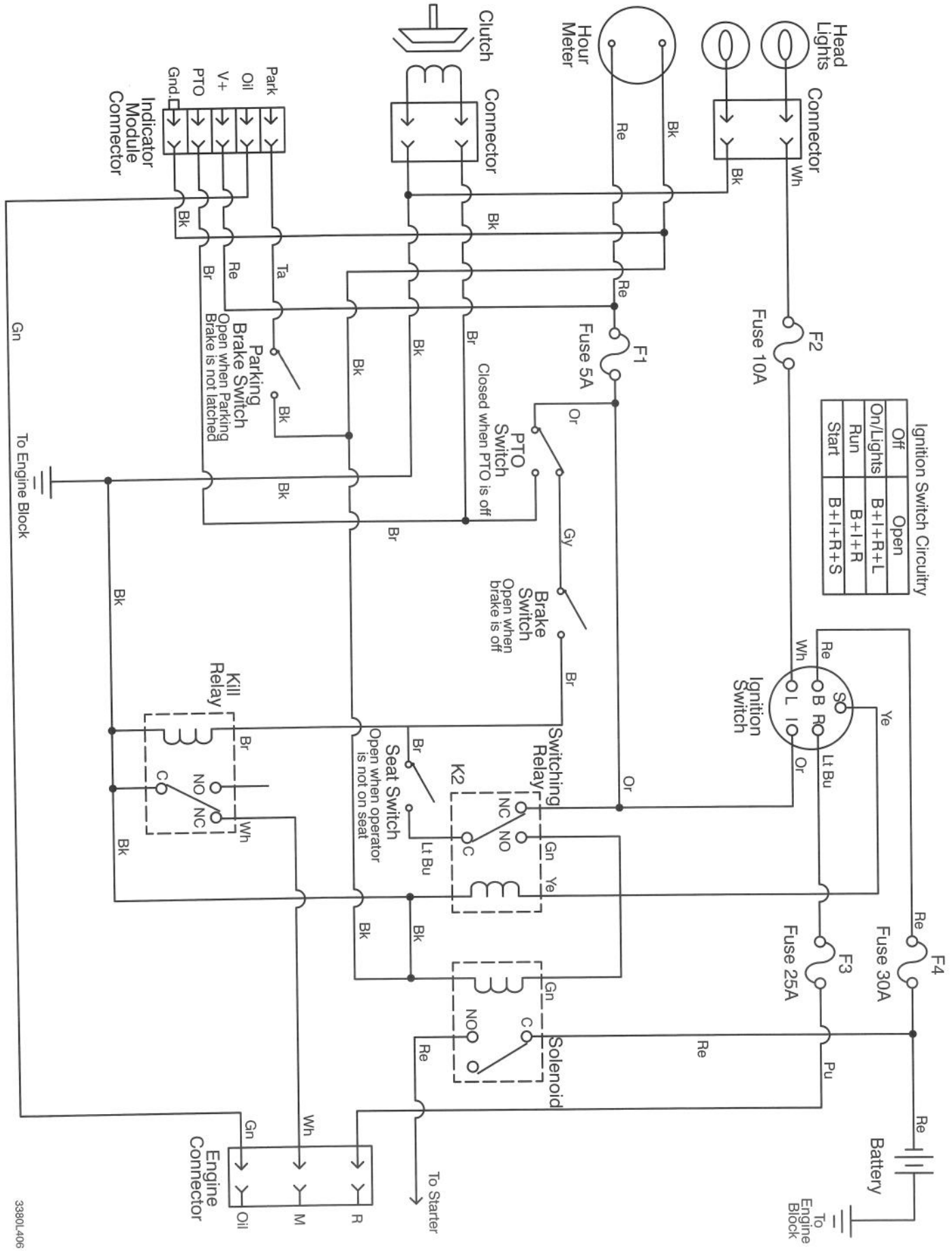

Electric Schematic Single Cylinder Gear Drive

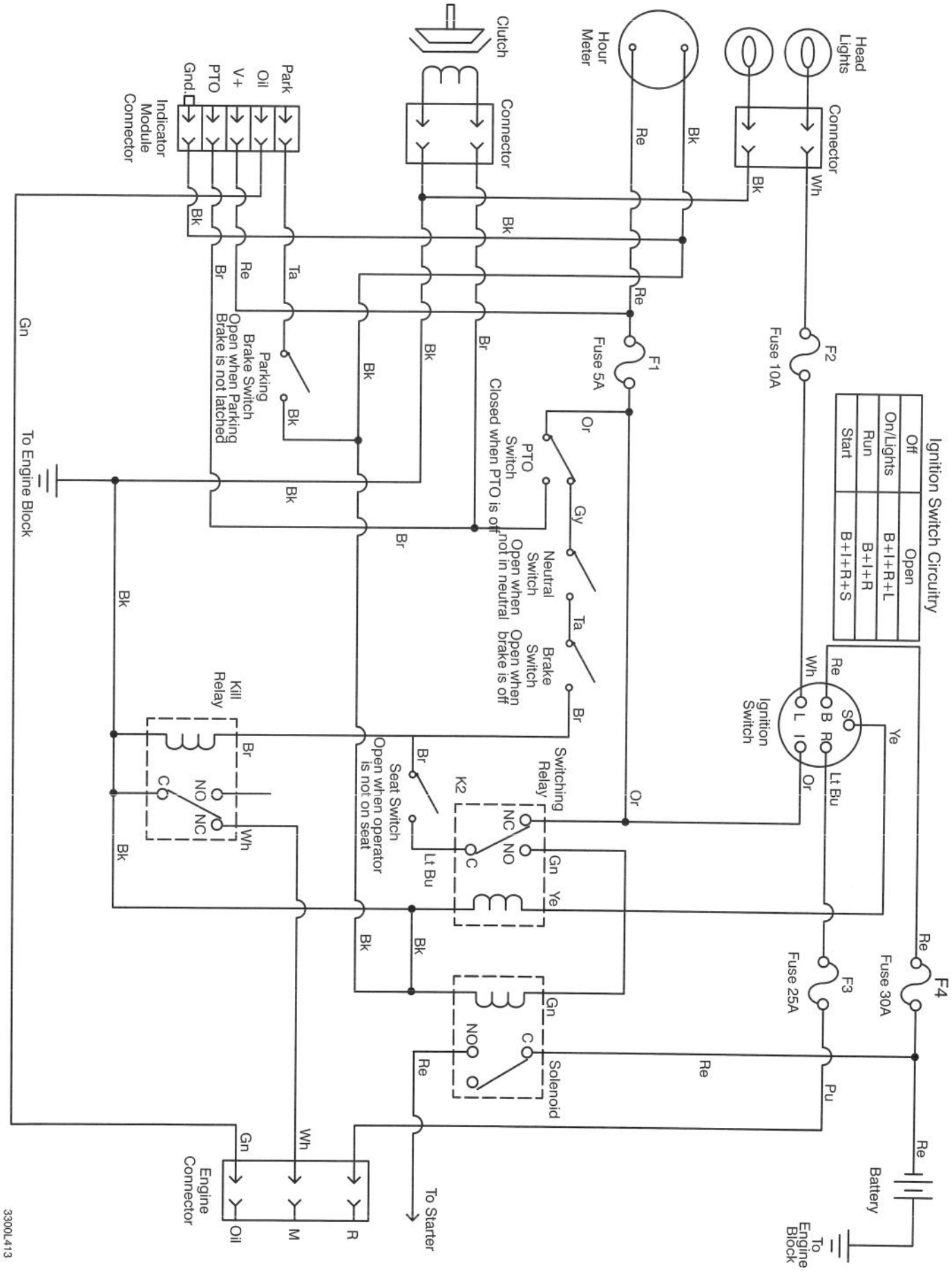

Electric Schematic Twin Cylinder Hydro Drive

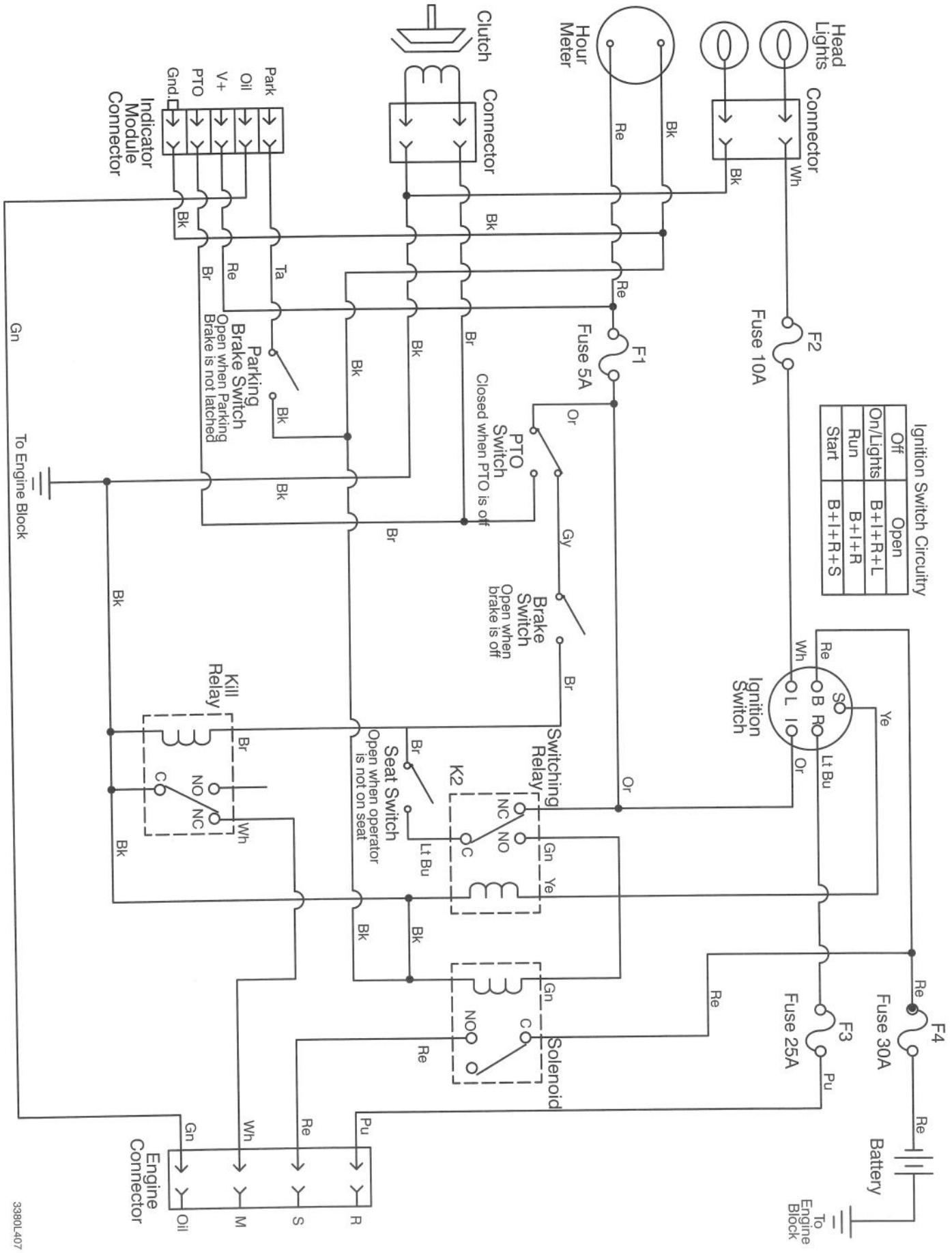

C–1946

Electric Schematic Twin Cylinder Gear Drive

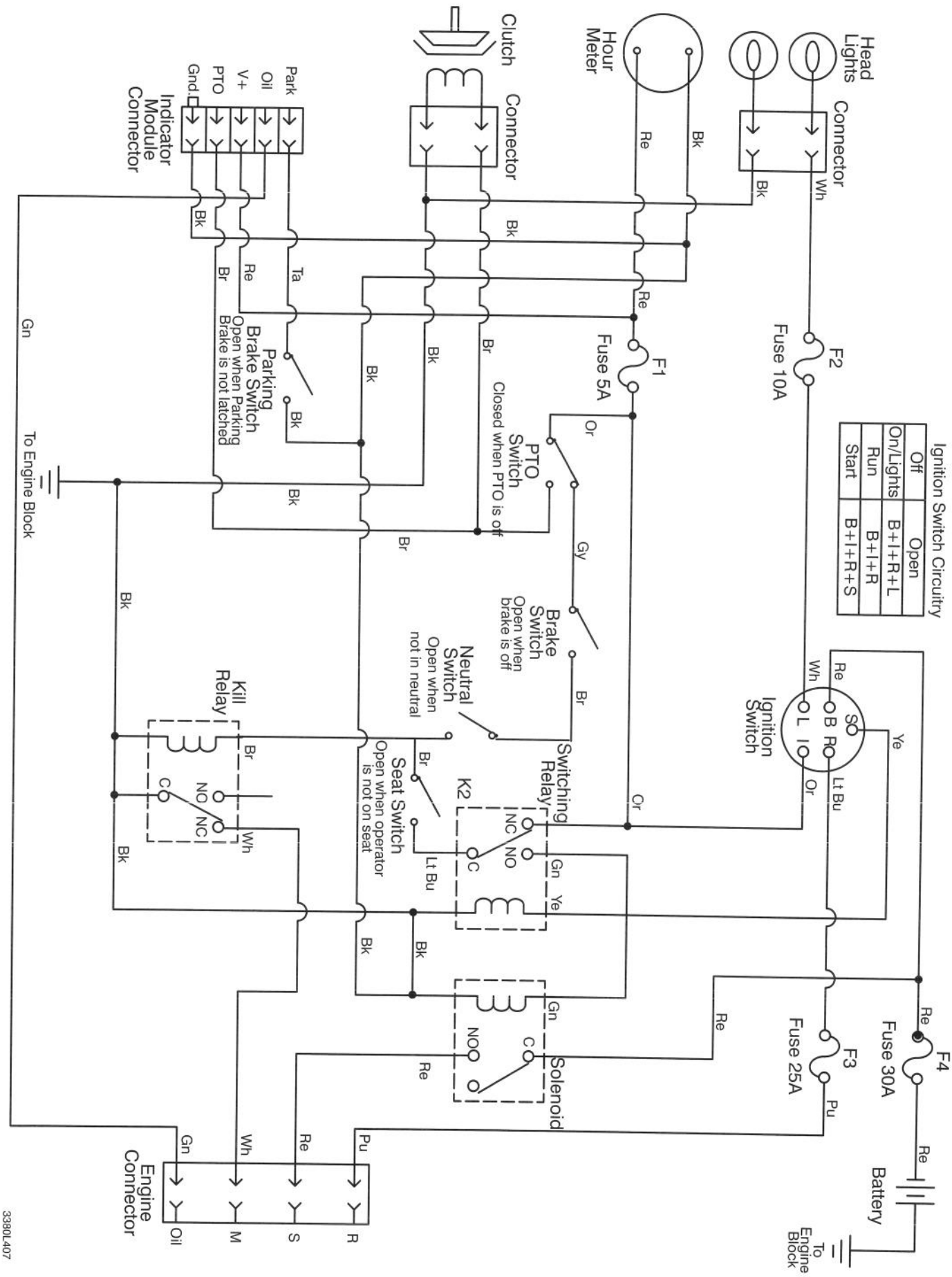

Wire Harness Routing — Twin Cylinder Engine

Sheet No.: 29

Wire Harness Routing — Single Cylinder Engine

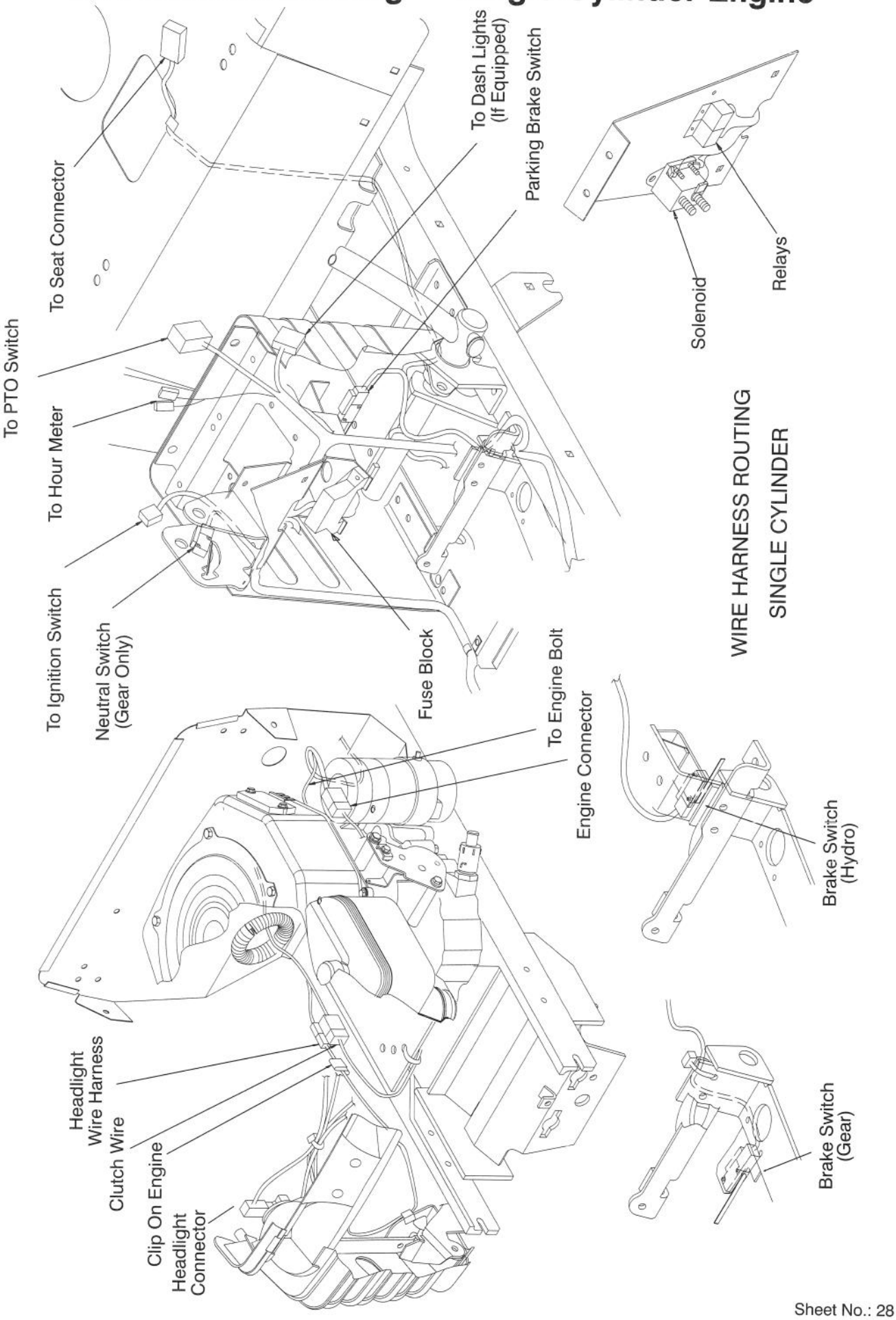

Sheet No.: 28

Toro Part Number Index

Part No.	Page No.	Ref. No.	Qty.	Description
1278	6	12	2	WASHER–SHIM
1278	7	3	8	WASHER–SHIM
1481	8	19	1	FITTING–GREASE 45 DEG
2534	20	32	1	CLIP–SPRING
2534	18	6	2	CLIP–SPRING
3624	15	6	1	SPRING–COMPRESSION
3624	29	20	2	SPRING–COMPRESSION
5108	7	14:4	2	VALVE–TIRE TUBELESS
5108	32	1:2	2	VALVE–TIRE TUBELESS
5210	7	2	4	WASHER–SHIM
5618	7	1	1	E–RING
7896	5	4	1	WASHER–BOWED
8130	15	4	1	RETAINER–SPRING
8830	17	8	1	RETAINER–"J"
8830	24	9	1	RETAINER–"J"
8870	15	21	1	TRUNNION
104962	24	20	1	BATTERY
105503	1	12	2	BUSHING
105503	9	11	2	BUSHING
106269	16	36	1	BEARING–FLANGE
106288	12	29	2	CLAMP
106557	9	14	2	REFLECTER
106948	24	10	1	TRAY–BATTERY
107788	19	17	1	SPRING–EXTENSION
108881	6	5	1	NUT–HEX
109189	6	7	1	BEARING–FLANGE
109547	24	12	2	HOOK–BATTERY
109553	24	21	1	BOOT–BATTERY CABLE
109989	9	8	2	SPACER
110015	31	19	2	SPACER
110391	6	6	1	BEARING–WHEEL
110513	7	14:3	4	BEARING–WHEEL
110656	29	6	1	TRUNNION
111078	24	7	1	CABLE–BATTERY BLACK
111383	6	8	1	COLLAR W/SET SCREW
111418	6	3	1	BUSHING
111418	20	39	1	BUSHING
111418	18	18	1	BUSHING
111419	6	1	1	WASHER–BEARING
111419	20	35	1	WASHER–BEARING
111419	18	2	1	WASHER–BEARING
111646	6	9	1	GRIPRING
111712	31	21	2	WASHER–WAVE
112168	15	16	1	DECAL–LIFT
112843	22	15	1	WASHER–PTO
112843	21	12	1	WASHER–PTO
114064	23	4	2	BEARING–ELEC CLUTCH
114427	8	22	2	HUBCAP
114428	32	7	2	HUBCAP
114621	14	31	1	DECAL–NOISE
114720	24	13	1	TUBE–BATTERY DRN
115203	22	3	1	SCREW–HH
115230	29	1	1	SWITCH–CLUTCH
115593	15	11	1	KNOB
116397	4	26	2	RELAY
116744	32	1:3	2	TIRE
116971	32	1:3	2	TIRE
117127	7	14:1	2	TIRE
117316	24	2	1	ROD–BATTERY HOLD DOWN
120930	24	17:1	1	FUSE HOLDER
147665	15	3	2	SCREW
147665	19	23	2	SCREW

*Not Illustrated

Toro Part Number Index (cont.)

Part No.	Page No.	Ref. No.	Qty.	Description
147665	30	28	2	SCREW
147665	25	10	2	SCREW
607978	19	9	1	PULLEY–IDLER
614249	2	34	1	TIE STRAP
614249	14	32	2	TIE STRAP
614249	17	3	1	TIE STRAP
614249	20	34	1	TIE STRAP
700806	9	16	2	KNOB
700919	3	12	1	NUT
701178	9	9	2	CAP–PROTECTOR
702366	2	35	1	CLIP–WIRE RETAINER
702366	12	27	1	CLIP–WIRE RETAINER
702366	22	12	1	CLIP–WIRE RETAINER
702366	21	23	1	CLIP–WIRE RETAINER
909543	28	1	2	SCREW–SET
933141	15	12	1	PIN–SPIROL
933148	15	5	1	PIN–SPIROL
933270	8	21	2	PIN–ROLL
936118	27	13	2	SNAP RING
937225	28	3	1	KEY
9114466	21	13	1	SCREW HH
9150026	7	6	4	NUT–LOCK
9202154	26	12	1	WASHER–FLAT
9202324	7	4	2	WASHER–10 GA
9202634	16	35	1	WASHER–FLAT
9266934	11	17	2	SCREW–HWHTF
9266934	22	19	3	SCREW–HWHTF
9266934	21	2	3	SCREW–HWHTF
9267154	7	8	1	SCREW
5–1336	32	5	2	KEY
5–4460	9	18	2	WASHER–FENDER
7–5461	29	9	1	SPACER–TRANSMISSION
24–7924	13	15	2	COVER–DRIVE SHAFT
28–2480	7	16	2	WASHER–FLAT
38–1420	9	25	1	SWITCH–SEAT (BEAM)
46–8093	1	23	2	SCREW–TAP
46–8093	14	25	2	SCREW–TAP
47–2910	30	31	1	WASHER–THRUST
48–7730	5	20	2	SCREW–HH
48–7730	22	7	4	SCREW–HH
49–2040	27	16	3	SCREW–HH
61–9780	7	17	2	HUBCAP
62–7770	4	30	1	KEY–IGNITION
65–2920	25	22	1	PAD–PEDAL
66–0120	3	8	2	KNOB
76–1340	11	9	1	DECAL–USA
78–1221	32	1:1	2	WHEEL
78–1680	7	14:2	2	WHEEL
78–1940–01	7	11	1	ARM–FRONT SPINDLE RH
78–1950–01	8	20	1	ARM–FRONT SPINDLE LH
78–2140	16	33	1	TRUNNION
78–2431	15	25	1	ROD
78–2491–03	17	7	1	STOP–PTO
78–2601–01	7	13	2	SPINDLE
78–2610	6	2	1	GEAR–SECTOR
78–2920	7	5:2	1	JOINT–BALL
78–2920	7	7:2	1	JOINT–BALL
78–5801	7	5:3	1	JOINT–BALL RH W/ JAM NUT
78–5811	7	7:3	1	JOINT–BALL LH W/ JAM NUT
78–6771	19	16	1	ARM–IDLER
78–6810–03	16	29	1	PLATE
78–6820–03	24	11	1	PLATE–BATTERY

*Not Illustrated

Toro Part Number Index (cont.)

Part No.	Page No.	Ref. No.	Qty.	Description
78–7360	16	28	1	ROD
78–7390	15	24	1	LINK
78–7960–01	8	18	1	AXLE–FRONT
78–8180–03	31	15	1	PEDAL–CLUTCH
78–9150–03	6	4	1	PLATE
78–9740	15	10	1	DECAL–HOC KNOB
79–0390	19	14	1	GUIDE–BELT
79–0390	22	4	1	GUIDE–BELT
79–0400	19	20	1	GUIDE–BELT
79–0950–03	9	15	1	BRACKET–PIVOT RH
79–0970–03	9	12	1	BRACKET–PIVOT LH
79–1250	15	23	2	PIN
79–1790	19	30	1	GUIDE–BELT
79–3401–03	16	37	1	GAGE SHAFT
79–3500	10	3	1	RESERVOIR
79–6730	17	5	2	DECAL–BELT INSTALL
79–7020	17	5	2	DECAL–BELT INSTALL
79–7530	20	38	1	SPRING–EXTENSION
79–7530	18	15	1	SPRING–EXTENSION
83–2720	32	6	10	BOLT–LUG
83–6620	13	14	1	DECAL–INSTRUCTION
88–3850	5	6	1	STEERING WHEEL
88–3870	5	6:1	1	COVER–STEERING WHEEL
88–3950	9	1	1	SEAT
88–3970	1	22	1	REFLECTOR–LAMP
88–3980	10	5	1	GAS CAP ASM
88–4320	1	28	1	HARNESS–WIRE
88–4590	18	12	1	BOLT–SHOULDER
88–9930	15	2	1	SWITCH–MICRO
88–9930	19	24	1	SWITCH–MICRO
88–9930	25	9	1	SWITCH–MICRO
92–3014	23	1	3	NUT & SPRING ASM
92–3015	23	2	1	ROTOR ASM W/BEARING
92–3016	23	3	1	FIELD ASM W/BEARING
92–6506	10	6	1	TANK–GAS
92–6510	3	6	1	DASH
92–6511	9	1	1	SEAT
92–6656	1	19	1	LENS–HEADLIGHT
92–6657	5	6	1	STEERING WHEEL
92–6660–03	17	2	1	FRAME
92–6670	19	27	1	BRACKET–CLUTCH
92–6671	19	28	1	BRACKET–BRAKE
92–6674–03	17	1	1	SUPPORT–FENDER
92–6680	3	7	1	BOOT–STEERING
92–6686	27	11	1	PULLEY
92–6687	11	24	1	MAT–FOOT RH
92–6688	11	25	1	MAT–FOOT LH
92–6689	11	24	1	MAT–FOOT RH
92–6690	11	25	1	MAT–FOOT LH
92–6702	6	10	1	SHAFT–STEERING LOWER
92–6704	5	9	1	SHAFT–STEER UPPER
92–6705	3	21	1	LENS–DASH
92–6709	4	23	1	LIGHT–INDICATOR
92–6710	15	7	1	GRIP–HANDLE
92–6711	15	8	1	TIP–ROD
92–6713–03	11	15	1	COVER–REAR
92–6715	4	22	1	HOURMETER
92–6716	22	10	1	GASKET–EXHAUST
92–6717	5	18	1	U–JOINT–STEERING
92–6718	27	10	1	BELT–HYDRO
92–6719	28	11	1	BELT–GEAR
92–6720	3	15	1	DECAL–CHOKE/PTO

*Not Illustrated

Toro Part Number Index (cont.)

Part No.	Page No.	Ref. No.	Qty.	Description
92–6721	3	11	1	DECAL–THROTTLE/IGNITION
92–6722	3	10	1	DECAL–SHIFT
92–6725	11	4	1	DECAL–HOC
92–6726	27	19	1	DECAL–HYDRO VALVE
92–6727	11	14	1	DECAL–FUEL LEVEL
92–6728	1	25	1	DECAL–HOOD LH
92–6729	2	31	1	DECAL–HOOD RH
92–6730	11	13	1	DECAL–REAR FENDER
92–6732	4	23	1	HOUSING–INDICATOR LIGHT
92–6733	13	19	2	DECAL–264–6
92–6734	13	19	2	DECAL–264–H
92–6735	13	19	2	DECAL–266–H
92–6737	10	1	1	HOSE
92–6742	27	15	1	FAN
92–6744–01	11	1	1	FOOTREST–RH
92–6745–01	11	22	1	FOOTREST–LH
92–6746–01	11	22	1	FOOTREST–LH
92–6747–01	11	1	1	FOOTREST–RH
92–6750	9	2	2	SPACER–NYLON
92–6754	10	8	1	HOSE–FUEL LINE
92–6761	28	4	1	TRANSAXLE–PEERLESS 820
92–6762	27	2	1	TRANSAXLE–TUFF TORQ K61
92–6763	21	7	1	DECAL–TORO POWER PLUS 16
92–6764	22	1	1	DECAL–TORO POWER PLUS 14
92–6769	28	13	2	U–BOLT
92–6769	27	1	2	U–BOLT
92–6771–03	13	21	1	BAFFLE–REAR
92–6776	5	13	1	BRACKET–DETENT
92–6777–03	5	1	1	BRACKET–SUPPORT
92–6778–03	13	10	1	SUPPORT–COLUMN
92–6780	22	8	2	NUT–HHF
92–6780	21	4	4	NUT–HHF
92–6781	3	19	1	CONTROL–CHOKE
92–6782	3	17	1	CONTROL–THROTTLE
92–6783	3	19	1	CONTROL–CHOKE
92–6784	3	17	1	CONTROL–THROTTLE
92–6785	3	14	1	SWITCH INC 12 & 30
92–6787	3	13	1	SWITCH–PTO
92–6793–03	13	4	1	PANEL–SUPPORT DASH
92–6794	15	14	1	WEDGE–HOC ADJUST
92–6795–01	11	10	1	FENDER
92–6796	3	9	1	COVER–SLOT RH
92–6797	3	16	1	COVER–SLOT LH
92–6798	5	11	1	CAP–ROD
92–6855–03	16	27	1	ARM
92–6859–03	13	6	1	SUPPORT–DASH
92–6860	13	8	4	NUT–RETAINER
92–6861	21	3	1	MUFFLER
92–6862	22	9	1	MUFFLER
92–6867–03	22	18	1	SHIELD–MUFFLER
92–6867–03	21	16	1	SHIELD–MUFFLER
92–6868–03	17	12	1	BRACKET–IDLER
92–6874–03	15	15	1	LEVER–LIFT
92–6875	30	30	3	BEARING–SHIFT LINK
92–6876	11	2	4	NUT–RETAINER
92–6877	22	20	1	VALVE–OIL DRAIN
92–6877	21	19	1	VALVE–OIL DRAIN
92–6878–03	22	11	1	BAFFLE–MUFFLER
92–6879–03	21	1	1	BAFFLE–MUFFLER
92–6883	7	5	1	STEERING LINK RH
92–6884	7	7	1	STEERING LINK LH
92–6885	22	14	1	CLUTCH–PTO

*Not Illustrated

Toro Part Number Index (cont.)

Part No.	Page No.	Ref. No.	Qty.	Description
92–6885	21	11	1	CLUTCH–PTO
92–6886	29	10	1	ARM–SHIFT
92–6887	28	2	1	PULLEY
92–6888	22	13	1	PULLEY
92–6888	21	9	1	PULLEY
92–6889–03	28	5	1	STRAP–TORQUE LH
92–6890–03	28	9	1	STRAP–TORQUE RH
92–6891–03	19	6	1	BRACKET–IDLER SPRING
92–6893–03	16	40	1	BRACKET–PIVOT
92–6894–03	19	11	1	BRACKET–IDLER REAR
92–6895–03	30	34	1	BRACKET–PIVOT
92–6896	29	5	1	ROD–SHIFT TRANSAXLE
92–6899	27	9	2	STRAP–TORQUE
92–6900	18	14	1	ARM–IDLER
92–6902	26	23	1	PAD–PEDAL FORWARD
92–6903	26	1	1	PAD–PEDAL REVERSE
92–6904	24	17	1	HARNESS–WIRE
92–6905	24	17	1	HARNESS–WIRE
92–6907	24	17	1	HARNESS–WIRE
92–6913–03	26	2	1	PEDAL–HYDRO
92–6914–03	1	24	1	BAFFLE–HOOD UPPER
92–6917–03	2	30	1	BRACKET–HINGE RH
92–6918–03	1	7	1	BRACKET–HINGE LH
92–6919	29	25	1	PIVOT–SHIFT
92–6920	29	19	1	ROD–SHIFT
92–6921	29	21	1	BRACKET–SHAFT
92–6924	31	18	1	ROD–CLUTCH
92–6926–03	29	3	1	TUBE–LINKAGE
92–6929–03	31	9	1	BRACKET–PARKING BRAKE
92–6931	31	11	1	LEVER–PARKING BRAKE
92–6932–03	19	25	1	BRACKET–MICROSWITCH
92–6936–03	13	18	1	COVER–SIDE LH
92–6937–03	13	2	1	COVER–SIDE RH
92–6943	27	14	1	SPACER–FAN
92–6944	31	14	1	SPRING–EXTENSION
92–6945	28	10	1	SPRING–EXTENSION
92–6948–03	25	16	1	LEVER–BRAKE
92–6951–03	25	19	1	PEDAL–BRAKE
92–6960	14	27	2	LATCH–HOOD
92–6962	26	6	1	BUSHING
92–6964–03	17	14	1	BRACKET–HOC
92–6965	15	9	1	ROD–HOC
92–6966	26	22	1	SPACER–HYDRO PEDAL
92–6968	25	11	1	TRUNNION–BRAKE
92–6970	26	8	1	ROD–BYPASS
92–6971	5	5	1	LEVER–TILT
92–6972–03	9	4	1	SUPPORT–SEAT
92–6973	3	20	1	DECAL–DASH LENS
92–6975	3	20	1	DECAL–DASH LENS
92–6977–03	15	17	1	ROD–LIFT LEVER
92–6978	16	31	1	ROD–HOC INDICATOR
92–6979	16	34	1	PLATE–HOC GAGE
92–6982	25	20	1	SPACER–BRAKE
92–6984–03	25	7	1	BRACKET–BRAKE
92–6986	9	7	2	BOLT–SHOULDER
92–6987	1	20	1	DECAL–HORSEHEAD
92–6988	25	14	1	ROD–BRAKE
92–6989	4	31	1	CABLE–BATTERY RED
92–6989	24	1	1	CABLE–BATTERY RED
92–6990	24	1	1	CABLE–BATTERY RED
92–6992–03	17	4	1	BRACKET–STEERING
92–6995	25	21	1	SPRING–EXTENSION

*Not Illustrated

Toro Part Number Index (cont.)

Part No.	Page No.	Ref. No.	Qty.	Description
92–6996–03	2	32	1	HINGE–HOOD RH
92–6997–03	1	13	1	HINGE–HOOD LH
92–6998	5	22	1	SPACER–YOKE
92–6999	5	15	1	SPACER–YOKE
92–7000–03	25	3	1	BRACKET–PARK BRAKE
92–7001	19	4	1	GUIDE–BELT RH
92–7002	19	5	1	GUIDE–BELT LH
92–7004–03	25	5	1	SUPPORT–PARK BRAKE
92–7005	29	4	1	ROD
92–7006	1	4	4	NUT
92–7007	16	32	1	SPRING–EXTENSION
92–7008	26	20	2	ROD END
92–7009	31	26	1	GRIP–PARKING BRAKE
92–7009	25	1	1	GRIP–PARKING BRAKE
92–7018	26	3	1	ROD
92–7019	31	5	1	ROD–PARK BRAKE
92–7020	11	7	4	SCREW–TTH
92–7020	13	1	9	SCREW–TTH
92–7048–03	2	33	1	BRACKET–HOOD HINGE RH
92–7049–03	1	16	1	BRACKET–HOOD HINGE LH
92–7054	9	6	2	SPRING–COMPRESSION
92–7057–03	7	9	1	PIN–FRONT
92–7076	1	3	1	INLET–SEAL AIR
92–7077	1	3	1	INLET–SEAL AIR
92–7085	15	16	1	DECAL–LIFT
92–7086	3	15	1	DECAL–PTO/CHOKE
92–7087	3	11	1	DECAL–THROTTLE/IGNITION
92–7089	13	13	1	DECAL–SLOPE/PARK BRAKE
92–7090	27	19	1	DECAL–BYPASS
92–7091	13	13	1	DECAL–SLOPE/PARK BRAKE
92–7092	11	4	1	DECAL–HOC
92–7095	24	20	1	BATTERY (Only On: 72043, 72063)
92–7101	20	36	1	PULLEY–FLAT IDLER
92–7101	18	16	1	PULLEY–FLAT IDLER
92–7102	19	21	1	PULLEY–IDLER
92–7102	18	20	2	PULLEY–IDLER
92–7115–03	31	24	1	SPACER
92–7116	31	3	1	SPRING–COMPRESSION
92–7147	1	26	2	FOAM–HOOD
92–7148	1	27	2	FOAM–SIDEPANEL
92–7906	24	20	1	BATTERY (Only On: 72083, 72103)
92–8747	17	15	2	DECAL–ATTACH–A–MATIC
92–8946	11	6	1	DECAL–DANGER
92–9845	3	3	1	SOLENOID – 12 VOLT
93–0301	13	13	1	DECAL–SLOPE/PARK BRAKE
93–0302	13	13	1	DECAL–SLOPE/PARK BRAKE
93–0320	19	29	1	PULLEY–IDLER
93–0321	22	13	1	PULLEY–ENGINE
93–0324	24	7	1	CABLE–BATTERY BLACK
93–0350	21	5	2	GASKET–EXHAUST
93–0351	64	1	1	UPPER CASE ASM INC 2–6
93–0353	64	13	1	CASE–LOWER
93–0354	64	9	1	BOLT
93–0355	64	14	1	MAGNET
93–0356	64	7	1	PLUG/PACKING INC 5–6
93–0360	64	3	1	RING
93–0361	64	4	2	SEAL
93–0362	64	11	1	BOLT
93–0363	64	8	11	SCREW–TAP
93–0364	64	10	2	SCREW–TAP
93–0365	66	10	1	CYLINDER ASM INC 6–9
93–0365	67	13	1	CYLINDER ASM INC 6–9

*Not Illustrated

Toro Part Number Index (cont.)

Part No.	Page No.	Ref. No.	Qty.	Description
93–0370	66	3	1	SPRING
93–0371	66	1	2	WASHER
93–0371	67	7	1	WASHER
93–0372	66	5	1	SHAFT–PUMP
93–0373	66	4	3	RING–SNAP
93–0373	67	6	2	RING–SNAP
93–0373	76	3	1	RING–SNAP
93–0374	66	2	1	BEARING–BALL
93–0374	67	8	1	BEARING–BALL
93–0375	67	5	1	HOUSING
93–0376	67	11	1	BEARING–THRUST
93–0386	67	9	1	SHAFT–MOTOR
93–0387	67	10	1	E RING
93–0388	68	7	2	THRUST METAL
93–0389	68	13	1	SWASH PLATE INC 8–9
93–0392	68	11	1	BEARING
93–0393	68	12	1	PLATE–THRUST
93–0394	68	10	1	PLATE–THRUST
93–0395	68	1	1	ARM
93–0396	68	3	1	SPRING
93–0397	68	2	1	SHAFT–BYPASS
93–0398	68	5	1	BLOCK SET INC 6
93–0400	68	4	1	PACKING
93–0401	69	1	1	ROD–BYPASS
93–0402	69	2	1	ARM–VALVE RELEASE
93–0403	69	3	1	PIN–ROLL
93–0404	70	2	1	ARM
93–0405	70	5	1	SHOCK ABSORBER
93–0406	70	9	1	STUD
93–0407	70	3	1	BOLT
93–0408	70	6	2	WASHER
93–0409	70	4	1	WASHER
93–0410	70	7	1	RING
93–0410	72	8	1	RING
93–0411	70	1	1	PIN–ROLL
93–0411	72	1	2	PIN–ROLL
93–0412	70	8	1	PIN–COTTER
93–0412	72	12	1	PIN–COTTER
93–0413	71	1	1	FULCRUM
93–0414	71	2	1	SHAFT ASM INC 3–4
93–0417	71	5	1	WASHER
93–0418	71	6	1	PACKING
93–0418	72	3	2	PACKING
93–0419	71	7	1	PACKING
93–0420	71	8	1	NUT
93–0421	72	9	1	BUSHING
93–0422	72	11	1	RETURN–BRAKE
93–0423	72	18	1	ROD ASM INC 13–17
93–0424	72	17	1	ADJUSTER
93–0425	72	15	1	GUIDE–SPRING
93–0426	72	14	1	HOLDER–SPRING
93–0427	72	16	1	SPRING
93–0428	72	13	1	ROD–ADJUSTER
93–0429	72	19	1	ARM–BRAKE
93–0430	72	10	1	SHAFT–BRAKE
93–0431	72	5	1	ROD–BRAKE
93–0432	72	4	1	ARM–BRAKE A
93–0433	72	2	1	ARM–BRAKE B
93–0434	72	7	1	PIN–SNAP
93–0435	72	6	2	WASHER
93–0440	73	2	1	DIFFERENTIAL GEAR ASM
93–0443	73	3	1	SHAFT–PINION

*Not Illustrated

Toro Part Number Index (cont.)

Part No.	Page No.	Ref. No.	Qty.	Description
93–0444	73	1	2	WASHER–THRUST
93–0445	73	4	1	GEAR–FINAL
93–0446	74	1	1	BEARING
93–0447	74	2	1	SHAFT–FINAL PINION
93–0448	74	3	1	GEAR–FINAL SHAFT
93–0449	74	4	1	WASHER
93–0450	74	5	1	BUSHING
93–0451	75	1	2	SEAL
93–0452	75	2	1	SHAFT–AXLE RIGHT
93–0453	75		1	SHAFT–AXLE LEFT
93–0454	75	3	2	BUSHING
93–0455	75	4	2	WAHSER–THRUST
93–0456	75	5	2	RING
93–0457	76	1	3	BOLT W/WASHER
93–0458	76	2	1	BAND–BRAKE INTERLOCK
93–0460	76	4	1	DRUM–BRAKE
93–0461	65	1	2	HOLDER–BYPASS
93–0465	65	5	2	PACKING
93–0466	65	6	2	RING–BACK UP
93–0471	65	11	2	PIN–KNOCK
93–0472	65	12	2	BUSHING
93–0474	65	14	1	PLUG
93–0475	65	15	1	PACKING
93–0476	65	16	1	CONNECTOR
93–0478	65	18	1	FILTER
93–0479	65	19	3	BOLT
93–0480	65	20	1	PLUG
93–0481	65	17	1	PACKING
93–0481	65	21	1	PACKING
93–0482	65	22	1	VALVE ASM A1 INC 1–10
93–0483	65	23	1	VALVE ASM A2
93–0484	65	13	1	CASE INC 11–12 & 20–23
93–0485–03	13	17	1	HOODSTAND W/DECALS
93–0486–03	13	17	1	HOODSTAND W/DECALS
93–0487–03	13	17	1	HOODSTAND W/DECALS
93–0488–03	13	17	1	HOODSTAND W/DECALS
93–0489–01	11	5	1	PLATE–FOOTREST W/DECAL
93–0490	1	2	1	HOOD
93–0491	1	6	1	SIDEPANEL–LH HOOD
93–0492	2	29	1	SIDEPANEL–RH HOOD
93–0494	1	18	1	GRILLE & SCREEN ASM
93–0503–03	29	27	1	BRACKET–PIVOT MOUNT
93–1131	14	26	1	TRIM–SEAL
93–1144	10	9	2	SPACER–FUEL TANK
93–1146	5	3	1	BUSHING–STEERING
93–1148–03	5	12	1	COLUMN
93–1356	16	39	1	SHAFT
93–1357	5	14	1	SPRING–EXTENSION
93–1627	10	8	1	HOSE–FUEL LINE
93–3141	30	32	1	DECAL–REVERSE SHIFT
93–3144	30	32	1	DECAL–REVERSE SHIFT
93–3167	25	4	1	ROD–PARK BRAKE
93–3190	24	22	1	BOOT–TERMINAL INSULATOR
93–3228–03	31	1	1	PEDAL–BRAKE
93–3658–03	20	37	2	SPACER
93–3658–03	18	19	2	SPACER
93–3659–03	32	2	2	HUB–WHEEL
233–42	29	22	1	KNOB
237–141	3	5	1	GROMMET
2356–22	10	15	2	WASHER–FLAT
2412–34	10	2	2	CLAMP–HOSE
2412–98	10	7	2	CLAMP–HOSE

*Not Illustrated

Toro Part Number Index (cont.)

Part No.	Page No.	Ref. No.	Qty.	Description
256–90	16	26	2	BUSHING–FLANGE
256–90	25	18	2	BUSHING–FLANGE
256–219	29	26	2	BUSHING
283–62	31	25	2	PIN–CLEVIS
302–5	7	12	2	FITTING–GREASE
302–5	31	20	2	FITTING–GREASE
302–26	26	21	1	FITTING–GREASE
321–4	5	2	4	SCREW–HH
321–4	13	11	4	SCREW–HH
321–4	24	3	2	SCREW–HH
321–4	3	2	2	SCREW–HH
321–4	10	11	2	SCREW–HH
322–3	1	11	2	SCREW–HH
322–3	5	17	1	SCREW–HH
322–3	29	18	2	SCREW–HH
322–5	9	3	4	SCREW–HH
322–5	28	12	2	SCREW–HH
322–5	18	31	2	SCREW–HH
322–5	27	17	2	SCREW–HH
322–9	21	14	4	SCREW–HH
322–11	27	8	1	SCREW–HH
322–12	27	5	1	SCREW HH
322–17	5	23	1	SCREW–HH
323–2	29	12	1	SCREW–HH
323–7	26	17	1	SCREW
323–9	19	7	2	SCREW–HH
323–9	26	4	1	SCREW–HH
323–10	19	13	2	SCREW
323–10	18	1	3	SCREW
329–23	29	7	1	SCREW
3218–3	32	4	2	NUT–HJ
3229–11	13	5	4	BOLT–CARR
3230–1	1	21	2	SCREW–CARR
3230–2	9	17	4	SCREW–CARR
3230–2	11	8	8	SCREW–CARR
3230–2	17	11	2	SCREW–CARR
3230–20	12	28	4	BOLT–CARR
3230–23	11	3	2	SCREW–CARR
3231–4	6	11	1	BOLT–CARR
3231–22	22	16	2	BOLT–CARR
3231–22	21	15	2	BOLT–CARR
3231–25	19	3	1	SCREW–CARR
3243–5	32	3	2	SCREW–SET
3245–32	6	8:1	1	SCREW–SET
3245–32	27	12	1	SCREW–SET
3253–3	29	8	1	WASHER–LOCK
3253–4	5	19	2	WASHER–LOCK
3253–4	22	6	4	WASHER–LOCK
3253–4	27	4	4	WASHER–LOCK
3253–5	20	31	1	WASHER–LOCK
3253–5	26	18	1	WASHER–LOCK
3256–22	31	2	3	WASHER–FLAT
3256–22	10	13	2	WASHER–FLAT
3256–23	5	16	2	WASHER–FLAT
3256–23	11	16	6	WASHER–FLAT
3256–23	17	10	2	WASHER–FLAT
3256–23	20	40	2	WASHER–FLAT
3256–23	22	5	1	WASHER–FLAT
3256–23	28	8	6	WASHER–FLAT
3256–23	31	10	5	WASHER–FLAT
3256–23	18	27	2	WASHER–FLAT
3256–23	25	12	1	WASHER–FLAT

*Not Illustrated

Toro Part Number Index (cont.)

Part No.	Page No.	Ref. No.	Qty.	Description
3256–23	27	3	6	WASHER–FLAT
3256–24	19	8	6	WASHER–FLAT
3256–24	29	11	4	WASHER–FLAT
3256–24	22	21	2	WASHER–FLAT
3256–24	18	13	7	WASHER–FLAT
3256–24	25	15	1	WASHER–FLAT
3256–24	26	5	5	WASHER–FLAT
3256–24	21	25	2	WASHER–FLAT
3256–26	15	19	5	WASHER–FLAT
3256–28	5	10	1	WASHER–FLAT
3256–71	11	20	4	WASHER–FLAT
3272–2	31	4	2	PIN–COTTER
3272–2	26	7	1	PIN–COTTER
3272–6	15	20	1	PIN–COTTER
3272–6	29	15	2	PIN–COTTER
3272–6	31	7	2	PIN–COTTER
3272–6	25	13	2	PIN–COTTER
3272–10	31	22	2	PIN–COTTER
3272–16	26	15	1	PIN–COTTER
3272–17	7	15	2	PIN–COTTER
3290–282	9	5	4	POP RIVET
3290–307	30	29	2	PIN–COTTER
3290–354	15	1	1	NUT–SPEED
3290–354	19	26	1	NUT–SPEED
3290–354	29	2	1	NUT–SPEED
3290–354	25	8	1	NUT–SPEED
3290–413	29	14	1	WASHER–BELLEVILLE
3290–479	11	26	14	FASTENER–PANEL
3296–8	5	24	4	NUT–LOCK
3296–8	13	7	4	NUT–LOCK
3296–23	15	22	1	NUT–HH
3296–29	1	14	4	NUT–HEX LOCK
3296–29	5	21	2	NUT–HEX LOCK
3296–29	9	13	6	NUT–HEX LOCK
3296–29	11	19	14	NUT–HEX LOCK
3296–29	17	9	2	NUT–HEX LOCK
3296–29	28	7	6	NUT–HEX LOCK
3296–29	29	17	2	NUT–HEX LOCK
3296–29	18	10	3	NUT–HEX LOCK
3296–29	27	6	4	NUT–HEX LOCK
3296–29	21	8	4	NUT–HEX LOCK
3296–39	19	12	4	NUT–HEX LOCK
3296–39	22	17	2	NUT–HEX LOCK
3296–39	18	17	4	NUT–HEX LOCK
3296–39	26	10	1	NUT–HEX LOCK
3296–39	21	17	2	NUT–HEX LOCK
3296–42	13	12	3	NUT–HEX LOCK
3296–42	3	4	2	NUT–HEX LOCK
3296–42	10	4	2	NUT–HEX LOCK
3296–58	9	10	2	NUT–FLANGE
32103–22	14	24	4	NUT–WING
32103–22	24	4	4	NUT–WING
32104–96	10	10	2	SCREW–HHST
32104–118	4	24	3	SCREW–PH
32105–15	1	5	12	SCREW–HH
32120–47	15	18	5	RING–RETAINING
32121–4	29	13	1	PIN–ROLL
32121–69	25	17	1	PIN–SPRING
32121–97	29	24	1	PIN–ROLL
32121–111	5	8	1	PIN–SPIRAL
32128–10	1	9	8	NUT–LOCK HHF
32144–4	14	23	2	SCREW–TAP

*Not Illustrated

Toro Part Number Index (cont.)

Part No.	Page No.	Ref. No.	Qty.	Description
32144–4	15	13	1	SCREW–TAP
32144–4	10	10	2	SCREW–TAP
32144–4	19	22	2	SCREW–TAP
32144–4	29	23	2	SCREW–TAP
32144–8	4	25	2	SCREW–PPH
32144–8	5	25	2	SCREW–PPH
32144–14	1	8	2	SCREW–HH
32144–14	14	28	2	SCREW–HH
32144–14	16	30	2	SCREW–HH
32144–14	17	6	6	SCREW–HH
32144–14	24	19	1	SCREW–HH
32144–14	19	1	4	SCREW–HH
32144–14	16	41	2	SCREW–HH
32144–14	25	2	4	SCREW–HH
32144–32	1	1	2	SCREW–PLASTIC
32144–32	3	18	4	SCREW–PLASTIC
32144–70	16	41	2	SCREW–TAP
32144–70	19	2	3	SCREW–TAP
32144–70	28	6	4	SCREW–TAP
32144–118	21	24	2	SCREW–PPH
32149–2	13	3	2	NUT–HEX
32149–2	3	1	2	NUT–HEX

*Not Illustrated

PRODUCT CHANGES

In an effort to make improvements available to TORO owners as quickly as possible, minor changes are incorporated into Toro's products from time to time that do not become immediately shown in the Parts Catalog. If such a change has been made in your unit, which is not reflected in your manual, see your TORO Distributor or his Authorized TORO Service Dealer for information and part numbers.

COUNTRIES OTHER THAN THE UNITED STATES OR CANADA

Customers who have purchased TORO products exported from the United States or Canada should contact their Toro Distributor (Dealer) to obtain guarantee policies for your country, province or state. If for any reason you are dissatisfied with your Distributor's service or have difficulty obtaining guarantee information, contact the TORO importer. If all other remedies fail, you may contact us at The Toro Company.

MAINTENANCE RECORD

Date								

Compliance with Radio Interference Regulations Certified.
Certifie Conforme au Reglement sur le Brouillage Radioelectrique.

AL-941831

Litho in U.S.A.