FORM NO. 3316–757

TORO®

MODEL NO. 30137–490286 & UP

PARTS CATALOG

PROLINE 37"

RECYCLER® Rotary Cutting Unit

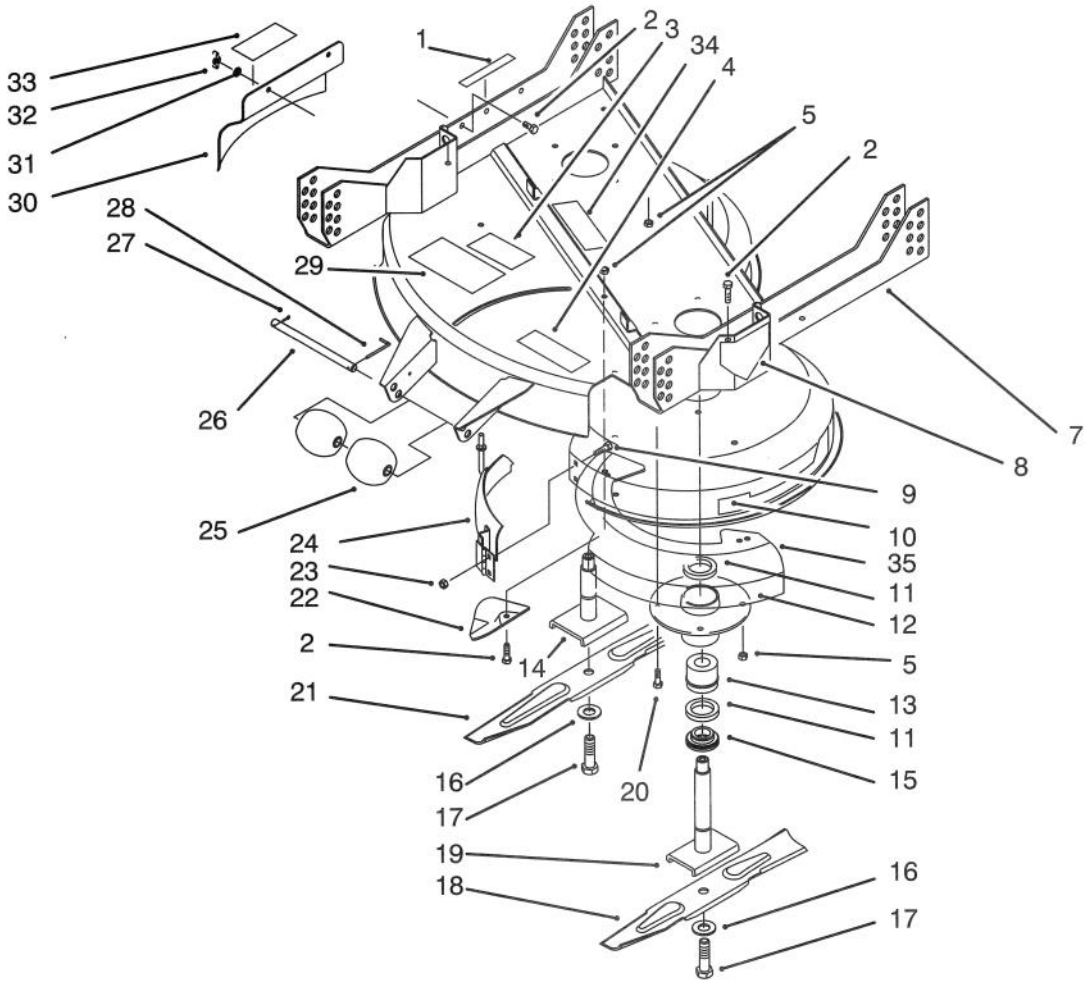

C–1078

DECK & SPINDLE ASSEMBLY

Ref. No.	Part No.	Description	No. Used
1	68–3650	Decal – Danger	1
2	322–5	Screw – Hex Hd. Cap	15
3	68–8340	Decal – Caution	1
4	85–7080	Decal – Discharge Door	1
5	3296–29	Nut – Lock	15
7	14–9679	Deck Support (Incl. Ref. #3, 4, 6, 8, & 29)	1
8	43–8480	Decal – Danger	1
9	3229–22	Bolt – Carriage	2
10	84–4340	Decal – 37"	1
11	253–139	Seal – Wave	4
12	82–5990	Housing – Spindle	2
13	46–8530	Bearing Assembly	2
14	84–4430	Shaft – Spindle	1
15	27–0950	Spacer – Spindle Bearing	2
16	3253–8	Washer – Lock	2
17	51–4060	Bolt – Blade	2
18	93–0107	Blade – 17"	1

Ref. No.	Part No.	Description	No. Used
19	51–3552	Shaft – Spindle	1
20	322–7	Screw – Hex Hd. Cap	1
21	93–0106	Blade – 21"	1
22	84–5760	Plate – Kicker	7
23	32149–2	Nut – Keps	2
24	92–2932	Cover – Front	1
25	29–4820	Roller	2
26	40–6400	Shaft – Roller	1
27	3272–11	Pin – Cotter	1
28	57–0690	Pin – Special Cotter	1
29	66–1340	Decal – Danger	1
30	86–9870	Cover – Discharge Chute	1
31	3255–8	Washer – Ext. Tooth	2
32	32103–27	Nut – Wing	2
33	82–7490	Decal – Danger	1
34	67–5360	Decal – Danger	1
35	92–2937	Insert – Deck	1

©The TORO Company –1994
All Rights Reserved.

TPS

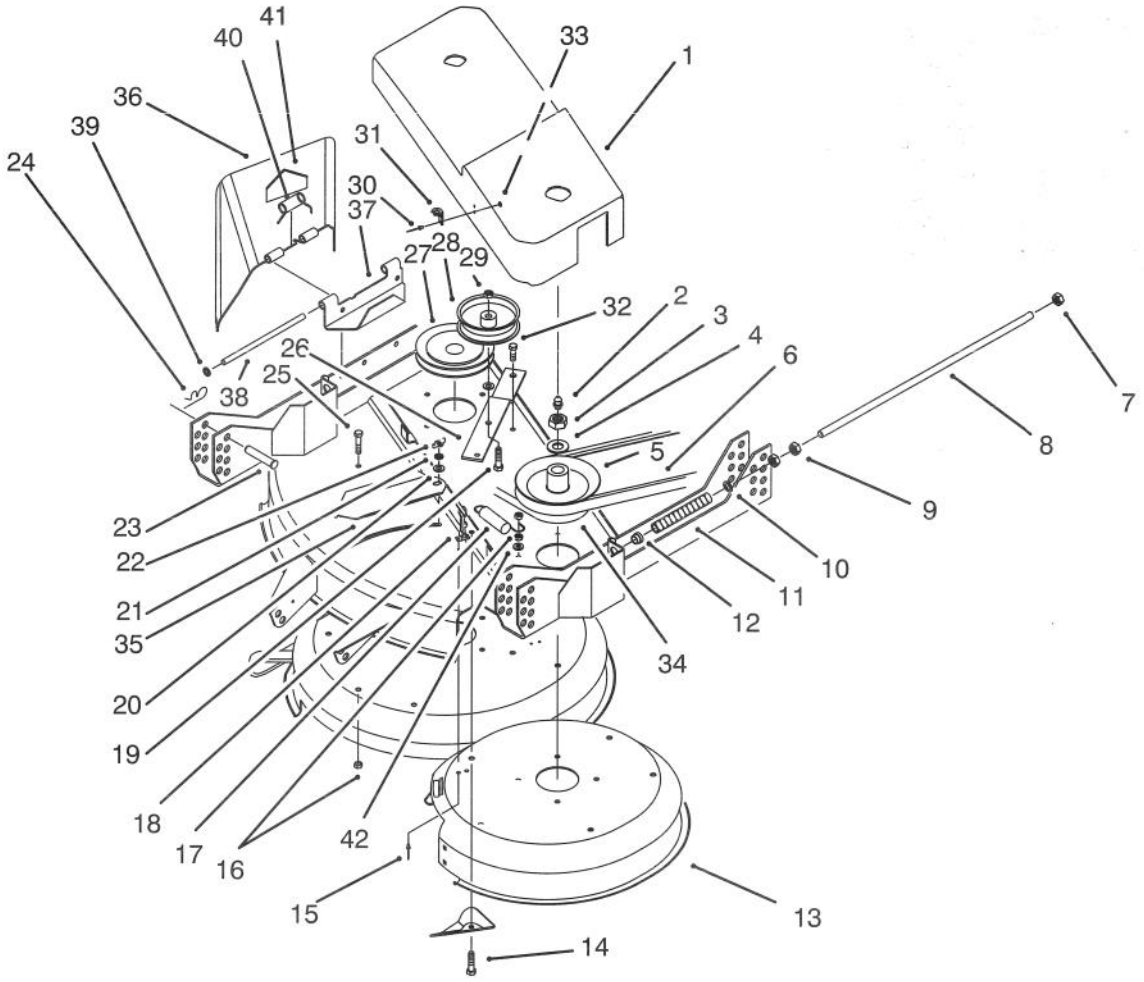

C–1073

COVER & PULLEY ASSEMBLY

Ref. No.	Part No.	Description	No. Used
1	84–4350	Cover – Pulley	1
2	302–2	Fitting – Grease	2
3	32146–20	Nut – Lock	2
4	7–4150	Spacer – Bearing	2
5	84–4360	Pulley – Center	1
6	84–4390	V–Belt – Deck Drive	1
7	3296–45	Nut – Lock	2
8	74–0310	Shaft – Adjusting	2
9	3218–5	Nut – Jam	4
10	41–8440	Washer – Flat	2
11	74–0290	Spring – Compression	2
12	256–156	Bushing	2
13	14–9689	Deck (Incl. Ref. #1 & 10 on pg. 1)	1
14	322–7	Screw – Hex Hd. Cap	1
15	3296–13	Rivet – Pop	4
16	3296–29	Nut – Lock	6
17	54–1160	Spring – Extension	1
18	117341	Latch Assembly (Incl. Ref. #31)	2
19	323–9	Screw – Hex Hd. Cap	1
20	3256–24	Washer – Flat	2

Ref. No.	Part No.	Description	No. Used
21	3255–8	Washer – Ext. Tooth	1
22	32103–27	Nut – Wing	1
23	283–55	Pin – Clevis	4
24	3290–355	Cotter – Hairpin	4
25	322–5	Screw – Hex Hd. Cap	4
26	84–4330	Lever – Idler	1
27	84–4440	Pulley – Outside	1
28	36–3220	Pulley – Idler	1
29	3296–39	Nut – Hex	1
30	3290–415	Rivet – Pop	4
31	117343	Keeper – Latch	2
32	19–1471	Bolt – Shoulder	1
33	3269–10	Washer – Backup	4
34	84–4410	V–Belt – Deck	1
35	84–4420	Cover – Slot	1
36	82–7520	Deflector – Discharge	1
37	82–7530	Hinge – Deflector	1
38	82–7540	Pin – Hinge	1
39	32151–56	Ring – Retaining	2
40	40–6230	Spring – Torsion	1
41	54–9220	Decal – Danger	1
42	3256–23	Washer – Flat	3

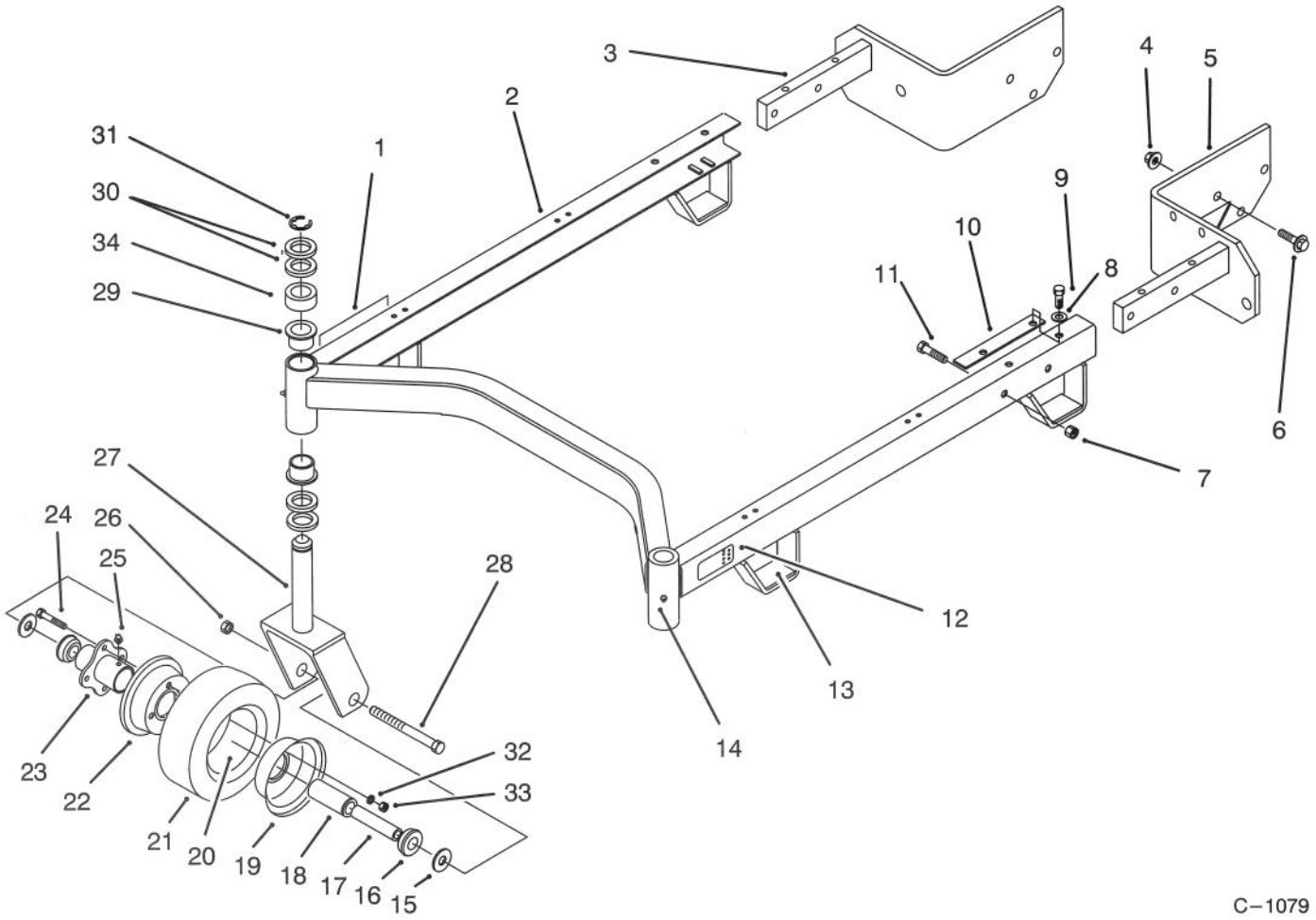

C–1079

CARRIER FRAME ASSEMBLY

Ref. No.	Part No.	Description	No. Used
1	74–0940	Decal – Height of Cut, R.H. – 1–4"	1
*	85–7460	Decal – Height of Cut, R.H. – 2–5"	1
2	55–4631	Suspension Frame W.A.	1
3	86–7110	Angle Bracket W.A. – R.H.	1
4	32128–23	Nut – Lock	6
5	86–7100	Angle Bracket W.A. – L.H.	1
6	3234–6	Screw – Hex Washer Hd. (Gear Drive Only)	6
*	3234–32	Screw – Hex Washer Hd. (Hydraulic Drive Only)	6
7	32152–2	Nut – Lock	4
8	3256–24	Washer – Flat	4
9	3235–21	Screw – Hex Hd. Cap	4
10	62–6980	Shim – Carrier	2
11	323–9	Screw – Hex Hd. Cap	4
12	68–8360	Decal – Height of Cut, L.H. – 1–4"	1
*	85–7450	Decal – Height of Cut, L.H. – 2–5"	1
13	74–0340	Cushion – Rubber	4
14	302–5	Fitting – Grease	2

Ref. No.	Part No.	Description	No. Used
15	3256–6	Washer – Flat	4
16	62–5580	Bushing	4
17	68–8980	Spanner	2
18	62–5570	Bearing	2
19	68–8930	Wheel Half – male	2
20	68–8950	Tube w/Valve	2
21	68–8960	Tire	2
22	68–8920	Wheel Half – Female	2
23	68–8940	Hub – Centered	2
24	54–8890	Bolt – Wheel	8
25	302–61	Fitting – Grease	2
26	32153–5	Nut – Lock	2
27	74–0251	Front Castor Fork W.A.	2
28	325–19	Screw – Hex Hd. Cap	2
29	28–9290	Bushing	4
30	3–6781	Washer – Thrust	8
31	32151–91	Ring – Retaining	2
32	3253–4	Washer – Lock	8
33	3217–6	Nut – Lock	8
34	93–1167	Spacer – Castor	2
*	13–3869	Caster Wheel Assembly (Incl Ref. #16, 18–25, 32 & 33)	2

* Not Illustrated.

TORO PART NUMBER INDEX

Part No.	Description	Pg. No.	Ref. No.	Qty.
117341	Latch Assembly	2	18	2
117343	Keeper – Latch	2	31	2
3–6781	Washer – Thrust	3	30	8
7–4150	Spacer – Bearing	2	4	2
13–3869	Caster Wheel Assembly	3	*	2
14–9679	Deck Support	1	7	1
14–9689	Deck	2	13	1
19–1471	Bolt – Shoulder	2	32	1
27–0950	Spacer – Spindle Bearing	1	15	2
28–9290	Bushing	3	29	4
29–4820	Roller	1	25	2
36–3220	Pulley – Idler	2	28	1
40–6230	Spring – Torsion	2	40	1
40–6400	Shaft – Roller	1	26	1
41–8440	Washer – Flat	2	10	2
43–8480	Decal – Danger	1	8	1
46–8530	Bearing Assembly	1	13	2
51–3552	Shaft – Spindle	1	19	1
51–4060	Bolt – Blade	1	17	2
54–1160	Spring – Extension	2	17	1
54–8890	Bolt – Wheel	3	24	8
54–9220	Decal – Danger	2	41	1
55–4631	Suspension Frame W.A.	3	2	1
57–0690	Pin – Special Cotter	1	28	1
62–5570	Bearing	3	18	2
62–5580	Bushing	3	16	4
62–6980	Shim – Carrier	3	10	2
66–1340	Decal – Danger	1	29	1
67–5360	Decal – Danger	1	34	1
68–3650	Decal – Danger	3	12	1
68–8340	Decal – Caution	1	3	1
68–8360	Decal – H.O.C.	3	12	1
68–8920	Wheel Half – Female	3	22	2
68–8930	Wheel Half – Male	3	19	2
68–8940	Hub – Centered	3	23	2
68–8950	Tube w/Valve	3	20	2
68–8960	Tire	3	21	2
68–8980	Spanner	3	17	2
74–0251	Front Castor ork W.A.	3	27	2
74–0290	Spring – Compression	2	11	2
74–0310	Shaft – Adjusting	2	8	2
74–0340	Cushion – Rubber	3	13	4
74–0940	Decal – H.O.C.	3	1	1
82–5990	Housing – Spindle	1	12	2
82–7490	Decal – Danger	1	33	1
82–7520	Deflector – Discharge	2	36	1
82–7530	Hinge – Deflector	2	37	1
82–7540	Pin – Hinge	2	38	1
84–4330	Lever – Idler	2	26	1
84–4340	Decal – 37"	1	10	1
84–4350	Cover – Pulley	2	1	1
84–4360	Pulley – Center	2	5	1
84–4390	V–Belt – Deck Drive	2	6	1
84–4410	V–Belt – Deck	2	34	1
84–4420	Cover – Slot	2	35	1
84–4430	Shaft – Spindle	1	14	1
84–4440	Pulley – Outside	2	27	1
84–5760	Plate – Kicker	1	22	7
85–7080	Decal – Discharge Door	1	4	1
85–7450	Decal – HOC, LH, 2–5"	3	*	1
85–7460	Decal – HOC, RH, 2–5"	3	*	1
86–7100	Angle Bracket W.A. – I.H.	3	5	1
86–7110	Angle Bracket W.A. – R.H.	3	3	1
86–9870	Cover – Discharge Chute	1	30	1
92–2932	Cover – Front	1	24	1
92–2937	Insert – Deck	1	35	1
93–0106	Blade – 21"	1	21	1
93–0107	Blade – 17"	1	18	1
93–1167	Spacer – Castor	3	34	2
253–139	Seal – Wave	1	11	4
256–156	Bushing	2	12	2
283–55	Pin – Clevis	2	23	4
302–2	Fitting – Grease	2	2	2
302–5	Fitting – Grease	3	14	2
302–61	Fitting – Grease	3	25	2
322–5	Screw – Hex Hd. Cap	1	2	15
322–5	Screw – Hex Hd. Cap	2	25	4
322–7	Screw – Hex Hd. Cap	1	20	1
322–7	Screw – Hex Hd. Cap	2	14	1
323–9	Screw – Hex Hd. Cap	3	11	4
323–9	Screw – Hex Hd. Cap	2	19	1
325–19	Screw – Hex Hd. Cap	3	28	2
3217–6	Nut – Lock	3	33	8
3218–5	Nut – Jam	2	9	4
3229–22	Bolt – Carriage	1	9	2
3234–6	Screw – Hex Washer Hd.	3	6	6
3234–32	Screw – Hex Washer Hd.	3	*	6
3235–21	Screw – Hex Hd. Cap	3	9	4
3253–4	Washer – Lock	3	32	8
3253–8	Washer – Lock	1	16	2
3255–8	Washer – Ext. Tooth	2	21	1
3255–8	Washer – Ext. Tooth	1	31	2
3256–6	Washer – Flat	3	15	4
3256–23	Washer – Flat	2	42	3
3256–24	Washer – Flat	3	8	4
3256–24	Washer – Flat	2	20	2
3269–10	Washer – Backup	2	33	4
3272–11	Pin – Cotter	1	27	1
3290–355	Cotter – Hairpin	2	24	4
3290–415	Rivet – Pop	2	30	4
3296–13	Rivet – Pop	2	15	4
3296–29	Nut – Lock	1	5	15
3296–29	Nut – Lock	2	16	6
3296–39	Nut – Hex	2	29	1
3296–45	Nut – Lock	2	7	2
32103–27	Nut – Wing	2	22	1
32103–27	Nut – Wing	1	32	2
32128–23	Nut – Lock	3	4	6
32146–20	Nut – Lock	2	3	2
32149–2	Nut – Keps	1	23	2
32151–56	Ring – Retaining	2	39	2
32151–91	Ring – Retaining	3	31	2
32152–2	Nut – Lock	3	7	4
32153–5	Nut – Lock	3	26	2

*Not Illustrated