FORM NO. 3316–801

TORO®

MODEL NO. 70040–4900001 & UP

PARTS CATALOG

WHEEL HORSE®
8–25 RECYCLER® RIDING MOWER

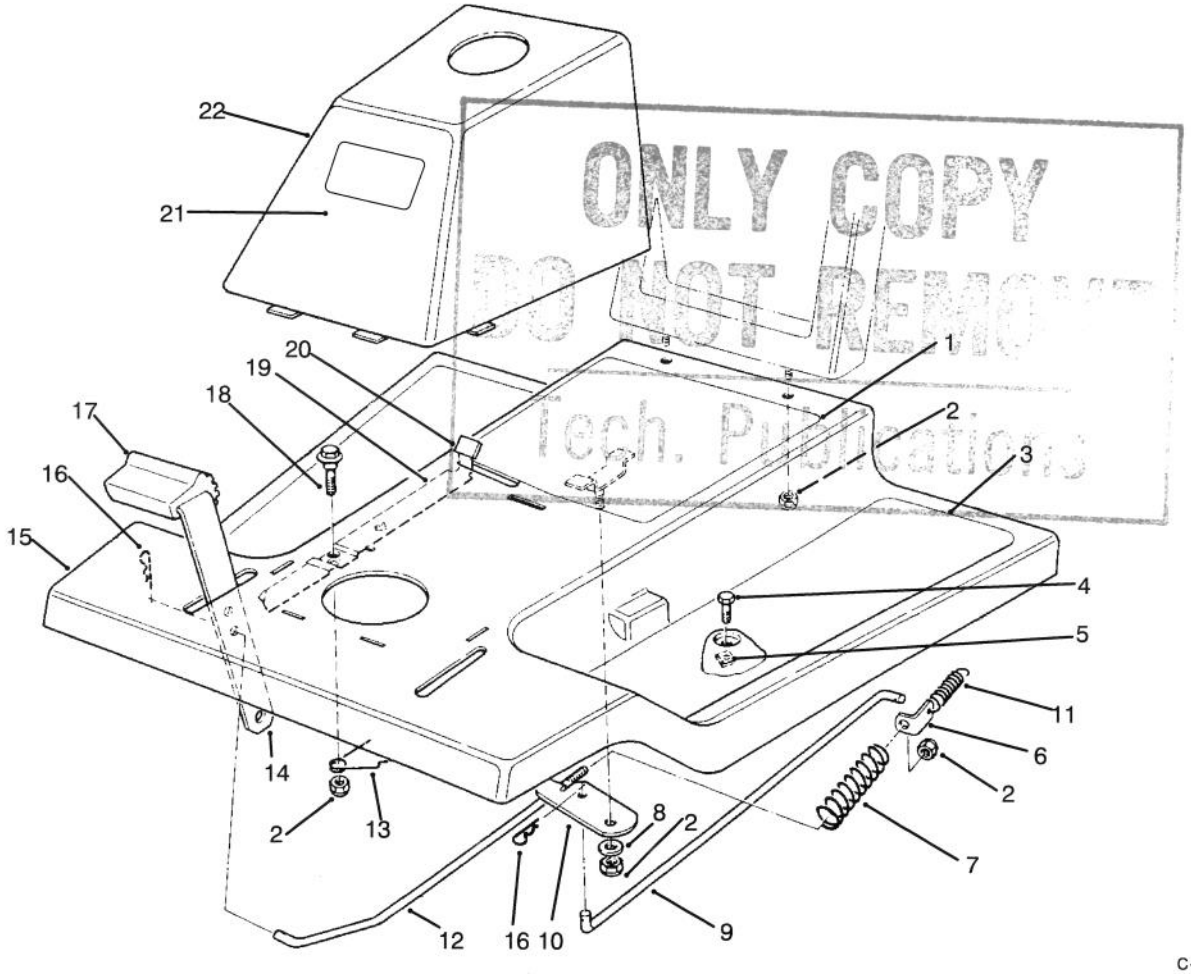

ONLY COPY
DO NOT REMOVE
Tech. Publications

C–1940

FRONT BODY ASSEMBLY

Ref. No.	Part No.	Description	No. Used
1	76–1620	Decal – Instruction	1
2	3296–29	Nut – Lock	5
3	44–7030	Tread – Foot Rest	2
4	32104–110	Screw – Cap Hex. Hd.	4
5	3290–347	Nut – U–Type	4
6	67–1590	Bracket – Brake Return	1
7	67–1430	Spring – Compression	1
8	26–9530	Washer – Pivot	1
9	67–1340	Rod – Brake, Transmission	1
10	67–1330–03	Lever – Brake, Bellcrank	1
11	67–1450	Spring – Extension	1
12	67–1350	Rod – Front, Brake	1
13	19–1970	Spring – Brake, Parking	1
14	67–1130–03	Pedal – Brake & Clutch	2
15	67–1070–01	Body W.A. – Front	1
16	3290–250	Pin – Hair, Cotter	2
17	65–2920	Pad – Pedal	2
18	19–1470	Bolt – Shoulder	1
19	19–1610–03	Lever – Brake, Parking	1
20	19–2200	Tip – Brake, Parking	1
21	92–7981	Decal – Toro	1
22	55–7101	Tower (Incl. Ref. #21)	1

©1994 The TORO Company
All Rights Reserved

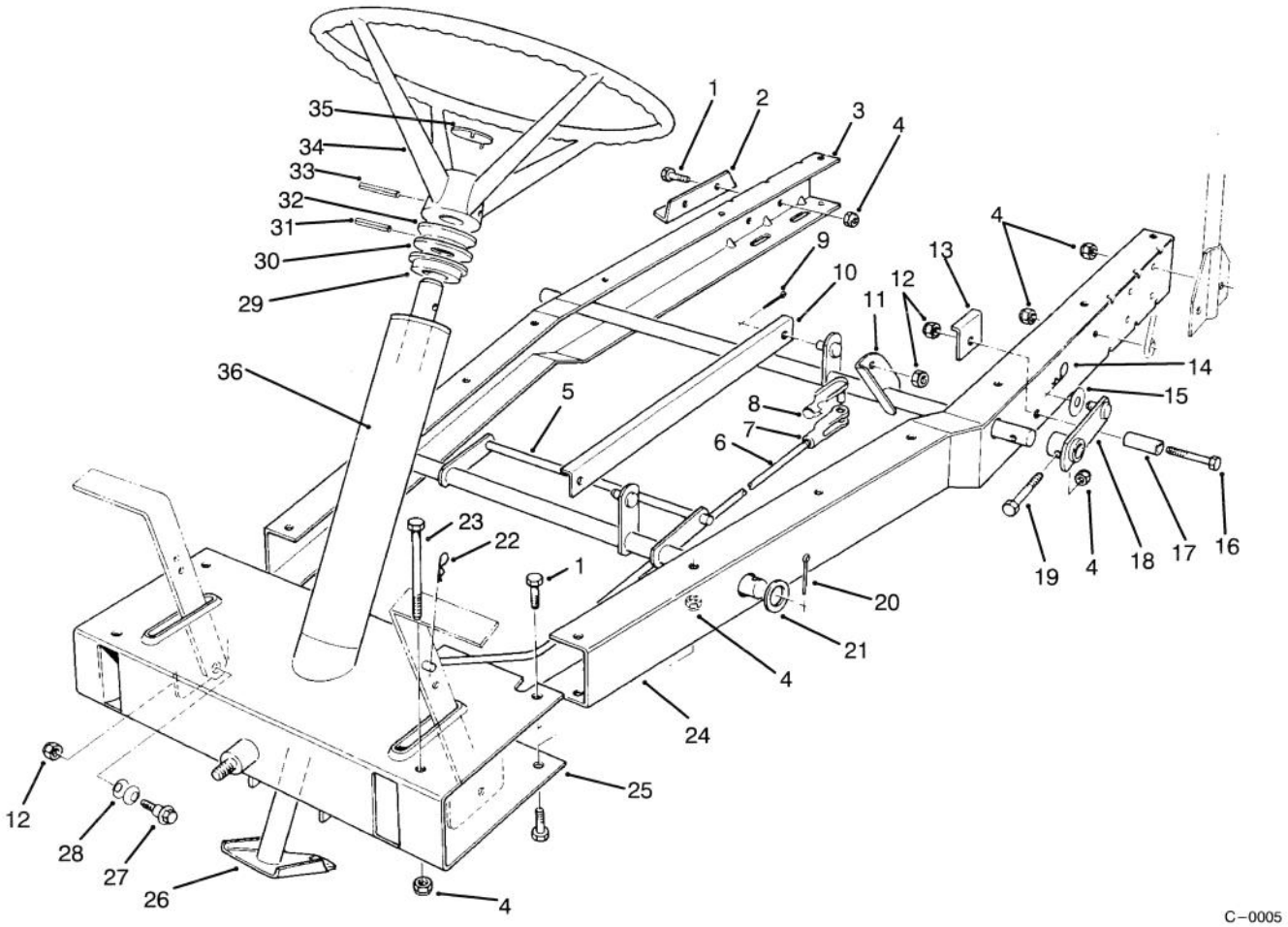

C–0005

FRAME ASSEMBLY

Ref. No.	Part No.	Description	No. Used
1	322–3	Screw – Cap Hex. Hd.	6
2	44–7140–01	Mount – Bearing, Axle	1
3	67–0520–01	Channel – R.H.	1
4	3296–29	Nut – Lock	16
5	67–0010–03	Lift W.A. – Front, Deck	1
6	67–0430	Rod – Clutch	1
7	282–27	Clevis	1
8		Assembly – Pin, Clevis	1
9	3272–6	Pin – Cotter	2
10	67–0090–03	Bracket – Link, H.O.C.	1
11	67–0050–01	Tube W.A. – Support, Rear	1
12	3296–39	Nut – Lock	5
13	67–1510–03	Brace – Stop, Deck	2
14	3290–355	Pin – Hair, Cotter	2
15	67–1460	Washer – Flat	2
16	323–10	Screw – Cap Hex. Hd.	2
17	68–8380	Spacer – Stop, Deck	2
18	67–0300–01	Lever W.A. – H.O.C.	2
19	46–2511	Bolt – Mounting, Axle	2

Ref. No.	Part No.	Description	No. Used
20	3272–23	Pin – Cotter	2
21	3256–29	Washer – Flat	2
22	3290–250	PIn – Hair, Cotter	1
23	322–14	Screw – Cap Hex. Hd.	2
24	67–0530–01	Channel – L.H.	1
25	67–0450–01	Frame W.A. – Front	1
26	67–0830–03	Shaft W.A. – Steering	1
27	67–0870	Bolt – Shoulder	2
28	3290–413	Washer – Belleville	4
29	67–0850	Bushing – Steering	2
30	67–0860	Washer – Steering	1
31	32121–32	Pin – Roll	1
32	67–0440	Spacer – Steering	1
33	32121–78	Pin – Roll	1
34	49–3242	Wheel – Steering	1
35	88–9840	Insert – Wheel, Steering	1
36	76–4080	Decal	1
*	13–6049	Kit – Loose parts	1

*Not Illustrated

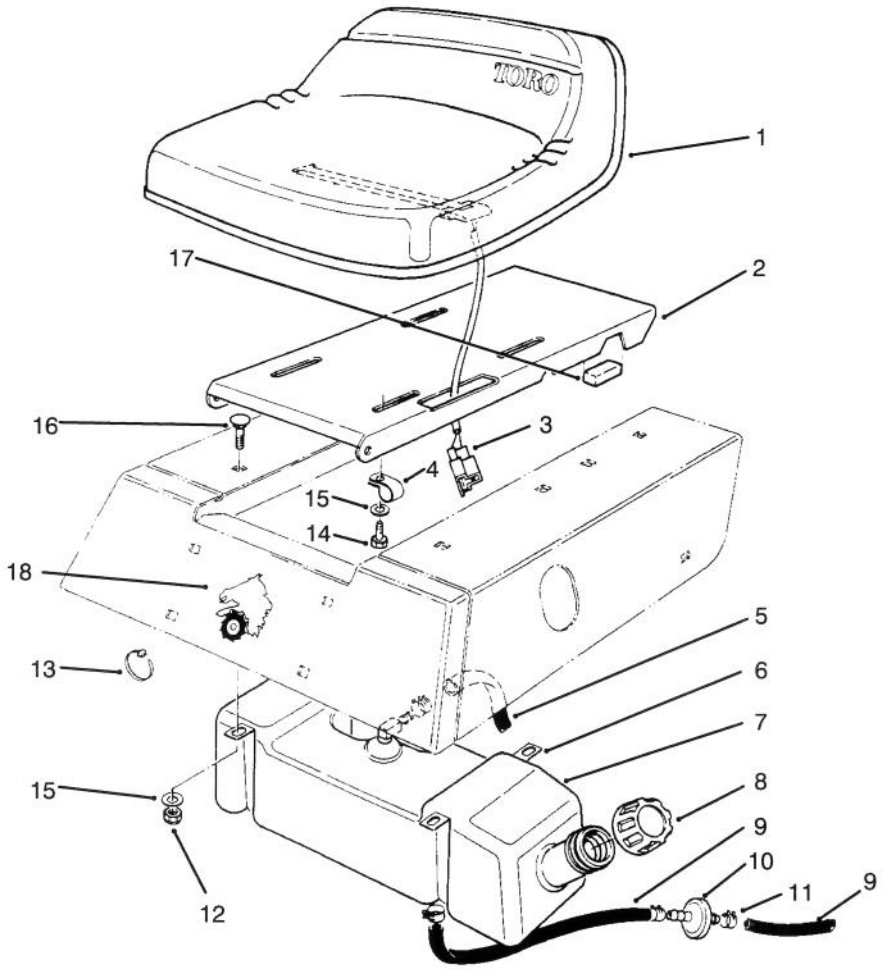

C–1941

SEAT & GAS TANK ASSEMBLY

Ref. No.	Part No.	Description	No. Used
1	66–6680	Seat	1
2	67–1241	Base – Seat	1
3	38–1420	Switch – Seat	1
4	18–2970	R–Clamp	1
5	47–2986	Hose – Gas	1
6	67–0950	Strap – Tank, Gas	2
7	80–4580	Tank – Gas	1
8	55–3576	Assembly – Cap, Gas	1
9	47–2964	Hose – Gas	2

Ref. No.	Part No.	Description	No. Used
10	56–6360	Filter	1
11	2412–98	Clamp – Hose	5
12	3296–29	Nut – Lock	4
13	3290–378	Tie – Cable	1
14	322–3	Screw – Cap Hex. Hd.	4
15	3256–23	Washer – Flat	8
16	3230–20	Bolt – Carriage	6
17	66–6920	Pad – Isolator	2
18	92–7978	Decal – Horsehead	1

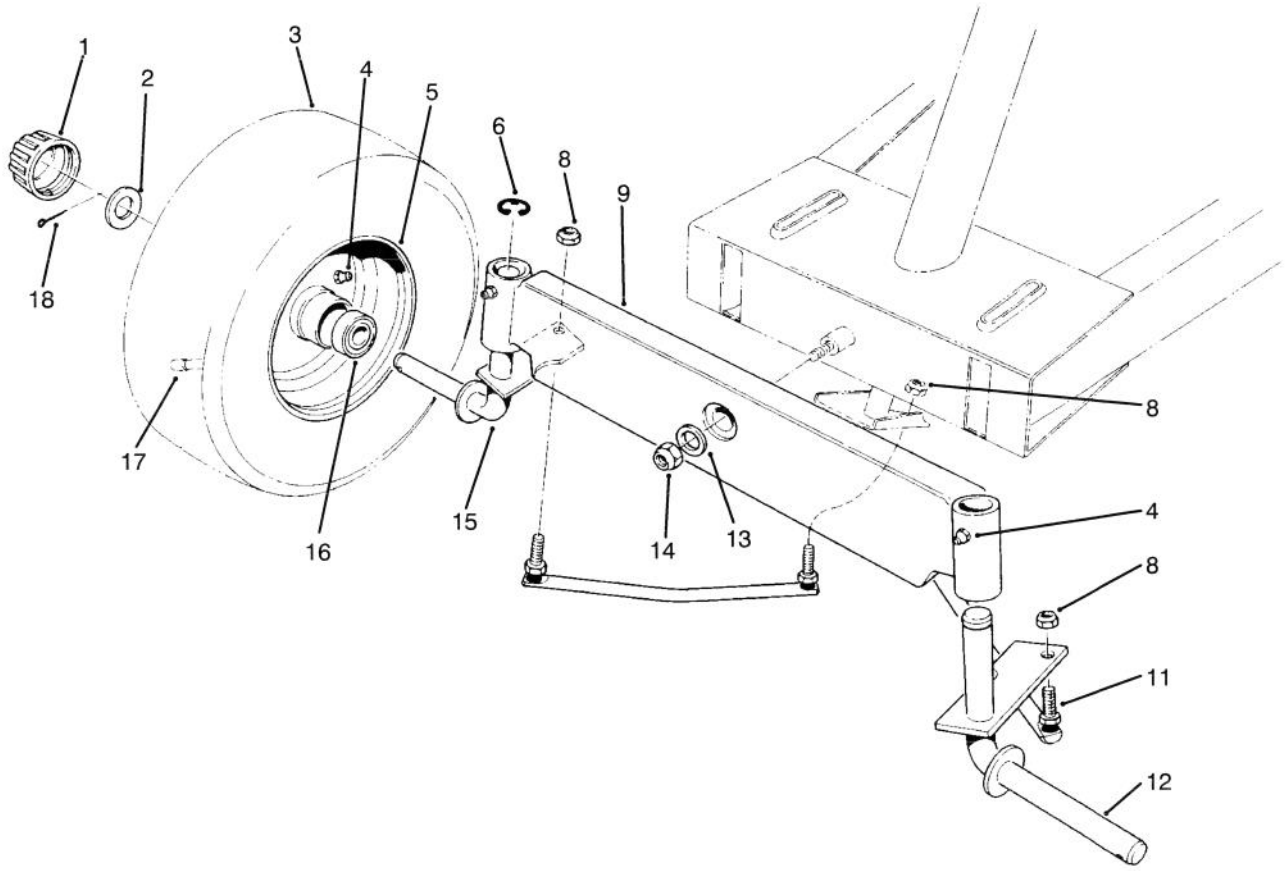

C–0003A

FRONT AXLE ASSEMBLY

Ref. No.	Part No.	Description	No. Used
1	61–9780	Cap – Hub	2
2	28–2480	Washer – Flat	2
3	231–116	Tire	2
4	302–5	Fitting – Grease	4
5	217–80	Rim	2
6	32151–48	Ring – Retaining	2
8	3296–4	Nut – Lock	4
9	67–0990	Axle – Front	1

Ref. No.	Part No.	Description	No. Used
11	67–0880	Assembly – Tie Rod	2
12	67–0810–01	Spindle – L.H.	1
13	3256–26	Washer – Flat	1
14	3296–25	Nut – Lock	1
15	67–0800–01	Spindle – R.H.	1
16	110513	Bearing	4
17	232–27	Valve Stem w/Cap	2
18	3272–12	Pin – Cotter	2

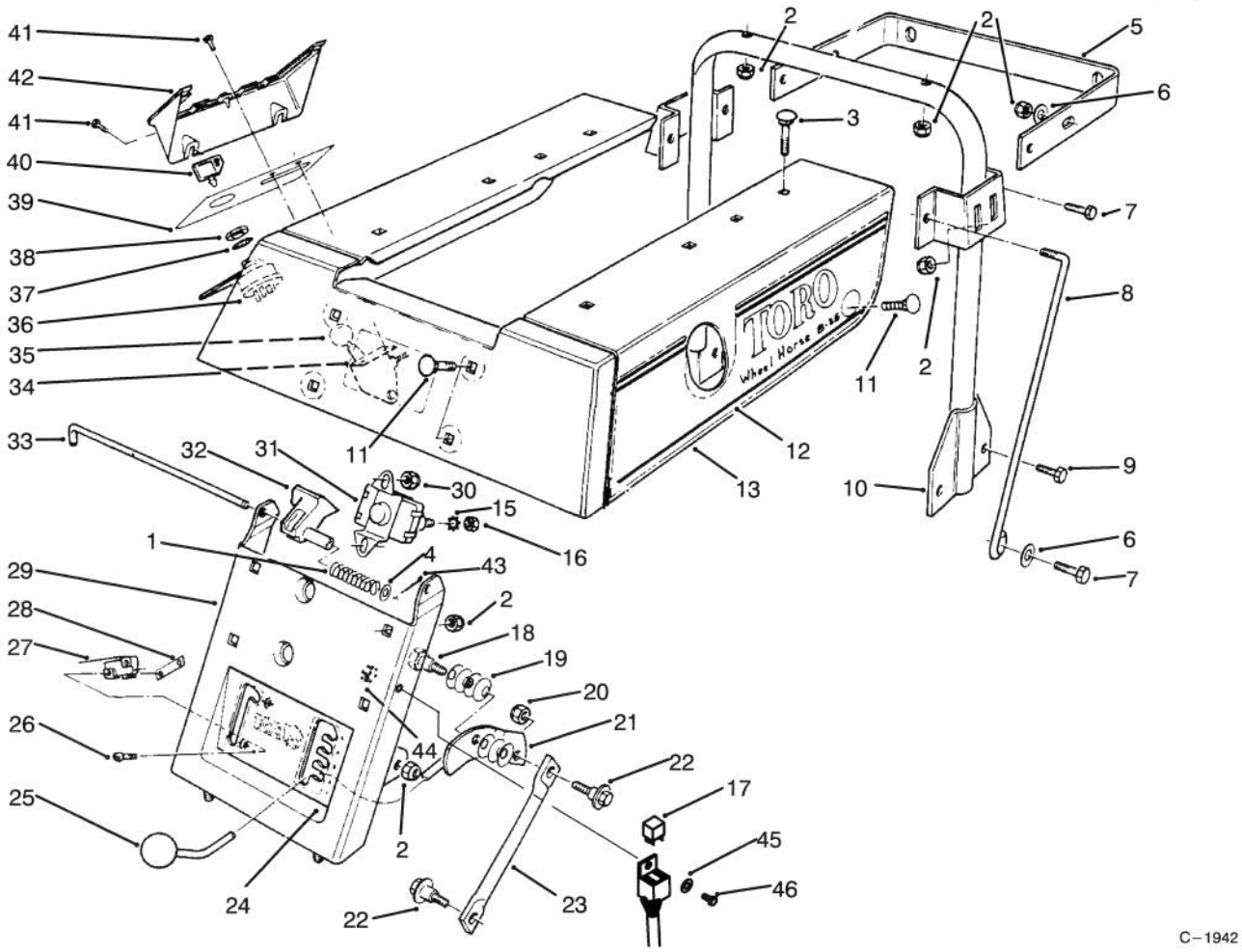

REAR BODY ASSEMBLY

Ref. No.	Part No.	Description	No. Used
1	71–8310	Spring – Prop, Seat	1
2	3296–29	Nut – Lock	11
3	3230–3	Bolt – Carriage	2
4	3256–22	Washer – Flat	1
5	67–1500–03	Bar – Stand	1
6	3256–23	Washer – Flat	4
7	322–5	Screw – Cap Hex. Hd.	4
8	67–1480	Brace – Support, Seat	2
9	322–3	Screw – Cap Hex. Hd.	4
10	67–0790–03	Support W.A. – Seat	1
11	3230–20	Bolt – Carriage	1
12	92–7979	Decal – Toro L.H.	1
*	92–7980	Decal – Toro R.H.	1
13	67–0231–01	Body W.A. – Rear	1
15	3255–7	Washer – Lock, Int. Tooth	2
16	3218–1	Nut – Jam	2
17	48–4700	Relay	1
18	28–0540	Bolt – Shoulder	1
19	3290–413	Washer – Belleville	7
20	3296–39	Nut – Lock	1
21	67–0270	Handle W.A. – H.O.C.	1
22	67–0870	Bolt – Shoulder	2
23	67–0080	Link – H.O.C.	1
24	76–3920	Decal – H.O.C./Deck Engage.	1

Ref. No.	Part No.	Description	No. Used
25	233–22	Knob	1
26	3290–313	Screw – Pan Head	2
27	40–8200	Switch – Micro	1
28	3290–354	Nut – Double	1
29	67–1090–01	Support W.A. – Seat	1
30	3296–42	Nut – Lock	2
31	47–1910	Solenoid	1
32	80–4330	Prop – Seat	1
33	80–4550	Rod – Base, Seat	1
34	66–6640	Control – Throttle	1
35	233–59	Knob	1
36	23–0660	Switch – Ignition (Incl. Ref. #37 & 38)	1
37	3254–5	Washer – Lock, Int. Tooth	1
38	218–461	Nut – Hex.	1
39	67–1270	Decal – Panel, Control	1
40	63–8360	Key	2
41	32144–42	Screw – Hex. Hd. Tapping	4
42	67–1030	Cover – Panel, Control	1
43	3274–4	Pin – Cotter	1
44	3296–2	Nut – Lock	1
45	3256–14	Washer – Flat	1
46	3290–134	Screw – Cap Mach. Hd.	1

*Not Illustrated

3316–801

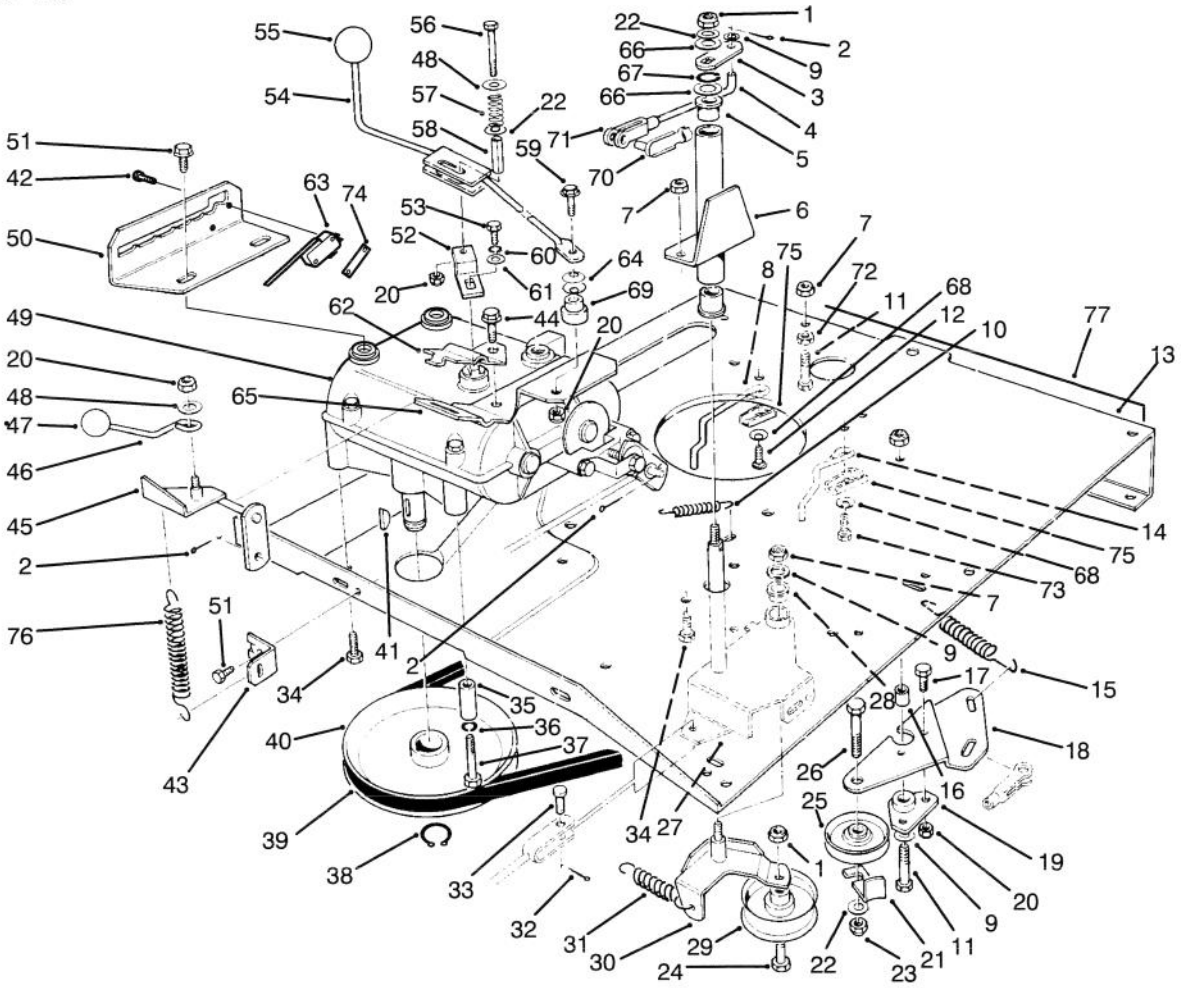

C–1506

TRANSMISSION & LINKAGE ASSEMBLY

Ref. No.	Part No.	Description	No. Used
1	3296–39	Nut – Lock	2
2	3272–6	Pin – Cotter	1
3	67–0690–03	Flat – Deck Engage	1
4	68–8370	Link – Deck Engage	1
5	256–90	Bushing	3
6	67–0540–03	Tube W.A. – Pivot (Incl. Ref. #5)	1
7	3296–29	Nut – Lock	8
8	67–0930	Guide R.H. – Belt, Engine	1
9	3256–23	Washer – Flat	3
10	26–6700	Spring – Return, Brake	1
11	322–6	Screw – Cap Hex. Hd.	1
12	3230–2	Bolt – Carriage	1
13	76–4090–01	Plate – Engine	1
14	67–0940	Guide L.H. – Belt, Engine	1
15	68–9950	Spring – Traction	1
16	67–0410	Spacer – Pivot	1
17	321–4	Screw – Cap Hex. Hd.	2
18	67–0420–03	Plate – Mount, Idler	1
19	67–0400	Mount – Pivot	1
20	3296–42	Nut – Lock	5
21	12–9020	Retainer – Belt	1
22	3256–24	Washer – Flat	3
23	3296–59	Nut – Lock	1

Ref. No.	Part No.	Description	No. Used
24	323–10	Screw – Cap Hex. Hd.	1
25	12–5820	Pulley – Idler, Traction	1
26	323–8	Screw – Cap Hex. Hd.	1
27	67–0360	Bracket – Arm, Idler (Incl. Ref. #28)	1
28	256–155	Bushing	1
29	56–9870	Pulley – Idler, Deck	1
30	67–0330–03	Idler – Plate, Mount	1
31	67–9170	Spring	1
32	3274–4	Pin – Cotter	1
33	283–67	Pin – Clevis	1
34	322–3	Screw – Cap Hex. Hd.	5
35	67–0920	Guide – Belt	1
36	3253–4	Washer – Lock	1
37	322–10	Screw – Cap Hex. Hd.	1
38	32120–64	Ring – Retaining	1
39	67–0900	Belt – Traction	1
40	82–6450	Pulley – Transmission	1
41	3257–23	Key	1
42	147665	Screw – Tapping	2
43	67–0750	Bracket – Mount, Spring	1
44	32144–70	Screw – Hex. Hd. Tapping	1
45	67–0600–03	Lever W.A. – Deck Engage	1
46	67–0640	Handle – Deck Engage	1

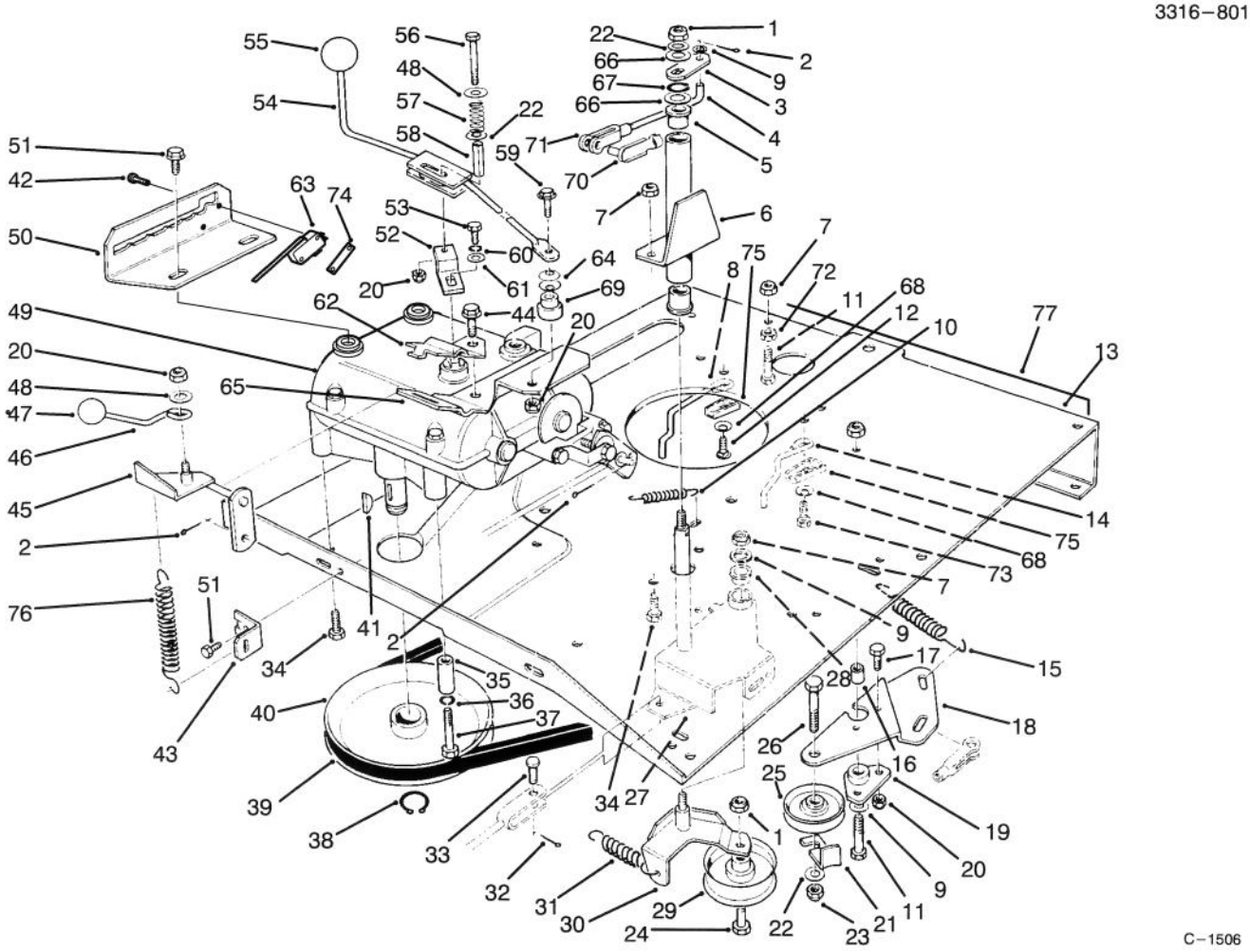

TRANSMISSION & LINKAGE ASSEMBLY (CONTINUED)

Ref. No.	Part No.	Description	No. Used
47	233–22	Knob	1
48	3256–55	Washer – Fender	2
49	67–1400	Transmission	1
50	88–9810–03	Gate – Shift	1
51	32144–14	Screw – Wash. Hd., Tap.	4
52	56–7620	Lever – Shift	1
53	329–4	Screw – Cap Hex. Hd.	1
54	76–3940–03	Lever W.A. – Shift	1
55	233–48	Knob	1
56	321–15	Screw – Cap Hex. Hd.	1
57	56–7730	Spring	1
58	56–7740	Spacer	1
59	321–8	Screw – Cap Hex. Hd.	1
60	3253–3	Washer – Lock	1
61	3256–22	Washer – Flat	5
62	67–0670	Bracket – Engage, Deck	1

Ref. No.	Part No.	Description	No. Used
63	88–9930	Switch – Micro	1
64	3290–478	Washer – Belleville	2
65	67–0660	Bracket – Mount, Shifter	1
66	20–3220	Washer – Flat	2
67	32151–62	Ring – Retaining	1
68	3290–456	Washer – Belleville	2
69	76–3970	Spacer – Pivot	1
70	67–1530	Assembly – Pin, Clevis	1
71	282–27	Clevis	1
72	3218–2	Nut – Jam	1
73	32144–26	Screw – Thread Forming	1
74	3290–354	Nut – Double	1
75	76–3820	Anchor – Guide, Belt	2
76	76–4660	Spring	1
77	76–3860	Decal	1

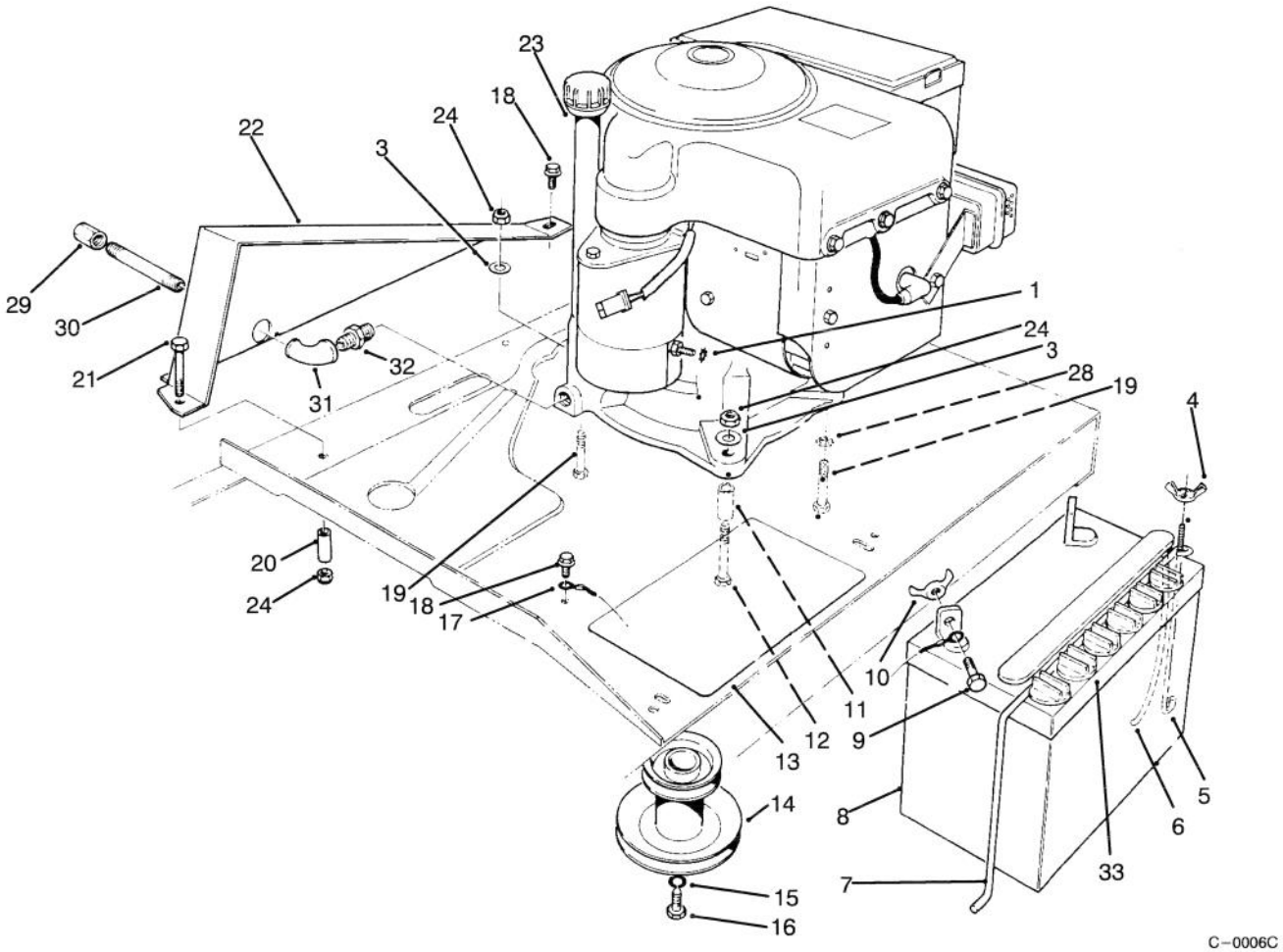

ENGINE ASSEMBLY

Ref. No.	Part No.	Description	No. Used
1	3255–7	Washer – Lock, Int. Tooth	1
3	3256–23	Washer – Flat	4
4	32103–14	Nut – Wing	1
5	56–7720	Post – Hold Down, Battery	1
6	56–2540	Tube – Drain	1
7	56–7710	Hold Down – Battery	1
8	80–2600	Battery 12V	1
9	321–4	Screw – Cap Hex. Hd.	2
10	32103–22	Nut – Wing	2
11	80–4560	Spacer	1
12	322–12	Screw – Cap Hex. Hd.	1
13	62–4300	Pad – Anti–Skid	1
14	83–4840	Pulley – Engine	1
15	3256–25	Washer – Flat	1
16	62–3760	Screw – Cap Hex. Hd.	1

Ref. No.	Part No.	Description	No. Used
17	56–7870	Assembly – Wire Battery to Ground	2
18	32144–14	Screw – Self Tapping	2
19	322–7	Screw – Cap Hex. Hd.	3
20	67–0920	Guide – Belt	1
21	322–10	Screw – Cap Hex. Hd.	1
22	67–0962–01	Guard – Chain	1
23		Engine – 8 H.P. B & S	1
24	3296–29	Nut – Lock	5
28	3255–8	Washer – Lock	4
29	288–2	Cap – Pipe	1
30	289–34	Nipple – Pipe	1
31	2811–17	Elbow – Street	1
32	2812–1	Reducer	1
33	84–8470	Cap – Battery	6

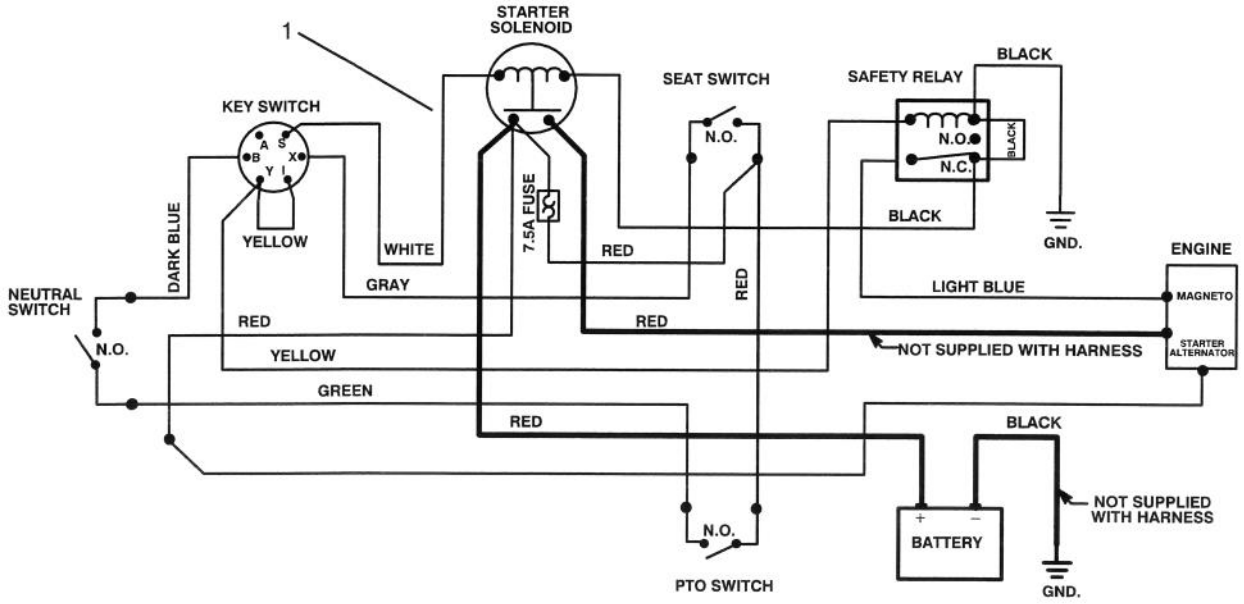

C–1578

ELECTRICAL SCHEMATIC

Ref. No.	Part No.	Description	No. Used
1	88–9870	Harness – Wire	1

Ref. No.	Part No.	Description	No. Used

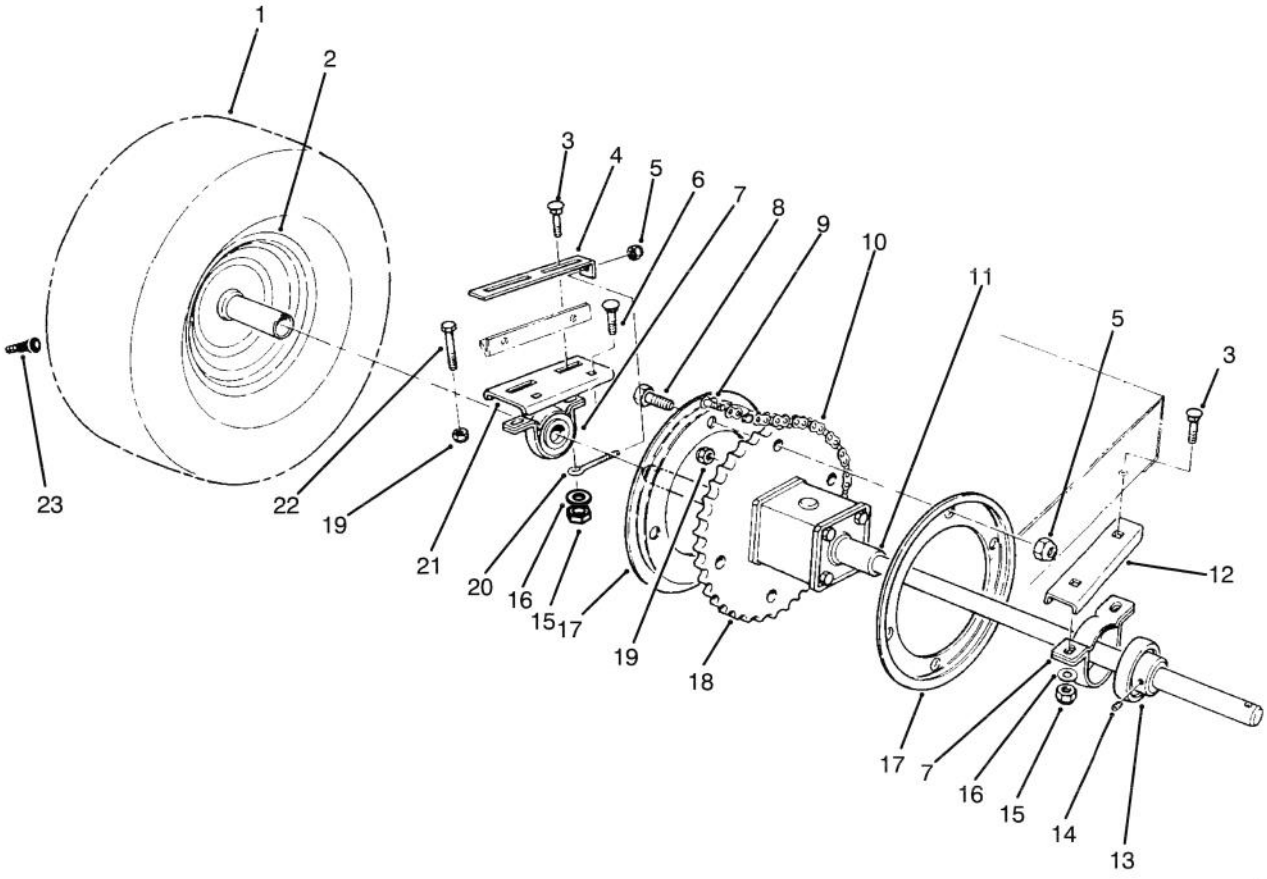

C–0008A

REAR AXLE ASSEMBLY

Ref. No.	Part No.	Description	No. Used
1	231–115	Tire	2
2	44–9760	Rim	2
3	3231–4	Bolt – Carriage	2
4	61–9990	Plate – Adjusting	1
5	3296–42	Nut – Lock	5
6	3231–25	Bolt – Carriage	4
7	47–1480	Mount – Bearing	2
8	321–4	Screw – Cap Hex. Hd.	4
9	2710–11	Link – Connecting	1
10	67–0910	Chain (Incl. Ref. #9)	1
11	56–9960	Differential	1
12	66–6630–03	Support L.H.	1

Ref. No.	Part No.	Description	No. Used
13	47–1490	Bearing (Incl. Ref. #14)	2
14	3245–32	Screw – Set	4
15	3296–39	Nut – Lock	6
16	3256–24	Washer – Flat	4
17	76–1580–03	Guide – Chain	2
18	76–4010	Sprocket	1
19	3296–29	Nut – Lock	6
20	61–9980	Screw – Adjusting	1
21	66–6620–03	Support R.H.	1
22	46–2511	Bolt – Axle	2
23	232–27	Valve Stem w/Cap	2

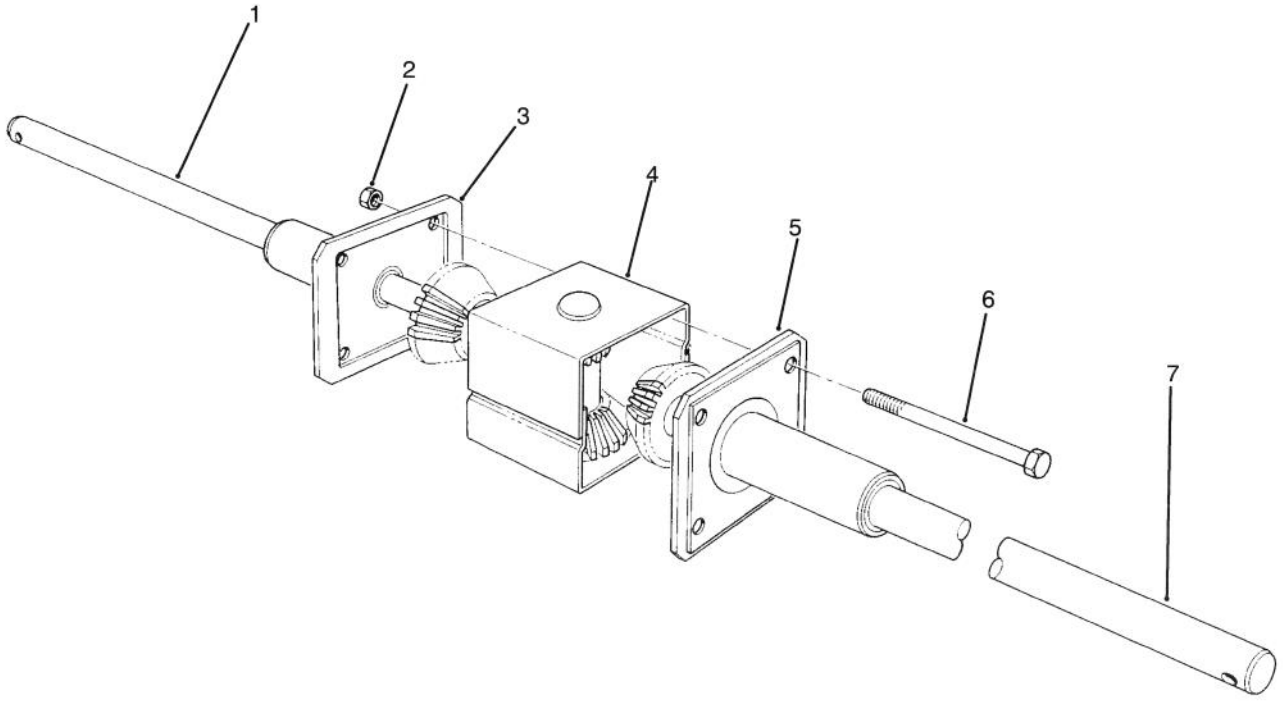

C–0010

DIFFERENTIAL ASSEMBLY

Ref. No.	Part No.	Description	No. Used
1	55–7762	Axle – R.H.	1
2	32152–1	Nut – Lock	4
3	55–7770	Cap – End, R.H.	1
4	55–7780	Case – Gear, Transfer	1

Ref. No.	Part No.	Description	No. Used
5	55–7771	Cap – End, L.H.	1
6	322–22	Screw – Cap Hex. Hd.	4
7	55–7763	Axle – L.H.	1
*	56–9960	Differential – Complete	1

*Not Illustrated

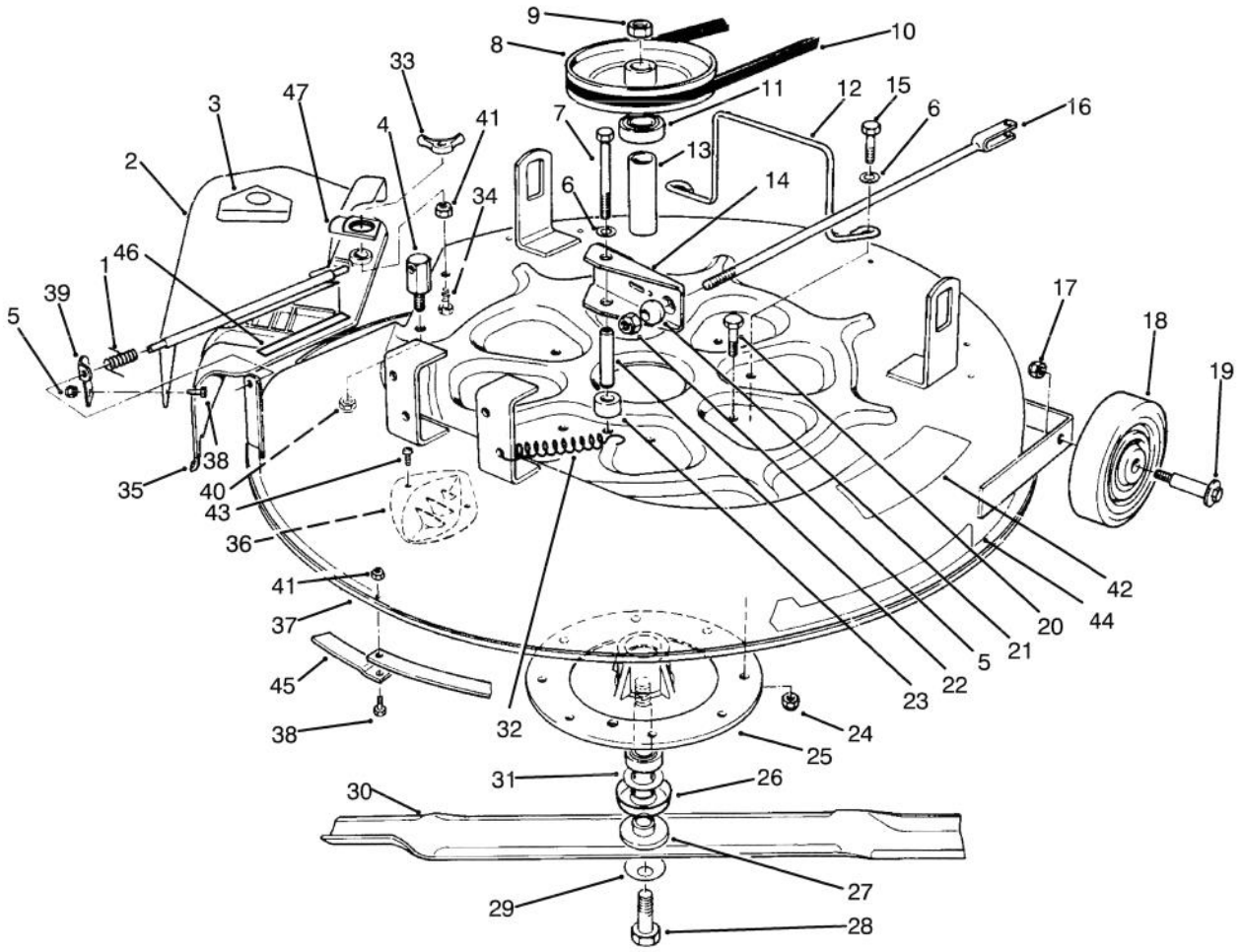

C–1943

CUTTING UNIT ASSEMBLY

Ref. No.	Part No.	Description	No. Used
1	28–8010	Spring	1
2	67–1151	Deflector (Incl. Ref. #3)	1
3	54–9220	Decal – Danger	1
4	67–0140	Post – Pivot	1
5	3296–8	Nut – Lock	2
6	3256–23	Washer – Lock	3
7	322–22	Screw – Cap Hex. Hd.	1
8	80–4460	Pulley – Deck	1
9	3219–6	Nut – Hex.	1
10	67–1390	V–Belt	1
11	38–7820	Bearing – Ball	2
12	80–4520	Guide – Belt	1
13	62–3660	Spacer – Bearing	1
14	67–1370	Assy. – Brake, Deck	1
15	322–6	Screw – Cap Hex. Hd.	2
16	67–0570	Rod W.A. – Brake, Deck	1
17	3296–39	Nut – Lock	2
18	61–9760	Wheel – Deck	2
19	56–6590	Bolt – Wheel	2
20	322–3	Screw – Cap Hex. Hd.	6
21	67–0710	Ball – Swivel	1
22	67–0730	Post – Mount, Brake	1
23	67–0740	Spacer – Brake, Deck	1
24	3296–29	Nut – Lock	9

Ref. No.	Part No.	Description	No. Used
25	67–0970	Hub – Spindle	1
26	80–4360	Shield – Bearing	1
27	80–4340	Shaft – Spindle	1
28	26–0671	Bolt – Blade	1
29	3290–465	Washer – Belleville	1
30	80–4530	Blade	1
31	80–4380	Spacer – Spindle	1
32	67–1440	Spring – Brake	1
33	32109–14	Nut – Wing	1
34	3234–21	Screw – Cap Hex. Hd.	1
35	80–4450	Cover – Recycler	1
36	80–4510	Kicker	4
37	16–2199	Deck (Incl. Ref. #42)	1
38	321–4	Screw – Cap Hex. Hd.	9
39	67–1600–01	Bracket – Deflector	1
40	3296–59	Nut – Lock	1
41	3296–42	Nut – Lock	9
42	76–4070	Decal – Danger	1
43	32144–111	Screw – Special	8
44	92–9522	Decal – Recycler	1
45	80–4540–03	Ring – Deck, Recycler	4
46	68–3650	Decal – Warning	1
47	83–6610	Tab – Hold Down	1

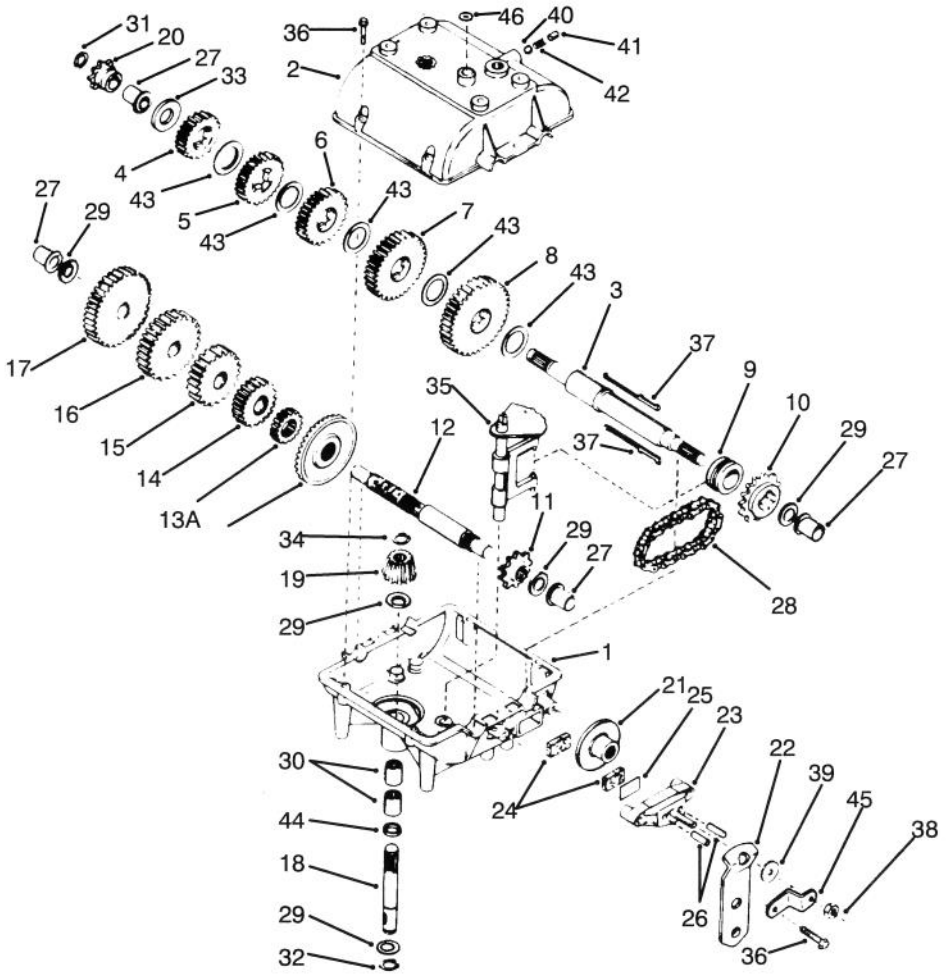

C–0441

TRANSMISSION PEERLESS MODEL 700–025

Ref. No.	Part No.	Description	No. Used
1	770061	Case – Transmission	1
2	772083	Cover – Transmission	1
3	776217	Shaft – Output	1
4	778121A	Gear – Spur (20 Teeth)	1
5	778122A	Gear – Spur (22 Teeth)	1
6	778123A	Gear – Spur (25 Teeth)	1
7	778124A	Gear – Spur (30 Teeth)	1
8	778125	Gear – Spur (35 Teeth)	1
9	784266	Collar – Shift	1
10	786083	Sprocket (18 Teeth)	1
11	786082	Sprocket (9 Teeth)	1
12	776134	Shaft – Counter	1
13	788137A	Gear – Bevel (42 Teeth)	1
13A	778136	Gear – Spur (15 Teeth)	1
14	778126A	Gear – Spur (20 Teeth)	1
15	778127A	Gear – Spur (25 Teeth)	1
16	778128A	Gear – Spur (28 Teeth)	1
17	778129A	Gear – Spur (30 Teeth)	1
18	776135	Shaft – Input	1
19	778113A	Bevel – Pinion, Input	1
20	786047	Sprocket (8 Teeth)	1
21	790003	Disk – Brake	1
22	790008A	Lever – Brake	1
23	790025	Holder – Pad, Brake	1

Ref. No.	Part No.	Description	No. Used
24	790006	Pad – Brake	2
25	790007	Plate – Pad, Brake	1
26	786026	Pin – Dowel	2
27	780105A	Bushing – Flange	4
28	786081	Chain – Roller (No. 41 Chain, 24 Links)	1
29	780072	Washer – Thrust	5
30	780086	Bearing – Needle	2
31	792072	Ring – Retaining	1
32	792035	Ring – Retaining	1
33	780109	Washer	1
34	788040	Ring – Retaining	1
35	784267	Assy. Rod & Fork – Shift	1
36	792073	Screw – Thread Forming	8
37	792089A	Key	2
38	792075	Nut – Lock	1
39	792076	Washer	1
40	792077	Ball – Steel	1
41	792078	Screw – Set	1
42	792079	Spring	1
43	780108	Washer – Thrust	5
44	792001	O–Ring	1
45	786086	Bracket – Lever, Brake	1
46	788069	Seal – Square Cut	1

BRIGGS & STRATTON MODEL NO. 195707–0121–01

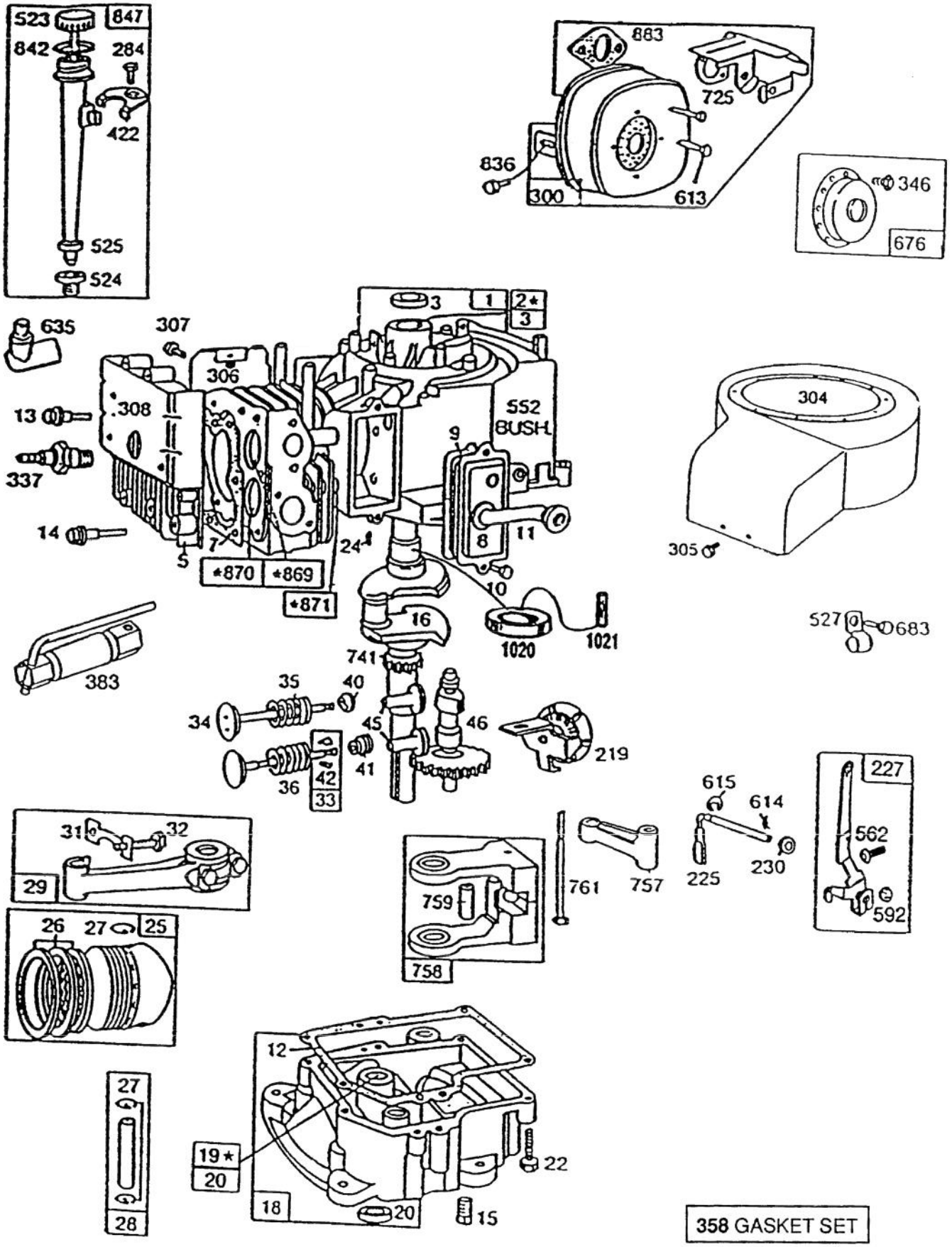

358 GASKET SET

* REQUIRES SPECIAL TOOLS TO INSTALL. SEE REPAIR INSTRUCTION MANUAL.

Assemblies include all parts shown in frames.

C–1172

BRIGGS & STRATTON MODEL NO. 195707–0121–01

Ref. No.	Part No.	Description	No. Used
1	396269	Assembly – Cylinder	1
2	399267	Bearing – Cylinder Note: Requires special tools for installation.	1
3	294606	Seal – Oil	1
5	212286	Head – Cylinder	1
*7	272163	Gasket – Head, Cylinder	1
8	391406	Assembly – Breather	1
*9	27803	Gasket – Cover, Valve	1
10	94621	Screw	1
11	280005	Tube – Breather	1
*12	271701	Gasket – Cover, Crankcase 1/64" Thick	1
*	27876	Gasket – Cover, Crankcase .005" Thick	1
*	27877	Gasket – Cover, Crankcase .009" Thick	1
13	94565	Screw – Head, Cylinder	1
14	93723	Screw – Head, Cylinder (3" Long)	1
15	94239	Plug – Drain, Oil	1
16	396876	Crankshaft Note: Order Part 94388 for timing gear pin replacement.	1
18	392548	Base – Engine	1
19	295963	Bushing – Base, Engine Note: Requires special tool for installation.	1
20	391086	Seal – Oil	1
22	93585	Screw – Base, Mounting	1
24	222698	Key – Flywheel	1
25	391673	Assy. – Piston, Std.	1
	391674	Assy. – Piston, .010" O.S.	1
	391675	Assy. – Piston, .020" O.S.	1
	391676	Assy. – Piston, .030" O.S.	1
		PISTON RING SETS Note: For Chrome Piston Ring Set – Standard Size – Order No. 299743.	
26	391669	Ring Set – Piston, Std.	1
	391670	Ring Set – Piston, .010" O.S.	1
	391671	Ring Set – Piston, .020" O.S.	1
	391672	Ring Set – Piston, .030" O.S.	1
27	68546	Lock – Piston Pin	1
28	295840	Assy.– Piston Pin, Std.	1
	295841	Assy.– Piston Pin, .005" O.S.	1
29	390402	Assy.– Rod, Connecting Note: For Connecting Rod with .020" Undersize Crankpin Bore – Order No. 390773.	1
31	222114	Lock – Screw, Conn. Rod	1

Ref. No.	Part No.	Description	No. Used
32	92659	Screw – Connecting Rod	1
33	390419	Valve – Exhaust	1
34	261055	Valve – Intake	1
35	65906	Spring – Valve, Intake	1
36	26828	Spring – Valve, Exhaust	1
40	221596	Retainer – Valve, Intake	1
41	292260	Rotocoil – Valve, Exhaust	1
42	93630	Retainer – Valve, Exhaust Rotocoil	2
45	260933	Tappet – Valve	1
46	211689	Gear – Cam	1
225	231058	Crank – Gov. (1/4" Dia.)	1
227	43935	Assy. Lever – Governor for 1/4" Dia. Crank	1
230	222450	Washer – Lever, Governor (1/4" Inside Diameter)	1
284	94419	Screw – Clamp, Mounting	1
300	398507	Muffler – Exhaust	1
304	494084	Housing – Blower	1
305	94608	Screw – Blower Hsg., Sems	1
306	224543	Shield – Cylinder	1
307	93949	Screw – Shield, Cylinder	1
308	222636	Cover – Head, Cylinder	1
337	802592	Plug – Spark	1
346	93705	Screw	1
358	299577	Gasket Set	1
383	89838	Wrench – Spark Plug	1
422	223394	Clamp – Tube, Oil Filler	1
523	391840	Cap & Dipstick – Oil Filler	1
524	68838	Seal – Tube, Filler	1
525	280133	Tube – Filler, Oil	1
527	221428	Clamp	1
552	491986	Bushing – Crank, Gov.	1
562	92613	Bolt – Lever, Governor	1
592	231082	Nut – Hex.	1
613	94042	Screw – Muffler	1
614	93306	Pin – Hair, Cotter	1
615	93307	Retainer – E–Ring	1
635	66538	Elbow – Plug, Spark	1
676	395700	Deflector – Exhaust	1
683	93572	Screw	1
725	223540	Shield – Muffler	1
741	262479	Gear – Timing	1
757	212359	Link – Counterweight	1
758	390172	Assy. – Counterweight	1
759	298909	Pin – Counterweight	1
761	93874	Screw – Counterweight	1
836	93559	Screw	1
842	270920	Seal – Cap, Filler	1
847	392066	Filler Group – Oil	1
869	211661	Seat – Valve, Intake (Std.)	1
870	211661	Seat – Valve, Exhaust (Std.)	1
871	231218	Guide – Exhaust or Intake Valve, See repair manual	1
883	272309	Gasket – Pipe, Exhaust	1
1020	261190	Eccentric	1
1021	94160	Pin – Eccentric	1

*Included in Gasket Set – Part No. 299577.

BRIGGS & STRATTON MODEL NO. 195707–0121–01

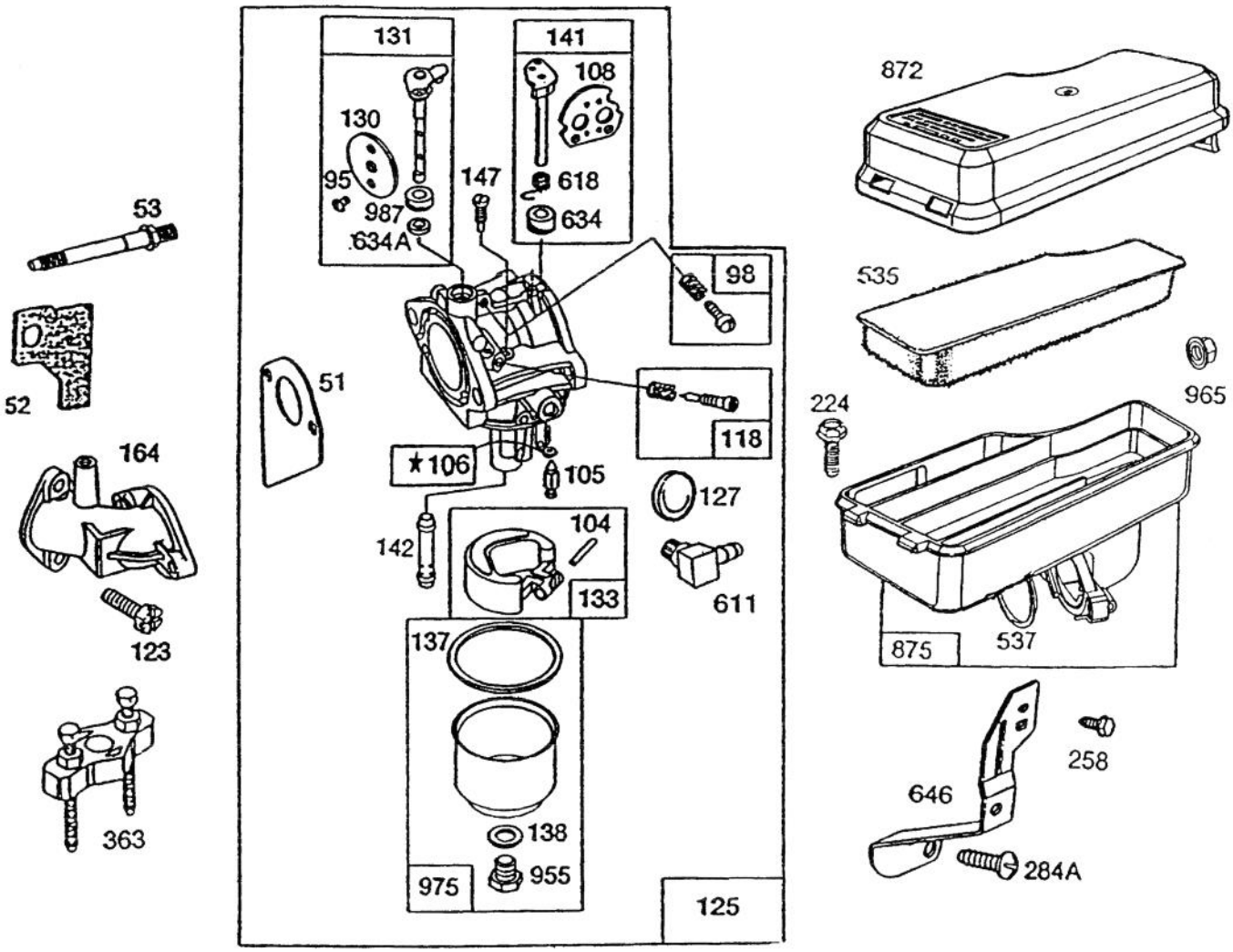

121 CARBURETOR OVERHAUL KIT

977 CARBURETOR GASKET SET

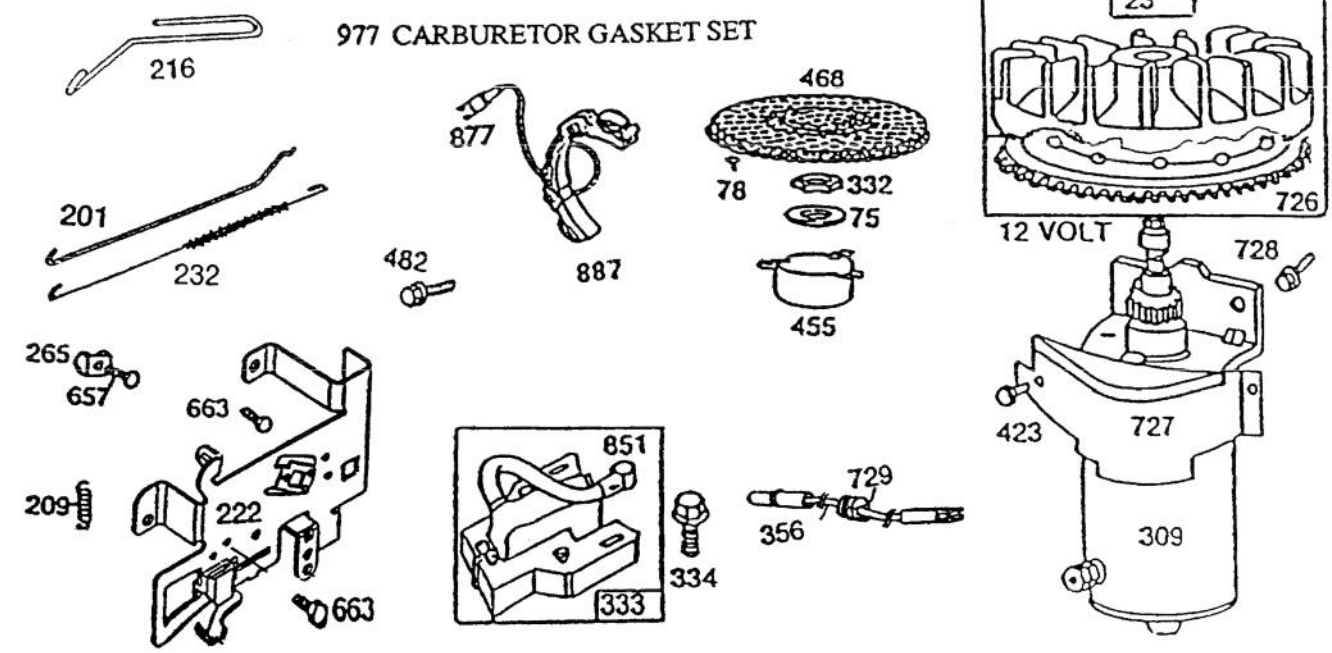

★REQUIRES SPECIAL TOOLS TO INSTALL.
SEE REPAIR INSTRUCTION MANUAL.

Assemblies include all parts shown in frames.

C–1173

BRIGGS & STRATTON MODEL NO. 195707–0121–01

Ref. No.	Part No.	Description	No. Used
223	391983	Flywheel and Ring Gear Assy. - Magneto (Incl. Aluminum Ring Gear)	1
*#51	272465	Gasket - Carburetor (Carb. to Elbow)	1
‡52	270824	Gasket - Carb. Mtg.	1
53	94637	Stud - Gasket Mtg.	1
75	224061	Washer - Spring	1
78	93805	Screw - Sem	1
*95	94098	Screw - Throttle	1
98	494382	Screw - Idle Speek	1
*104	231789	Pin - Float Hinge	1
*105	231790	Valve Assy. - Inlet Needle	1
*106	281169	Inlet Valve Seat	1
108	224540	Valve - Choke	1
118	494383	Valve - Needle	1
121	494880	Carburetor Overhaul Kit	1
123	94616	Screw - Carburetor Mtg.	1
125	494894	Carburetor Assembly	1
*127		Plug - Welch (Kit Only)	1
130	224668	Valve - Throttle	1
131	494885	Shaft & Lever - Throttle	1
133	494381	Float - Carburetor	1
*#137	281165	Gasket - Float Bowl	1
*#138	281164	Washer - Float Bowl	1
141	494380	Shaft & Lever - Choke	1
*142	494877	Nozzle - Carburetor	1
*147	231794	Screw - Nozzle	1
164	213819	Carburetor Elbow	1
201	262769	Link - Governor	1
209	260871	Spring - Governor	1
216	262768	Link - Choke	1
222	493896	Plate - Gov. Plate	1
224	94513	Screw - Sem	1
232	262787	Spring - Governor Link	1
258	94620	Screw - Hex. Tapping	1
265	221535	Clamp - Casing	1
284A	94326	Screw - Brace Mtg.	1

Ref. No.	Part No.	Description	No. Used
309		Motor - Starting (12 Volt) See Chart for Replacement Parts for Starting Motor on Illustrated Pages	1
332	92284	Nut - Flywheel	1
333	398811	Armature Assembly	1
334	93381	Screw - Armature Mtg. Sem	1
356	494328	Wire - Ground	1
363	19165	Puller - Flywheel	1
423	94073	Screw - Sem	1
455	222561	Cup - Screen Mounting	1
468	222562	Screen - Flush Rotating	1
482	93621	Screw - Sem	1
535	272405	Element - Foam Air Cleaner	1
537	281106	O-Ring - Air Cleaner	1
611	494451	Fuel Inlet Tube	1
618	262803	Spring - Choke Return	1
*634	281168	Seal - Choke Shaft	1
*634A	281167	Washer - Throttle Shaft	1
646	224614	Brace - Air Cleaner	1
657	93496	Screw - Sem	1
663	94419	Screw	1
726	392134	Gear - Ring (Aluminum) (Incl. Mtg. Parts)	1
727	395405	Cover - Starter (Incl. Mtg. Screws)	1
728	93535	Screw - Sem	1
729	281159	Clip - Lead Wire	1
851	221798	Terminal - Ignition Cable	1
872	281108	Cover - Air Cleaner	1
875	494745	Body - Air Cleaner	1
877	393814	Diode & Connector Assy.	1
887	391529	Stator Assembly - Alternator (D.C.)	1
955	94642	Screw - Fuel Bowl	1
965	94108	Nut - Lock	1
975	494378	Bowl Assy. - Carburetor	1
*987	281166	Seal - Throttle Shaft	1

*Included in Carburetor Overhaul Set - Part No. 494880.
#Included in Carburetor Gasket Set - Part No. 494385.
‡Included in Gasket Set - Part No. 299577.

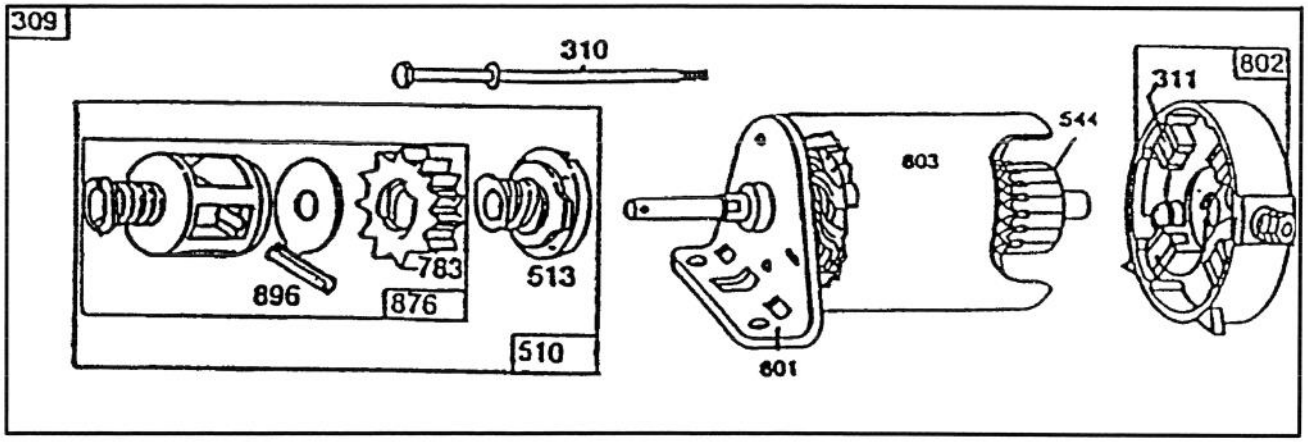

C–0784

STARTER – BRIGGS & STRATTON NO. 195707–0121–01

Ref. No.	Part No.	Description	No. Used
309	394805	Assembly – Motor & Drive	1
310	94003	Assembly – Thru Bolt	2
311	395538	Assembly – Brush	2
510	490421	Assembly – Drive (Incl. Ref. #513, 783, 876 & 896)	1
513	398003	Assembly – Clutch	1
544	390837	Assembly – Armature	1
783	280104	Gear	1

Ref. No.	Part No.	Description	No. Used
801	394856	Assembly – End Cap	1
802	395537	Assembly – Commutator, End Cap	1
803	398159	Assembly – Housing (3–21/32" Long)	1
876	490467	Kit – Retainer	1
896	94288	Pin – Roll	1

TORO PART NUMBER INDEX

Part No.	Description	Pg. No.	Ref. No.	Qty.
110513	Bearing	4	16	4
147665	Screw – Tapping	6	42	2
11–0410	Kit – Tire Chains (Optional)	10	*	1
12–5820	Pulley – Idler, Traction	6	25	1
12–9020	Retainer – Belt	6	21	1
13–6049	Kit – Loose parts	2	*	1
16–2199	Deck	12	37	1
18–2970	R–Clamp	3	4	1
19–1470	Bolt – Shoulder	1	18	1
19–1610–03	Lever – Brake, Parking	1	19	1
19–1970	Spring – Brake, Parking	1	13	1
19–2200	Tip – Brake, Parking	1	20	1
20–3220	Washer – Flat	7	66	2
23–0660	Switch – Ignition	5	36	1
26–0671	Bolt – Blade	12	28	1
26–6700	Spring – Return, Brake	6	10	1
26–9530	Washer – Pivot	1	8	1
28–0540	Bolt – Shoulder	5	18	1
28–2480	Washer – Flat	4	2	2
28–8010	Spring	12	1	1
38–1420	Switch – Seat	3	3	1
38–7820	Bearing – Ball	12	11	2
40–8200	Switch – Micro	5	27	1
44–7030	Tread – Foot Rest	1	3	2
44–7140–01	Mount – Bearing, Axle	2	2	1
44–9760	Rim	10	2	2
46–2511	Bolt – Axle	10	22	2
46–2511	Bolt – Mounting, Axle	2	19	2
47–1480	Mount – Bearing	10	7	2
47–1490	Bearing	10	13	2
47–1910	Solenoid	5	31	1
47–2964	Hose – Gas	3	9	2
47–2986	Hose – Gas	3	5	1
48–4700	Relay	5	17	1
49–3242	Wheel – Steering	2	34	1
54–9220	Decal – Danger	12	3	1
55–3576	Assembly – Cap, Gas	3	8	1
55–7101	Tower	1	22	1
55–7762	Axle – R.H.	11	1	1
55–7763	Axle – L.H.	11	7	1
55–7770	Cap – End, R.H.	11	3	1
55–7771	Cap – End, L.H.	11	5	1
55–7780	Case – Gear, Transfer	11	4	1
56–2540	Tube – Drain	8	6	1
56–6360	Filter	3	10	1
56–6590	Bolt – Wheel	12	19	2
56–7620	Lever – Shift	7	52	1
56–7710	Hold Down – Battery	8	7	1
56–7720	Post – Hold Down, Battery	8	5	1
56–7730	Spring	7	57	1
56–7740	Spacer	7	58	1
56–7870	Assembly – Wire	8	17	2
56–9870	Pulley – Idler, Deck	6	29	1
56–9960	Differential	10	11	1
56–9960	Differential – Complete	11	*	1
61–9760	Wheel – Deck	12	18	2
61–9780	Cap – Hub	4	1	2
61–9980	Screw – Adjusting	10	20	1
61–9990	Plate – Adjusting	10	4	1
62–3660	Spacer – Bearing	12	13	1
62–3760	Screw – Cap Hex. Hd.	8	16	1
62–4300	Pad – Anti–Skid	8	13	1
63–8360	Key	5	40	2
65–2920	Pad – Pedal	1	17	2
66–6620–03	Support R.H.	10	21	1
66–6630–03	Support L.H.	10	12	1
66–6640	Control – Throttle	5	34	1
66–6680	Seat	3	1	1
66–6920	Pad – Isolator	3	17	2
67–0010–03	Lift W.A. – Front, Deck	2	5	1
67–0050–01	Tube W.A. – Support, Rear	2	11	1
67–0080	Link – H.O.C.	5	23	1
67–0090–03	Bracket – Link, H.O.C.	2	10	1
67–0140	Post – Pivot	12	4	1
67–0231–01	Body W.A. – Rear	5	13	1
67–0270	Handle W.A. – H.O.C.	5	21	1
67–0300–01	Lever W.A. – H.O.C.	2	18	2
67–0330–03	Idler – Plate, Mount	6	30	1
67–0360	Bracket – Arm, Idler	6	27	1
67–0400	Mount – Pivot	6	19	1
67–0410	Spacer – Pivot	6	16	1
67–0420–03	Plate – Mount, Idler	6	18	1
67–0430	Rod – Clutch	2	6	1
67–0440	Spacer – Steering	2	32	1
67–0450–01	Frame W.A. – Front	2	25	1
67–0520–01	Channel – R.H.	2	3	1
67–0530–01	Channel – L.H.	2	24	1
67–0540–03	Tube W.A. – Pivot	6	6	1
67–0570	Rod W.A. – Brake, Deck	12	16	1
67–0600–03	Lever W.A. – Deck Engage	6	45	1
67–0640	Handle – Deck Engage	6	46	1
67–0660	Bracket – Mount, Shifter	7	65	1
67–0670	Bracket – Engage, Deck	7	62	1
67–0690–03	Flat – Deck Engage	6	3	1
67–0710	Ball – Swivel	12	21	1
67–0730	Post – Mount, Brake	12	22	1
67–0740	Spacer – Brake, Deck	12	23	1
67–0750	Bracket – Mount, Spring	6	43	1
67–0790–03	Support W.A. – Seat	5	10	1
67–0800–01	Spindle – R.H.	4	15	1
67–0810–01	Spindle – L.H.	4	12	1
67–0830–03	Shaft W.A. – Steering	2	26	1
67–0850	Bushing – Steering	2	29	2
67–0860	Washer – Steering	2	30	1
67–0870	Bolt – Shoulder	5	22	2
67–0870	Bolt – Shoulder	2	27	2
67–0880	Assembly – Tie Rod	4	11	2
67–0900	Belt – Traction	6	39	1
67–0910	Chain	10	10	1
67–0920	Guide – Belt	8	20	1
67–0920	Guide – Belt	6	35	1
67–0930	Guide R.H. – Belt, Engine	6	8	1
67–0940	Guide L.H. – Belt, Engine	6	14	1
67–0950	Strap – Tank, Gas	3	6	2
67–0962–01	Guard – Chain	8	22	1
67–0970	Hub – Spindle	12	25	1
67–0990	Axle – Front	4	9	1
67–1030	Cover – Panel, Control	5	42	1
67–1070–01	Body W.A. – Front	1	15	1
67–1090–01	Support W.A. – Seat	5	29	1
67–1130–03	Pedal – Brake & Clutch	1	14	2
67–1151	Deflector	12	2	1
67–1241	Base – Seat	3	2	1
67–1270	Decal – Panel, Control	5	39	1
67–1330–03	Lever – Brake, Bellcrank	1	10	1
67–1340	Rod – Brake, Transmission	1	9	1
67–1350	Rod – Front, Brake	1	12	1
67–1370	Assy. – Brake, Deck	12	14	1

*Not Illustrated

TORO PART NUMBER INDEX (Cont.)

Part No.	Description	Pg. No.	Ref. No.	Qty.
67-1390	V-Belt	12	10	1
67-1400	Transmission	7	49	1
67-1430	Spring - Compression	1	7	1
67-1440	Spring - Brake	12	32	1
67-1450	Spring - Extension	1	11	1
67-1460	Washer - Flat	2	15	2
67-1480	Brace - Support, Seat	5	8	2
67-1500-03	Bar - Stand	5	5	1
67-1510-03	Brace - Stop, Deck	2	13	2
67-1530	Assembly - Pin, Clevis	7	70	1
67-1590	Bracket - Brake Return	1	6	1
67-1600-01	Bracket - Deflector	12	39	1
67-9170	Spring	6	31	1
68-3650	Decal - Warning	12	46	1
68-8370	Link - Deck Engage	6	4	1
68-8380	Spacer - Stop, Deck	2	17	2
68-9950	Spring - Traction	6	15	1
71-8310	Spring - Prop, Seat	5	1	1
76-1580-03	Guide - Chain	10	17	2
76-1620	Decal - Instruction	1	1	1
76-3820	Anchor - Guide, Belt	7	75	2
76-3860	Decal	7	77	1
76-3920	Decal - H.O.C./Deck	5	24	1
76-3940-03	Lever W.A. - Shift	7	54	1
76-3970	Spacer - Pivot	7	69	1
76-4010	Sprocket	10	18	1
76-4070	Decal - Danger	12	42	1
76-4080	Decal	2	36	1
76-4090-01	Plate - Engine	6	13	1
76-4660	Spring	7	76	1
80-2600	Battery 12V	8	8	1
80-4330	Prop - Seat	5	32	1
80-4340	Shaft - Spindle	12	27	1
80-4360	Shield - Bearing	12	26	1
80-4380	Spacer - Spindle	12	31	1
80-4450	Cover - Recycler	12	35	1
80-4460	Pulley - Deck	12	8	1
80-4510	Kicker	12	36	4
80-4520	Guide - Belt	12	12	1
80-4530	Blade	12	30	1
80-4540-03	Ring - Deck, Recycler	12	45	4
80-4550	Rod - Base, Seat	5	33	1
80-4560	Spacer	8	11	1
80-4580	Tank - Gas	3	7	1
82-6450	Pulley - Transmission	6	40	1
83-4840	Pulley - Engine	8	14	1
83-6610	Tab - Hold Down	12	47	1
84-8470	Cap - Battery	8	33	6
88-9810-03	Gate - Shift	7	50	1
88-9840	Insert - Wheel, Steering	2	35	1
88-9870	Harness - Wire	9	1	1
88-9930	Switch - Micro	7	63	1
92-7978	Decal - Horsehead	3	18	1
92-7979	Decal - Toro L.H.	5	12	1
92-7980	Decal - Toro R.H.	5	*	1
92-7981	Decal - Toro	1	21	1
92-9522	Decal - Recycler	12	44	1
217-80	Rim	4	5	2
218-461	Nut - Hex.	5	38	1
231-115	Tire	10	1	2
231-116	Tire	4	3	2
232-27	Valve Stem w/Cap	4	17	2
232-27	Valve Stem w/Cap	10	23	2
233-22	Knob	5	25	1
233-22	Knob	7	47	1
233-48	Knob	7	55	1
233-59	Knob	5	35	1
2412-98	Clamp - Hose	3	11	5
256-90	Bushing	6	5	3
256-155	Bushing	6	28	1
2710-11	Link - Connecting	10	9	1
282-27	Clevis	2	7	1
282-27	Clevis	7	71	1
283-67	Pin - Clevis	6	33	1
288-2	Cap - Pipe	8	29	1
289-34	Nipple - Pipe	8	30	1
2811-17	Elbow - Street	8	31	1
2812-1	Reducer	8	32	1
302-5	Fitting - Grease	4	4	4
321-4	Screw - Cap Hex. Hd.	10	8	4
321-4	Screw - Cap Hex. Hd.	8	9	2
321-4	Screw - Cap Hex. Hd.	6	17	2
321-4	Screw - Cap Hex. Hd.	12	38	9
321-8	Screw - Cap Hex. Hd.	7	59	1
321-15	Screw - Cap Hex. Hd.	7	56	1
322-3	Screw - Cap Hex. Hd.	2	1	6
322-3	Screw - Cap Hex. Hd.	5	9	4
322-3	Screw - Cap Hex. Hd.	3	14	4
322-3	Screw - Cap Hex. Hd.	12	20	6
322-3	Screw - Cap Hex. Hd.	6	34	5
322-5	Screw - Cap Hex. Hd.	5	7	4
322-6	Screw - Cap Hex. Hd.	6	11	1
322-6	Screw - Cap Hex. Hd.	12	15	2
322-7	Screw - Cap Hex. Hd.	8	19	3
322-10	Screw - Cap Hex. Hd.	8	21	1
322-10	Screw - Cap Hex. Hd.	6	37	1
322-12	Screw - Cap Hex. Hd.	8	12	1
322-14	Screw - Cap Hex. Hd.	2	23	2
322-22	Screw - Cap Hex. Hd.	11	6	4
322-22	Screw - Cap Hex. Hd.	12	7	1
323-8	Screw - Cap Hex. Hd.	6	26	1
323-10	Screw - Cap Hex. Hd.	2	16	2
323-10	Screw - Cap Hex. Hd.	6	24	1
329-4	Screw - Cap Hex. Hd.	7	53	1
3218-1	Nut - Jam	5	16	2
3218-2	Nut - Jam	7	72	1
3219-6	Nut - Hex.	12	9	1
3230-2	Bolt - Carriage	6	12	1
3230-3	Bolt - Carriage	5	3	2
3230-20	Bolt - Carriage	5	11	1
3230-20	Bolt - Carriage	3	16	6
3231-4	Bolt - Carriage	10	3	2
3231-25	Bolt - Carriage	10	6	4
3234-21	Screw - Cap Hex. Hd.	12	34	1
3245-32	Screw - Set	10	14	4
3253-3	Washer - Lock	7	60	1
3253-4	Washer - Lock	6	36	1
3254-5	Washer - Lock, Int. Tooth	5	37	1
3255-7	Washer - Lock, Int. Tooth	8	1	1
3255-7	Washer - Lock, Int. Tooth	5	15	2
3255-8	Washer - Lock	8	28	4
3256-14	Washer - Flat	5	45	1
3256-22	Washer - Flat	5	4	1
3256-22	Washer - Flat	7	61	5
3256-23	Washer - Flat	8	3	4
3256-23	Washer - Flat	5	6	4
3256-23	Washer - Flat	6	9	3
3256-23	Washer - Flat	3	15	8

*Not Illustrated

TORO PART NUMBER INDEX (Cont.)

Part No.	Description	Pg. No.	Ref. No.	Qty.
3256–23	Washer – Lock	12	6	3
3256–24	Washer – Flat	10	16	4
3256–24	Washer – Flat	6	22	3
3256–25	Washer – Flat	8	15	1
3256–26	Washer – Flat	4	13	1
3256–29	Washer – Flat	2	21	2
3256–55	Washer – Fender	7	48	2
3257–23	Key	6	41	1
3272–6	Pin – Cotter	6	2	1
3272–6	Pin – Cotter	2	9	2
3272–12	Pin – Cotter	4	18	2
3272–23	Pin – Cotter	2	20	2
3274–4	Pin – Cotter	5	43	1
3274–4	Pin – Cotter	6	32	1
3290–134	Screw – Cap Mach. Hd.	5	46	1
3290–250	PIn – Hair, Cotter	2	22	1
3290–250	Pin – Hair, Cotter	1	16	2
3290–313	Screw – Pan Head	5	26	2
3290–347	Nut – U–Type	1	5	4
3290–354	Nut – Double	5	28	1
3290–354	Nut – Double	7	74	1
3290–355	Pin – Hair, Cotter	2	14	2
3290–378	Tie – Cable	3	13	1
3290–413	Washer – Belleville	5	19	7
3290–413	Washer – Belleville	2	28	4
3290–456	Washer – Belleville	7	68	2
3290–465	Washer – Belleville	12	29	1
3290–478	Washer – Belleville	7	64	2
3296–2	Nut – Lock	5	44	1
3296–4	Nut – Lock	4	8	4
3296–8	Nut – Lock	12	5	2
3296–25	Nut – Lock	4	14	1
3296–29	Nut – Lock	1	2	5
3296–29	Nut – Lock	5	2	11
3296–29	Nut – Lock	2	4	16
3296–29	Nut – Lock	6	7	8
3296–29	Nut – Lock	3	12	4
3296–29	Nut – Lock	10	19	6
3296–29	Nut – Lock	12	24	9
3296–29	Nut – Lock	8	24	5
3296–39	Nut – Lock	6	1	2
3296–39	Nut – Lock	2	12	5
3296–39	Nut – Lock	10	15	6
3296–39	Nut – Lock	12	17	2
3296–39	Nut – Lock	5	20	1
3296–42	Nut – Lock	10	5	5
3296–42	Nut – Lock	6	20	5
3296–42	Nut – Lock	5	30	2
3296–42	Nut – Lock	12	41	9
3296–59	Nut – Lock	6	23	1
3296–59	Nut – Lock	12	40	1
32103–14	Nut – Wing	8	4	1
32103–22	Nut – Wing	8	10	2
32104–110	Screw – Cap Hex. Hd.	1	4	4
32109–14	Nut – Wing	12	33	1
32120–64	Ring – Retaining	6	38	1
32121–32	Pin – Roll	2	31	1
32121–78	Pin – Roll	2	33	1
32144–14	Screw – Self Tapping	8	18	2
32144–14	Screw – Wash. Hd., Tap.	7	51	4
32144–26	Screw – Thread Forming	7	73	1
32144–42	Screw – Hex. Hd. Tapping	5	41	4
32144–70	Screw – Hex. Hd. Tapping	6	44	1
32144–111	Screw – Special	12	43	8
32151–48	Ring – Retaining	4	6	2
32151–62	Ring – Retaining	7	67	1
32152–1	Nut – Lock	11	2	4

OPTIONAL EQUIPMENT

Easy Empty Bagging Kit ..... Model No. 79090
Twin Bag Bagger Kit ..... Model No. 79080
Tire Chains ..... Part No. 11–0410
Hi–Sail Blade ..... Part No. 67–0200

*Not Illustrated

PRODUCT CHANGES

In an effort to make improvements available to TORO owners as quickly as possible, minor changes are incorporated into Toro's products from time to time that do not become immediately shown in the Parts Catalog. If such a change has been made in your unit, which is not reflected in your manual, see your TORO Distributor or his Authorized TORO Service Dealer for information and part numbers.

COUNTRIES OTHER THAN THE UNITED STATES OR CANADA

Customers who have purchased TORO products exported from the United States or Canada should contact their Toro Distributor (Dealer) to obtain guarantee policies for your country, province or state. If for any reason you are dissatisfied with your Distributor's service or have difficulty obtaining guarantee information, contact the TORO importer. If all other remedies fail, you may contact us at The Toro Company.

MAINTENANCE RECORD

Date								

Compliance with Radio Interference Regulations Certified.
Certifie Conforme au Reglement sur le Brouillage Radioelectrique.

Litho in U.S.A.

MAINTENANCE RECORD

Date								

MAINTENANCE RECORD

Date								