Form No. 3362-529 Rev A

TORO®

Count on it.

Parts Catalog

Striping Kit

GrandStand® Mower

Model No. 114-3521

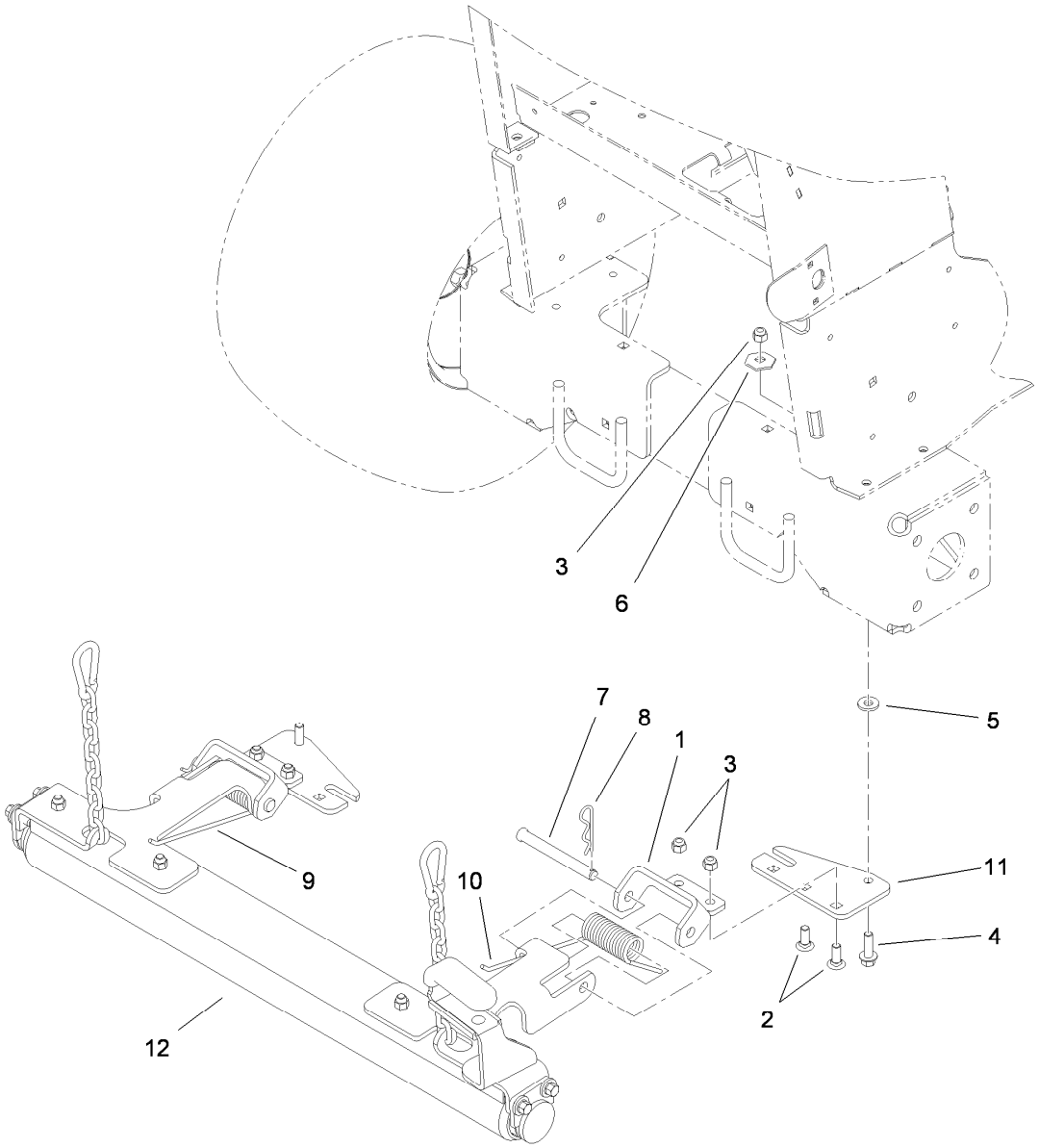

Roller Striper Assembly No. 114-3521

Ref.	*Part Number*	*Qty.*	*Description*
1	114-3518-03	2	Bracket-Mount, Striper
2	3231-22	4	Screw-CARR
3	3296-39	6	Nut-Lock, NI
4	3234-24	2	Screw-HHF
5	9202414	2	Washer-Spacer
6	3290-224	2	Lockwasher-Pyramid
7	283-83	2	Pin-Clevis
8	3290-355	2	Pin-Hair
9	108-4076	1	Spring-Torsion
10	108-4075	1	Spring-Torsion
11	117-9642-03	2	Plate-Hinge
12	119-0366	1	Roller ASM

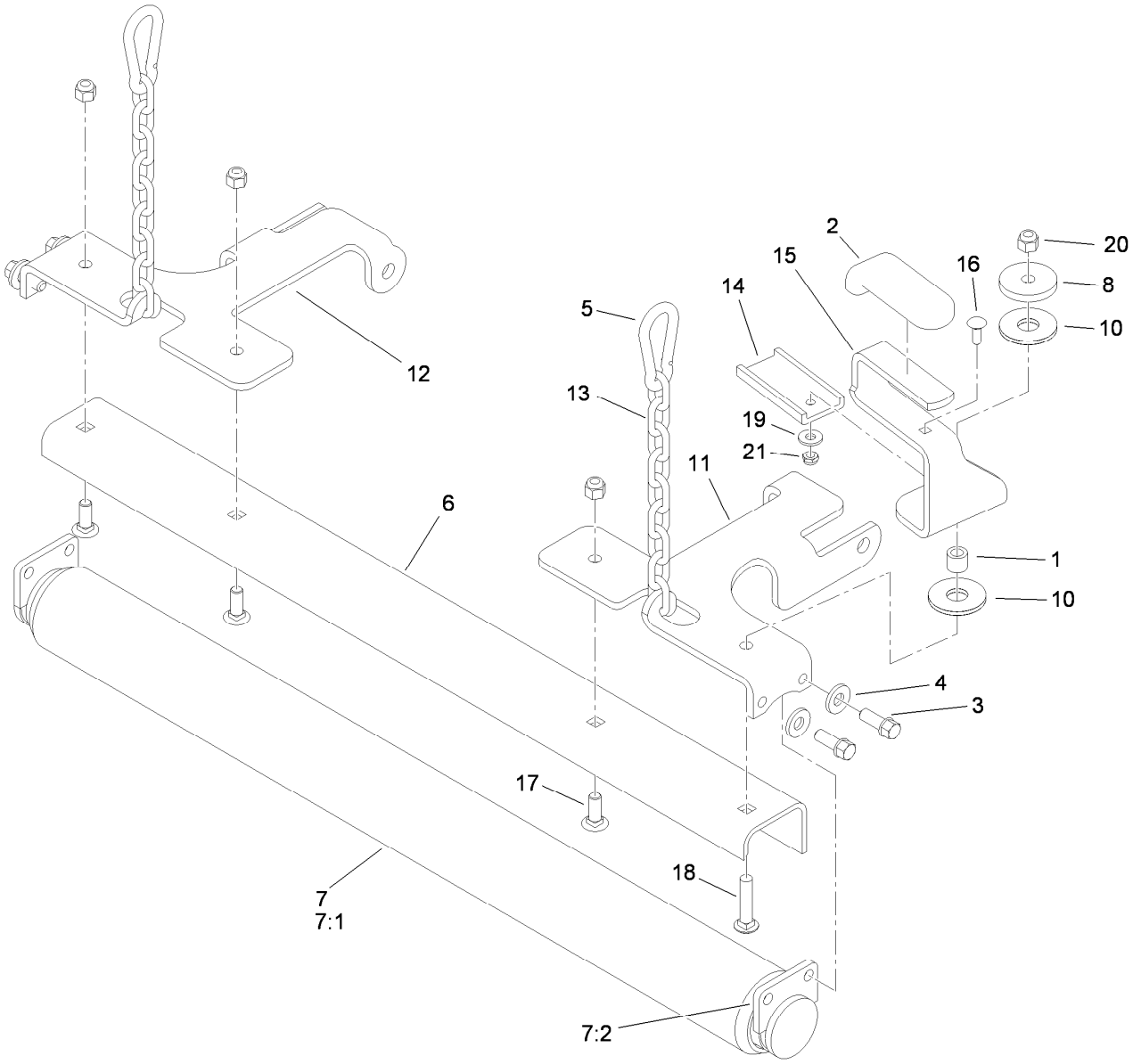

Roller Assembly No. 119-0366

Ref.	Part Number	Qty.	Description
1	117-9700	1	Spacer
2	1-633268	1	Grip-Lever, Brake
3	92-1624	4	Screw-HWH
4	98-5975	4	Washer-Belleville
5	107-1507	2	Link-Snap
6	108-2154-03	1	Scraper-Roller
7	108-2199	1	Roller ASM
7:1	108-2157	1	Roller-Striper
7:2	108-2198	2	Hub ASM
8	110-9981	1	Washer-Plain
10	114-0463	2	Washer-Friction, Composite
11	114-3519-03	1	Mount-Roller, RH
12	114-3520-03	1	Mount-Roller, LH
13	117-9628	2	Chain-Link, Straight
14	117-9667	1	Slide-Plastic
15	117-9681-03	1	Lever-Roller
16	3229-1	1	Screw-CARR
17	3231-22	3	Screw-CARR
18	3231-5	1	Screw-CARR
19	3256-2	1	Washer-Flat
20	3296-39	4	Nut-Lock, NI
21	3296-56	1	Nut-Lock, NI



Count on it.