Form No. 3362-550 Rev A

Power Clear™ Snowthrower

Model No. 38588—Serial No. 310000001 and Up
Model No. 38589—Serial No. 310000001 and Up

Operator's Manual

Introduction

This snowthrower is intended to be used by residential homeowners or professional, hired operators. It is designed primarily for removing snow from paved surfaces, such as driveways and sidewalks, and other surfaces for traffic on residential or commercial properties. It is not designed for removing materials other than snow, nor is it designed for clearing off gravel surfaces.

Read this information carefully to learn how to operate and maintain your product properly and to avoid injury and product damage. You are responsible for operating the product properly and safely.

You may contact Toro directly at www.Toro.com for product and accessory information, help finding a dealer, or to register your product.

Whenever you need service, genuine Toro parts, or additional information, contact an Authorized Service Dealer or Toro Customer Service and have the model and serial numbers of your product ready. Figure 1 identifies the location of the model and serial numbers on the product. Write the numbers in the space provided.

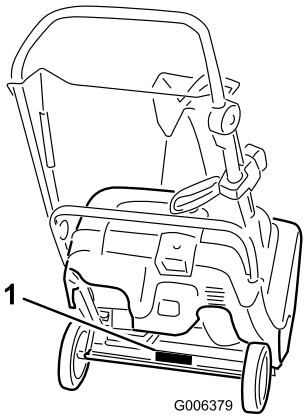

Figure 1

1. Model and serial number location

Model No. _____

Serial No. _____

This manual identifies potential hazards and has safety messages identified by the safety alert symbol (Figure 2), which signals a hazard that may cause serious injury or death if you do not follow the recommended precautions.



Figure 2

1. Safety alert symbol

This manual uses 2 words to highlight information. **Important** calls attention to special mechanical information and **Note** emphasizes general information worthy of special attention.

Safety

This snowthrower meets or exceeds the B71.3 specifications of the American National Standards Institute in effect at the time of production.

Read and understand the contents of this manual before you start the engine.

⚠This is the safety alert symbol. It is used to alert you to potential personal injury hazards. Obey all safety messages that follow this symbol to avoid possible injury or death.

Improperly using or maintaining this snowthrower could result in injury or death. To reduce this potential, comply with the following safety instructions.

This snowthrower is capable of amputating hands and feet and of throwing objects. Failure to observe the following safety instructions could result in serious injury.

© 2009—The Toro® Company
8111 Lyndale Avenue South
Bloomington, MN 55420

Register at www.Toro.com.

Original Instructions (EN)
Printed in the USA
All Rights Reserved

Training

- Read, understand, and follow all instructions on the machine and in the manual(s) before operating this unit. Be thoroughly familiar with the controls and the proper use of the equipment. Know how to stop the unit and disengage the controls quickly.
- Never allow children to operate the equipment. Never allow adults to operate the equipment without proper instruction.
- Keep the area of operation clear of all persons, particularly small children.
- Exercise caution to avoid slipping or falling.

Preparation

- Thoroughly inspect the area where the equipment is to be used and remove all doormats, sleds, boards, wires, and other foreign objects.
- Do not operate the equipment without wearing adequate winter garments. Avoid loose fitting clothing that can get caught in moving parts. Wear footwear that will improve footing on slippery surfaces.
- Handle fuel with care; it is highly flammable.
  - Use an approved fuel container.
  - Never add fuel to a running engine or hot engine.
  - Fill fuel tank outdoors with extreme care. Never fill fuel tank indoors.
  - Never fill containers inside a vehicle or on a truck or trailer bed with a plastic liner. Always place containers on the ground, away from your vehicle, before filling.
  - When practical, remove gas-powered equipment from the truck or trailer and refuel it on the ground. If this is not possible, then refuel such equipment on a trailer with a portable container, rather than from a gasoline dispenser nozzle.
  - Keep the nozzle in contact with the rim of the fuel tank or container opening at all times, until refueling is complete. Do not use a nozzle lock-open device.
  - Replace gasoline cap securely and wipe up spilled fuel.
  - If fuel is spilled on clothing, change clothing immediately.
- Use extension cords and receptacles as specified by the manufacturer for all units with electric starting motors.
- Do not attempt to clear snow from a gravel or crushed rock surface. This product is intended for use only on paved surfaces.
- Never attempt to make any adjustments while the engine is running (except when specifically recommended by manufacturer).
- Always wear safety glasses or eye shields during operation or while performing an adjustment or repair to protect eyes from foreign objects that may be thrown from the machine.

Operation

- Do not put hands or feet near or under rotating parts. Keep clear of the discharge opening at all times.
- Exercise extreme caution when operating on or crossing gravel drives, walks, or roads. Stay alert for hidden hazards or traffic.
- After striking a foreign object, stop the engine, remove the ignition key, thoroughly inspect the snow thrower for any damage, and repair the damage before restarting and operating the snow thrower.
- If the unit should start to vibrate abnormally, stop the engine and check immediately for the cause. Vibration is generally a warning of trouble.
- Stop the engine whenever you leave the operating position, before unclogging the rotor blade housing or discharge chute, and when making any repairs, adjustments or inspections.
- When cleaning, repairing, or inspecting the snow thrower, stop the engine and make certain that the rotor blades and all moving parts have stopped.
- Do not run the engine indoors, except when starting the engine and for transporting the snow thrower in or out of the building. Open the outside doors; exhaust fumes are dangerous.
- Exercise extreme caution when operating on slopes.
- Never operate the snow thrower without proper guards and other safety protective devices in place and working.
- Never direct the discharge toward people or areas where property damage can occur. Keep children and others away.
- Do not overload the machine capacity by attempting to clear snow at too fast a rate.
- Look behind and use care when backing up with the snow thrower.

- Disengage power to the rotor blades when snow thrower is transported or not in use.
- Never operate the snow thrower without good visibility or light. Always be sure of your footing, and keep a firm hold on the handles. Walk; never run.
- Never touch a hot engine or muffler.

Clearing a Clogged Discharge Chute

Hand contact with the rotating rotor blades inside the discharge chute is the most common cause of injury associated with snow throwers. Never use your hand to clean out the discharge chute.

To clear the chute:

- **Shut the engine off!**
- Wait 10 seconds to be sure the rotor blades have stopped rotating.
- Always use a clean-out tool, not your hands.

Maintenance and Storage

- Check all fasteners at frequent intervals for proper tightness to be sure the equipment is in safe working condition.
- Never store the machine with fuel in the fuel tank inside a building where ignition sources are present, such as hot water heaters, space heaters, or clothes dryers. Allow the engine to cool before storing in any enclosure.
- Always refer to the *Operator's Manual* for important details if the snow thrower is to be stored for an extended period.
- Maintain or replace safety and instruction labels, as necessary.
- Run the machine a few minutes after throwing snow to prevent freeze-up of the rotor blades.

Toro Snowthrower Safety

The following list contains safety information specific to Toro products or other safety information that you must know.

- **Rotating rotor blades can injure fingers or hands.** Stay behind the handles and away from the discharge opening while operating the snowthrower. **Keep your face, hands, feet, and any other part of your body or clothing away from moving or rotating parts.**
- Before adjusting, cleaning, repairing, and inspecting the snowthrower, and before unclogging the discharge chute, **stop the engine, remove the key, and wait for all moving parts to stop.**
- **Before** leaving the operating position, stop the engine, remove the ignition key, and wait for all moving parts to stop.
- If a shield, safety device, or decal is damaged, illegible, or lost, repair or replace it before beginning operation. Also, tighten any loose fasteners.
- **Do not** smoke while handling gasoline.
- **Do not** use the snowthrower on a roof.
- Do not touch the engine while it is running or soon after it has stopped because the engine may be hot enough to cause a burn.
- Perform only those maintenance instructions described in this manual. Before performing any maintenance, service, or adjustment, stop the engine and remove the key. If major repairs are ever needed, contact an Authorized Service Dealer.
- Do not change the governor settings on the engine.
- When storing the snowthrower for more than 30 days, drain the fuel from the fuel tank to prevent a potential hazard. Store fuel in an approved fuel container. Remove the key from the ignition switch before storing the snowthrower.
- Purchase only genuine Toro replacement parts and accessories.

Safety and Instructional Decals

Important: **Safety and instruction decals are located near areas of potential danger. Replace damaged decals.**

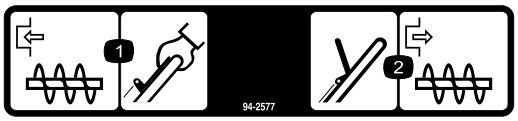

94-2577

1. To engage the rotor blades, hold the control bar against the handle.
2. To disengage the rotor blades, release the control bar.

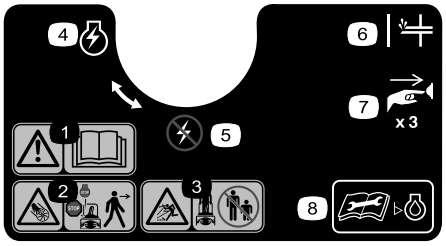

108-4930 (Model 38588 only)

1. Warning—read the *Operator's Manual.*
2. Cutting/dismemberment hazard, rotor blades—stop the engine before leaving the machine.
3. Thrown object hazard—keep bystanders a safe distance from the machine.
4. Engine switch On
5. Engine switch Off
6. Primer
7. Push the primer three times to prime the engine.
8. Read the *Operator's Manual* before checking engine oil level.

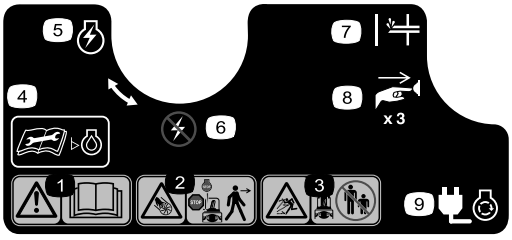

114-3753 (Model 38589 only)

1. Warning—read the *Operator's Manual.*
2. Cutting/dismemberment hazard, rotor blades—stop the engine before leaving the machine.
3. Thrown object hazard—keep bystanders a safe distance from the machine.
4. Read the *Operator's Manual* before checking engine oil level.
5. Engine switch On
6. Engine switch Off
7. Primer
8. Push the primer three times to prime the engine.
9. Plug the machine in to power the electric starter.

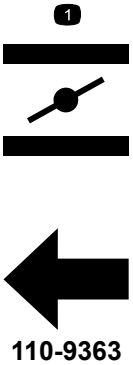

110-9363

1. Choke

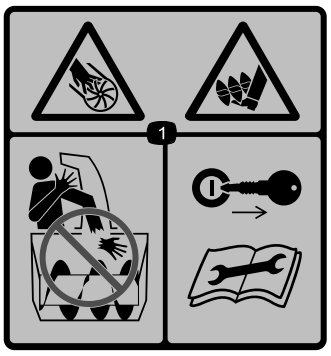

114-1712

Order part no. 114-1711

1. Cutting dismemberment, impeller and cutting dismemberment, auger hazards—do not place your hand in the chute; remove the ignition key and read the instructions before servicing or performing maintenance.

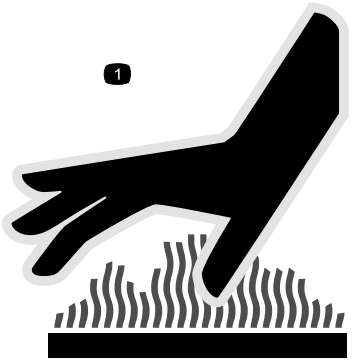

114-3794

1. Hot surface (on exhaust baffle)

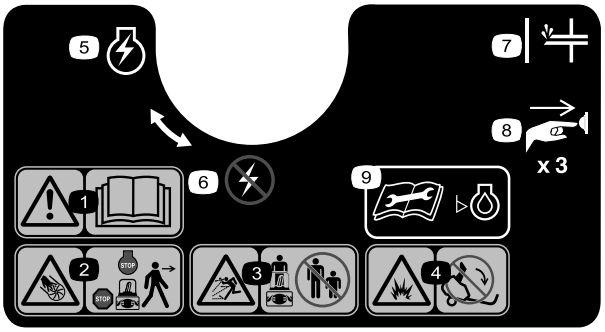

117-9102

Order part no. 117-6036

1. Warning—read the *Operator's Manual.*
2. Cutting/dismemberment hazard, impeller—stop the engine before leaving the machine.
3. Thrown object hazard—keep bystanders a safe distance from the machine.
4. Fuel spill hazard—do not tip machine backward.
5. Engine switch On
6. Engine switch Off
7. Primer
8. Push the primer three times to prime the engine.
9. Read the *Operator's Manual* before checking engine oil level.

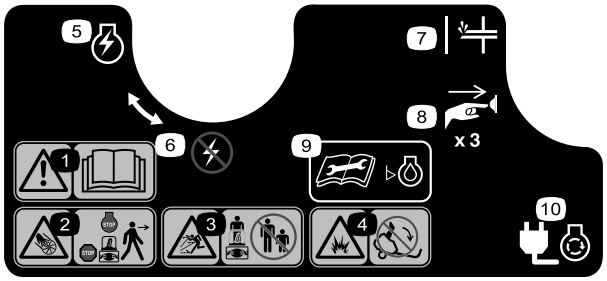

117-9103

Order part no. 117-6046

1. Warning—read the *Operator's Manual.*
2. Cutting/dismemberment hazard, impeller—stop the engine before leaving the machine.
3. Thrown object hazard—keep bystanders a safe distance from the machine.
4. Fuel spill hazard—do not tip machine backward.
5. Engine switch On
6. Engine switch Off
7. Primer
8. Push the primer three times to prime the engine.
9. Read the *Operator's Manual* before checking engine oil level.
10. Plug the machine in to power the electric starter.

Setup

Loose Parts

Use the chart below to verify that all parts have been shipped.

Procedure	Description	Qty.	Use
1.	No parts required	–	Unfold the handle.
2.	Screws Chute assembly	3 1	Install the discharge chute.

1. Unfolding the Handle

Procedure

1. Loosen the handle knobs, pull out the "U"-shaped handle locks until you can move the handle freely, and rotate the handle to the operating position (Figure 3).

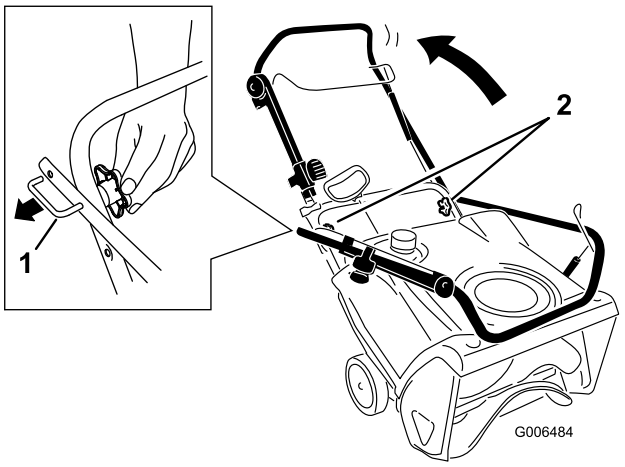

Figure 3

1. "U"-shaped handle lock (2) 2. Handle knobs

2. Insert the end of the "U"-shaped handle lock into the open hole in the handle and tighten the handle knobs until they are snug (Figure 4).

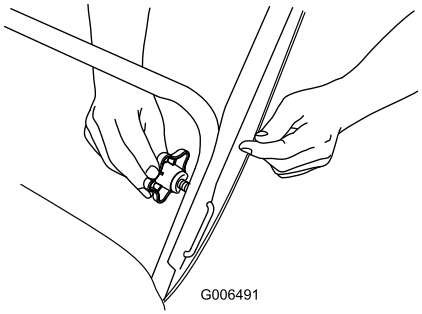

Figure 4

Important: Ensure that you do not pinch or kink the control cable or the Quick Shoot™ cables (Figure 5).

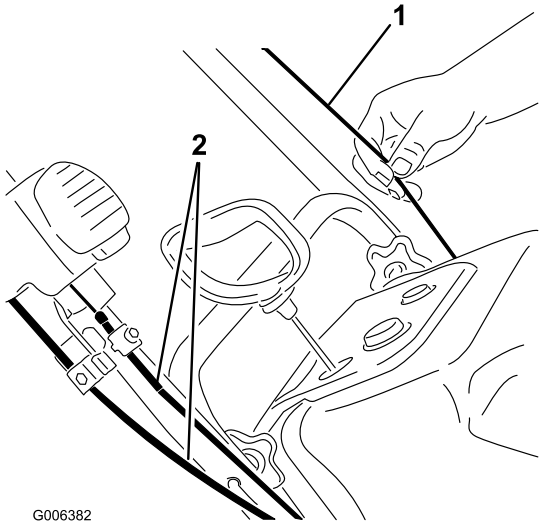

Figure 5

1. Control cable 2. Quick Shoot™ cables

2. Installing the Discharge Chute

3	Screws
1	Chute assembly

Procedure

Install the discharge chute as shown (Figure 6).

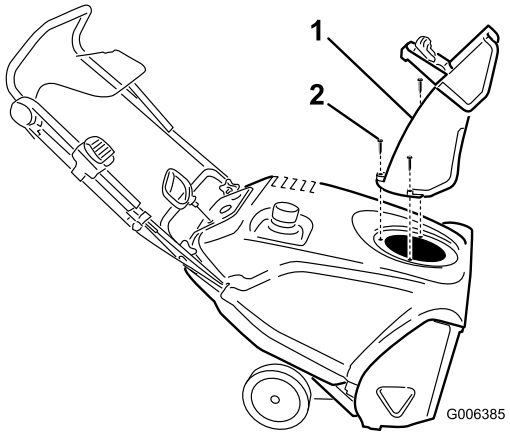

Figure 6

1. Discharge chute 2. Screw (3)

Note: For easier installation, use a small ratchet wrench to tighten the screws.

Important: Do not overtighten the screws; otherwise you may damage the discharge chute and prevent it from turning freely.

3. Filling the Engine with Oil

Procedure

Your snowthrower does not come with oil in the engine, but it does come with a bottle of oil.

Important: Before starting the engine, fill the engine with oil.

Note: The bottle of oil may contain more than is required. Do not overfill the engine.

Max fill: 20 oz. (0.6 l), type: automotive detergent oil with an API service classification of SJ, SL, or higher.

Use Figure 7 below to select the best oil viscosity for the outdoor temperature range expected:

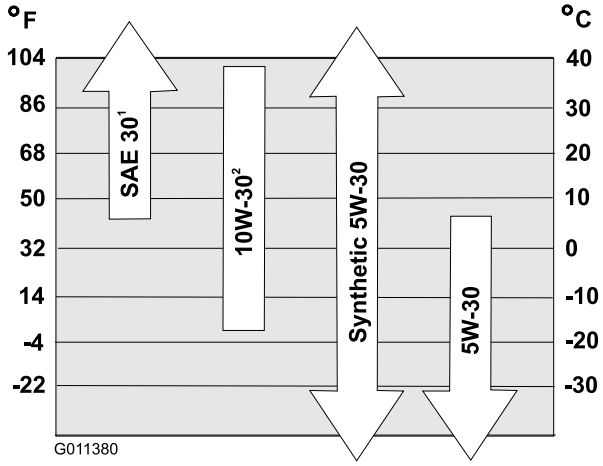

Figure 7

1. Using SAE 30 at outdoor temperatures below 40°F (4°C) will result in hard starting.
2. Using 10W-30 at outdoor temperatures above 80°F (27°C) may result in increased oil consumption; therefore, check the oil level more frequently in these circumstances.

Note: 0W30 synthetic oil is acceptable for use in cold temperatures.

1. Move the snowthrower to a level surface.
2. Clean around the oil fill cap (Figure 8).

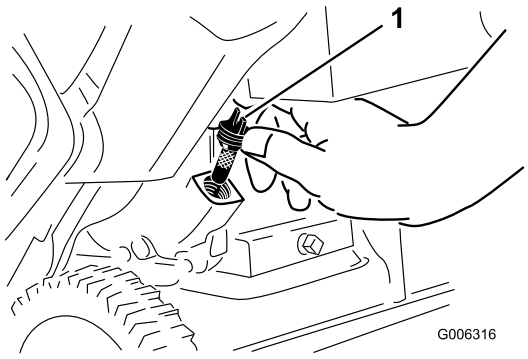

Figure 8

1. Oil fill cap

---

3. Unscrew the oil fill cap and remove it.
4. With the snowthrower in the operating position, **carefully** pour oil into the crankcase until the point of overflow.
5. Screw the oil fill cap into the oil fill hole and tighten it securely.

4. Adjusting the Control Cable

Procedure

Refer to Adjusting the Control Cable in Maintenance.

Product Overview

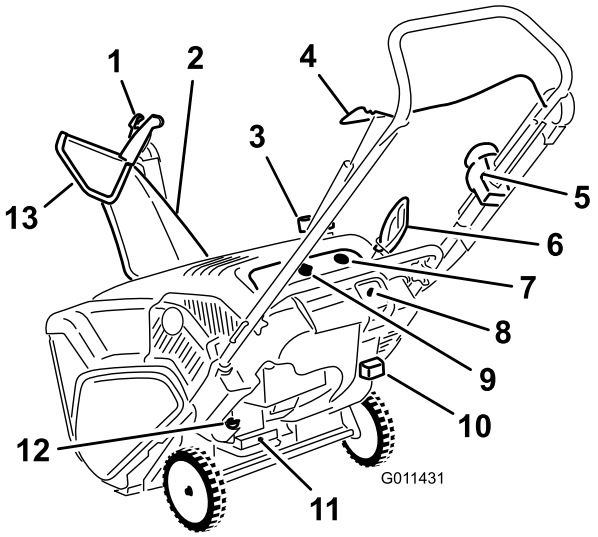

Figure 9

1. Chute deflector trigger
2. Discharge chute
3. Fuel tank cap
4. Control bar
5. Quick Shoot™ control
6. Recoil start handle
7. Primer
8. Electric-start button (model 38589 only)
9. Ignition key
10. Choke lever
11. Oil drain plug
12. Oil fill cap
13. Chute deflector

Operation

Note: Determine the left and right sides of the machine from the normal operating position.

Gasoline is extremely flammable and explosive. A fire or explosion from gasoline can burn you and others.

- **To prevent a static charge from igniting the gasoline, place the container and/or snowthrower on the ground before filling, not in a vehicle or on an object.**
- **Fill the tank outdoors when the engine is cold. Wipe up spills.**
- **Do not handle gasoline when smoking or around an open flame or sparks.**
- **Store gasoline in an approved fuel container, out of the reach of children.**
- **Do not tip the snowthrower backward with fuel in the fuel tank; otherwise, fuel may leak out of the snowthrower.**

Filling the Fuel Tank

Fill the fuel tank with fresh unleaded gasoline having an octane rating at or near 87 from a major name-brand service station (Figure 10).

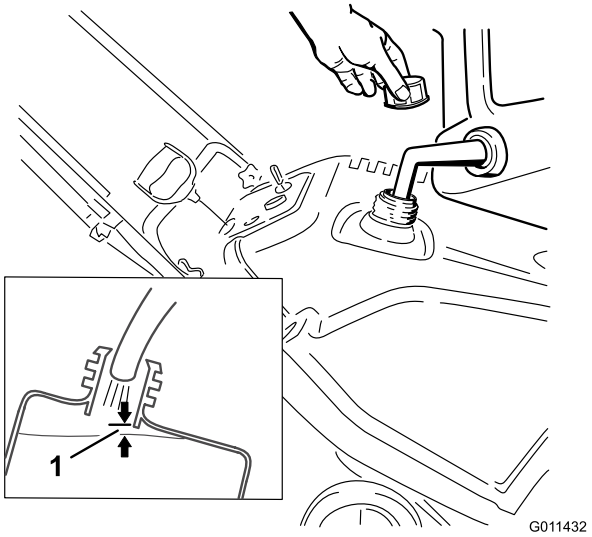

Figure 10

1. 1/4 inch (6 mm)

Important: Do not add oil to the gasoline.

Important: Do not use E85 or E20 fuel. Alternative fuels with high alcohol content can cause hard starting, poor engine performance, and may cause internal engine damage.

Note: For best results, purchase only the quantity of gasoline that you expect to use in 30 days. Otherwise, you may add fuel stabilizer to newly purchased gasoline to keep it fresh for up to 6 months.

Checking the Engine Oil Level

Service Interval: Before each use or daily—Check the engine oil level and add oil if necessary.

1. Move the snowthrower to a level surface.
2. Clean around the oil fill cap (Figure 11).

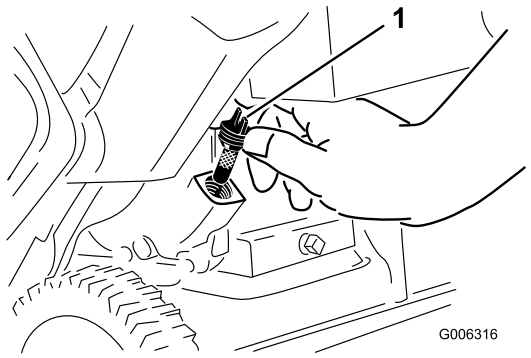

Figure 11

1. Oil fill cap

3. Unscrew the oil fill cap and remove it.
4. If the oil level is low, keep the snowthrower in the operating position and **carefully** pour oil into the crankcase until the point of overflow. (Max. fill: 20 oz. (0.6 l), type: SAE 30 detergent oil with an API service classification of SJ, SL, or higher.)
5. Screw the oil fill cap into the oil fill hole and hand tighten it securely.

Starting the Engine

1. Turn the ignition key clockwise to the On position (Figure 12).

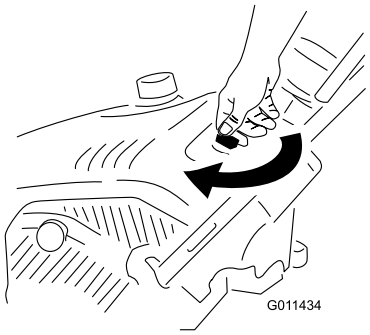

Figure 12

2. Pull out the choke lever (Figure 13).

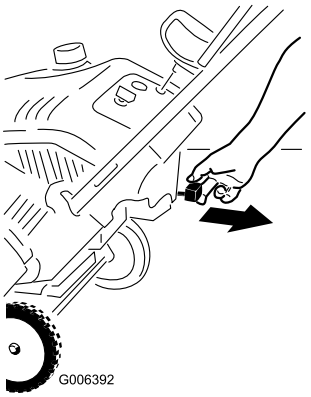

Figure 13

1. Choke lever

3. Firmly push in the primer 3 times with your thumb, holding the primer in a for a second before releasing it each time (Figure 14).

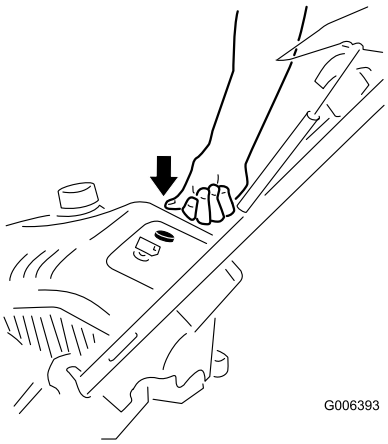

Figure 14

Note: Remove your glove when you push in the primer so that air cannot escape from the primer hole.

Important: Do not use the primer or the choke if the engine has been running and is hot. Excessive priming may flood the engine and prevent it from starting.

4. Connect an extension cord to a power source and the snowthrower, and push the electric-start button (model 38589 only) (Figure 15), or pull the recoil start handle (Figure 16).

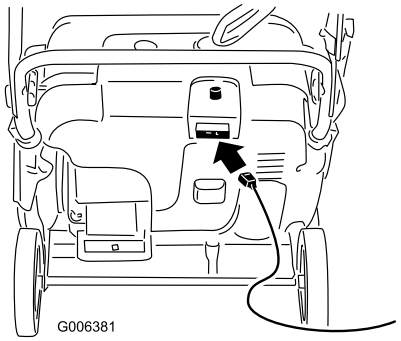

Figure 15

Note: Use only a UL-listed, 16-gauge extension cord recommended for outdoor use that is not longer than 50 feet (15 m).

The electrical cord can become damaged, causing a shock or fire.

Thoroughly inspect the electrical cord before plugging it into a power source. If the cord is damaged, do not use it to start the snowthrower. Replace or repair the damaged cord immediately. Contact an Authorized Service Dealer for assistance.

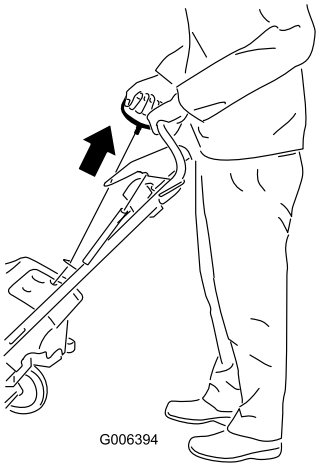

Figure 16

Important: Run the electric starter no more than 10 times at intervals of 5 seconds on, then 5 seconds off. Running the electric starter extensively can overheat and damage it. If the engine does not start after this series of attempts, wait at least 40 minutes to allow the starter to cool before attempting to start it again. If the engine does not start after the second series of attempts, take the snowthrower to an Authorized Service Dealer for service (model 38589 only).

Note: If you pull the recoil handle and feel no resistance, the starter may be frozen. Thaw out the starter before attempting to start the snowthrower.

5. While the engine is running, push in the choke lever slowly.
6. Unplug the extension cord from the power source and the snowthrower (model 38589 only).

If you leave the snowthrower plugged into a power source, someone can inadvertently start the snowthrower and injure people or damage property (model 38589 only).

Unplug the power cord whenever you are not starting the snowthrower.

Engaging the Rotor Blades

To engage the rotor blades, hold the control bar against the handle (Figure 17).

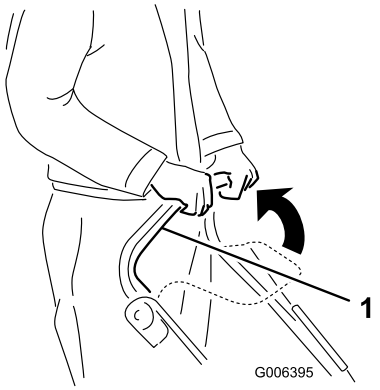

Figure 17

1. Control bar

Disengaging the Rotor Blades

To disengage the rotor blades, release the control bar (Figure 18).

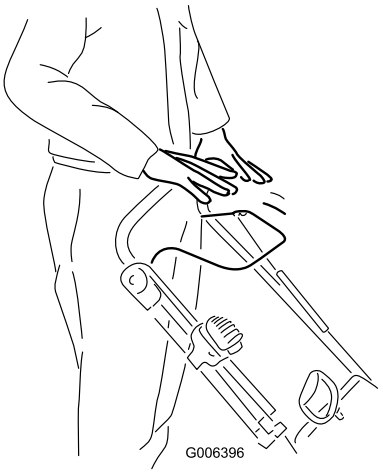

Figure 18

Stopping the Engine

To stop the engine, turn the ignition key counterclockwise to the Off position (Figure 19).

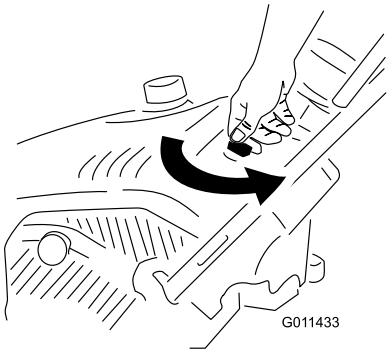

Figure 19

Adjusting the Discharge Chute and Chute Deflector

To adjust the discharge chute, press the trigger of the Quick Shoot™ control on the right hand side of the handle and move it up or down along the handle. Moving the control down the handle rotates the discharge chute to the left; moving the control up the handle rotates the discharge chute to the right (Figure 20).

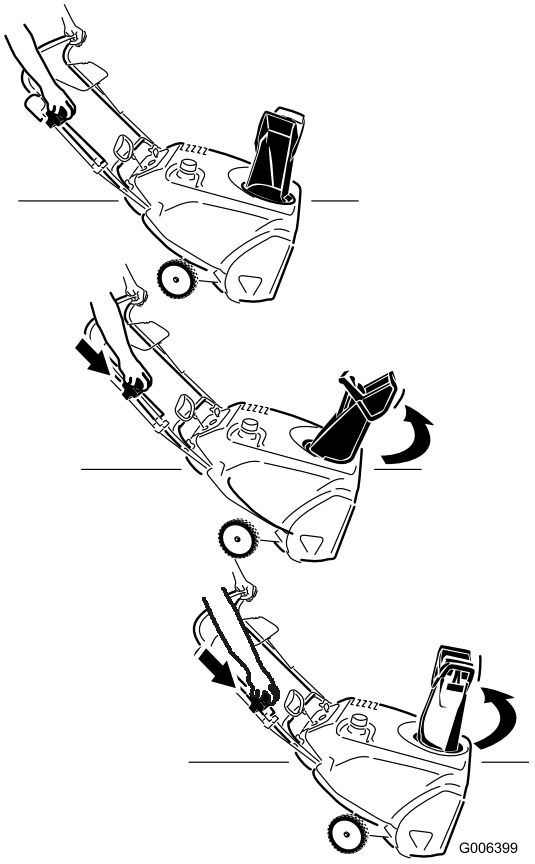

Figure 20

To raise or lower the angle of the chute deflector, press the trigger on the chute deflector and move the chute deflector up or down (Figure 21).

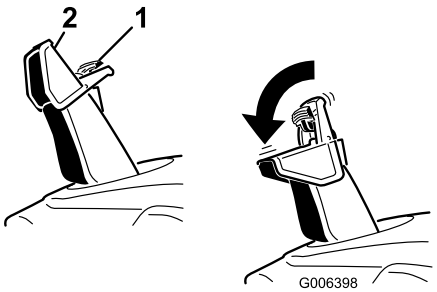

Figure 21

1. Chute deflector trigger
2. Chute deflector

Clearing a Clogged Discharge Chute

Important: Hand contact with the rotating rotor blades inside the discharge chute is the most common cause of injury associated with snow throwers. Never use your hand to clean out the discharge chute.

To clear the chute:

- **Shut the engine off!**
- Wait 10 seconds to be sure the rotor blades have stopped rotating.
- Always use a clean-out tool, not your hands (Figure 22).

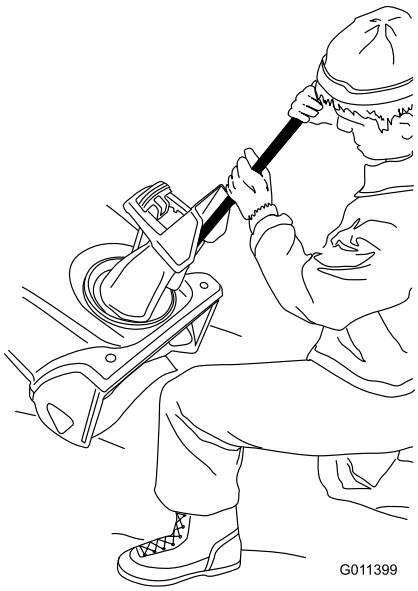

Figure 22

Preventing Freeze-up after Use

- Let the engine run for a few minutes to prevent moving parts from freezing. Stop the engine, wait for all moving parts to stop, and remove ice and snow from the snowthrower.
- Clean off any snow and ice from the base of the chute.
- Rotate the discharge chute left and right to free it from any ice buildup.
- With the ignition key in the Off position, pull the recoil starter handle several times or connect the electrical cord to a power source and the snowthrower and push the electric start button once (model 38589 only) to prevent the recoil starter and/or the electric starter from freezing up.
- In snowy and cold conditions, some controls and moving parts may freeze. Do not use excessive force when trying to operate frozen controls. If you have difficulty operating any control or part, start the engine and let it run for a few minutes.

Operating Tips

The rotor blades can throw stones, toys, and other foreign objects and cause serious personal injury to the operator or to bystanders.

- **Keep the area to be cleared free of all objects that the rotor blades could pick up and throw.**
- **Keep all children and pets away from the area of operation.**

- Remove the snow as soon as possible after it falls.
- If the snowthrower does not propel itself forward on slippery surfaces or in heavy snow, push forward on the handle, but allow the snowthrower to work at its own pace.
- Overlap each swath to ensure complete snow removal.
- Discharge the snow downwind whenever possible.

Maintenance

Note: Determine the left and right sides of the machine from the normal operating position.

Recommended Maintenance Schedule(s)

Maintenance Service Interval	Maintenance Procedure
After the first hour	• Check the control cable and adjust it if necessary. • Check for loose fasteners and tighten them if necessary.
After the first 2 hours	• Change the engine oil.
Before each use or daily	• Check the engine oil level and add oil if necessary.
Yearly	• Check the control cable and adjust it if necessary. • Inspect the rotor blades and have an Authorized Service Dealer replace the rotor blades and scraper if necessary. • Change the engine oil. • Service the spark plug and replace it if necessary. • Check for loose fasteners and tighten them if necessary. • Have an Authorized Service Dealer inspect the drive belt and replace it if necessary.
Yearly or before storage	• Prepare the snowthrower for storage.

Adjusting the Control Cable

Checking the Control Cable

Service Interval: After the first hour—Check the control cable and adjust it if necessary.

Yearly—Check the control cable and adjust it if necessary.

Move the control bar back toward the handle to remove the slack in the control cable (Figure 23).

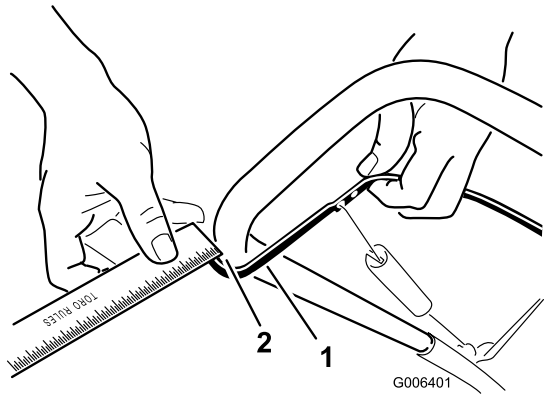

Figure 23

1. Control bar
2. 1/16-inch to 1/8-inch (2 mm to 3 mm) gap

Note: Ensure that a 1/16-inch to 1/8-inch (2 mm to 3 mm) gap exists between the control bar and the handle (Figure 23).

Important: The control cable must contain some slack when you disengage the control bar for the rotor blades to stop properly.

Adjusting the Control Cable

1. Slide up the spring cover and unhook the spring from the adjuster link (Figure 24).

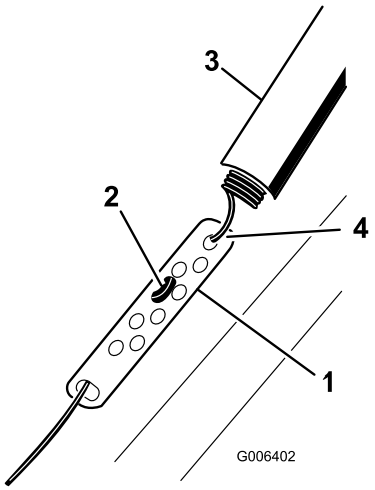

Figure 24

1. Adjuster link
2. Z-fitting
3. Spring cover
4. Unhook the spring here.

Note: You can pull up the adjuster link and cable to make unhooking the spring easier.

2. Move the Z-fitting to a higher or lower hole on the adjuster link as needed to obtain the 1/16-inch to

1/8-inch (2 mm to 3 mm) gap between the control bar and the handle (Figure 23).

Note: Moving the Z-fitting higher decreases the gap between the control bar and the handle; moving it lower increases the gap.

3. Hook the spring to the adjuster link and slide the spring cover over the adjuster link.
4. Check the adjustment; refer to Checking the Control Cable.

Note: After extended use, the drive belt may wear and lose its proper belt tension. If the drive belt slips (continuously squeals) under a heavy load, disconnect the spring from the adjustor link and move the upper end of the spring to the hole that is further from the pivot point in the control bar (Figure 25). Then connect the spring to the adjustor link and adjust the control cable.

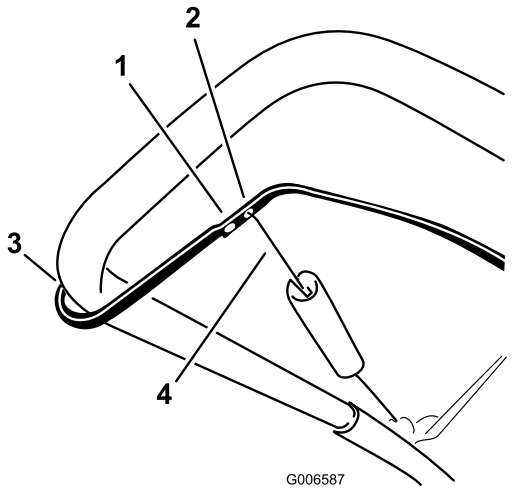

Figure 25

1. Remove the upper end of spring from this hole
2. Insert the upper end of spring into this hole
3. Pivot point
4. Upper end of spring

Note: The belt may slip (squeal) in wet conditions; to dry out the drive system, start the rotor and run it without a load for 30 seconds.

Inspecting the Rotor Blades

Service Interval: Yearly—Inspect the rotor blades and have an Authorized Service Dealer replace the rotor blades and scraper if necessary.

Before each session, inspect the rotor blades for wear. When a rotor blade edge has worn down to the wear indicator hole, have an Authorized Service Dealer replace the rotor blades and the scraper (Figure 26).

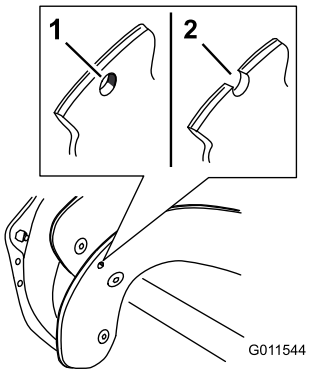

Figure 26

1. The wear indicator hole is intact; you do not need to replace the rotor blades.
2. The wear indicator hole is exposed; replace the rotor blades.

Changing the Engine Oil

Service Interval: After the first 2 hours

Yearly

Run the engine a few minutes before changing the oil to warm it. Warm oil flows better and carries more contaminants.

1. Siphon the fuel from the fuel tank into an approved fuel container, or run the engine until it stops.
2. Move the snowthrower to a level surface.
3. Place an oil drain pan under the oil drain plug, remove the oil drain plug, and tip the snowthrower backward and drain the used oil in the oil drain pan Figure 27).

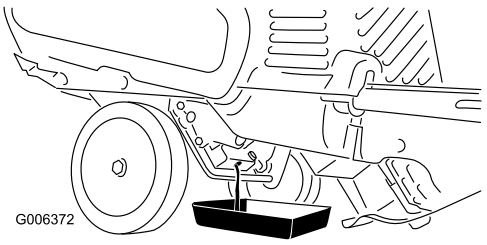

Figure 27

4. After draining the used oil, return the snowthrower to the operating position.
5. Install the oil drain plug and tighten it securely.
6. Clean around the oil fill cap (Figure 28).

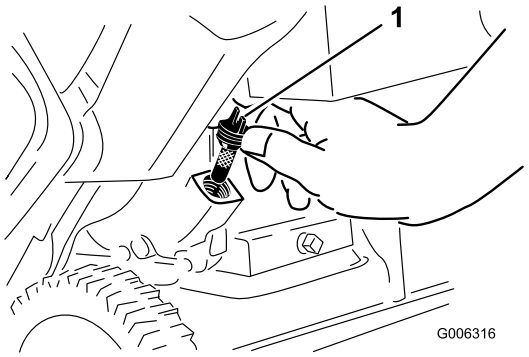

Figure 28

1. Oil fill cap

7. Unscrew the oil fill cap and remove it (Figure 28).
8. With the snowthrower in the operating position, **carefully** pour oil into the oil fill hole to the point of overflow (Figure 30).

   Max fill: 20 oz. (0.6 l), type: automotive detergent oil with an API service classification of SJ, SL, or higher.

   Use Figure 29 below to select the best oil viscosity for the outdoor temperature range expected:

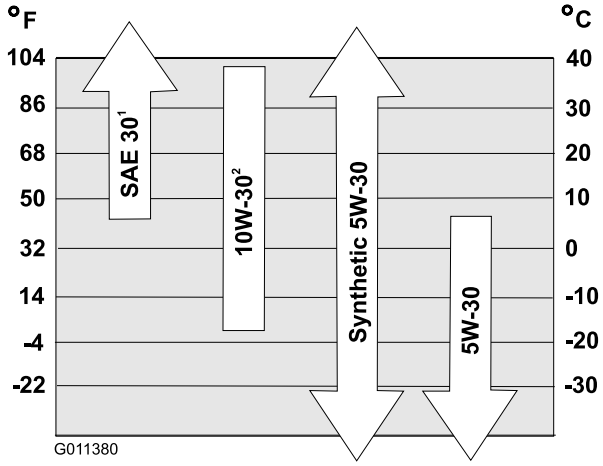

Figure 29

1. Using SAE 30 at outdoor temperatures below 40°F (4°C) will result in hard starting.
2. Using 10W-30 at outdoor temperatures above 80°F (27°C) may result in increased oil consumption; therefore, check the oil level more frequently in these circumstances.

Note: 0W30 synthetic oil is acceptable for use in cold temperatures.

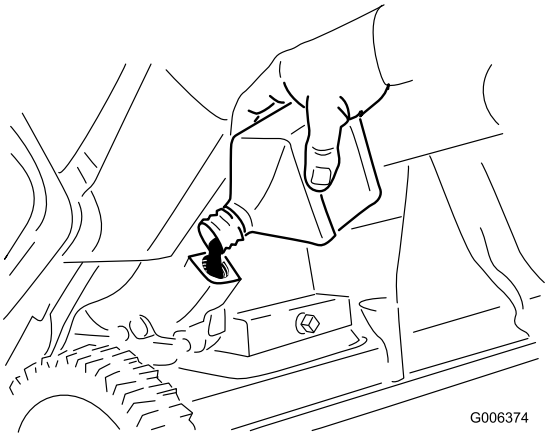

Figure 30

9. Screw the oil fill cap into the oil fill hole, and hand tighten it securely.
10. Wipe up any spilled oil.
11. Dispose of the used oil properly at a local recycling center.

Servicing the Spark Plug

Service Interval: Yearly—Service the spark plug and replace it if necessary.

Use a **NGK BPR6ES or Champion RN9YC** spark plug or equivalent.

1. Stop the engine and wait for all moving parts to stop.
2. Rotate the discharge chute so that it faces forward.
3. Remove the discharge chute, the discharge chute handle, and the chute seal by removing the 3 large screws and one small screw (Figure 31).

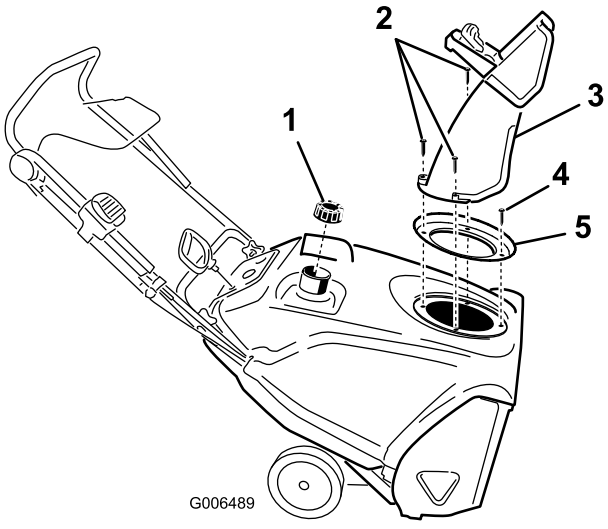

Figure 31

1. Fuel tank cap
2. Large screws (3)
3. Discharge chute
4. Small screw
5. Chute seal

4. Remove the 4 screws that secure the shroud (Figure 32).

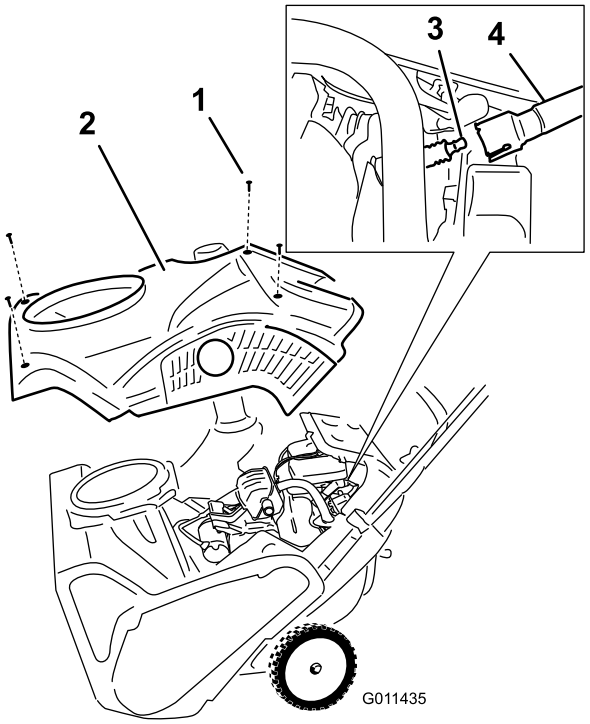

Figure 32

1. Screw (4)
2. Shroud
3. Spark plug
4. Spark-plug wire

5. Remove the fuel tank cap.
6. Remove the shroud (Figure 32).
7. Install the fuel tank cap.
8. Disconnect the wire from the spark plug.
9. Clean around the spark plug.
10. Remove the spark plug from the cylinder head.

Important: Replace a cracked, fouled, or dirty spark plug. Do not clean the electrodes because grit entering the cylinder can damage the engine.

11. Set the gap on the plug to 0.030 inch (0.76 mm) (Figure 33).

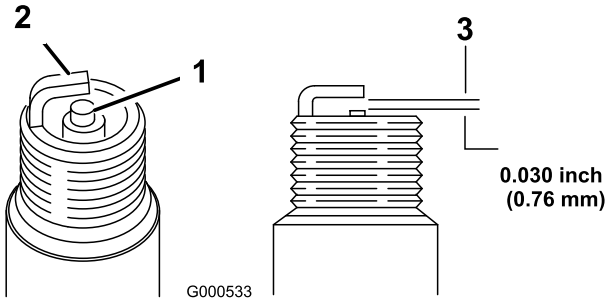

Figure 33

1. Center electrode insulator
2. Side electrode
3. Air gap (not to scale)

12. Install the spark plug and torque it to 20–22 ft-lb (27–30 N-m).
13. Connect the wire to the spark plug.

Note: Ensure that the breather tube is routed above the spark plug wire as shown in Figure 34.

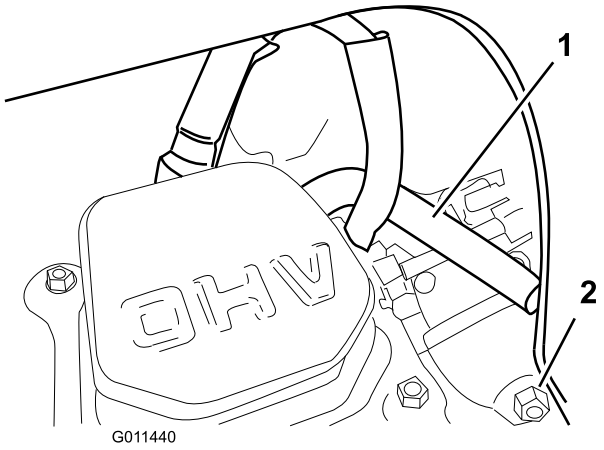

Figure 34

1. Breather tube
2. Carburetor drain bolt

14. Remove the fuel tank cap.
15. Install the shroud with the screws you removed in step 4.

Note: Ensure that the upper and lower shrouds fit together in the side grooves.

16. Install the fuel tank cap.
17. Install the chute seal, the discharge chute, and the discharge chute handle onto the snowthrower using the hardware you removed in step 3.

Note: The small screw goes through the small hole in the chute seal at the front of the discharge chute opening.

Replacing the Drive Belt

If drive belt becomes worn, oil-soaked, excessively cracked, frayed, or otherwise damaged, replace the belt.

1. Remove the drive belt cover by removing the 3 bolts as shown in Figure 35.

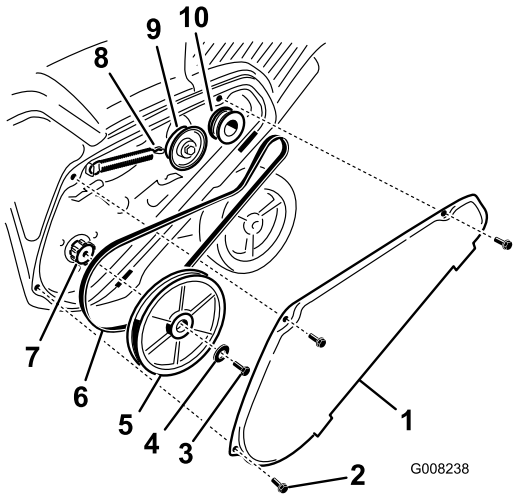

Figure 35

1. Drive belt cover
2. Bolt (3)
3. Rotor pulley bolt
4. Curved washer
5. Rotor pulley
6. Drive belt
7. Rotor shaft
8. Brake spring (unhook from idler arm here)
9. Idler pulley
10. Engine pulley

2. Unhook the brake spring from the idler arm to release the belt tension (Figure 35).
3. Remove the screw and curved washer that holds the rotor pulley (Figure 35).
4. Remove the rotor pulley and the drive belt (Figure 35).
5. Install the new drive belt, routing it as shown in (Figure 36).

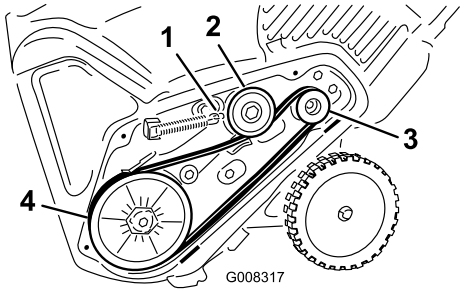

Figure 36

1. Brake spring (install on idler arm here)
2. Idler pulley
3. Engine pulley
4. Rotor pulley

Note: Route the new drive belt first around the engine pulley, then the idler pulley, and finally around the loose rotor pulley positioned just above the rotor shaft (Figure 35).

6. Install the rotor pulley onto the rotor shaft (Figure 35).
7. Install the curved washer and the rotor pulley bolt and tighten them securely (Figure 35).

   Note: The concave side of the curved washer goes against the outside of the pulley.
8. Install the brake spring onto the idler arm (Figure 36).
9. Install the drive belt cover with the bolts you removed in step 1.

   Note: Ensure that the drive belt is properly adjusted and operating; refer to Checking the Control Cable and Adjusting the Control Cable.

Adjusting the Quick Shoot™ Control

If there is more than 1/2 inch (13 mm) of slack in the Quick Shoot cable (Figure 37) or the discharge chute does not rotate left and right in equal angles, adjust the Quick Shoot control cables.

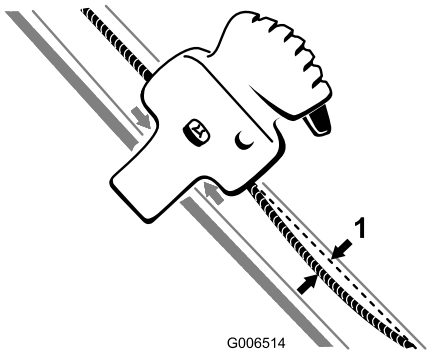

Figure 37

1. 1/2 inch (13 mm) maximum slack

1. Loosen the two Quick Shoot control cable clamps (Figure 38).

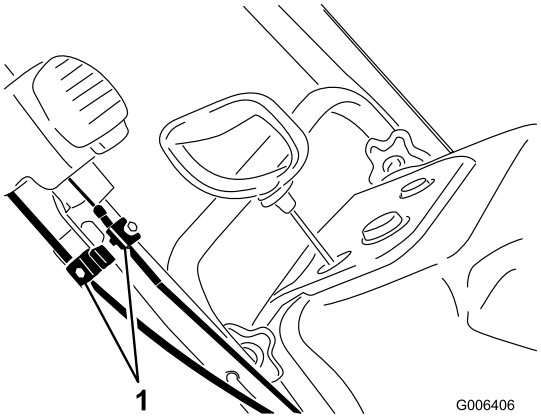

Figure 38

1. Cable clamps

2. Position the Quick Shoot control between the two arrows located on the right hand side of the upper handle (Figure 39).

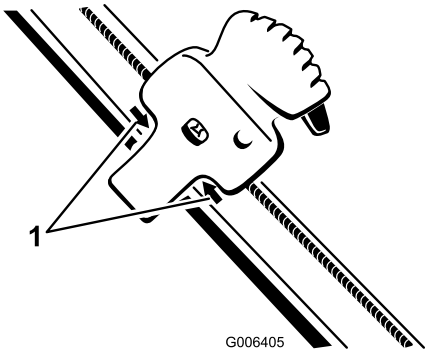

Figure 39

1. Arrows

3. Rotate the discharge chute so that it faces straight ahead and the arrow on the back of the discharge chute aligns with the arrow on the shroud (Figure 40).

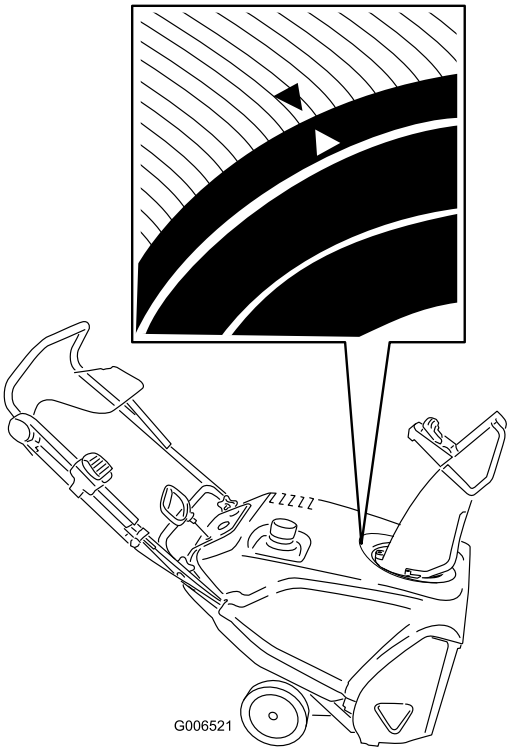

Figure 40

4. Hold the discharge chute in the straight-ahead position, pull the lower cable casing downward until you remove the slack in the cable, and tighten the screw on the lower cable clamp securely (Figure 41).

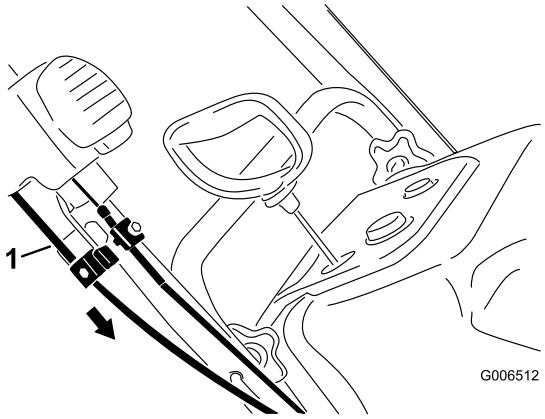

Figure 41

1. Lower cable casing

5. Pull the upper cable casing forward until you remove the slack in the cable, and tighten the screw on the upper cable clamp securely (Figure 42).

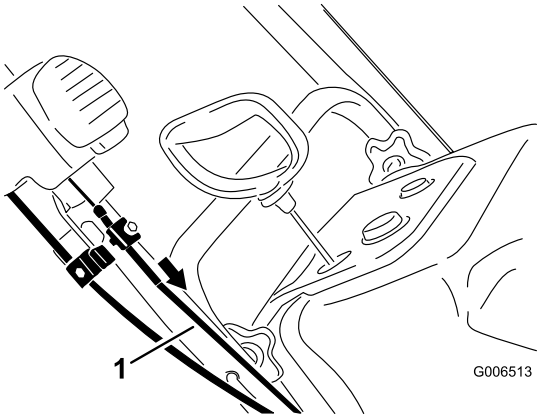

Figure 42

1. Upper cable casing

Note: Do not over-tension the cables. If the cables are over-tensioned, the Quick Shoot will be hard to operate.

Storage

Storing the Snowthrower

- **Gasoline fumes are highly flammable, explosive, and dangerous if inhaled. If you store the product in an area with an open flame, the gasoline fumes may ignite and cause an explosion.**
- **Do not store the snowthrower in a house (living area), basement, or any other area where ignition sources may be present, such as hot water and space heaters, clothes dryers, furnaces, and other like appliances.**
- **Do not tip the snowthrower backward with fuel in the fuel tank; otherwise, fuel may leak out of the snowthrower.**

1. On the last refueling of the season, add fuel stabilizer to fresh fuel as directed by the engine manufacturer.
2. Run the engine for 10 minutes to distribute the conditioned fuel through the fuel system.
3. Stop the engine, allow it to cool, and siphon the fuel tank or run the engine until it stops.
4. Start the engine and run it until it stops.
5. Choke or prime the engine, start it a third time, and run the engine until it will not start.
6. Drain the fuel in the carburetor through the carburetor drain bolt (Figure 34) into an approved gasoline container.
7. Dispose of unused fuel properly. Recycle it according to local codes, or use it in your automobile.
8. While the engine is still warm, change the engine oil. Refer to Changing the Engine Oil.
9. Remove the spark plug.
10. Squirt 2 teaspoons of oil into the spark plug hole.
11. Install the spark plug by hand and then torque it to 20–22 ft-lb (27–30 N-m).
12. With the ignition key in the Off position, pull the recoil starter slowly to distribute the oil on the inside of the cylinder.
13. Clean the snowthrower.
14. Touch up chipped surfaces with paint available from an Authorized Service Dealer. Sand affected areas before painting, and use a rust preventative to prevent the metal parts from rusting.
15. Tighten any loose fasteners. Repair or replace any damaged parts.
16. Cover the snowthrower and store it in a clean, dry place out of the reach of children. Allow the engine to cool before storing it in any enclosure.

The Toro 2-Year GTS Starting Guarantee and The Toro Total Coverage Guarantee

A Two-Year Full Warranty (45 Day Limited Warranty for Commercial Use)

CCR
Power Clear
Single-Stage Snowthrowers

The Toro Starting Guarantee

The Toro Company and its affiliate, Toro Warranty Company, pursuant to an agreement between them, jointly guarantee that your Toro GTS (Guaranteed to Start) engine, when used for residential purposes*, will start on the first or second pull for two (2) years from the date of purchase, if you provide the routine maintenance it requires, or we will fix it free of charge.

This warranty covers the cost of parts and labor, but you must pay transportation costs.

Conditions and Products Covered

The Toro Company and its affiliate, Toro Warranty Company, pursuant to an agreement between them, jointly promise to repair the Toro Product listed below if used for residential purposes*, if defective in materials or workmanship or if it stops functioning due to the failure of a component for the period listed below.

This warranty covers the cost of parts and labor, but you must pay transportation costs.

The following time periods apply from the date of purchase:

Products	Warranty Period
Power Clear Snowthrowers and Attachments	2 years

Limited Warranty for Commercial Use

Gas-powered Toro Products used for commercial, institutional, or rental use, are warranted for 45 days against defects in materials or workmanship. Components failing due to normal wear are not covered by this warranty.

Instructions for Obtaining Warranty Service

If you think that your Toro Product contains a defect in materials or workmanship, follow this procedure:

1. Contact any Authorized Toro Service Dealer to arrange service at their dealership. To locate a dealer convenient to you, refer to the *Yellow Pages* of your telephone directory (look under “Lawn Mowers”) or access our web site at www.Toro.com. You may also call the numbers listed in item #3 to use the 24-hour Toro Dealer locator system.
2. Bring the product and your proof of purchase (sales receipt) to the Service Dealer. The dealer will diagnose the problem and determine if it is covered under warranty.
3. If for any reason you are dissatisfied with the Service Dealer’s analysis or with the assistance provided, contact us at:

   Customer Care Department, Consumer Division
   The Toro Company
   8111 Lyndale Avenue South
   Bloomington, MN 55420-1196
   Toll free at 866-336-5205 (U.S. customers)
   Toll free at 866-854–9033 (Canadian customers)

Owner Responsibilities

You must maintain your Toro Product by following the maintenance procedures described in the *Operator’s Manual*. Such routine maintenance, whether performed by a dealer or by you, is at your expense.

Items and Conditions Not Covered

There is no other express warranty except for special emission system coverage and engine warranty coverage on some products. This express warranty does not cover the following:

- Cost of regular maintenance or wear parts, such as rotor blades (paddles), scraper blades, belts, fuel, lubricants, oil changes, spark plugs, cable/linkage or brake adjustments
- Any product or part which has been altered or misused and requires replacement or repair due to accidents or lack of proper maintenance
- Repairs necessary due to failure to use fresh fuel (less than one month old), or failure to properly prepare the unit prior to any period of non-use over one month
- Pickup and delivery charges
- Operational misuse, neglect, or accidents
- Repairs or attempted repairs by anyone other than an Authorized Toro Service Dealer
- Repairs or adjustments to correct starting difficulties due to the following:

  — failure to follow proper maintenance procedures

  — snowthrower auger/paddles striking an object

  — contaminants in the fuel system

  — improper fuel or fuel/oil mixture (consult your *Operator’s Manual* if in doubt)

  — failure to drain the fuel system prior to any period of non-use over one month
- Special operational conditions where starting may require more than two pulls:

  — first time starts after extended period of non-use over three months or seasonal storage

  — improper starting procedures

If you are having difficulty starting your unit, please check the *Operator’s Manual* to ensure that you are using the correct starting procedures. This can save an unnecessary visit to a Service Dealer.

General Conditions

All repairs covered by these warranties must be performed by an Authorized Toro Service Dealer using Toro approved replacement parts. Repair by an Authorized Toro Service Dealer is your sole remedy under this warranty.

Neither The Toro Company nor Toro Warranty Company is liable for indirect, incidental, or consequential damages in connection with the use of the Toro Products covered by these warranties, including any cost or expense of providing substitute equipment or service during reasonable periods of malfunction or non-use pending completion of repairs under these warranties.

Some states do not allow exclusions of incidental or consequential damages, so the above exclusions may not apply to you.

This warranty gives you specific legal rights, and you may also have other rights which vary from state to state.

Countries Other than the United States or Canada

Customers who have purchased Toro products exported from the United States or Canada should contact their Toro Distributor (Dealer) to obtain guarantee policies for your country, province, or state. If for any reason you are dissatisfied with your Distributor’s service or have difficulty obtaining guarantee information, contact the Toro importer. If all other remedies fail, you may contact us at Toro Warranty Company.

*Residential purposes means use of the product on the same lot as your home. Use at more than one location, or institutional or rental use, is considered commercial use, and the commercial use warranty would apply.