Form No. 3362-591 Rev A

# Power Max® Snowthrowers

**Model No. 38597—Serial No. 310000001 and Up**
**Model No. 38629—Serial No. 310000001 and Up**
**Model No. 38637—Serial No. 310000001 and Up**
**Model No. 38639—Serial No. 310000001 and Up**
**Model No. 38657—Serial No. 310000001 and Up**

**Operator's Manual**

# Introduction

**This snowthrower is intended to be used by residential homeowners or professional, hired operators. It is designed primarily for removing snow from paved surfaces, such as driveways and sidewalks, and other surfaces for traffic on residential or commercial properties. It is not designed for removing materials other than snow, nor is a model with a pivoting scraper designed for clearing off gravel surfaces.**

Read this information carefully to learn how to operate and maintain your product properly and to avoid injury and product damage. You are responsible for operating the product properly and safely.

You may contact Toro directly at www.Toro.com for product and accessory information, help finding a dealer, or to register your product.

Whenever you need service, genuine Toro parts, or additional information, contact an Authorized Service Dealer or Toro Customer Service and have the model and serial numbers of your product ready. Figure 1 identifies the location of the model and serial numbers on the product. Write the numbers in the space provided.

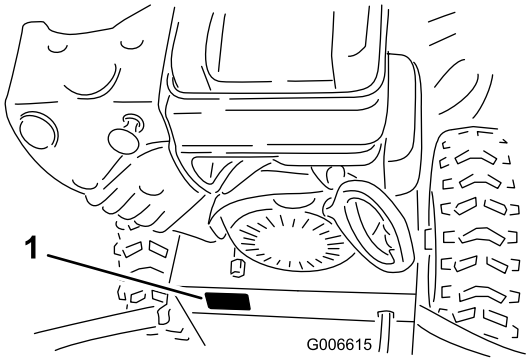


**Figure 1**

1. Model and serial number location

**Model No.** _____

**Serial No.** _____

This manual identifies potential hazards and has safety messages identified by the safety alert symbol (Figure 2), which signals a hazard that may cause serious injury or death if you do not follow the recommended precautions.



**Figure 2**

1. Safety alert symbol

This manual uses 2 words to highlight information. **Important** calls attention to special mechanical information and **Note** emphasizes general information worthy of special attention.

**Replacement Engine Owner's Manuals may be ordered through the engine manufacturer.**

© 2009—The Toro® Company
8111 Lyndale Avenue South
Bloomington, MN 55420

Register at www.Toro.com.

CE

Original Instructions (EN)
Printed in the USA
All Rights Reserved

# Safety

## Before Operating

- **Read and understand the contents of this manual before operating the snowthrower.**
- **Become familiar with all controls and know how to stop the engine quickly.**

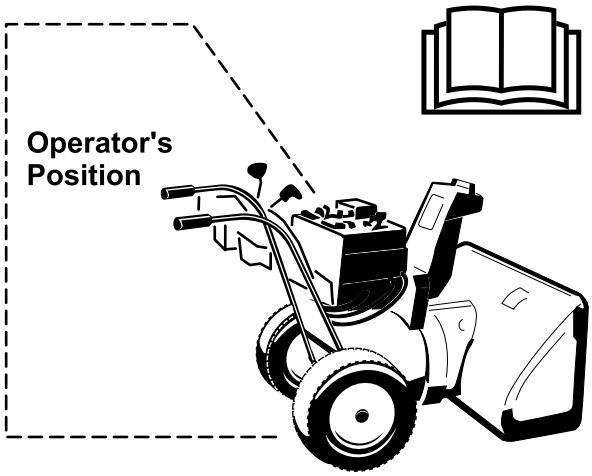


## Caution: Improper use may result in loss of fingers, hands, or feet.

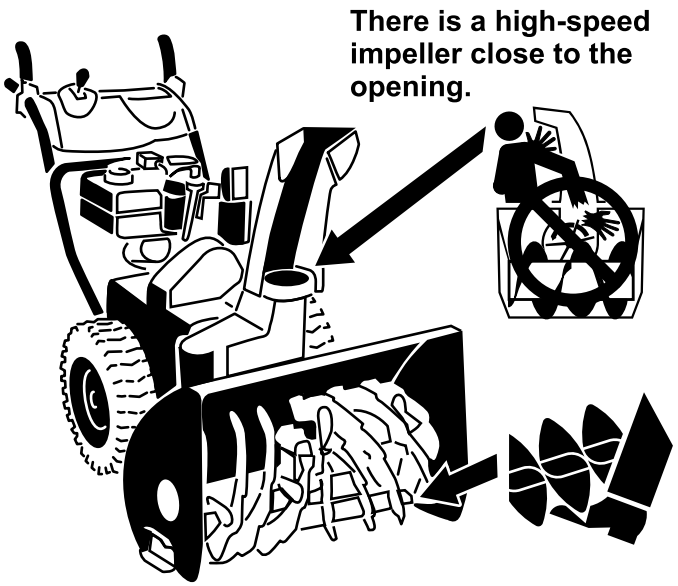


**The low-speed auger has a moving pinch point close to the opening.**

**This snowthrower meets or exceeds the ISO standard 8437 in effect at the time of production.**

**Read and understand the contents of this manual before the engine is ever started.**

**⚠This is the safety alert symbol. It is used to alert you to potential personal injury hazards. Obey all safety messages that follow this symbol to avoid possible injury or death.**

**Improperly using or maintaining this snowthrower could result in injury or death. To reduce this potential, comply with the following safety instructions.**

# Training

- Read the operating and service instruction manual carefully. Be thoroughly familiar with the controls and the proper use of the equipment. Know how to stop the unit and disengage the controls quickly.
- Never allow children to operate the equipment. Never allow adults to operate the equipment without proper instruction.
- Keep the area of operation clear of all persons, particularly small children, and pets.
- Exercise caution to avoid slipping or falling, especially when operating in reverse.

# Preparation

- Thoroughly inspect the area where the equipment is to be used and remove all doormats, sleds, boards, wires, and other foreign objects.
- Disengage all clutches and shift into neutral before starting the engine.
- Do not operate the equipment without wearing adequate winter garments. Wear footwear which will improve footing on slippery surfaces.
- Handle fuel with care; it is highly flammable.
  - Use an approved fuel container.
  - Never add fuel to a running or hot engine.
  - Fill fuel tank outdoors with extreme care. Never fill fuel tank indoors.
  - Replace gasoline caps securely and wipe up spilled fuel.
- Adjust the collector housing height to clear gravel or crushed rock surface.
- Never attempt to make any adjustments while the engine is running (except where specifically recommended by manufacturer).
- Let engine and machine adjust to outdoor temperatures before starting to clear snow.
- The operation of any powered machine can result in foreign objects being thrown into the eyes. Always

wear safety glasses or eye shields during operation or while performing an adjustment or repair.

## Operation

- Do not put hands or feet near or under rotating parts. Keep clear of the discharge opening at all times.
- Exercise extreme caution when operating on or crossing gravel drives, walks, or roads. Stay alert for hidden hazards or traffic.
- After striking a foreign object, stop the engine, remove the wire from the spark-plug, thoroughly inspect the snow thrower for any damage, and repair the damage before restarting and operating the snow thrower.
- If the unit should start to vibrate abnormally, stop the engine and check immediately for the cause. Vibration is generally a warning of trouble.
- Stop the engine whenever you leave the operating position, before unclogging the collector/impeller housing or discharge guide, and when making any repairs, adjustments, or inspections.
- When cleaning, repairing, or inspecting, make certain the collector/impeller and all moving parts have stopped. Disconnect the spark-plug wire, and keep the wire away from the plug to prevent accidental starting.
- Do not run the engine indoors, except when starting it and for moving the snow thrower in or out of the building. Open the outside doors; exhaust fumes are dangerous.
- Do not clear snow across the face of slopes. Exercise extreme caution when changing direction on slopes. Do not attempt to clear steep slopes.
- Never operate the snow thrower without proper guards, plates, or other safety protective devices in place.
- Never operate the snow thrower near glass enclosures, automobiles, window wells, drop-offs, etc. without proper adjustment of the snow discharge angle. Keep children and pets away.
- Do not overload the machine capacity by attempting to clear snow at too fast a rate.
- Never operate the machine at high transport speeds on slippery surfaces. Use care when reversing.
- Never direct discharge at bystanders or allow anyone in front of the unit.
- Disengage power to the collector/impeller when snow thrower is transported or not in use.
- Use only attachments and accessories approved by the manufacturer of snow thrower (such as wheel weights, counterweights, cabs, etc.).
- Never operate the snow thrower without good visibility or light. Always be sure of your footing, and keep a firm hold on the handles. Walk; never run.
- Never operate the snow thrower without good visibility or light.
- Take all possible precautions when leaving the machine unattended. Shift into neutral, set the parking brake, stop the engine and remove the key.

## Maintenance and Storage

- Check all fasteners at frequent intervals for proper tightness to be sure the equipment is in safe working condition.
- Never store the machine with fuel in the fuel tank inside a building where ignition sources are present such as hot water and space heaters, clothes dryers, etc. Allow the engine to cool before storing in any enclosure.
- Always refer to owner's guide instructions for important details if the snow thrower is to be stored for an extended period.
- Maintain or replace safety and instructions labels, as necessary.
- Run the machine a few minutes after throwing snow to prevent freeze-up of the collector/impeller.

## Toro Snowthrower Safety

The following list contains safety information specific to Toro products or other safety information that you must know.

- **Rotating rotor blades can injure fingers or hands.** Stay behind the handles and away from the discharge opening while operating the snowthrower. **Keep your face, hands, feet, and any other part of your body or clothing away from moving or rotating parts.**
- Before adjusting, cleaning, repairing, and inspecting the snowthrower, and before unclogging the discharge chute, **stop the engine, remove the key, and wait for all moving parts to stop.**
- Use the snow cleanout tool, **not your hands**, to remove obstructions from the discharge chute.
- **Before** leaving the operating position, stop the engine, remove the key, and wait for all moving parts to stop.

- Do not wear loose-fitting clothing that could get caught in moving parts.
- If a shield, safety device, or decal is damaged, illegible, or lost, repair or replace it before beginning operation. Also, tighten any loose fasteners.
- **Do not** smoke while handling gasoline.
- **Do not** use the snowthrower on a roof.
- Do not touch the engine while it is running or soon after it has stopped because the engine may be hot enough to cause a burn.
- Perform only those maintenance instructions described in this manual. Before performing any maintenance, service, or adjustment, stop the engine, remove the key, and disconnect the wire from the spark plug. If major repairs are ever needed, contact an Authorized Service Dealer.
- Do not change the governor settings on the engine.
- When storing the snowthrower for more than 30 days, drain the fuel from the fuel tank to prevent a potential hazard. Store fuel in an approved fuel container. Remove the key from the ignition switch before storing the snowthrower.
- Purchase only genuine Toro replacement parts and accessories.

## Sound Pressure

This unit has a maximum sound pressure level at the operator's ear of 86 dBA (90 dBA for model 38657) based on measurements of identical machines per EN 11201.

## Sound Power

This unit has a guaranteed sound power level of 102 dBA (105 dBA for model 38657), based on measurements of identical machines per EN 3744.

## Vibration

This unit does not exceed a hand/arm vibration level of 4.5 $m/s^2$ (7.1 $m/s^2$ for model 38657), based on measurements of identical machines per EN 1033.

# Safety and Instructional Decals

**Important: Safety and instruction decals are located near areas of potential danger. Replace damaged decals.**

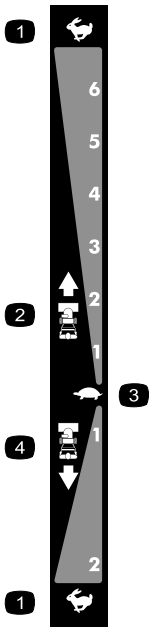


**106-4525**

Reorder part no. 112-6633

1. Fast
2. Forward speeds
3. Slow
4. Reverse speeds




**107-3040**

1. Cutting dismemberment, impeller and cutting dismemberment, auger hazards—keep bystanders a safe distance from the snowthrower.

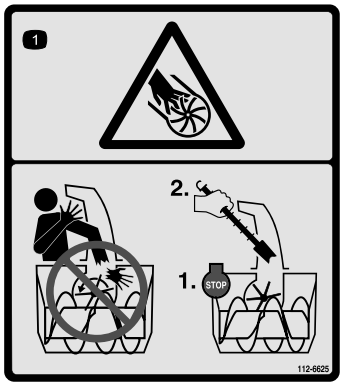


**112-6625**

Reorder part no. 112-6629

1. Cutting/dismemberment hazard, impeller—do not place your hand in the chute; stop the engine before leaving the operator's position, use the tool to clear the chute.

---

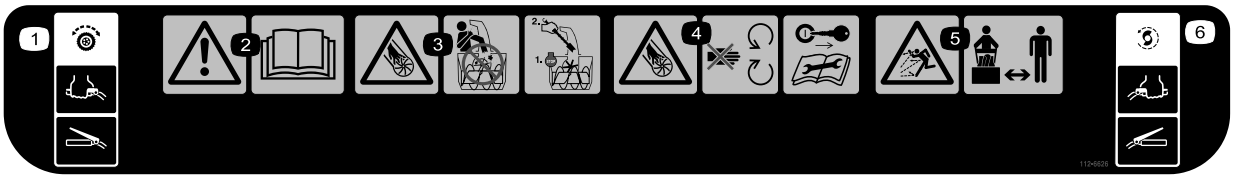


**112-6626**

1. Traction drive—squeeze the lever to engage; release the lever to disengage.
2. Warning—read the *Operator's Manual.*
3. Cutting/dismemberment hazard, impeller—do not place your hand in the chute; stop the engine before leaving the operator's position, use the tool clear the chute.
4. Cutting/dismemberment hazard, impeller and auger—stay away from moving parts, keep all guards and shields in place; remove the ignition key and read the instructions before servicing or performing maintenance.
5. Thrown object hazard—keep bystanders a safe distance from the snowthrower.
6. Auger/impeller drive—squeeze the lever to engage; release the lever to disengage.

---

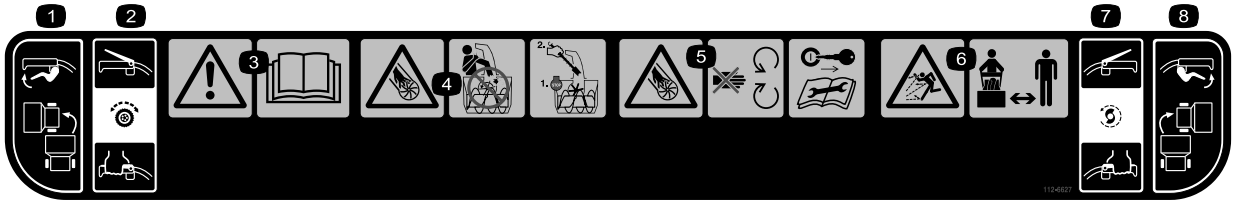


**112-6627**

1. Left turn control
2. Traction drive—squeeze the lever to engage; release the lever to disengage.
3. Warning—read the *Operator's Manual.*
4. Cutting/dismemberment hazard, impeller—do not place your hand in the chute; stop the engine before leaving the operator's position, use the tool to clear the chute.
5. Cutting/dismemberment hazard, impeller—keep away from moving parts; remove the ignition key and read the instructions before servicing or performing maintenance.
6. Thrown object hazard—keep bystanders a safe distance from the snowthrower.
7. Auger/impeller drive—squeeze the lever to engage; release the lever to disengage.
8. Right turn control

---




**Briggs Part No. 273676**

1. Stop
2. Slow
3. Fast

---




**Briggs Part No. 274681**

1. Fuel—On
2. Fuel—Off

---




**Briggs Part No. 276923**

1. Primer
2. Choke off (Run)
3. Choke on (Choke)
4. Ignition key in (Engine—Run)
5. Ignition key out (Engine—Stop)

---




**Briggs Part No. 276925**

1. Warning—read the *Operator's Manual.*
2. Warning—fire hazard.
3. Warning—toxic gas inhalation hazard.
4. Warning—hot surface/burn hazard.

---

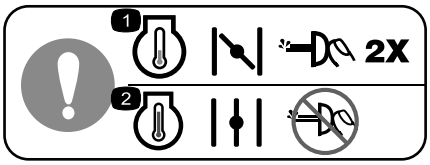


**Briggs Part No. 277566**

1. When starting a cold engine, close the choke and press the primer two times.
2. When starting a warm engine, open the choke and do not press the primer.

---

# Setup

## Loose Parts

Use the chart below to verify that all parts have been shipped.

| Procedure | Description | Qty. | Use |
|---|---|---|---|
| **1.** | Handle bolts<br>Curved washers<br>Locknuts | 4<br>4<br>4 | Install the upper handle. |
| **2.** | No parts required | – | Install the wheel clutch cable ends |
| **3.** | No parts required | – | Install the traction control linkage. |
| **4.** | Carriage bolts<br>Locknuts | 2<br>2 | Install the chute control rod. |
| **5.** | Cable tie | 1 | Connect the wire to the headlight. |
| **6.** | No parts required | – | Fill the engine with oil. |
| **7.** | No parts required | – | Check the tire pressure. |
| **8.** | No parts required | – | Check the skids. |
| **9.** | No parts required | – | Check the operation of the traction drive. |

# 1. Installing the Upper Handle

| | |
|---|---|
| 4 | Handle bolts |
| 4 | Curved washers |
| 4 | Locknuts |

## Procedure

**Note:** Do not remove the rubber band on the cables until you have installed the upper handle.

1. Lift and rotate the upper handle and position it over the lower handle (Figure 3).

   **Important: Route the cables attached to the Quick Stick inside the upper handle legs and ensure that the cables and the wire for the headlight are not pinched between the handle sections.**

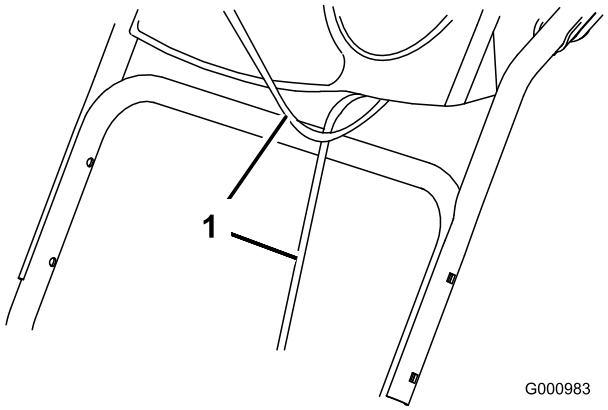


**Figure 3**

1. Cables

2. Secure the upper handle with 4 handle bolts, 4 curved washers, and 4 locknuts from the loose parts bag (Figure 4).

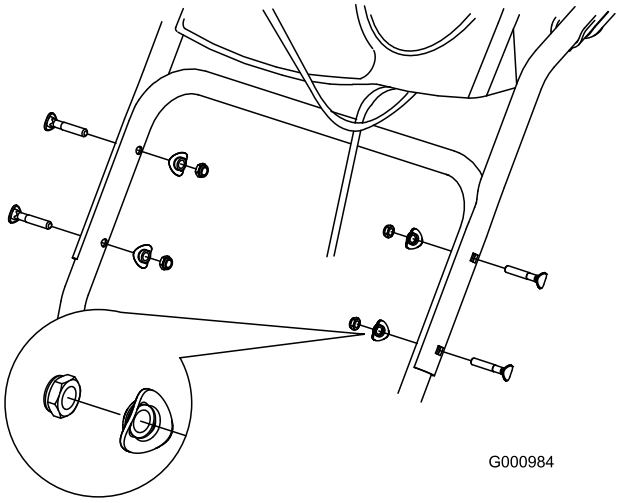


**Figure 4**

# 2. Installing the Wheel Clutch Cable Ends

## Procedure

**Models 38637 and 38657 only**

1. Unwrap the cable ends from the lower handle (Figure 5).

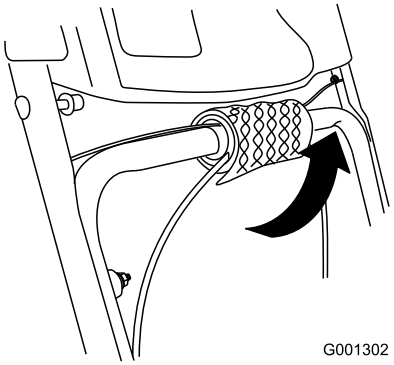


**Figure 5**

2. Route either the left or right cable end over the lower handle and insert the cable end into the hole in the corresponding wheel clutch lever (Figure 6).

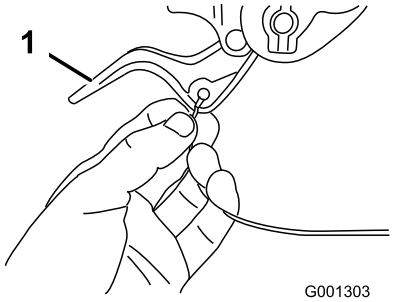


**Figure 6**

1. Wheel clutch lever

3. Remove the nut and washer from the handle, attach the cable clamp on the cable to the handle, install the washer and the nut, and hand tighten the nut (Figure 7).

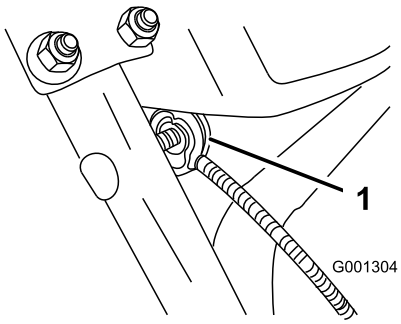


**Figure 7**

1. Cable clamp (2)

**Important: Ensure that the curved side of the cable clamp is against the handle and that the cable is routed below the clamp bolt. The cable must be in a straight line from the cable clamp to the point where it attaches to the wheel clutch lever.**

4. Pull the cable jacket down gently until the wheel clutch lever is down and the slack is out of the cable, then tighten the cable clamp nut securely (Figure 8).

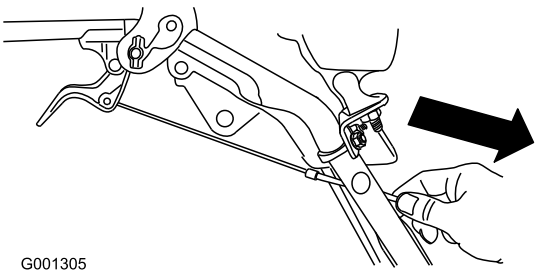


**Figure 8**

5. Squeeze the lever fully, then check the gap between the bottom of the handle and the wheel clutch lever end (Figure 9).

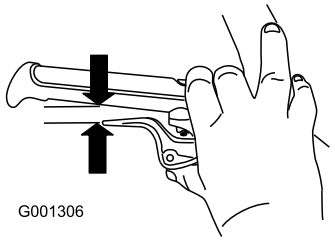


**Figure 9**

**Note:** The gap should be approximately the thickness of a pencil (1/4 inch or 6 mm). If it is greater, loosen the cable clamp nut, slide the cable jacket up slightly, tighten the cable clamp nut, and check the gap again.

6. Repeat steps 2 through 5 for the other cable.

# 3. Installing the Traction Control Linkage

## Procedure

1. Remove the hairpin cotter and washer from the lower end of the speed control rod and insert the lower end of the rod into the lower link arm so that the bent end of the speed control rod faces rearward (Figure 10).

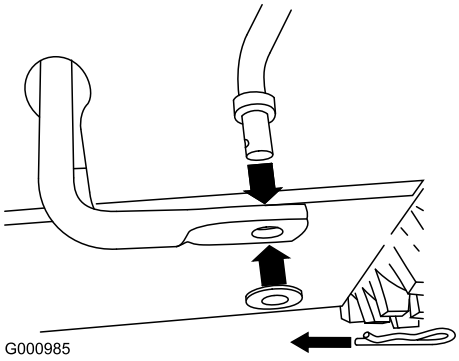


**Figure 10**

2. Secure the lower end of the speed control rod with the washer and hairpin cotter that you previously removed.
3. Remove the hairpin cotter and the outer washer from the trunnion on the upper end of the speed control rod (Figure 11).

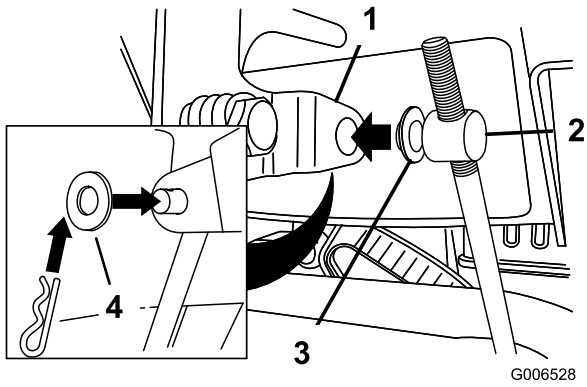


**Figure 11**

1. Speed selector lever
2. Trunnion
3. Inner washer
4. Outer washer

**Note:** To make installation easier, leave the flat washer on the trunnion (Figure 11).

4. Shift the speed selector lever into Position R2.
5. Rotate the lower link arm fully upward (counterclockwise) (Figure 12).

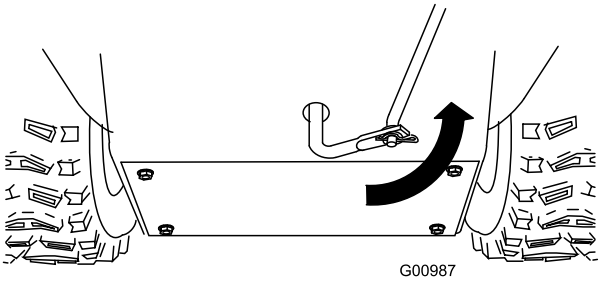


**Figure 12**

6. Lift up on the speed control rod and insert the trunnion into the hole in the speed selector lever (Figure 11).

**Note:** If the trunnion does not fit into the hole when you lift up on the speed control rod, rotate the trunnion upward or downward on the speed control rod until it fits.

7. Secure the trunnion and upper end of the speed control rod with the outer washer and a hairpin cotter you previously removed.

**Note:** For easier installation, look down through the opening in the speed selector (Figure 13).

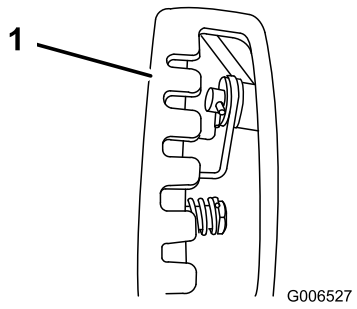


**Figure 13**

1. Speed selector

# 4. Installing the Chute Control Rod

| | |
|---|---|
| 2 | Carriage bolts |
| 2 | Locknuts |

## Procedure

1. Unwrap the Quick Stick and rotate it so that it is upright and in the center.
2. Hold the blue trigger cap down and pull the lever fully rearward.

   **Note:** The discharge chute and deflector should face forward. If they do not, hold the blue trigger cap down (but do not move the Quick Stick) and rotate the discharge chute until they do.
3. Align the flattened back end of the long chute control rod with the flattened front end of the short rod that extends from the control panel so that they nest together (Figure 14).

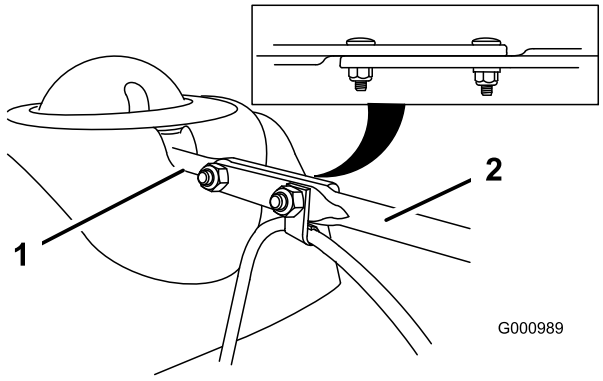


**Figure 14**

1. Short rod
2. Long chute control rod

4. Insert the front end of the rod into the opening in the back of the chute gear cover until it slides into the chute gear (Figure 15).

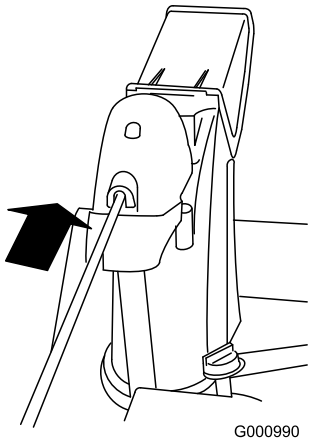


**Figure 15**

5. Align the holes in the nested ends of the rods and insert 2 carriage bolts (in the loose parts bag) through the short rod from the left side of the snowthrower (from the operating position).
6. Insert the cable clip that supports the deflector cable onto the forward carriage bolt, and secure the carriage bolts with locknuts from the loose parts bag (Figure 16).

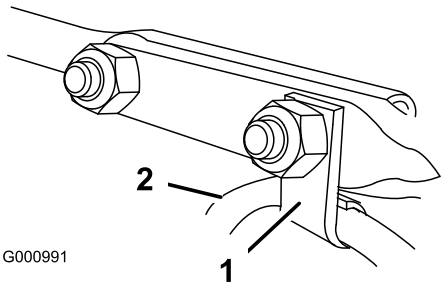


**Figure 16**

1. Cable clip
2. Deflector cable

7. Hold the blue trigger cap down and rotate the Quick Stick in a circle to ensure that the chute and deflector operate smoothly.

# 5. Connecting the Wire to the Headlight

| | |
|---|---|
| 1 | Cable tie |

## Procedure

1. Insert the wire connector on the loose end of the wire straight into the back of the headlight until it is securely in place (Figure 17).

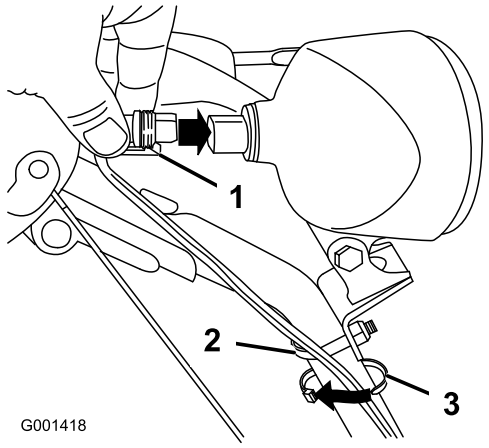


**Figure 17**

1. Plastic clip on wire connector
2. U-bolt
3. Cable tie

**Note:** Ensure that the plastic clip on the wire connector is on the bottom (Figure 17).

2. Secure a cable tie (from the loose parts bag) around the wire and the handle about an inch (2.5 cm) below the U-bolt (Figure 17).

# 6. Filling the Engine with Oil

## Procedure

Your snowthrower comes with oil in the engine crankcase.

**Note: Before starting the engine, check the oil level and add oil if necessary.**

Use automotive detergent oil with an API service classification of SF, SG, SH, SJ, SL, or higher. Refer to your engine owner's manual.

Use Figure 18 below to select the best oil viscosity for the outdoor temperature range expected:

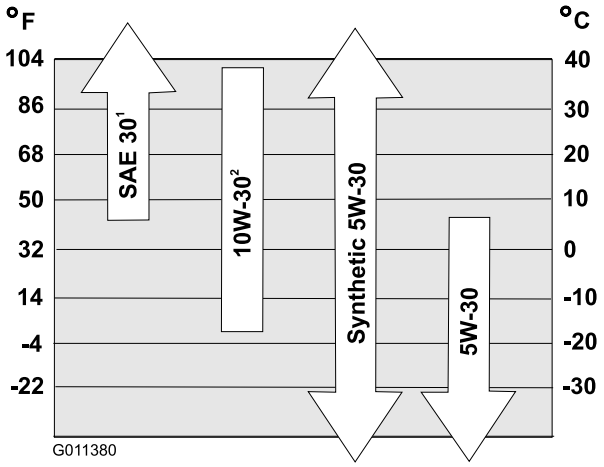


**Figure 18**

1. Using SAE 30 at outdoor temperatures below 40°F (4°C) will result in hard starting.
2. Using 10W-30 at outdoor temperatures above 80°F (27°C) may result in increased oil consumption; therefore, check the oil level more frequently in these circumstances.

**Engine Oil Capacities**

| Model | Engine Oil Capacity |
|---|---|
| 38597 | 18 to 20 oz. (0.53 to 0.59 l) |
| 38629 | |
| 38637 | |
| 38639 | |
| 38657 | 26 to 28 oz. (0.77 to 0.83 l) |

1. Remove the dipstick and **slowly** pour oil into the oil fill tube to raise the oil level to the Full mark on the dipstick. **Do not overfill** (Figure 19). Refer to Checking the Engine Oil Level in Maintenance.

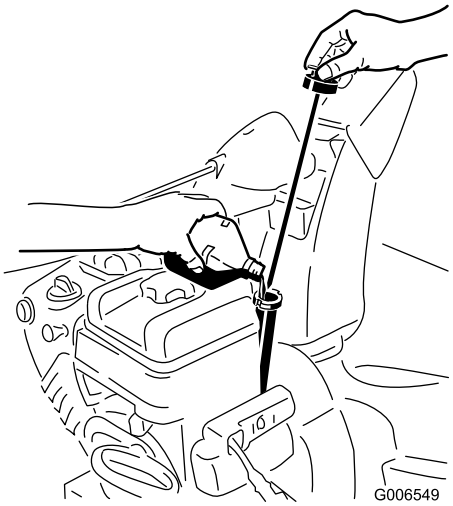


**Figure 19**

2. Install the dipstick securely.

**Note:** Do not spill oil around the oil fill tube; oil could leak onto traction parts and cause the traction to slip.

# 7. Checking the Tire Pressure

## Procedure

The tires are overinflated at the factory for shipping. Reduce the pressure equally in both tires to between 17 and 20 psi (116 and 137 kPa).

# 8. Checking the Skids

## Procedure

Refer to Checking and Adjusting the Skids in Maintenance.

# 9. Checking the Traction Drive Operation

## Procedure

**If the traction drive is not properly adjusted, the snowthrower may move in the direction opposite of what you intended, causing injury and/or property damage.**

**Carefully check the traction drive and adjust it properly, if necessary.**

1. Start the engine; refer to Starting the Engine.
2. Move the speed selector to Position R1; refer to Operating the Speed Selector.
3. Squeeze the left hand (traction) lever to the hand-grip (Figure 20).

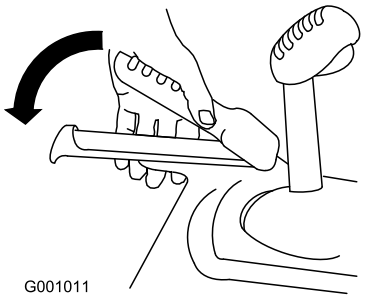


**Figure 20**

The snowthrower should move rearward. If the snowthrower does not move or moves forward, complete the following:

A. Release the traction lever and stop the engine.

B. Disconnect the trunnion from the speed selector lever (Figure 11).

C. Turn the trunnion downward (clockwise) on the speed control rod (Figure 11).

D. Connect the trunnion to the speed selector lever (Figure 11).

4. Release the traction lever.
5. Move the speed selector to the Position 1; refer to Operating the Speed Selector.
6. Squeeze the left hand (traction) lever to the hand-grip (Figure 20).

   The snowthrower should move forward. If the snowthrower does not move or moves rearward, complete the following:

   A. Release the traction lever and stop the engine.

   B. Disconnect the trunnion from the speed selector lever (Figure 11).

   C. Turn the trunnion upward (counterclockwise) on the speed control rod (Figure 11).

   D. Connect the trunnion to the speed selector lever (Figure 11).

7. If you made any adjustments, repeat this procedure until no adjustments are required.

**Important: If the snowthrower moves when the traction lever is in the released position, check the traction cable (refer to Checking and Adjusting the Traction Cable) or take the snowthrower to an Authorized Service Dealer for service.**

# Product Overview

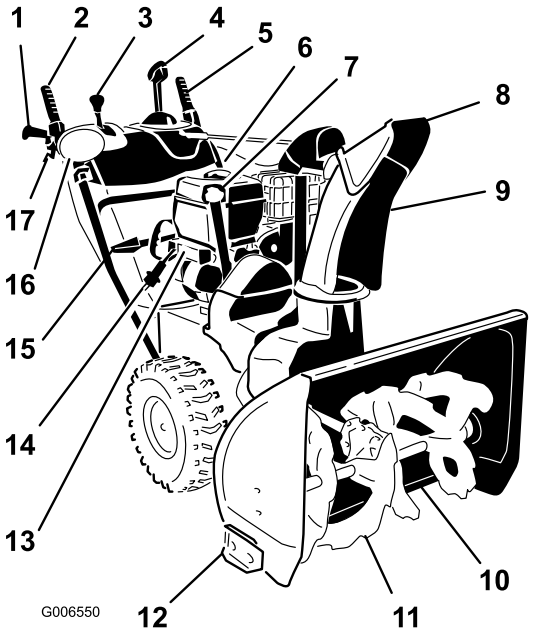


**Figure 21**

1. Hand-grip (2)
2. Auger/impeller lever
3. Speed selector lever
4. Quick Stick™ discharge chute control
5. Traction lever
6. Fuel tank cap
7. Engine oil fill tube/dipstick
8. Chute deflector
9. Discharge chute
10. Scraper
11. Auger
12. Skid (2)
13. Electric starter button (all models except 38597)
14. Electric starter plug (all models except 38597)
15. Snow cleanout tool
16. Headlight (models 38637, 38639, and 38657 only)
17. Wheel clutch lever (2) (models 38637 and 38657 only)

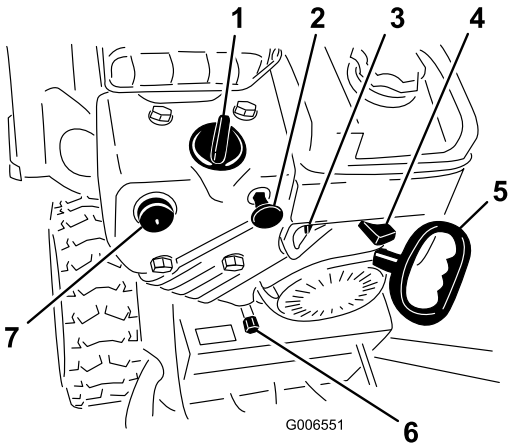


**Figure 22**

1. Choke
2. Ignition switch
3. Fuel shutoff valve
4. Throttle
5. Recoil starter
6. Oil drain plug
7. Primer

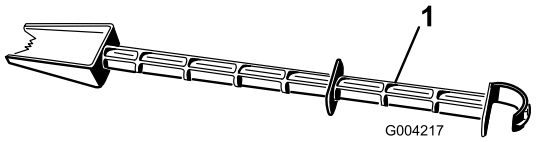


**Figure 23**

1. Snow cleanout tool (attached to the handle)

# Operation

**Note:** Determine the left and right sides of the machine from the normal operating position.

## Filling the Fuel Tank

**Gasoline is extremely flammable and explosive. A fire or explosion from gasoline can burn you and others.**

- **To prevent a static charge from igniting the gasoline, place the container and/or snowthrower on the ground before filling, not in a vehicle or on an object.**
- **Fill the tank outdoors when the engine is cold. Wipe up spills.**
- **Do not handle gasoline when smoking or around an open flame or sparks.**
- **Store gasoline in an approved fuel container, out of the reach of children.**

Fill the fuel tank with fresh unleaded regular gasoline from a major name-brand service station (Figure 24).

**Important: To reduce starting problems, add fuel stabilizer to the fuel all season, mixing it with gasoline less than 30 days old. *Do not add oil to the gasoline.***

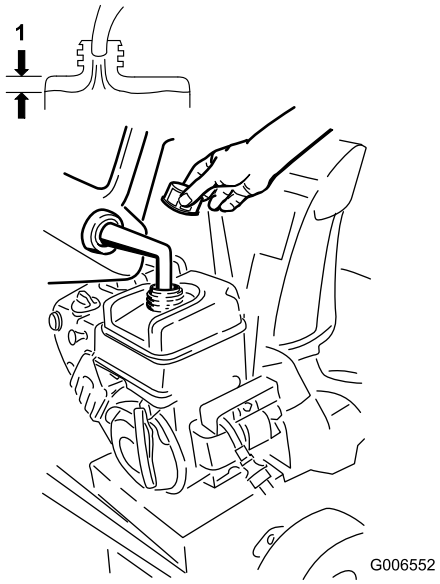


**Figure 24**

1. 1-1/2 inch (3.8 cm)

# Starting the Engine

1. Check the engine oil level. Refer to Checking the Engine Oil Level in Maintenance.
2. Turn the fuel shutoff valve 1/4 turn counterclockwise to open it (Figure 25).

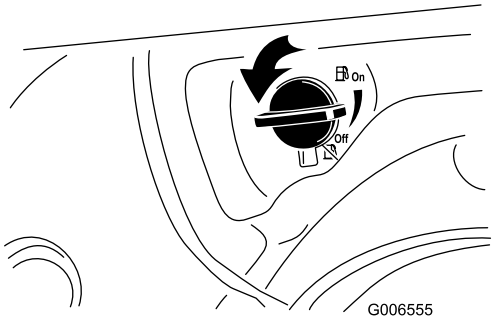


**Figure 25**

3. Insert the ignition key (Figure 26).

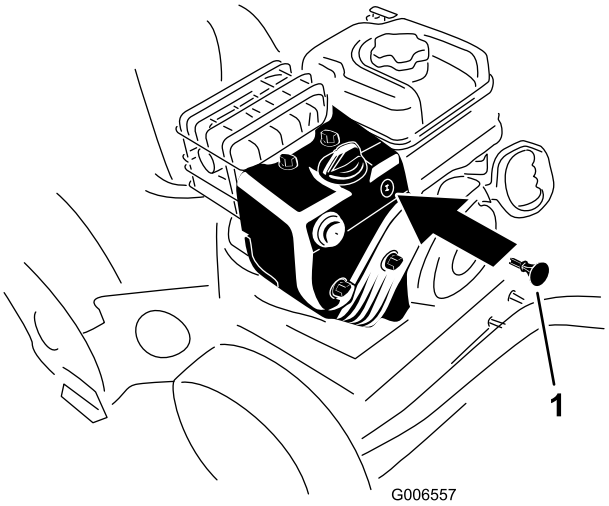


**Figure 26**

1. Ignition key

4. Firmly push in the primer with your thumb 2 times (15°F or -9°C or above) or 4 times (below 15°F or -9°C), holding the primer in for a second before releasing it each time (Figure 27).

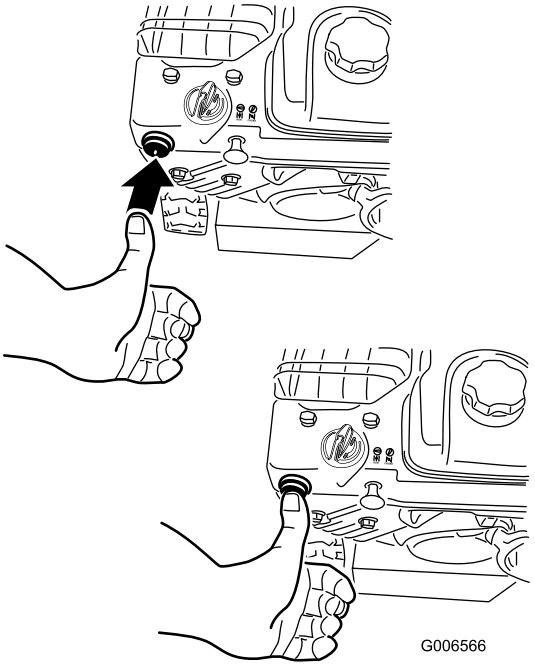


**Figure 27**

5. Rotate the choke to the Choke position (Figure 28).

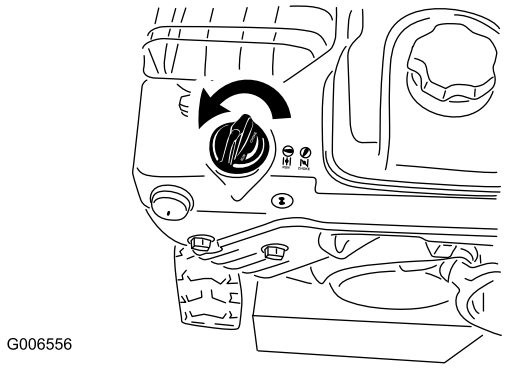


**Figure 28**

6. Move the throttle to the Fast position (Figure 29).

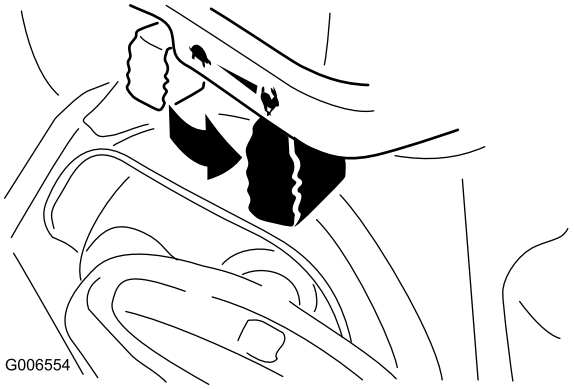


**Figure 29**

7. Start the snowthrower pulling the recoil starter or pressing the electric-starter button (all models except 38597) (Figure 30).

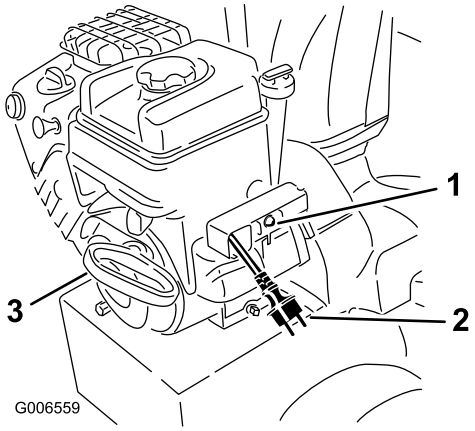


**Figure 30**

1. Electric-starter button (all models except 38597)
2. Electric starter plug (all models except 38597)
3. Recoil starter

**Note:** To use the electric starter, connect a power cord to the electric starter plug first and then to a power outlet (all models except 38597).

**Important: To prevent damaging the electric starter, run it in short cycles (5 seconds maximum, then wait one minute before trying to start it again). If the engine still does not start, take the snowthrower to an Authorized Service Dealer for service (all models except 38597).**

8. Disconnect the power cord from the power outlet first and then from the snowthrower (all models except 38597).
9. Allow the engine to warm up for several minutes, move the choke toward the Run position. Wait for the engine to run smoothly before each choke adjustment.

**If you leave the snowthrower plugged into a power outlet, someone can inadvertently start the snowthrower and injure people or damage property.**

**Unplug the power cord whenever you are not starting the snowthrower.**

# Stopping the Engine

1. Move the throttle to the Slow position, and then to the Stop position (Figure 31).

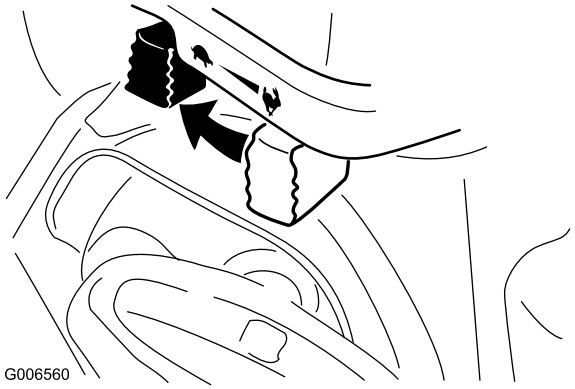


**Figure 31**

2. Wait for all moving parts to stop before leaving the operating position.
3. Remove the ignition key.
4. Close the fuel shutoff valve by rotating it clockwise (Figure 32).

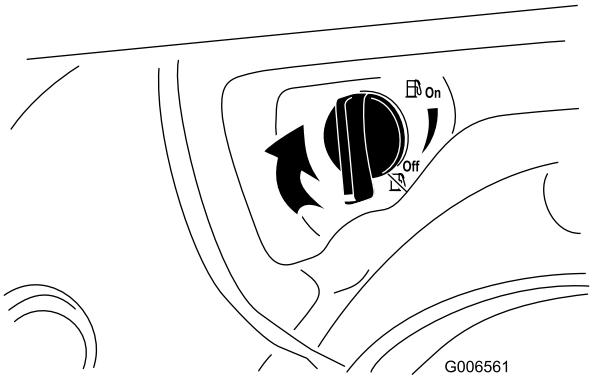


**Figure 32**

5. Pull the recoil starter 3 or 4 times. This helps prevent the recoil starter from freezing up.

# Operating the Traction Drive

**If the traction drive is not properly adjusted, the snowthrower may move in the direction opposite of what you intended, causing injury and/or property damage.**

**Carefully check the traction drive and adjust it properly, if necessary; refer to Checking the Traction Drive Operation in Setup for more information.**

**Important: If the snowthrower moves when the traction lever is in the released position, check the traction cable (refer to Checking and Adjusting the Traction Cable) or take the snowthrower to an Authorized Service Dealer for service.**

1. To engage the traction drive, squeeze the left hand (traction) lever to the hand-grip (Figure 33).

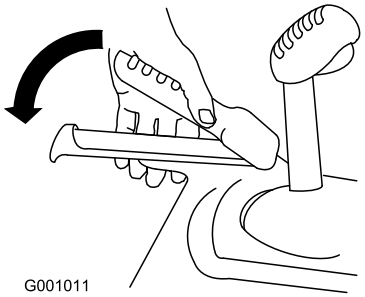


**Figure 33**

2. To stop the traction drive, release the traction lever.

# Using the Wheel Clutch Levers

**Models 38637 and 38657 only**

The wheel clutch levers allow you to momentarily disengage the drive to one or both wheels with the traction drive lever still engaged. This enables you to turn and maneuver the snowthrower easily.

**Note:** Holding down the traction lever against the handle engages the traction drive to both wheels.

To turn the snowthrower to the right, lift up on the right wheel clutch lever and squeeze it toward the handle (Figure 34).

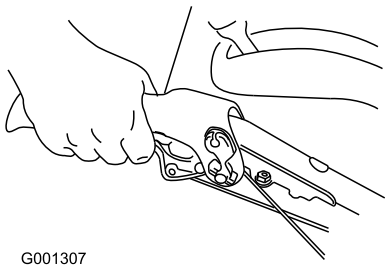


**Figure 34**

**Note:** This disengages the drive to the right wheel while the left wheel continues driving, and the snowthrower turns to the right.

**Note:** Similarly, squeezing the left wheel clutch lever turns the snowthrower to the left.

When you complete the turn, release the wheel clutch lever, and the drive re-engages both wheels (Figure 35).

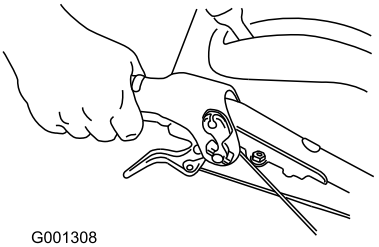


**Figure 35**

Momentarily squeezing and releasing the left or right wheel clutch lever also allows for steering adjustments to keep the snowthrower going in a straight line, especially in deep snow.

Squeezing both wheel clutch levers simultaneously disengages the drive to both wheels. This enables you to manually move the snowthrower backward without stopping to shift it into a reverse gear. It also allows you to maneuver and transport the snowthrower more easily when the engine is not running.

# Operating the Speed Selector

The speed selector has 6 forward and 2 reverse gears. To change speeds, release the traction lever and shift the speed selector lever to the desired position (Figure 36). The lever locks in a notch at each speed selection.

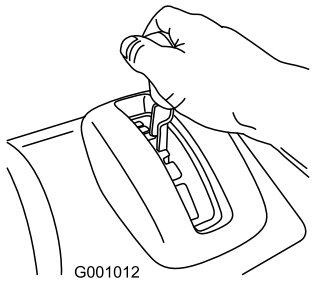


**Figure 36**

# Operating the Auger/Impeller Drive

1. To engage the auger/ impeller drive, squeeze the right hand (auger/ impeller) lever to the handgrip (Figure 37).

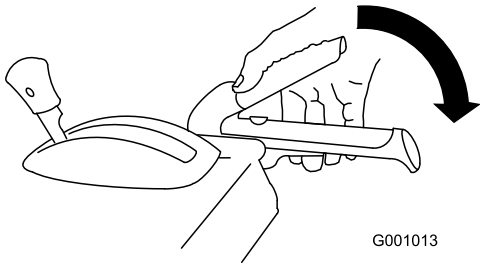


**Figure 37**

2. To stop the auger and impeller, release the right hand lever.

   **Important: When you engage both the auger/impeller lever and the traction lever, the traction lever locks the auger/impeller lever down, freeing your right hand. To release both levers, simply release the left hand (traction) lever.**

3. If the auger and impeller continue to rotate when you release the auger/impeller lever, do not operate the snowthrower. Check the auger/impeller cable (refer to Checking and Adjusting the Auger/Impeller Cable) and adjust it if necessary. Otherwise, take the snowthrower to an Authorized Dealer for service.

**If the auger and impeller continue to rotate when you release the auger/impeller lever, you could seriously injure yourself or others.**

**Do not operate the snowthrower. Take it to an Authorized Service Dealer for service.**

# Operating the Quick Stick®

Hold the blue trigger cap down to use the Quick Stick to move the discharge chute and the chute deflector. Release the trigger cap to lock the discharge chute and chute deflector into position (Figure 38).

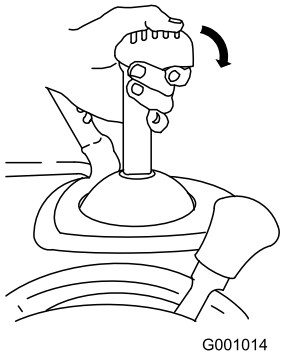


**Figure 38**

## Moving the Discharge Chute

Hold the blue trigger cap down and move the Quick Stick to the left to move the discharge chute to the left; move the Quick Stick to the right to move the discharge chute to the right (Figure 39).

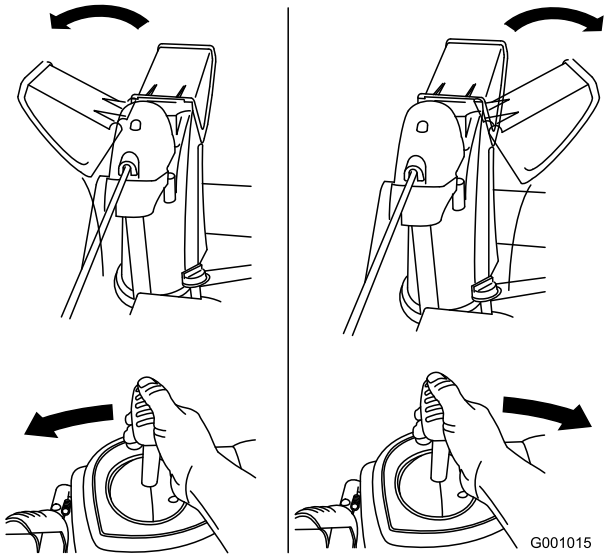


**Figure 39**

- If the chute does not move, refer to Adjusting the Discharge Chute Latch.
- If the chute does not turn as far to the left as it does to the right, ensure that the cable is routed to the inside of the handles. Refer to Installing the Upper Handle.
- If the chute does not lock into place when you release the trigger cap, refer to Adjusting the Discharge Chute Latch.

### Moving the Chute Deflector

Hold the blue trigger cap down and move the Quick Stick forward to lower the chute deflector; move it rearward to raise the chute deflector (Figure 40).

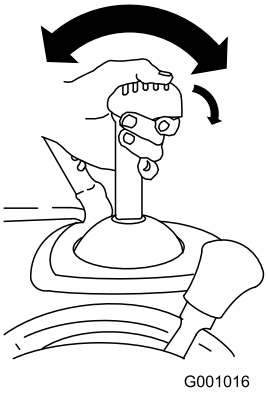


**Figure 40**

## Unclogging the Discharge Chute

If the auger/impeller is running but there is no snow coming out of the discharge chute, the discharge chute may be clogged.

- To unclog the discharge chute, stay in the operating position and release the left hand (traction) lever. While running the auger/impeller, push down on the handles to raise the front of the snowthrower a few inches (centimeters) off the pavement. Then lift the handles quickly to bump the front of the snowthrower on the pavement. Repeat if necessary until a stream of snow comes out the discharge chute.
- If you cannot unclog the discharge chute by bumping the front of the snowthrower, **stop the engine, wait for all moving parts to stop, and use a stick; never use your hand.**

  **Important: Unclogging the discharge chute by bumping the front of the snowthrower on the pavement may cause the skids to move. Adjust the skids and tighten the skid bolts securely.**

## Preventing Freeze-up

- In snowy and cold conditions, some controls and moving parts may freeze. **Do not use excessive force when trying to operate frozen controls.** If you have difficulty operating any control or part, start the engine and let it run for a few minutes.
- After using the snowthrower, let the engine run for a few minutes to prevent moving parts from freezing. Engage the auger/impeller to clear any remaining snow from inside the housing. Rotate the Quick Stick to prevent it from freezing. Stop the engine, wait for all moving parts to stop, and remove all ice and snow from the snowthrower.
- With the engine off, pull the recoil starter handle several times and push the electric-starter button once (all models except 38597) to prevent the recoil and electric starters from freezing up.

## Operating Tips

**When the snowthrower is in operation, the impeller and auger can rotate and cut off or injure hands and feet.**

- **Before adjusting, cleaning, inspecting, troubleshooting, or repairing the snowthrower, stop the engine and wait for all moving parts to stop. Disconnect the wire from the spark plug and keep it away from the plug to prevent someone from accidentally starting the engine.**
- **Remove an obstruction from the discharge chute; refer to Unclogging the Discharge Chute. If necessary, use a stick, not your hands, to remove an obstruction from the discharge chute.**
- **Stay behind the handles and away from the discharge opening while operating the snowthrower.**
- **Keep face, hands, feet, and any other part of your body or clothing away from concealed, moving, or rotating parts.**

**The rotor blades can throw stones, toys, and other foreign objects and cause serious personal injury to the operator or to bystanders.**

- **Keep the area to be cleared free of all objects that the rotor blades could pick up and throw.**
- **Keep all children and pets away from the area of operation.**

- Always set the throttle to the Fast position when throwing snow.
- If the engine slows down under a load or the wheels slip, shift the snowthrower into a lower gear.
- If the front of the snowthrower rides up, shift the snowthrower into a lower gear. If the front continues to ride up, lift up on the handles.
- **The pivoting scraper on the snowthrower is not recommended for use on gravel surfaces.** But if you must use the snowthrower on a gravel surface, adjust the skids further down to prevent the pivoting scraper from picking up rocks.

# Maintenance

**Note:** Determine the left and right sides of the machine from the normal operating position.

## Recommended Maintenance Schedule(s)

| Maintenance Service Interval | Maintenance Procedure |
|---|---|
| After the first 2 hours | • Inspect the traction cable and adjust it if necessary.<br>• Inspect the auger/impeller cable and adjust it if necessary. |
| After the first 5 hours | • Change the engine oil. |
| Before each use or daily | • Check the engine oil level and add oil if necessary. |
| Every 50 hours | • Change the engine oil. Change the engine oil every 25 operating hours when operating the engine under a heavy load. |
| Every 100 hours | • Replace the spark plug. |
| Yearly | • Check the skids and the scraper and adjust them if necessary.<br>• Check the skids and adjust them if necessary.<br>• Inspect the traction cable and adjust or replace it if necessary.<br>• Inspect the auger/impeller cable and adjust or replace it if necessary.<br>• Check the auger gearbox oil and add oil if necessary.<br>• Lubricate the hex shaft. |
| Yearly or before storage | • Check the air pressure in the tires and inflate them to 17–20 psi (116–137 kPa).<br>• Drain the gasoline and run the engine to dry out the fuel tank and the carburetor at the end of the season.<br>• Have an Authorized Service Dealer inspect and replace the traction drive belt and/or the auger/impeller drive belt, if necessary. |

**Important: You can find more information about maintaining and servicing your snowthrower at www.Toro.com.**

**Important: Refer to your engine operator's manual for additional maintenance procedures. For engine adjustments, repairs, or warranty service not covered in this manual, contact an Authorized Briggs & Stratton Servicing Dealer.**

# Preparing for Maintenance

1. Move the snowthrower to a level surface.
2. Stop the engine and wait for all moving parts to stop.
3. Disconnect the spark plug wire. Refer to Replacing the Spark Plug.

# Checking the Engine Oil Level

**Service Interval:** Before each use or daily—Check the engine oil level and add oil if necessary.

1. Remove the dipstick, wipe it clean, then fully install the dipstick.
2. Remove the dipstick and check the oil level (Figure 41). If the oil level is below the Add mark on the dipstick, add oil. Refer to Filling the Engine with Oil.

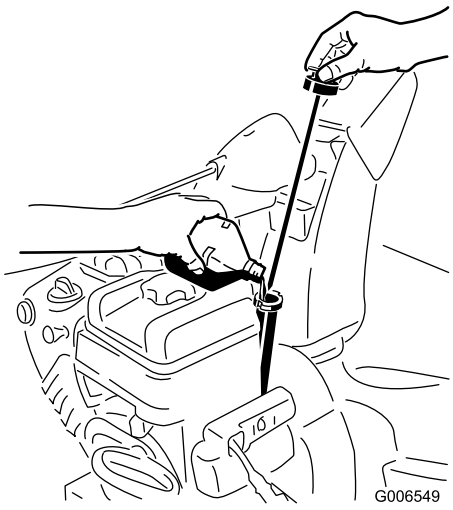


**Figure 41**

# Checking and Adjusting the Skids and Scraper

**Service Interval:** Yearly—Check the skids and the scraper and adjust them if necessary.

**All models except model 38657**

Check the skids and the scraper to ensure that the auger does not contact the paved or gravel surface. Adjust the skids and the scraper as needed to compensate for wear.

1. Check the tire pressure. Refer to Checking the Tire Pressure.
2. Loosen the nuts that secure both skids to the auger sides until the skids slide up and down easily (Figure 42).

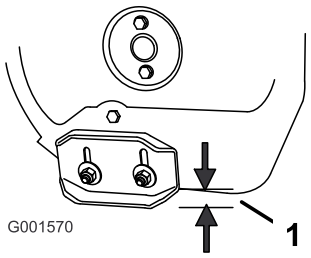


**Figure 42**

1. 1/2 inch (1.3 cm)

3. Support the side plates so that they are **at least** 1/2 inch (1.3 cm) above a level surface.

   **Important: The auger blades must be supported above the ground by the skids.**

4. Ensure that the scraper is 1/8 inch (3 mm) above and parallel to a level surface.

   **Note:** If the pavement is cracked, rough, or uneven, adjust the skids to raise the scraper. For gravel surfaces, adjust the skids further down to prevent the snowthrower from picking up rocks.

5. Move the skids down until they are even with the ground.
6. Firmly tighten the nuts that secure both skids to the auger sides.

   **Note:** To quickly adjust the skids if they loosen, support the scraper 1/8 inch (3 mm) off the pavement, then adjust the skids down to the pavement.

   **Note:** If the skids become excessively worn, you can turn them over and set the unused side toward the pavement.

# Checking and Adjusting the Skids

**Service Interval:** Yearly—Check the skids and adjust them if necessary.

**Model 38657 only**

Check the skids to ensure that the auger does not contact the paved or gravel surface. Adjust the skids as needed to compensate for wear.

1. Check the tire pressure. Refer to Checking the Tire Pressure.
2. Move the snowthrower to a level surface.
3. Loosen the nuts that secure both skids to the auger sides until the skids slide up and down easily (Figure 43).

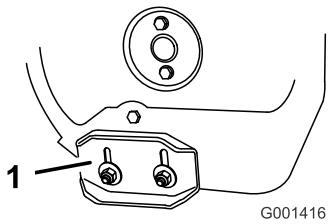


**Figure 43**

1. Skid

4. Push down on the handles to allow the pivoting scraper to move fully forward, then set the front of the snowthrower down so that the front edge of the pivoting scraper contacts the ground (Figure 44).

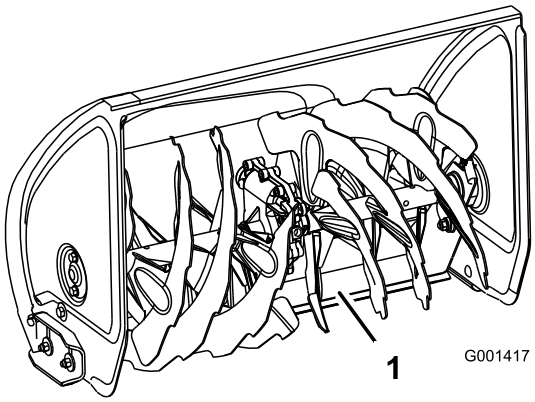


**Figure 44**

1. Pivoting scraper

5. Move the skids down until they are even with the ground.

   **Note:** For a smooth surface, you can set the skids slightly higher to increase the scraping action, but set the skids far enough down to prevent the auger blades from contacting the ground.

   **Note: The pivoting scraper on the snowthrower is not recommended for use on gravel surfaces.** But if you must use the snowthrower on a gravel surface, adjust the skids further down to prevent the pivoting scraper from picking up rocks.

6. Firmly tighten the nuts that secure both skids to the auger sides.

   **Note:** If the skids become excessively worn, you can turn them over and set the unused side toward the pavement.

# Checking and Adjusting the Traction Cable

**Service Interval:** After the first 2 hours—Inspect the traction cable and adjust it if necessary.

Yearly—Inspect the traction cable and adjust or replace it if necessary.

If the snowthrower does not drive in the forward or reverse speeds or it drives when you release the traction lever, adjust the traction cable.

With the traction lever disengaged, check the pin in the elongated slot in the left side of the snowthrower above the tire. There should be a gap of 1/32 to 1/16 inch (1 to 1.5 mm) from the front of the slot to the front edge of the pin (Figure 45).

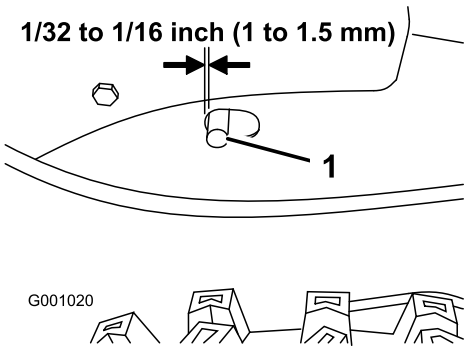


**Figure 45**

1. Pin

If the left hand (traction) cable is not properly adjusted, do the following steps:

1. Loosen the jam nut.
2. Loosen or tighten the turnbuckle to adjust the pin until it is the proper gap from the front edge of the slot.
3. Tighten the jam nut (Figure 46).

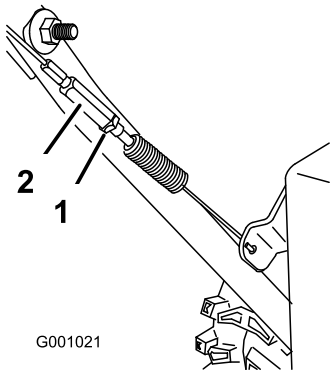


**Figure 46**

1. Jam nut
2. Turnbuckle

# Checking and Adjusting the Auger/Impeller Cable

**Service Interval:** After the first 2 hours—Inspect the auger/impeller cable and adjust it if necessary.

Yearly—Inspect the auger/impeller cable and adjust or replace it if necessary.

1. Remove the 2 screws from the right side of the belt cover as shown.
2. Lift up the right side of the belt cover (Figure 47).

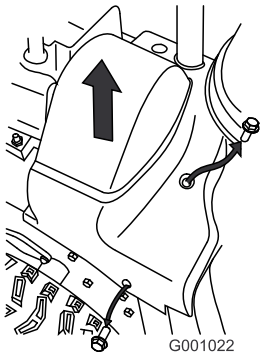


**Figure 47**

3. With the auger/impeller lever disengaged, ensure that the gap between the auger clutch assembly and the tab is 1/16 inch (1.5 mm) (Figure 48).

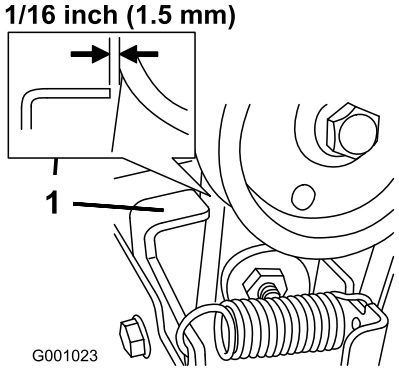


**Figure 48**

1. Tab

4. If the auger/impeller cable is not properly adjusted, do the following steps:
5. Loosen the jam nut (Figure 49).

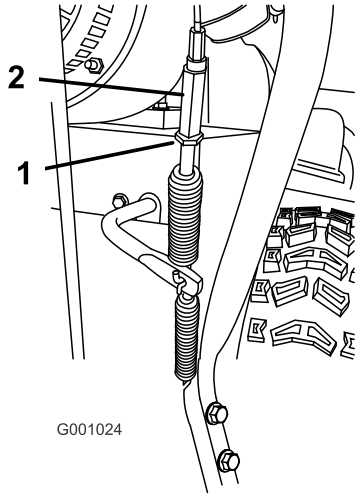


**Figure 49**

1. Jam nut
2. Turnbuckle

6. Loosen or tighten the turnbuckle that adjusts the tension on the cable (Figure 49).
7. Adjust the turnbuckle until you obtain the proper gap.
8. Tighten the jam nut.
9. Insert the 2 screws you previously removed on the belt cover.
10. If the auger/impeller cable is properly adjusted but a problem remains, contact an Authorized Service Dealer.

# Checking the Auger Gearbox Oil Level

**Service Interval:** Yearly—Check the auger gearbox oil and add oil if necessary.

1. Move the snowthrower to a level surface.
2. Clean the area around the pipe plug (Figure 50).

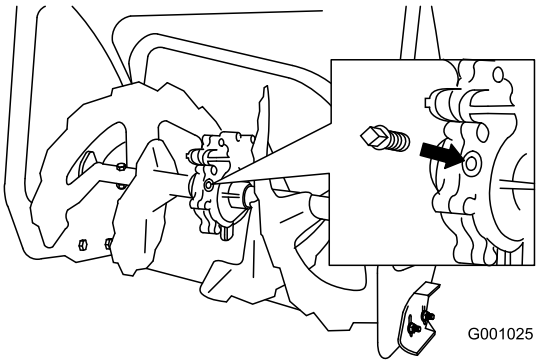


**Figure 50**

3. Remove the pipe plug from the gearbox.
4. Check the oil level in the gearbox. The oil should be at the point of overflowing at the filler opening.

5. If the oil level is low, add GL-5 or GL-6, SAE 85-95 EP transmission oil to the gearbox until the point of overflow.

   **Note:** Do not use synthetic oil.

6. Install the pipe plug in the gearbox.

# Changing the Engine Oil

**Service Interval:** After the first 5 hours—Change the engine oil.

Every 50 hours—Change the engine oil. Change the engine oil every 25 operating hours when operating the engine under a heavy load.

If possible, run the engine just before changing the oil because warm oil flows better and carries more contaminants.

Use automotive detergent oil with an API service classification of SF, SG, SH, SJ, SL, or higher. Refer to your engine owner's manual.

Use Figure 51 below to select the best oil viscosity for the outdoor temperature range expected:

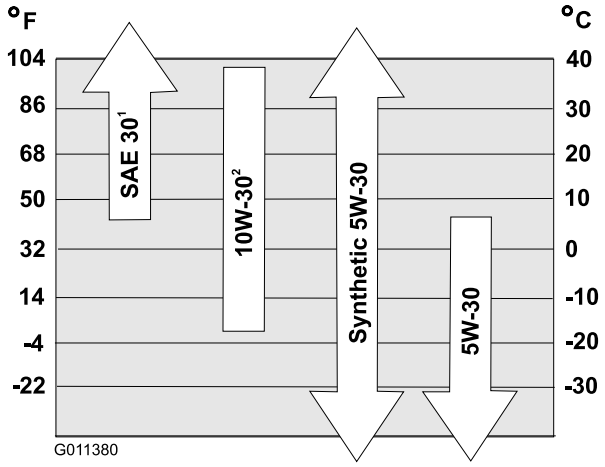


**Figure 51**

1. Using SAE 30 at outdoor temperatures below 40°F (4°C) will result in hard starting.
2. Using 10W-30 at outdoor temperatures above 80°F (27°C) may result in increased oil consumption; therefore, check the oil level more frequently in these circumstances.

**Engine Oil Capacities**

**Engine Oil Capacities (cont'd.)**

| Model | Engine Oil Capacity |
|---|---|
| 38597 | 18 to 20 oz. (0.53 to 0.59 l) |
| 38629 | |
| 38637 | |
| 38639 | |
| 38657 | 26 to 28 oz. (0.77 to 0.83 l) |

1. Clean the area around the oil drain cap (Figure 52).

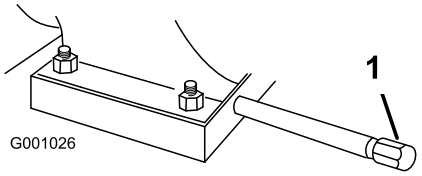


**Figure 52**

1. Oil drain cap

2. Slide an oil drain pan under the drain extension and remove the oil drain cap.
3. Drain the oil.

   **Note:** Dispose of the used oil properly at a local recycling center.

4. Install the oil drain cap.
5. Fill the crankcase with oil. Refer to Filling the Engine Crankcase with Oil.

# Lubricating the Hex Shaft

**Service Interval:** Yearly

Lightly lubricate the hex shaft yearly with automotive engine oil (Figure 53).

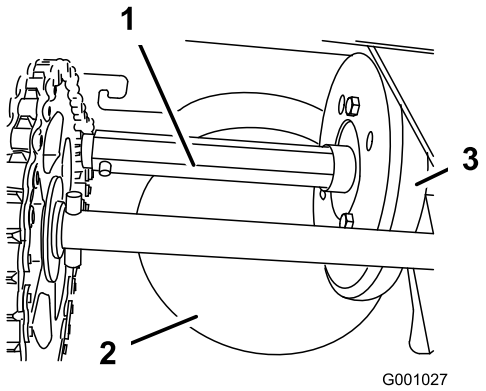


**Figure 53**

1. Hex shaft
2. Aluminum friction plate
3. Rubber wheel

---

**Important: Do not get oil on the rubber wheel or the aluminum friction drive plate because the traction drive will slip (Figure 53).**

1. Drain the gasoline from the fuel tank.
2. Tip the snowthrower forward onto its auger housing and block it so that it cannot fall.
3. Remove the back cover (Figure 54).

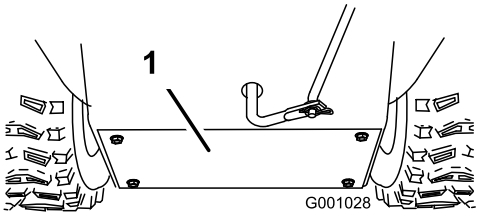


**Figure 54**

1. Back cover

---

4. Move the speed selector lever to Position R2.
5. Dip your finger in automotive engine oil and **lightly** lubricate hex shaft.
6. Move the speed selector lever to Position 6.
7. Lubricate the other end of the hex shaft.
8. Move the speed selector lever forward and rearward a few times.
9. Install the back cover and return the snowthrower to the operating position.

# Replacing the Spark Plug

**Service Interval:** Every 100 hours—Replace the spark plug.

Use a **Champion QC12YC** or equivalent spark plug.

**Note:** To access the spark plug, you must first remove the upper snow hood (Figure 55).

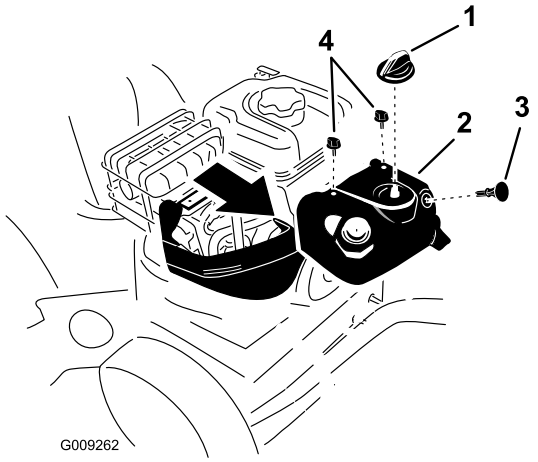


**Figure 55**

1. Choke knob
2. Upper snow hood
3. Ignition key
4. Screw (2)

---

1. Remove the choke knob and the ignition key (Figure 55).
2. Remove the 2 screws that secure the upper snow hood to the snowthrower (Figure 55).
3. **Slowly** remove the upper snow hood, ensuring that the primer bulb hose and the ignition wire remain connected.
4. Remove the bracket thumb screw and the bracket (Figure 56).

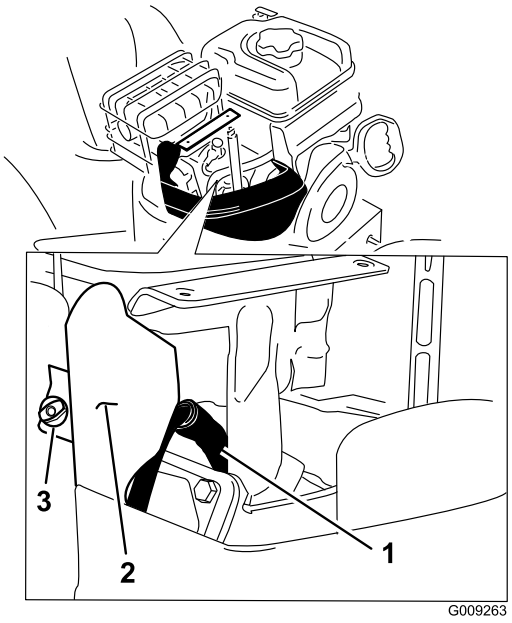


**Figure 56**

1. Spark-plug wire
2. Bracket
3. Thumb screw

5. Clean around the base of the spark plug (Figure 56).
6. Remove and discard the old spark plug.

   **Note:** You will need a ratchet wrench extension to remove the spark plug.
7. Set the gap between the electrodes on a new spark plug at 0.030 inch (0.76 mm) (Figure 57).

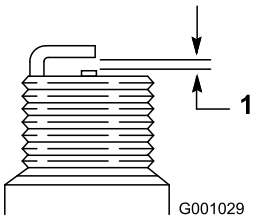


**Figure 57**

1. 0.030 inch (0.76 mm)

8. Install the new spark plug and tighten it firmly.
9. Install the bracket with the thumb screw that you removed in step 4.
10. Ensure that the primer bulb hose and the ignition wire are connected and clear of the carburetor bracket.
11. Secure the upper snow hood to the snowthrower with the 2 screws that you previously removed.
12. Align the tab on the choke control knob with the slot on the upper snow hood.
13. Connect the choke control knob to the choke shaft on the carburetor.

# Adjusting the Discharge Chute Latch

If the discharge chute does not lock into the desired position or does not unlock so that you can move it to another position, adjust the discharge chute latch.

1. Remove the fastener on the gear cover (Figure 58), lift the front of the cover up, and slide it back and out of the way.

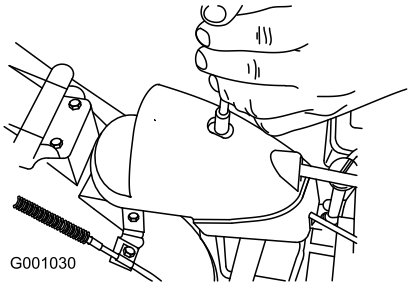


**Figure 58**

2. Loosen the bolt on the cable clamp (Figure 59).

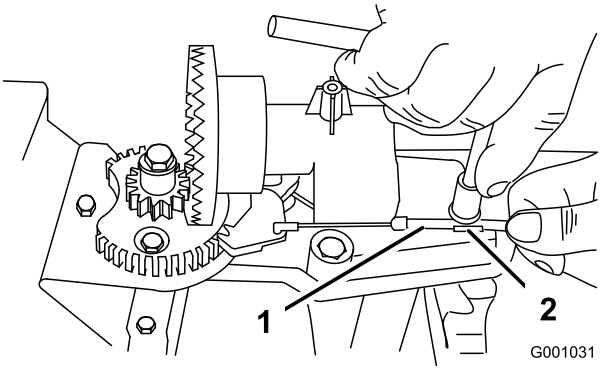


**Figure 59**

1. Cable conduit
2. Cable clamp

3. Grasp the cable conduit and move it toward the front of the machine until the discharge chute latch fully engages the gear teeth (Figure 59 and Figure 60).

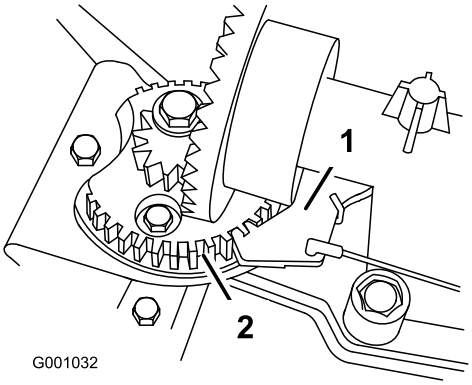


**Figure 60**

1. Discharge chute latch 2. Gear teeth

**Note:** The latch is spring loaded and will naturally move into the teeth of the gear (Figure 60).

4. Remove any slack in the cable by pulling the cable conduit rearward.
5. Tighten the bolt on the cable clamp.
6. Install and secure the gear cover.

# Replacing the Drive Belts

If the auger/impeller drive belt or the traction drive belt becomes worn, oil-soaked, or otherwise damaged, go to www.Toro.com for additional service information or have an Authorized Service Dealer replace the belt.

# Replacing the Headlight Bulb

**Models 38637, 38639, and 38657 only**

Use a **GE 892 16W halogen light bulb.** Do not touch the bulb with your hands or allow dirt or moisture to come into contact with the bulb.

1. Remove the wire connector from the back of the headlight (Figure 61).

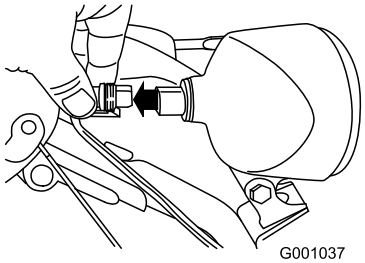


**Figure 61**

2. Turn the base of the bulb counterclockwise until it stops (Figure 62).

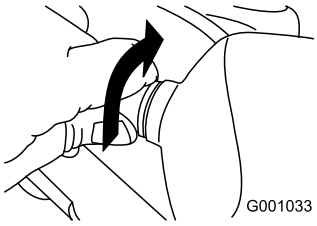


**Figure 62**

3. Remove the bulb straight out from the back of the headlight (Figure 63).

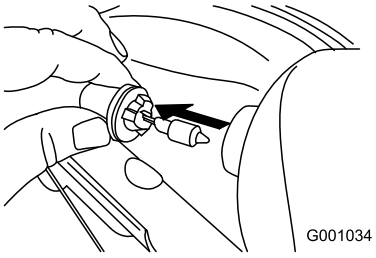


**Figure 63**

4. Insert a new bulb into the back of the headlight (Figure 64).

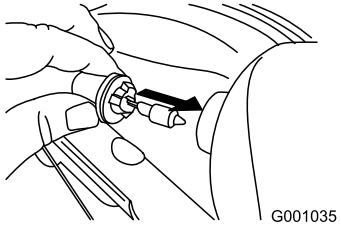


**Figure 64**

5. Turn the base of the bulb clockwise until it is snug (Figure 65).

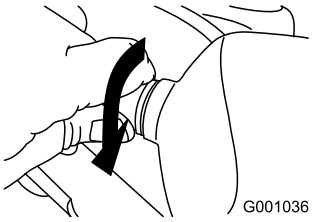


**Figure 65**

6. Insert the wire connector straight into the back of the headlight until it is securely in place (Figure 66).

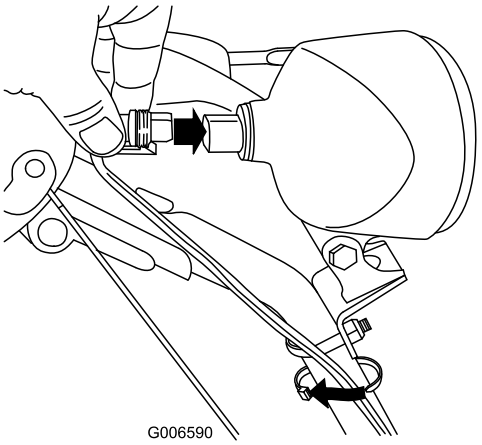


**Figure 66**

# Storage

- **Gasoline vapors can explode.**
- **Do not store gasoline more than 30 days.**
- **Do not store the snowthrower in an enclosure near an open flame.**
- **Allow the engine to cool before storing it.**

## Preparing the Snowthrower for Storage

1. On the last refueling of the year, add fuel stabilizer to fresh fuel as directed by the engine manufacturer.
2. Run the engine for 10 minutes to distribute the conditioned fuel through the fuel system.
3. Loosen the hose clamp that secures the fuel line to the valve and slide the fuel line off the fuel shutoff valve.
4. Open the fuel shutoff valve and allow the fuel to drain out of the fuel tank into an approved fuel container.
5. Install the fuel line onto the fuel shutoff valve and secure it with a hose clamp.
6. Run the snowthrower until the engine stops from running out of fuel.
7. Prime the engine and start it again.
8. Allow the engine to run until it stops. When you can no longer start the engine, it is sufficiently dry.
9. Stop the engine and allow it to cool.
10. Remove the ignition key.
11. Disconnect the spark plug wire.
12. Remove the spark plug, add 1 oz. (30 ml) of oil through the spark plug hole, and pull the starter rope **slowly** several times to distribute oil throughout the cylinder to prevent cylinder corrosion during the off-season.
13. Loosely install the spark plug.
14. Dispose of any unused fuel properly. Recycle it according to local codes, or use it in your automobile.

    **Note:** Do not store stabilized fuel for more than 90 days.
15. Clean the snowthrower thoroughly.
16. Touch up chipped surfaces with paint available from an Authorized Service Dealer. Sand affected areas before painting, and use a rust preventative to prevent the metal parts from rusting.
17. Tighten all loose screws, bolts, and locknuts. Repair or replace any damaged parts.
18. Cover the snowthrower and store it in a clean, dry place out of the reach of children. Allow the engine to cool before storing it in any enclosure.

## Removing the Snowthrower from Storage

1. Remove the spark plug and spin the engine rapidly using the starter to blow the excess oil from the cylinder.
2. Install the spark plug by hand and then torque it to 15 ft-lb (20.4 N-m).
3. Connect the spark plug wire.
4. Perform the annual maintenance procedures as given in the Recommended Maintenance Schedule.

# Troubleshooting

| Problem | Possible Cause | Corrective Action |
|---|---|---|
| Electric starter does not turn (electric-start models only) | 1. The power cord is disconnected at the outlet or the snowthrower.<br>2. The power cord is worn, corroded, or damaged.<br>3. The power outlet is not energized. | 1. Connect the power cord to the outlet and/or the snowthrower.<br>2. Replace the power cord.<br>3. Have a qualified electrician energize the outlet. |
| Engine does not start or starts hard | 1. The key is not in the ignition or is in the Stop position.<br>2. The choke is in the Off position and the primer has not been pressed.<br>3. The fuel shutoff valve is not open.<br>4. The throttle is not in the Fast position.<br>5. The fuel tank is empty or the fuel system contains stale fuel.<br>6. The spark plug wire is loose or disconnected.<br>7. The spark plug is pitted, fouled, or the gap is incorrect.<br>8. The fuel vent cap is restricted.<br>9. The engine oil level in the engine crankcase is too low or too high. | 1. Insert the key into the ignition and turn it to the On position.<br>2. Move the choke to the On position and press the primer 3 times.<br>3. Open the fuel shutoff valve.<br>4. Move the throttle to the Fast position.<br>5. Drain and/or fill the fuel tank with fresh gasoline (not more than 30 days old). If the problem persists, contact an Authorized Service Dealer.<br>6. Connect the wire to the spark plug.<br>7. Check the spark plug and adjust the gap if necessary. Replace the spark plug if it is pitted, fouled, or cracked.<br>8. Remove the vent restriction or replace the fuel cap.<br>9. Add or drain oil to adjust the oil level in the engine crankcase to the Full mark on the dipstick. |
| Engine runs rough | 1. The choke is in the On position.<br>2. The fuel shutoff valve is not completely open.<br>3. The fuel tank is nearly empty or contains stale fuel.<br>4. The spark plug wire is loose.<br>5. The spark plug is pitted, fouled, or the gap is incorrect.<br>6. The engine oil level in the engine crankcase is too low or too high. | 1. Move the choke to the Off position.<br>2. Open the fuel shutoff valve.<br>3. Drain and fill the fuel tank with fresh gasoline (not more than 30 days old). If the problem persists, contact an Authorized Service Dealer.<br>4. Connect the wire to the spark plug.<br>5. Check the spark plug and adjust the gap if necessary. Replace the spark plug if it is pitted, fouled, or cracked.<br>6. Add or drain oil to adjust the oil level in the engine crankcase to the Full mark on the dipstick. |
| Engine runs, but the snowthrower discharges snow poorly or not at all | 1. The throttle is not in the Fast position when throwing snow.<br>2. The snowthrower is moving too fast to clear the snow.<br>3. You are trying to remove too much snow per swath.<br>4. You are trying to remove extremely heavy or wet snow.<br>5. The discharge chute is plugged.<br>6. The auger/impeller drive belt is loose or is off the pulley. | 1. Move the throttle to the Fast position.<br>2. Shift the snowthrower into a lower gear.<br>3. Reduce the amount of snow removed per swath.<br>4. Don’t overload the snowthrower with extremely heavy or wet snow.<br>5. Unclog the discharge chute.<br>6. Install and/or adjust the auger/impeller drive belt; refer to www.Toro.com for servicing information or take the snowthrower to an Authorized Service Dealer. |

| Problem | Possible Cause | Corrective Action |
|---|---|---|
| | 7. The auger/impeller drive belt is worn or broken. | 7. Replace the auger/impeller drive belt; refer to www.Toro.com for servicing information or take the snowthrower to an Authorized Service Dealer. |
| Discharge chute either does not lock into place or does not move | 1. The discharge chute latch is not properly adjusted. | 1. Adjust the discharge chute latch. |
| Snowthrower does not properly clear the snow off the surface | 1. The skids and/or scraper are not properly adjusted.<br>2. The pressure in the tires is not equal. | 1. Adjust the skids and/or the scraper.<br>2. Check and adjust the pressure in one or both tires. |

# Notes:

# International Distributor List

| Distributor: | Country: | Phone Number: |
|---|---|---|
| Atlantis Su ve Sulama Sisstemleri Lt | Turkey | 90 216 344 86 74 |
| Balama Prima Engineering Equip | Hong Kong | 852 2155 2163 |
| B-Ray Corporation | Korea | 82 32 551 2076 |
| Casco Sales Company | Puerto Rico | 787 788 8383 |
| Ceres S.A | Costa Rica | 506 239 1138 |
| CSSC Turf Equipment (pvt) Ltd | Sri Lanka | 94 11 2746100 |
| Cyril Johnston & Co | Northern Ireland | 44 2890 813 121 |
| Equiver | Mexico | 52 55 539 95444 |
| Femco S.A. | Guatemala | 502 442 3277 |
| G.Y.K. Company ltd. | Japan | 81 726 325 861 |
| Geomechaniki of Athens | Greece | 30 10 935 0054 |
| Guandong Golden Star | China | 86 20 876 51338 |
| Hako Ground and Garden | Sweden | 46 35 10 0000 |
| Hako Ground and Garden | Norway | 47 22 90 7760 |
| Hayter Limited (U.K.) | United Kingdom | 44 1279 723 444 |
| Hydroturf Int. Co Dubai | United Arab Emirates | 97 14 347 9479 |
| Hydroturf Egypt LLC | Egypt | 202 519 4308 |
| Ibea S.p.A. | Italy | 39 0331 853611 |
| Irriamc | Portugal | 351 21 238 8260 |
| Irrigation Products Int'l Pvt Ltd | India | 86 22 83960789 |
| Jean Heybroek b.v. | Netherlands | 31 30 639 4611 |
| Lely (U.K.) Limited | United Kingdom | 44 1480 226 800 |
| Maquiver S.A. | Colombia | 57 1 236 4079 |
| Maruyama Mfg. Co. Inc. | Japan | 81 3 3252 2285 |
| Metra Kft | Hungary | 36 1 326 3880 |
| Mountfield a.s. | Czech Republic | 420 255 704 220 |
| Munditol S.A. | Argentina | 54 11 4 821 9999 |
| Oslinger Turf Equipment SA | Ecuador | 593 4 239 6970 |
| Oy Hako Ground and Garden Ab | Finland | 358 987 00733 |
| Parkland Products Ltd | New Zealand | 64 3 34 93760 |
| Prochaska & Cie | Austria | 43 1 278 5100 |
| RT Cohen 2004 Ltd | Israel | 972 986 17979 |
| Riversa | Spain | 34 9 52 83 7500 |
| Roth Motorgerate GmBh & Co | Germany | 49 7144 2050 |
| Sc Svend Carlsen A/S | Denmark | 45 66 109 200 |
| Solvert S.A.S | France | 33 1 30 81 77 00 |
| Spypros Stavrinides Limited | Cyprus | 357 22 434131 |
| Surge Systems India Limited | India | 91 1 292299901 |
| T-Markt Logistics Ltd | Hungary | 36 26 525 500 |
| Toro Australia | Australia | 61 3 9580 7355 |
| Toro Europe BVBA | Belgium | 32 14 562 960 |

# The Toro Warranty

## Conditions and Products Covered

The Toro® Company and its affiliate, Toro Warranty Company, pursuant to an agreement between them, jointly promises to the original purchaser* to repair any Toro Product used for normal residential purposes* if defective in materials or workmanship. The following time periods apply from the date of original purchase:

| Products | Warranty Period |
|---|---|
| Walk Power Mowers | 2-year limited warranty |
| Rear Engine Riders | 2-year limited warranty |
| Lawn & Garden Tractors | 2-year limited warranty |
| Electric Hand Held Products | 2-year limited warranty |
| Snowthrowers | 2-year limited warranty |
| Consumer Zero Turn | 2-year limited warranty |

* "Original purchaser" means use the person who originally purchased Toro products.

* "Normal residential purposes" means use of the product on the same lot as your home. Use at more than one location is considered commercial use, and the commercial use warranty would apply.

## Limited Warranty for Commercial Use

Toro Consumer Products and attachments used for commercial, institutional, or rental use are warranted against defects in materials or workmanship for the following time periods from the date of original purchase:

| Products | Warranty Period |
|---|---|
| Walk Power Mowers | 90 day warranty |
| Rear Engine Riders | 90 day warranty |
| Lawn & Garden Tractors | 90 day warranty |
| Electric Hand Held Products | 90 day warranty |
| Snowthrowers | 90 day warranty |
| Consumer Zero Turn | 45 day warranty |

## Instructions for Obtaining Warranty Service

If you think that your Toro Product contains a defect in materials or workmanship, follow this procedure:

1. Contact your seller to arrange service of the product. If for any reason it is impossible for you to contact your seller, you may contact any Toro Authorized Distributor to arrange service.
2. Bring the product and your proof of purchase (sales receipt) to your seller or the Service Dealer.

If for any reason you are dissatisfied with the Service Dealer's analysis or with the assistance provided, contact the Toro importer or contact us at:

Customer Care Department, Consumer Division
Toro Warranty Company
8111 Lyndale Avenue South
Bloomington, MN 55420-1196
Manager: Technical Product Support: 001-952-887-8248

See attached Distributor List

## Owner Responsibilities

You must maintain your Toro Product by following the maintenance procedures described in the operator's manual. Such routine maintenance, whether performed by a dealer or by you, is at your expense.

## Items and Conditions Not Covered

This express warranty does not cover:

- Cost of regular maintenance service or parts, such as filters, fuel, lubricants, tune-up parts, blade sharpening, brake and clutch adjustments.
- Any product or part which has been altered or misused or required replacement or repair due to normal wear, accidents, or lack of proper maintenance.
- Repairs necessary due to improper fuel, contaminants in the fuel system, or failure to properly prepare the fuel system prior to any period of non-use over three months.
- Engine and transmission. These are covered by the appropriate manufacturer's guarantees with separate terms and conditions.

All repairs covered by this warranty must be performed by an Authorized Toro Service Dealer using Toro approved replacement parts.

## General Conditions

The purchaser is covered by the national laws of each country. The rights to which the purchaser is entitled with the support of these laws are not restricted by this warranty.