FORM NO. 3316–859

TORO®

MODEL NO. 20801B–4900001 & UP

PARTS CATALOG

# 48cm RECYCLER® MOWER

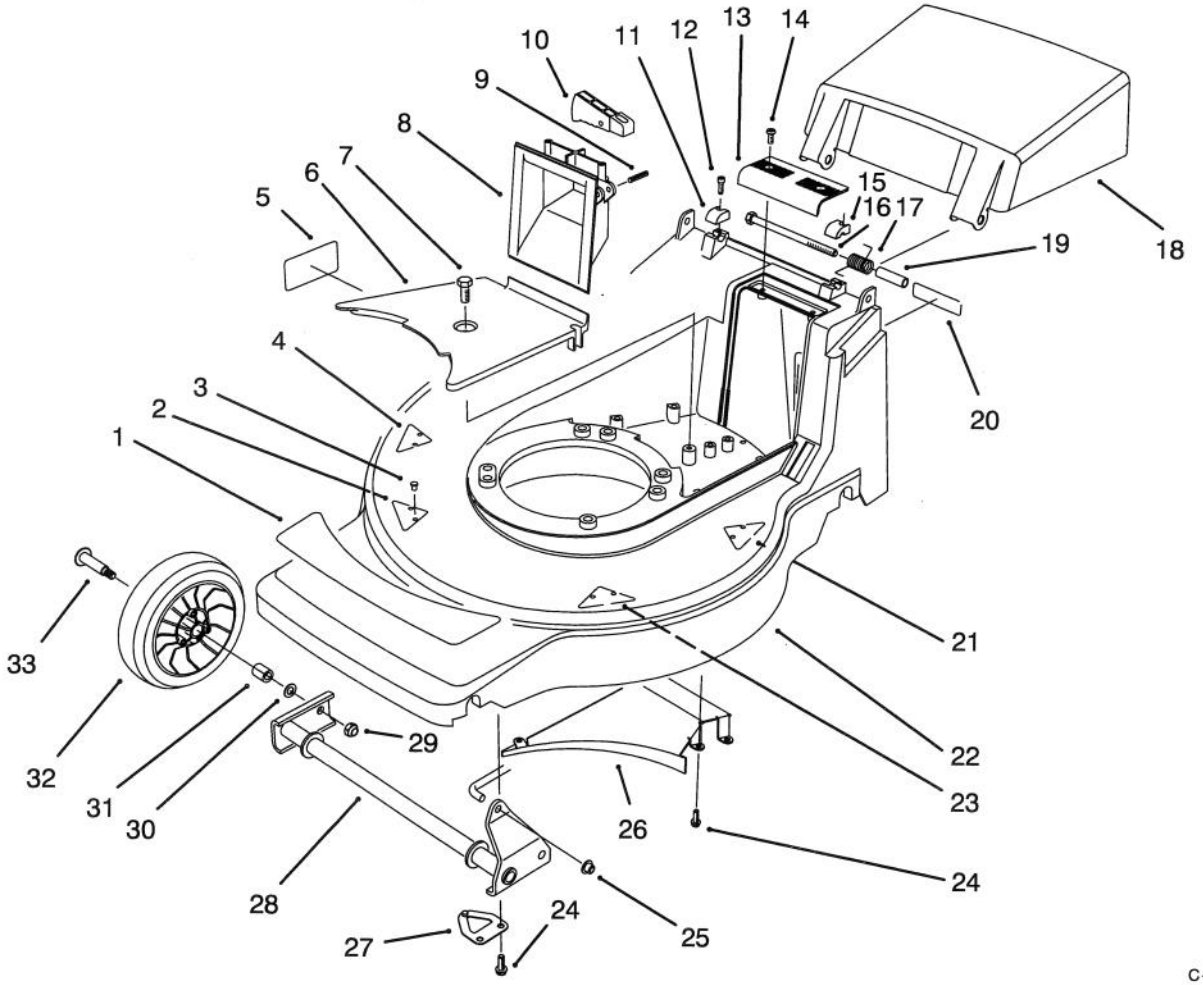


C–2003

## HOUSING ASSEMBLY

| Ref. No. | Part No. | Description | No. Used |
|---|---|---|---|
| 1 | 92–7863 | Decal – Deck | 1 |
| 2 | 71–8920 | Kicker – Front Right | 1 |
| 3 | 32144–111 | Screw – Phillips Hd. | 8 |
| 4 | 71–9230 | Kicker – Rear Right | 1 |
| 5 | 92–9077 | Decal – DIN | 1 |
| 6 | 71–7920 | Cover – Belt | 1 |
| 7 | 32144–70 | Screw – Tapping | 1 |
| 8 | 71–7870 | Grip – Lower | 1 |
| 9 | 3284–5 | Pin – Groove | 1 |
| 10 | 71–7930 | Trigger – H.O.C. | 1 |
| 11 | 71–7910 | Cap – Bolt Hinge R.H. | 1 |
| 12 | 65–5210 | Screw – Thread Forming | 2 |
| 13 | 71–7860 | Grip – Upper | 1 |
| 14 | 32144–97 | Screw – Phillips Hd. | 2 |
| 15 | 71–7900 | Cap – Bolt Hinge L.H. | 1 |
| 16 | 322–29 | Screw – Hex Hd. Cap | 2 |
| 17 | 71–9840 | Spring – Door | 2 |
| 18 | 71–9800 | Door – Discharge | 1 |

| Ref. No. | Part No. | Description | No. Used |
|---|---|---|---|
| 19 | 71–8580 | Spacer – Door | 2 |
| 20 | 66–0680 | Decal – French Regulation | 1 |
| 21 | 71–9250 | Kicker – Rear Left | 1 |
| 22 | 16–5989 | Housing – Deck (Incl. Ref. #2–5, 20, 21, & 23) | 1 |
| 23 | 71–9440 | Kicker – Front Left | 1 |
| 24 | 32144–4 | Screw – Tapping | 8 |
| 25 | 32112–11 | Nut – Push | 1 |
| 26 | 71–7990 | Ramp – Discharge | 1 |
| 27 | 71–8830 | Retainer – Shaft | 2 |
| 28 | 71–7820 | Pivot – Front | 1 |
| 29 | 3296–5 | Nut – Lock | 2 |
| 30 | 40–1940 | Washer | 2 |
| 31 | 27–6250 | Bushing | 2 |
| 32 | 46–1113 | Wheel & Tire Assembly 7" | 2 |
| 33 | 27–6230 | Bolt – Wheel | 2 |

Copyright 1994 The Toro Company
All Rights Reserved

TPS

3316–859

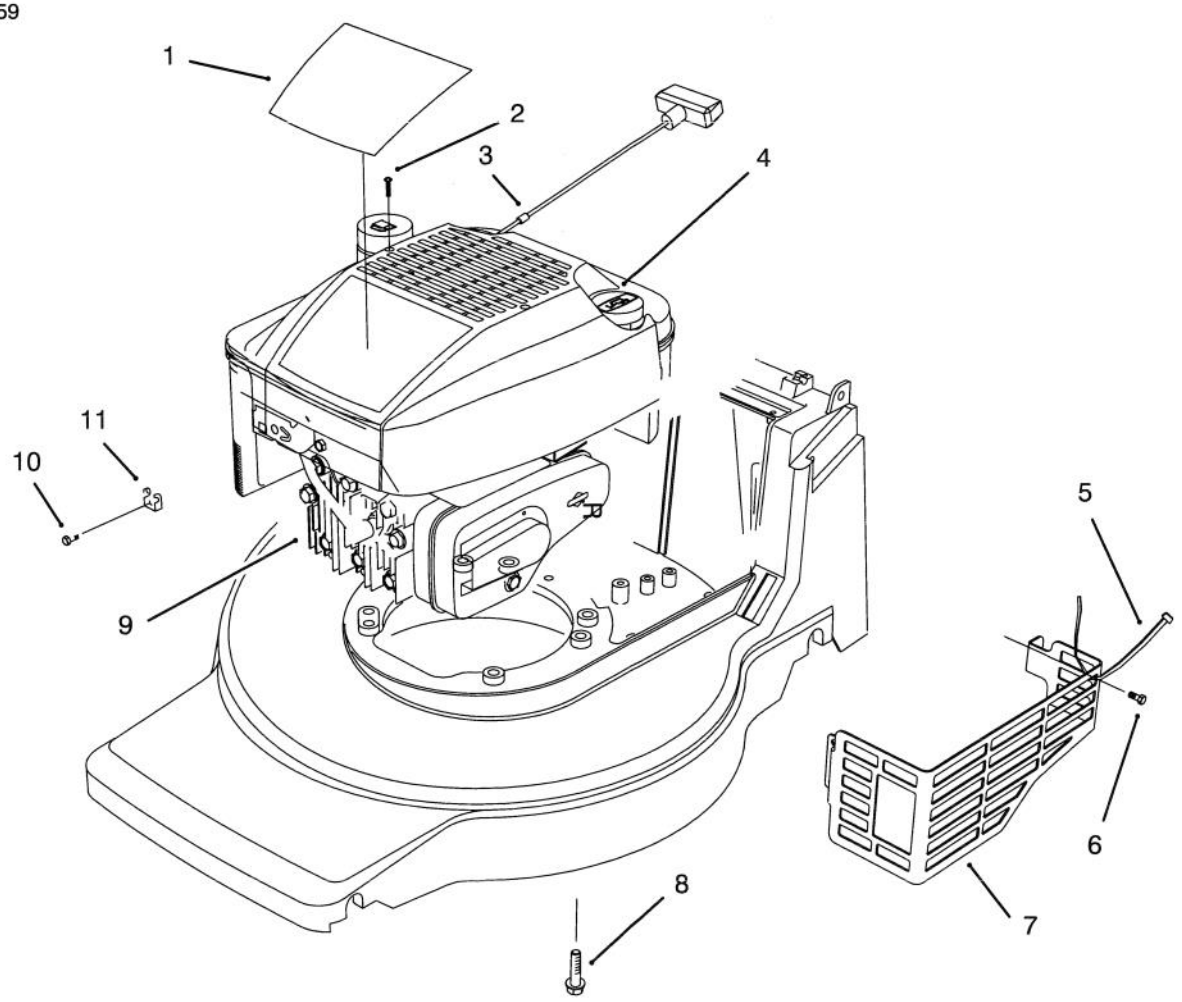


C–2004

# ENGINE ASSEMBLY

| Ref. No. | Part No. | Description | No. Used |
|---|---|---|---|
| 1 | 92–7864 | Decal – Engine | 1 |
| 2 | 92–7887 | Screw – Mounting | 2 |
| 3 | 2210–316 | Stop – Rope | 1 |
| 4 | 92–7886 | Shroud – Engine | 1 |
| 5 | 3290–378 | Tie – Cable | 1 |
| 6 | 32144–73 | Screw – Hex Washer Hd. Thread Forming | 3 |

| Ref. No. | Part No. | Description | No. Used |
|---|---|---|---|
| 7 | 92–7852 | Shield – Muffler | 1 |
| 8 | 32144–102 | Screw – Engine | 3 |
| 9 | | Engine | 1 |
| 10 | 86–7990 | Screw – Clamp | 1 |
| 11 | 2210–249 | Clamp – Casing | 1 |

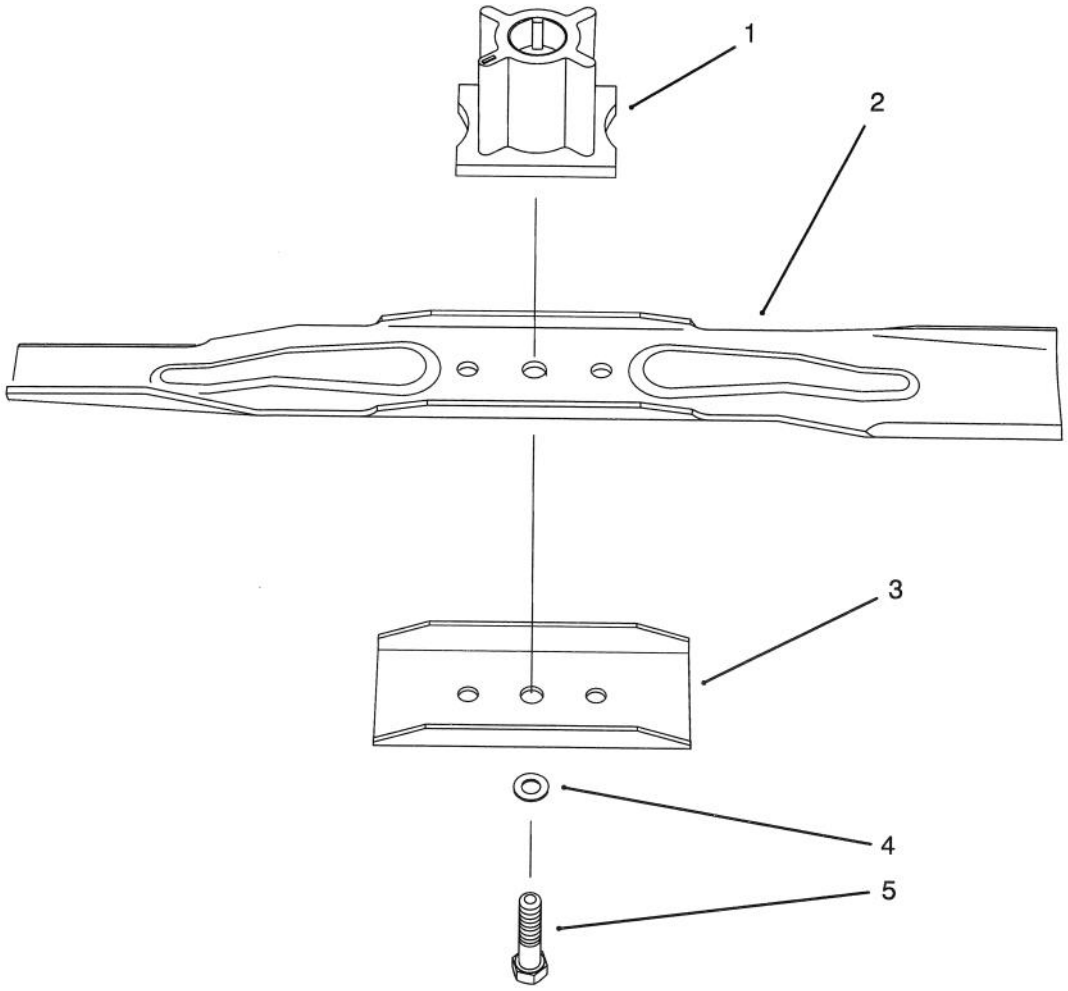


C–2005

# BLADE ASSEMBLY

| Ref. No. | Part No. | Description | No. Used |
|---|---|---|---|
| 1 | 71–7940 | Retainer – Blade | 1 |
| 2 | 71–9260 | Blade – 48cm Recycler | 1 |
| 3 | 80–0510 | Stiffener – Blade | 1 |

| Ref. No. | Part No. | Description | No. Used |
|---|---|---|---|
| 4 | 3253–22 | Washer – Lock | 1 |
| 5 | 26–0672 | Bolt – Blade | 1 |

3316–859

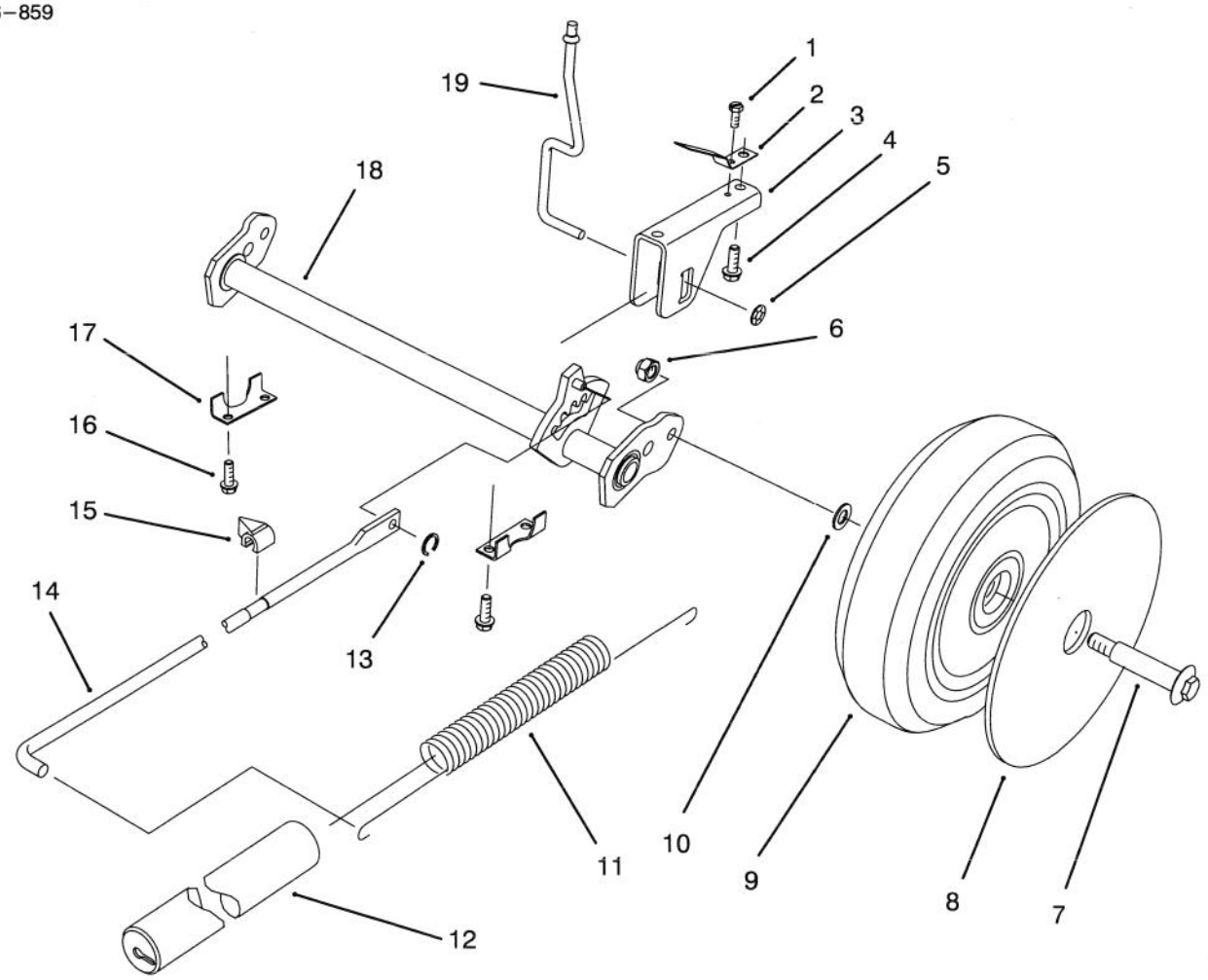


C–2006

# REAR AXLE ASSEMBLY

| Ref. No. | Part No. | Description | No. Used |
|---|---|---|---|
| 1 | 32144–31 | Screw – Tapping | 1 |
| 2 | 71–8060 | Spring – Trigger Ret. | 2 |
| 3 | 71–8080 | Saddle – H.O.C. | 1 |
| 4 | 63–8590 | Screw | 2 |
| 5 | 32112–13 | Nut – Push | 1 |
| 6 | 3296–5 | Nut – Lock | 2 |
| 7 | 27–6230 | Bolt – Wheel | 2 |
| 8 | 92–7663 | Cover – Wheel | 1 |
| 9 | 14–9949 | Wheel & Tire Assembly | 2 |
| 10 | 40–1940 | Washer | 2 |

| Ref. No. | Part No. | Description | No. Used |
|---|---|---|---|
| 11 | 71–7740 | Spring – Counterbalance | 1 |
| 12 | 71–8450 | Cover – Spring | 1 |
| 13 | 32151–93 | Ring – Grip | 1 |
| 14 | 71–7970 | Rod – Link | 1 |
| 15 | 71–7980 | Indicator – H.O.C. | 1 |
| 16 | 32144–4 | Screw – Tapping | 4 |
| 17 | 71–7770 | Plate – Securing Rear | 2 |
| 18 | 71–7800 | Arm – Pivot | 1 |
| 19 | 71–7840 | Rod – Trigger | 1 |

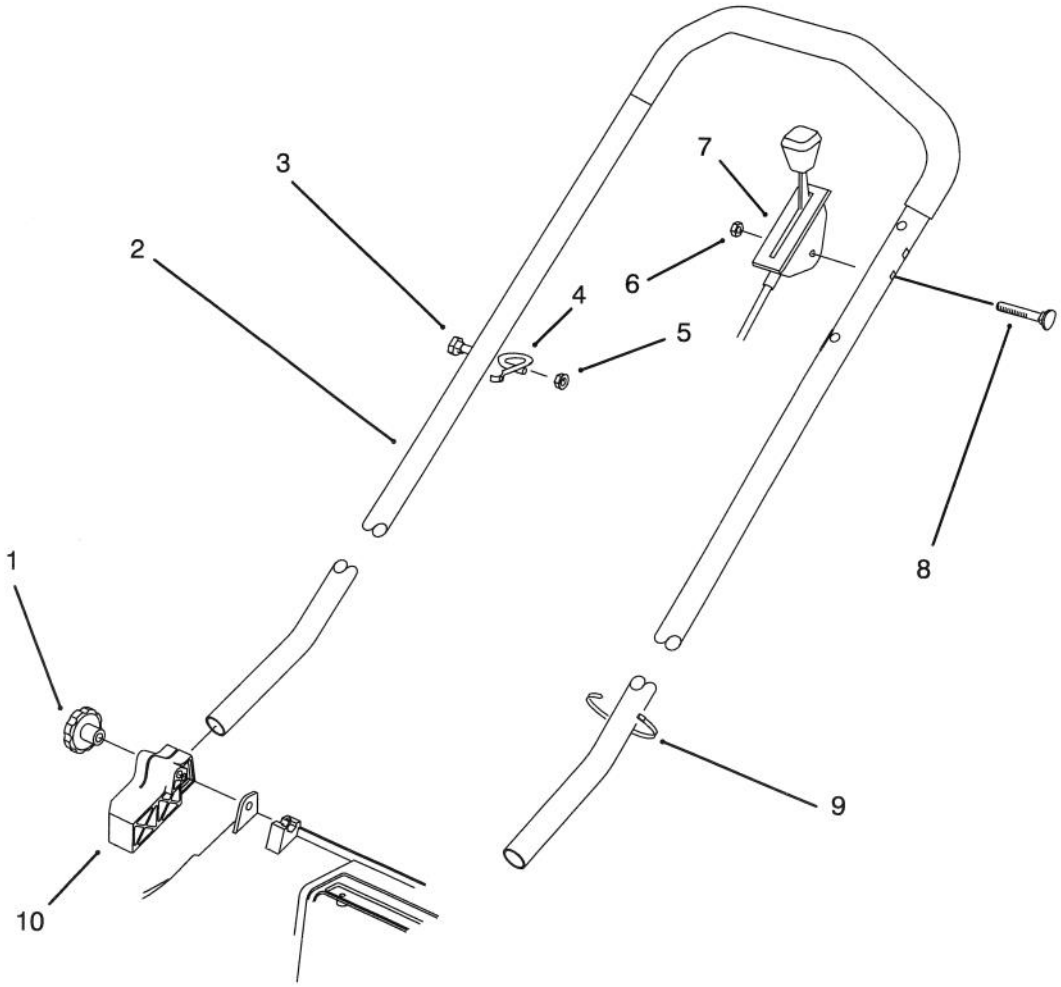


C–2007

# HANDLE ASSEMBLY

| Ref. No. | Part No. | Description | No. Used |
|---|---|---|---|
| 1 | 19–4050 | Knob | 2 |
| 2 | 71–9021 | Handle | 1 |
| 3 | 321–13 | Screw – Hex Hd. Cap | 1 |
| 4 | 46–8081 | Guide – Rope | 1 |
| 5 | 3296–42 | Nut – Lock | 1 |
| 6 | 3296–56 | Nut – Lock | 1 |

| Ref. No. | Part No. | Description | No. Used |
|---|---|---|---|
| 7 | 71–8382 | Control – Throttle | 1 |
| 8 | 46–6430 | Screw – Handle | 1 |
| 9 | 3290–378 | Tie – Cable | 1 |
| 10 | 71–8100 | Mount – Handle R.H. | 1 |
| * | 71–8090 | Mount – Handle L.H. | 1 |

*Not Illustrated

3316–859

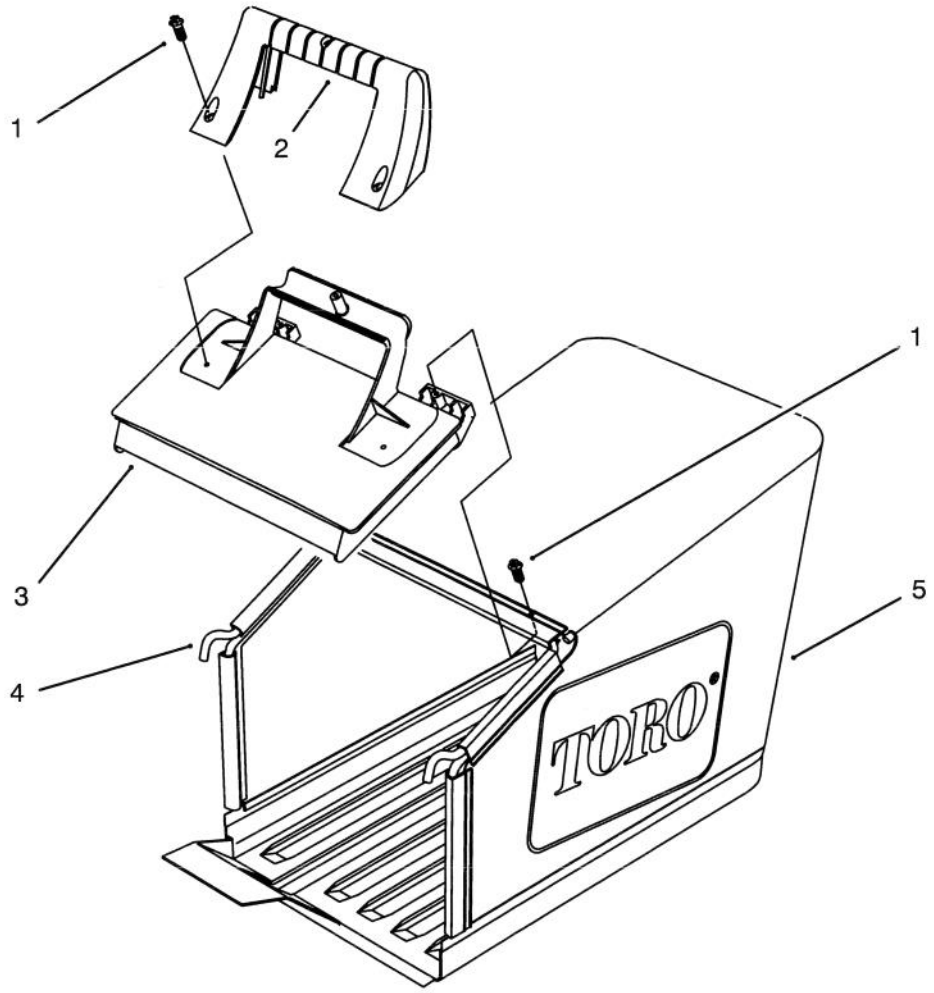


C–1509

# GRASS BAG ASSEMBLY

| Ref. No. | Part No. | Description | No. Used |
|---|---|---|---|
| 1 | 32144–111 | Screw – Thr'd Form | 5 |
| 2 | 71–9480 | Handle – Door | 1 |
| 3 | 71–9470 | Door – Bag | 1 |
| 4 | 71–9900 | Frame – Bag | 1 |
| 5 | 71–9460 | Bag – Grass | 1 |

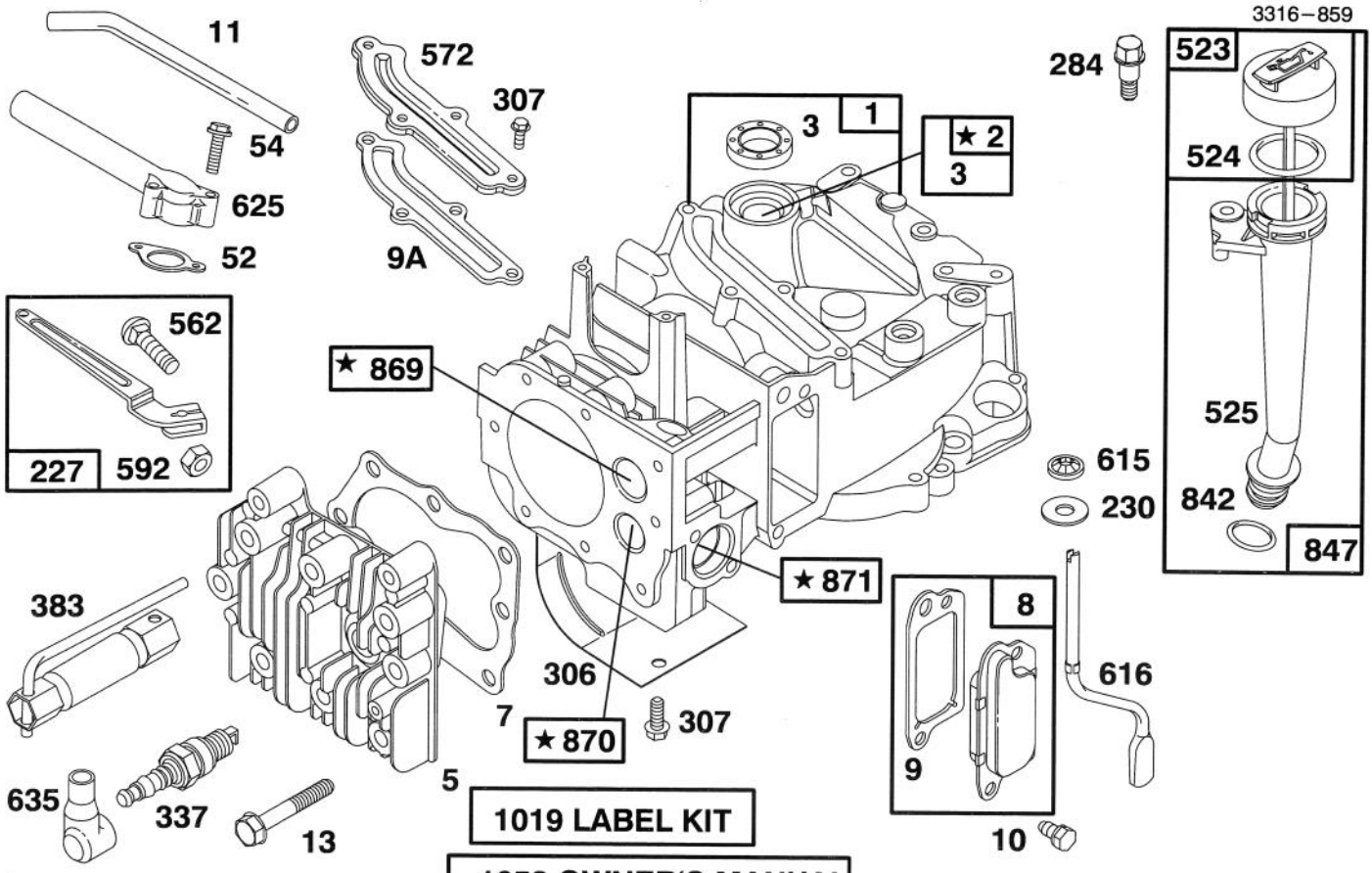


★ REQUIRES SPECIAL TOOLS TO INSTALL. SEE REPAIR INSTRUCTION MANUAL.

Assemblies include all parts shown in frames.

# ENGINE BRIGGS & STRATTON MODEL 127802-0513-21

| Ref. No. | Part No. | Description | No. Used |
|---|---|---|---|
| 1 | 493260 | Cylinder Assembly | 1 |
| 2 | 293708 | Bushing – Cylinder | 1 |
| ★3 | 299819 | Seal – Oil | 1 |
| 5 | 213861 | Head – Cylinder | 1 |
| ★7 | 272200 | Gasket – Cylinder Head | 1 |
| 8 | 495786 | Breather – Valve Chamber | 1 |
| ★9 | 272481 | Gasket – Valve Cover | 1 |
| ★9A | 272238 | Gasket – Baffle Plate | 1 |
| 10 | 94650 | Screw – Breather Mtg. | 1 |
| 11 | 231933 | Tube – Breather | 1 |
| 13 | 94547 | Screw – Cylinder Head | 1 |
| ★52 | 272199 | Gasket – Intake Elbow | 1 |
| 54 | 94526 | Screw – Intake Elbow Mtg. | 1 |
| 227 | 492349 | Lever Assembly – Gov. | 1 |
| 230 | 67072 | Washer – Gov. Crank | 1 |
| 284 | 94511 | Screw – Hex. Head | 1 |
| 306 | 224324 | Shield – Cylinder | 1 |
| 307 | 94515 | Screw – Hex. Head | 1 |
| 337 | 802592 | Plug – Spark | 1 |
| 383 | 89838 | Wrench – Spark Plug | 1 |

| Ref. No. | Part No. | Description | No. Used |
|---|---|---|---|
| 523 | 495264 | Cap With Dipstick – Oil Filler | 1 |
| ★524 | 280393 | Seal – Filler Tube | 1 |
| 525 | 495265 | Tube – Oil Filler | 1 |
| 562 | 92613 | Bolt – Governor Lever | 1 |
| 572 | 224328 | Baffle – Cylinder | 1 |
| 592 | 231082 | Nut – Hex. | 1 |
| 615 | 94474 | Fastener | 1 |
| 616 | 262578 | Crank – Governor | 1 |
| 625 | 281085 | Tube – Fuel Intake | 1 |
| 635 | 66538 | Elbow – Spark Plug | 1 |
| ★842 | 280966 | Seal – O-Ring | 1 |
| 847 | 495263 | Oil Fill Tube and Dipstick Assy. | 1 |
| 869 | 213512 | Seat – Intake Valve | 1 |
| 870 | 213513 | Seat – Exhaust Valve | 1 |
| 871 | 262001 | Guide – Exhaust Valve<br>**Note:** 63709 Guide – Intake Valve | 1 |
| 1019 | 494256 | Label Kit | 1 |
| 1058 | 272262 | Owner's Manual | 1 |

★ Included in Gasket Set–Part No. 496117.

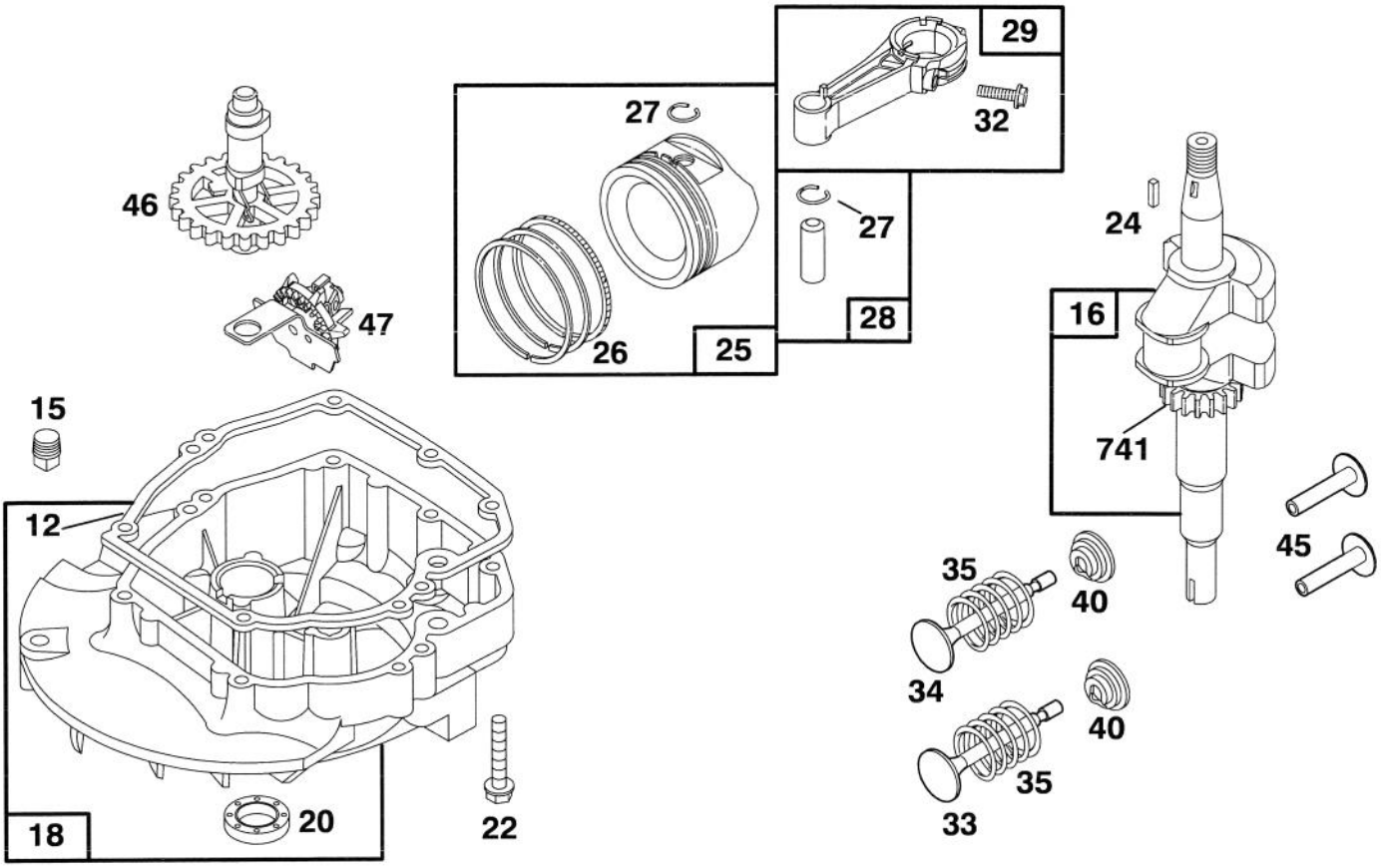


Assemblies include all parts shown in frames.

# ENGINE BRIGGS & STRATTON MODEL 127802-0513-21

| Ref. No. | Part No. | Description | No. Used |
|---|---|---|---|
| ★12 | 272198 | Gasket – Crankcase | 1 |
| 15 | 94720 | Plug – Oil Drain | 1 |
| 16 | 494546 | Crankshaft | |
| | | **Note:** Order 94388 For Timing Gear Key. | 1 |
| 18 | 493279 | Sump – Engine | 1 |
| ★20 | 399781 | Seal – Oil | 1 |
| 22 | 94220 | Screw – Hex. Head | 1 |
| | | **Note:** 94612 Screw – Hex. Head (One (1) Used in Hole Nearest Breather.) | 1 |
| 24 | 222698 | Key – Flywheel | 1 |
| 25 | 493262 | Piston Assy. (Standard) | 1 |
| | 493385 | Piston Assy. (.010" O.S.) | 1 |
| | 493386 | Piston Assy. (.020" O.S.) | 1 |
| | 493387 | Piston Assy. (.030" O.S.) | 1 |
| 26 | 493261 | Ring Set (Standard) | 1 |
| | 493388 | Ring Set (.010" O.S.) | 1 |
| | 493389 | Ring Set (.020" O.S.) | 1 |
| | 493390 | Ring Set (.030" O.S.) | 1 |

| Ref. No. | Part No. | Description | No. Used |
|---|---|---|---|
| 27 | 26026 | Lock – Piston Pin | 1 |
| 28 | 298909 | Pin – Piston (Standard) | 1 |
| | 298908 | Pin – Piston (.005" O.S.) | 1 |
| 29 | 490566 | Rod Assembly – Conn. | 1 |
| | | **Note:** For Conn. Rod With .020" Undersize Crankpin Bearing – Order No. 490743. | 1 |
| 32 | 94699 | Screw – Connecting Rod | 1 |
| 33 | 262651 | Valve – Exhaust | 1 |
| 34 | 262652 | Valve – Intake | 1 |
| 35 | 262224 | Spring – Valve | 1 |
| 40 | 93312 | Retainer – Valve Spring | 1 |
| 45 | 262204 | Tappet – Valve | 1 |
| 46 | 492828 | Gear – Cam | 1 |
| 47 | 493737 | Slinger – Oil | 1 |
| 741 | 262598 | Gear – Timing | 1 |

★ Included in Gasket Set–Part No. 496117.

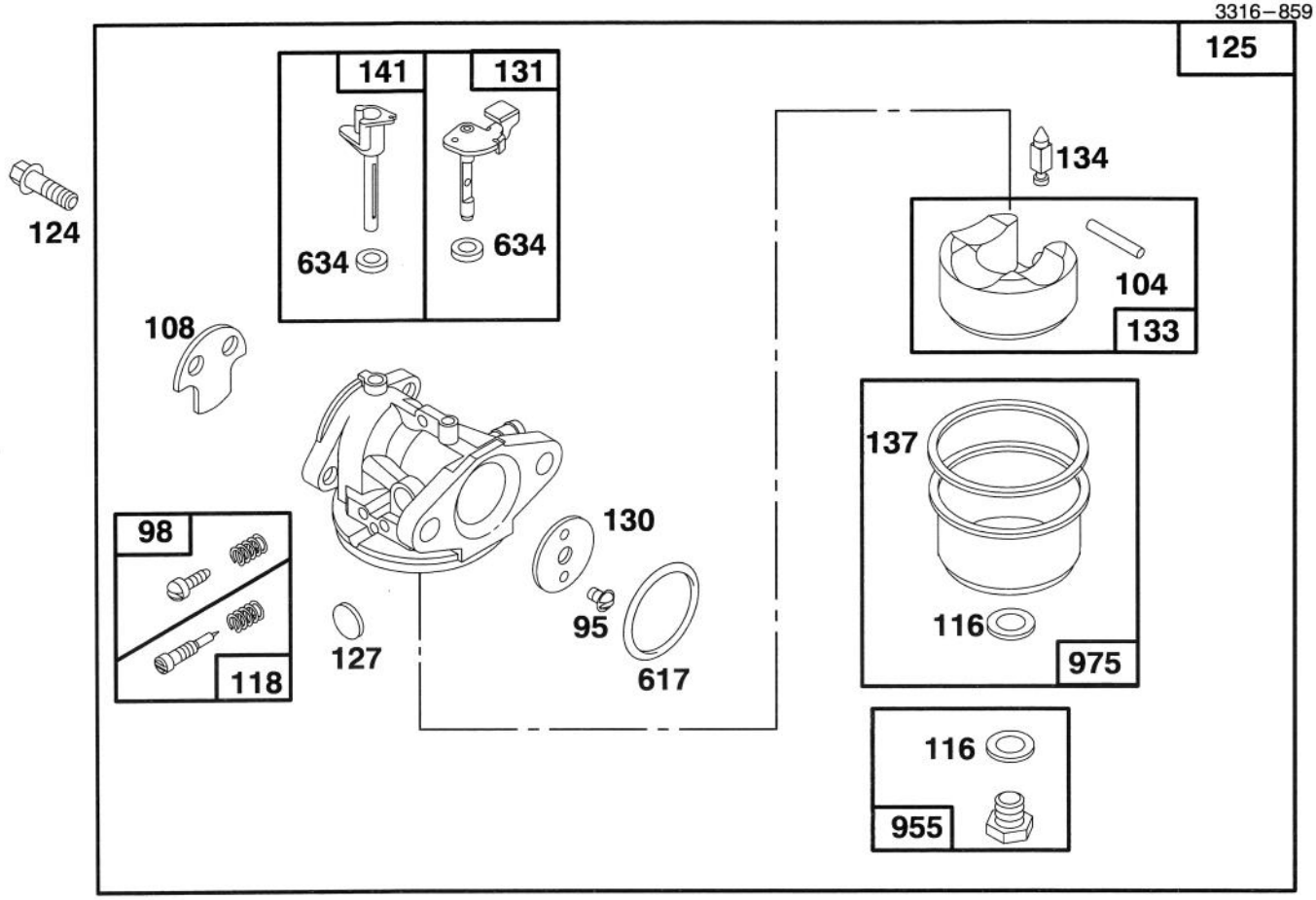


Assemblies include all parts shown in frames.

# ENGINE BRIGGS & STRATTON MODEL 127802-0513-21

| Ref. No. | Part No. | Description | No. Used |
|---|---|---|---|
| 95 | 94098 | Screw – Throttle Valve Mounting | 1 |
| 98 | 398185 | Screw – Idle Adjustment | 1 |
| ●104 | 231371 | Pin – Float Hinge | 1 |
| 108 | 223471 | Valve – Choke | 1 |
| ●◆116 | | Gasket–Sealing (Sold in Kit Only) | 1 |
| ●118 | 493765 | Valve – Needle | 1 |
| 124 | 94525 | Screw – Carburetor Mtg. | 1 |
| 125 | 494217 | Carburetor | 1 |
| ●127 | | Plug – Welch (Sold in Kit Only) | 1 |
| 130 | 223470 | Valve – Throttle | 1 |
| 131 | 493267 | Shaft – Throttle | 1 |
| 133 | 398187 | Float Assy. – Carburetor | 1 |
| ●134 | 398188 | Valve – Inlet (Includes Seat) | 1 |
| ●◆137 | | Gasket – Bowl (Sold in Kit Only. | 1 |
| 141 | 494218 | Shaft – Choke | 1 |
| ●◆617 | 270344 | Seal – Fuel Intake Tube | 1 |
| ●◆634 | | Washer–Shaft (Sold in Kit Only) | 1 |
| 955 | 493869 | Screw – Bowl Mtg. (Std.) **Note:** 493763 Screw – Bowl Mtg. (High Altitude) | 1 |
| 975 | 493640 | Bowl Assy. – Carburetor | 1 |

● Included in Carburetor Kit–Part No. 493762.
◆ Included in Carburetor Gasket Set–Part No. 490937.

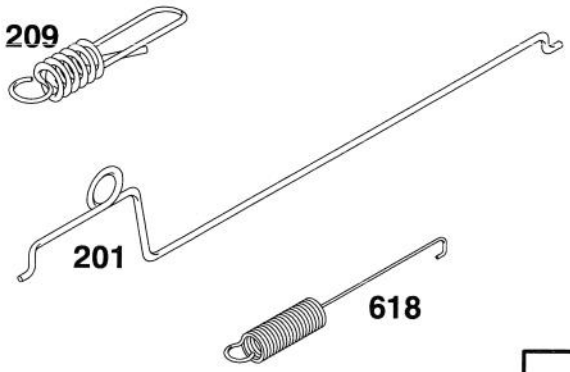


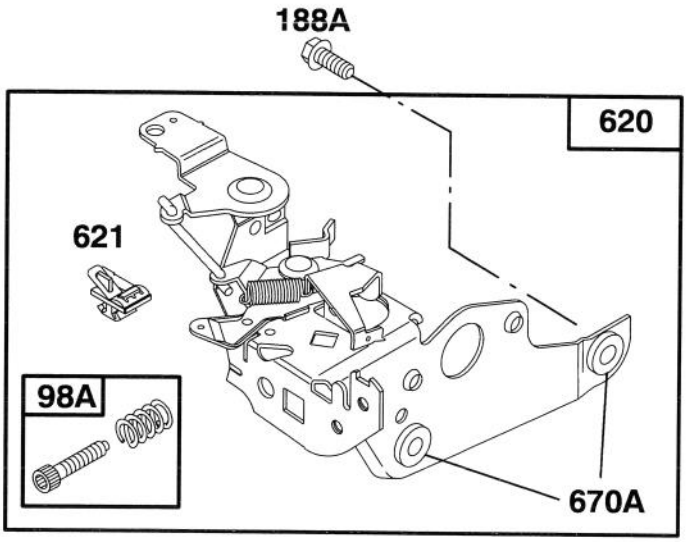


Assemblies include all parts shown in frames.

# ENGINE BRIGGS & STRATTON MODEL 127802-0513-21

| Ref. No. | Part No. | Description | No. Used |
|---|---|---|---|
| 98A | 493280 | Screw – Speed Adjust | 1 |
| 188A | 94644 | Screw – Hex. Head | 1 |
| 201 | 262579 | Link – Governor | 1 |
| 209 | 262661 | Spring – Governor | 1 |

| Ref. No. | Part No. | Description | No. Used |
|---|---|---|---|
| 618 | 262749 | Spring – Return | 1 |
| 620 | 495975 | Bracket – Carburetor | 1 |
| 621 | 396847 | Switch – Stop | 1 |
| 670A | 493823 | Spacer – Bracket | 1 |

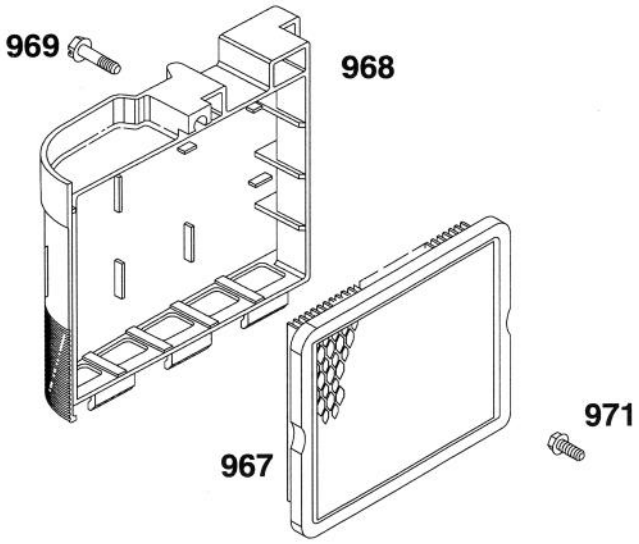


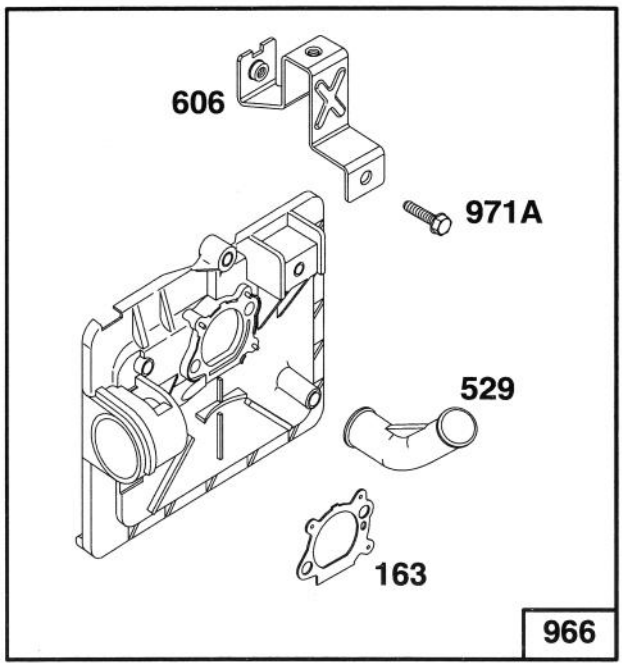


Assemblies include all parts shown in frames.

# ENGINE BRIGGS & STRATTON MODEL 127802-0513-21

| Ref. No. | Part No. | Description | No. Used |
|---|---|---|---|
| 163 | 272653 | Gasket – Air Cleaner | 1 |
| 529 | 281299 | Grommet – Breather | 1 |
| 606 | 224815 | Strap – Bracket | 1 |
| 966 | 496116 | Base – Air Cleaner | 1 |
| 967 | 491588 | Filter – Air | 1 |

| Ref. No. | Part No. | Description | No. Used |
|---|---|---|---|
| 968 | 281340 | Cover – Air Cleaner | 1 |
| 969 | 94120 | Screw – Cover Mtg. | 1 |
| 971 | 94121 | Screw – Air Cleaner | 1 |
| 971A | 94749 | Screw – Hex. Head | 1 |

★ Included in Gasket Set–Part No. 496117.

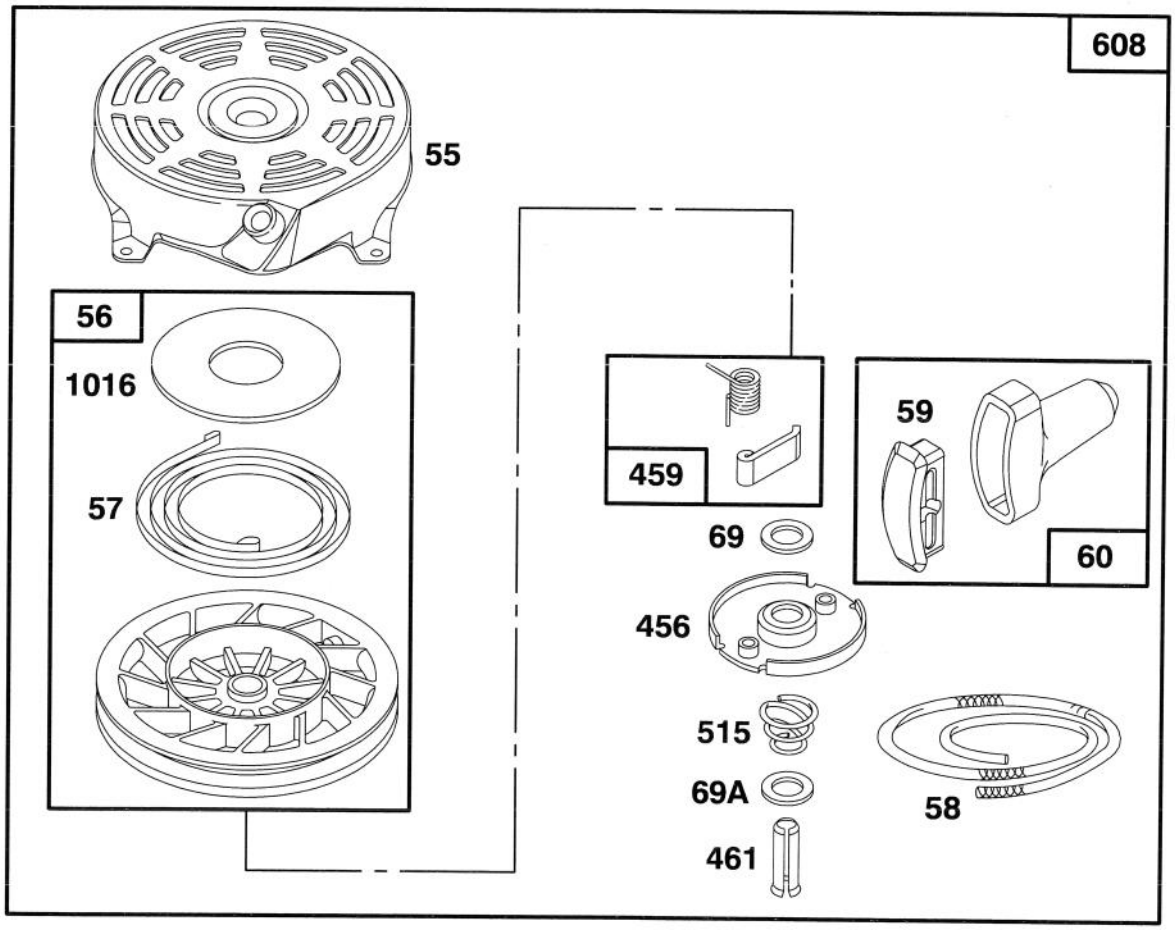


Assemblies include all parts shown in frames.

# ENGINE BRIGGS & STRATTON MODEL 127802-0513-21

| Ref. No. | Part No. | Description | No. Used |
|---|---|---|---|
| 55 | 492831 | Housing – Rewind Starter | 1 |
| 56 | 493824 | Pulley – Rewind Starter | 1 |
| 57 | 262594 | Spring – Rewind Starter | 1 |
| 58 | 280399 | Rope – Rewind Starter | 1 |
| 59 | 396892 | Insert – Handle | 1 |
| 60 | 393152 | Handle – Rewind Starter | 1 |
| 69 | 280973 | Washer – Rewind Starter | 1 |
| 69A | 224322 | Washer – Rewind Starter | 1 |
| 456 | 224321 | Retainer – Rewind Starter | 1 |

| Ref. No. | Part No. | Description | No. Used |
|---|---|---|---|
| 459 | 492833 | Pawl – Starter | 1 |
| 461 | 262626 | Pin – Starter | 1 |
| 515 | 262625 | Spring – Torsion | 1 |
| 608 | 493295 | Starter Assy. – Rewind | 1 |
| | | **Includes:** | |
| | | 94128 Screw – Hex. Hd. | |
| | | 92987 Nut – Hex. | 1 |
| 1016 | 224278 | Cover – Rewind Starter | 1 |

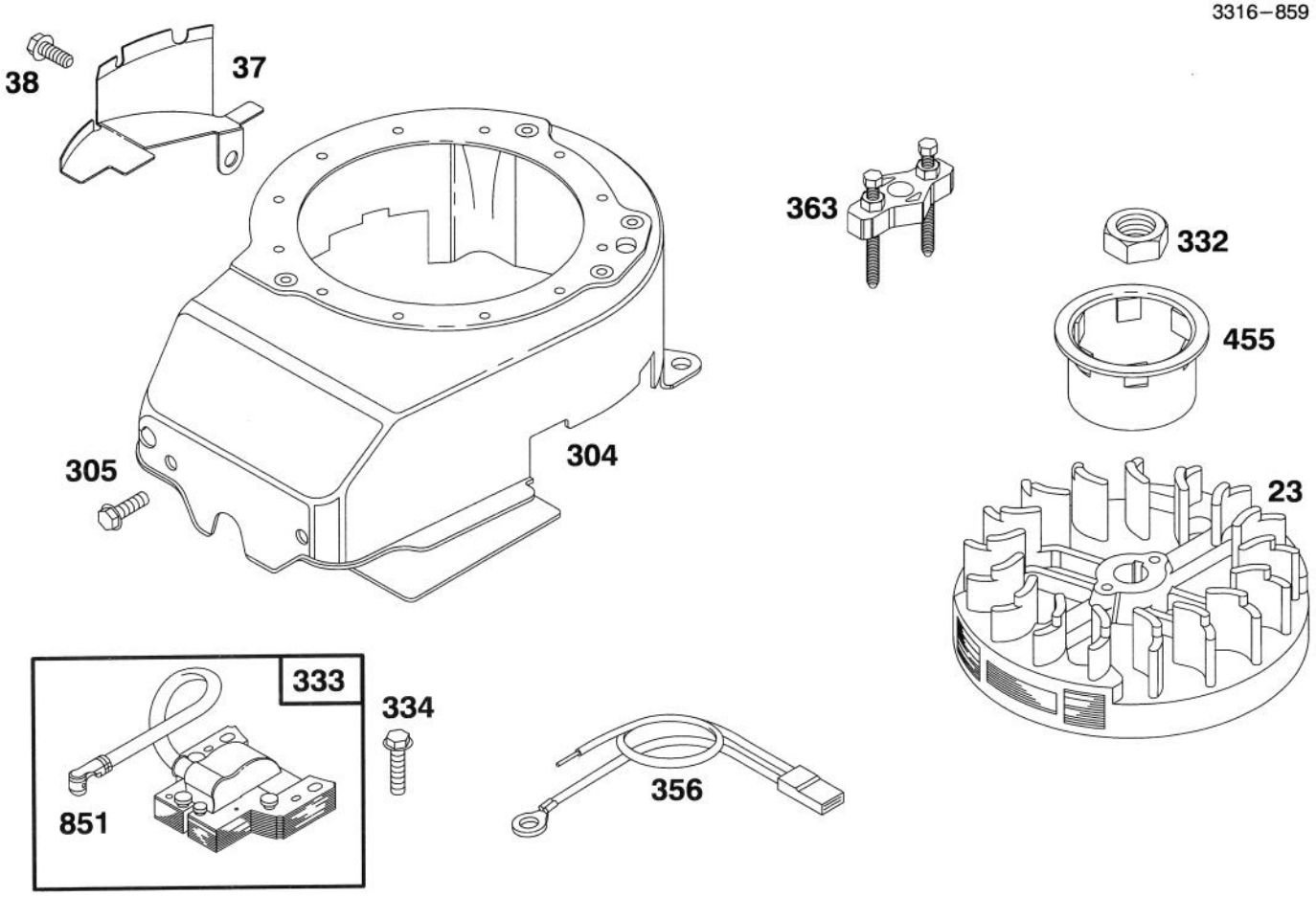


Assemblies include all parts shown in frames.

# ENGINE BRIGGS & STRATTON MODEL 127802-0513-21

| Ref. No. | Part No. | Description | No. Used |
|---|---|---|---|
| 23 | 492177 | Flywheel | 1 |
| 37 | 224511 | Guard – Flywheel | 1 |
| 38 | 94786 | Screw – Hex. Head | 1 |
| 304 | 493294 | Housing – Blower | 1 |
| 305 | 94786 | Screw – Sem | 1 |
| 332 | 92284 | Nut – Flywheel | 1 |

| Ref. No. | Part No. | Description | No. Used |
|---|---|---|---|
| 333 | 802574 | Armature – Magneto | 1 |
| 334 | 94731 | Screw – Sem | 1 |
| 356 | 398808 | Wire – Ground | 1 |
| 363 | 19069 | Puller – Flywheel | 1 |
| 455 | 224250 | Cup – Starter | 1 |
| 851 | 493880 | Terminal – Ignition Cable | 1 |

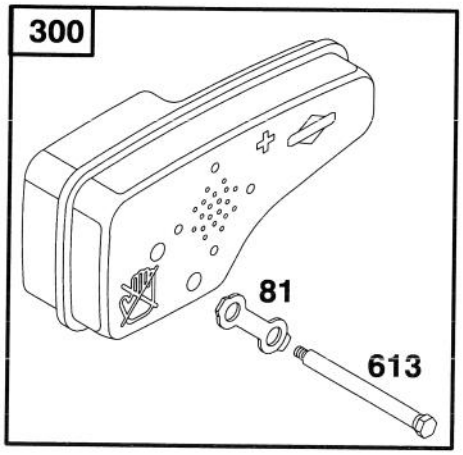


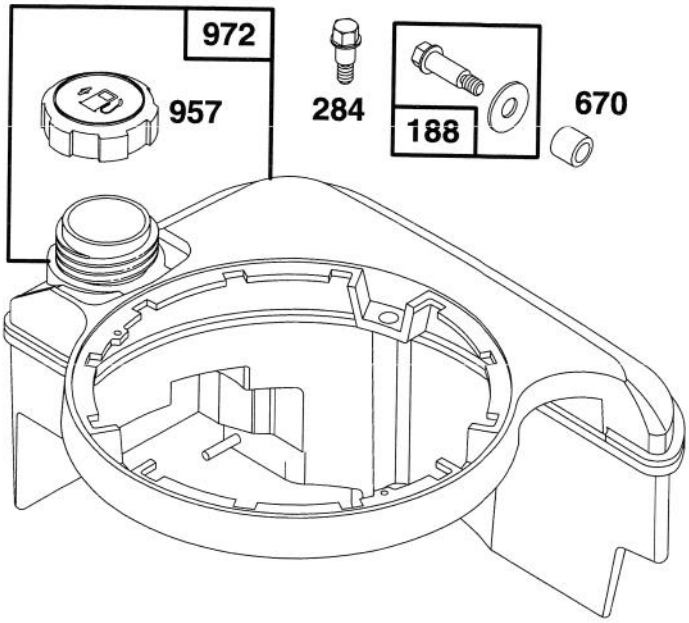


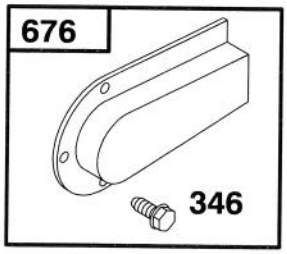


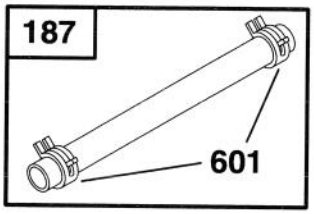


Assemblies include all parts shown in frames.

# ENGINE BRIGGS & STRATTON MODEL 127802-0513-21

| Ref. No. | Part No. | Description | No. Used |
|---|---|---|---|
| 81 | 223664 | Lock – Muffler Screw | 1 |
| 187 | 492790 | Hose – Fuel | 1 |
| 188 | 398540 | Screw – Tank Mounting | 1 |
| 284 | 94511 | Screw – Hex. Head | 1 |
| 300 | 496106 | Muffler – Exhaust | 1 |
| 346 | 93705 | Screw – Hex. Head | 1 |

| Ref. No. | Part No. | Description | No. Used |
|---|---|---|---|
| 601 | 93807 | Clamp – Hose | 1 |
| 613 | 94231 | Screw – Muffler Mtg. | 1 |
| 670 | 280512 | Spacer – Fuel Tank | 1 |
| 676 | 493871 | Deflector – Muffler | 1 |
| 957 | 397974 | Cap Assy. – Fuel | 1 |
| 972 | 495224 | Tank Assembly – Fuel | 1 |

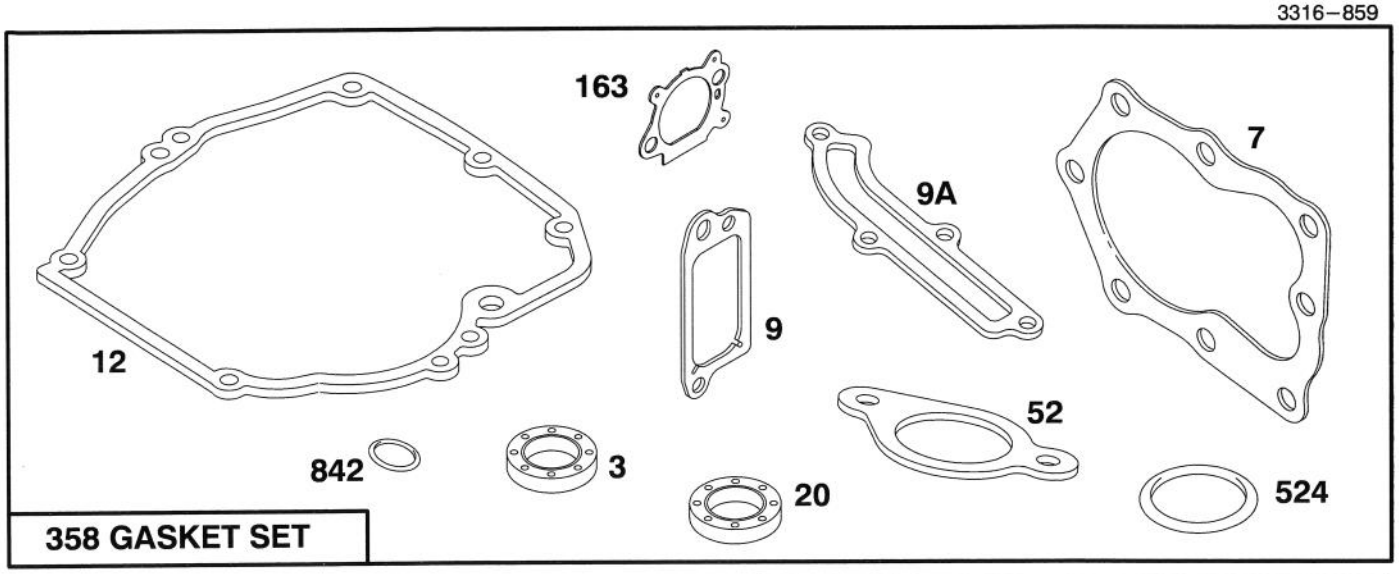


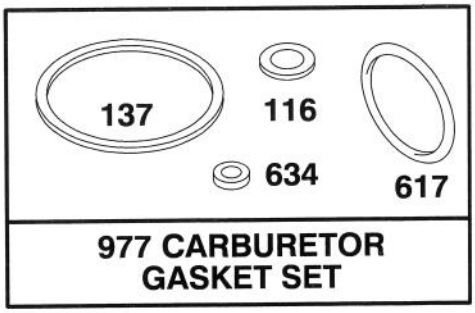


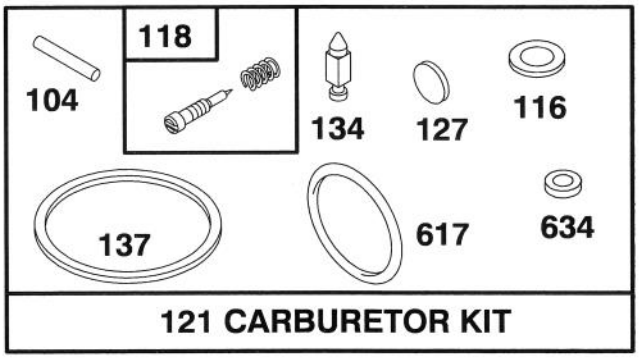


Assemblies include all parts shown in frames.

# ENGINE BRIGGS & STRATTON MODEL 127802-0513-21

| Ref. No. | Part No. | Description | No. Used |
|---|---|---|---|
| ★3 | 299819 | Seal – Oil | 1 |
| ★7 | 272200 | Gasket – Cylinder Hd. | 1 |
| ★9 | 272481 | Gasket – Valve Cover | 1 |
| ★9A | 272238 | Gasket – Baffle Plate | 1 |
| ★12 | 272198 | Gasket – Crankcase | 1 |
| ★20 | 399781 | Seal – Oil | 1 |
| ★52 | 272199 | Gasket – Intake Elbow | 1 |
| ●104 | 231371 | Pin – Float Hinge | 1 |
| ●◆116 | | Gasket – Sealing (Sold in Kit Only) | 1 |
| ●118 | 493765 | Valve – Needle | 1 |
| 121 | 493762 | Carburetor Kit | 1 |
| ●127 | | Plug – Welch (Sold in Kit Only) | 1 |
| ●134 | 398188 | Valve – Inlet (Includes Seat) | 1 |
| ●◆137 | | Gasket – Bowl (Sold in Kit Only) | 1 |
| ★163 | 272653 | Gasket – Air Cleaner | 1 |
| 358 | 496117 | Gasket Set | 1 |
| ★524 | 280393 | Seal – Filler Tube | 1 |
| ●◆617 | 270344 | Seal – Fuel Intake Tube | 1 |
| ●◆634 | | Washer – Shaft (Sold in Kit Only) | 1 |
| ★842 | 280966 | Seal – O-Ring | 1 |
| 977 | 490937 | Gasket Set – Carburetor | 1 |

● Included in Carburetor Kit–Part No. 493762.
◆ Included in Carburetor Gasket Set–Part No. 490937.
★ Included in Gasket Set–Part No. 496117.

# TORO PART NUMBER INDEX

| Part No. | Description | Pg. No. | Ref. No. | Qty. |
|---|---|---|---|---|
| 14–9949 | Wheel & Tire Assembly | 4 | 9 | 2 |
| 19–4050 | Knob | 5 | 1 | 2 |
| 26–0672 | Bolt – Blade | 3 | 5 | 1 |
| 27–6230 | Bolt – Wheel | 4 | 7 | 2 |
| 27–6230 | Bolt – Wheel | 1 | 33 | 2 |
| 27–6250 | Bushing | 1 | 31 | 2 |
| 40–1940 | Washer | 4 | 10 | 2 |
| 40–1940 | Washer | 1 | 30 | 2 |
| 46–1113 | Wheel & Tire Assembly 7 | 1 | 32 | 2 |
| 46–6430 | Screw – Handle | 5 | 8 | 1 |
| 46–8081 | Guide – Rope | 5 | 4 | 1 |
| 63–8590 | Screw | 4 | 4 | 2 |
| 65–5210 | Screw – Thread Forming | 1 | 12 | 2 |
| 66–0680 | Decal – French Regulation | 1 | 20 | 1 |
| 71–7740 | Spring – Counterbalance | 4 | 11 | 1 |
| 71–7770 | Plate – Securing Rear | 4 | 17 | 2 |
| 71–7800 | Arm – Pivot | 4 | 18 | 1 |
| 71–7820 | Pivot – Front | 1 | 28 | 1 |
| 71–7840 | Rod – Trigger | 4 | 19 | 1 |
| 71–7860 | Grip – Upper | 1 | 13 | 1 |
| 71–7870 | Grip – Lower | 1 | 8 | 1 |
| 71–7900 | Cap – Bolt Hinge L.H. | 1 | 15 | 1 |
| 71–7910 | Cap – Bolt Hinge R.H. | 1 | 11 | 1 |
| 71–7920 | Cover – Belt | 1 | 6 | 1 |
| 71–7930 | Trigger – H.O.C. | 1 | 10 | 1 |
| 71–7940 | Retainer – Blade | 3 | 1 | 1 |
| 71–7970 | Rod – Link | 4 | 14 | 1 |
| 71–7980 | Indicator – H.O.C. | 4 | 15 | 1 |
| 71–7990 | Ramp – Discharge | 1 | 26 | 1 |
| 71–8060 | Spring – Trigger Ret. | 4 | 2 | 2 |
| 71–8080 | Saddle – H.O.C. | 4 | 3 | 1 |
| 71–8090 | Mount – Handle L.H. | 5 | * | 1 |
| 71–8100 | Mount – Handle R.H. | 5 | 10 | 1 |
| 71–8382 | Control – Throttle | 5 | 7 | 1 |
| 71–8450 | Cover – Spring | 4 | 12 | 1 |
| 71–8580 | Spacer – Door | 1 | 19 | 2 |
| 71–8830 | Retainer – Shaft | 1 | 27 | 2 |
| 71–8920 | Kicker – Front Right | 1 | 2 | 1 |
| 71–9021 | Handle | 5 | 2 | 1 |
| 71–9230 | Kicker – Rear Right | 1 | 4 | 1 |
| 71–9250 | Kicker – Rear Left | 1 | 21 | 1 |
| 71–9260 | Blade – 48cm Recycler | 3 | 2 | 1 |
| 16–5989 | Housing – Deck | 1 | 22 | 1 |
| 71–9440 | Kicker – Front Left | 1 | 23 | 1 |
| 71–9460 | Bag – Grass | 6 | 5 | 1 |
| 71–9470 | Door – Bag | 6 | 3 | 1 |
| 71–9480 | Handle – Door | 6 | 2 | 1 |
| 71–9800 | Door – Discharge | 1 | 18 | 1 |
| 71–9840 | Spring – Door | 1 | 17 | 2 |
| 71–9900 | Frame – Bag | 6 | 4 | 1 |
| 80–0510 | Stiffener – Blade | 3 | 3 | 1 |
| 86–7990 | Screw – Clamp | 2 | 10 | 1 |
| 92–7663 | Cover – Wheel | 4 | 8 | 1 |
| 92–7852 | Shield – Muffler | 2 | 7 | 1 |
| 92–7863 | Decal – Deck | 1 | 1 | 1 |
| 92–7864 | Decal – Engine | 2 | 1 | 1 |
| 92–7886 | Shroud – Engine | 2 | 4 | 1 |
| 92–7887 | Screw – Mounting | 2 | 2 | 2 |
| 92–9077 | Decal – DIN | 1 | 5 | 1 |
| 2210–249 | Clamp – Casing | 2 | 11 | 1 |
| 2210–316 | Stop – Rope | 2 | 3 | 1 |
| 321–13 | Screw – Hex Hd. Cap | 5 | 3 | 1 |
| 322–29 | Screw – Hex Hd. Cap | 1 | 16 | 2 |
| 3253–22 | Washer – Lock | 3 | 4 | 1 |
| 3284–5 | Pin – Groove | 1 | 9 | 1 |
| 3290–378 | Tie – Cable | 2 | 5 | 1 |
| 3290–378 | Tie – Cable | 5 | 9 | 1 |
| 3296–5 | Nut – Lock | 4 | 6 | 2 |
| 3296–5 | Nut – Lock | 1 | 29 | 2 |
| 3296–42 | Nut – Lock | 5 | 5 | 1 |
| 3296–56 | Nut – Lock | 5 | 6 | 1 |
| 32112–11 | Nut – Push | 1 | 25 | 1 |
| 32112–13 | Nut – Push | 4 | 5 | 1 |
| 32144–4 | Screw – Tapping | 4 | 16 | 4 |
| 32144–4 | Screw – Tapping | 1 | 24 | 8 |
| 32144–31 | Screw – Tapping | 4 | 1 | 1 |
| 32144–70 | Screw – Tapping | 1 | 7 | 1 |
| 32144–73 | Screw – Hex Washer Hd. | 2 | 6 | 3 |
| 32144–97 | Screw – Phillips Hd. | 1 | 14 | 2 |
| 32144–102 | Screw – Engine | 2 | 8 | 3 |
| 32144–111 | Screw – Phillips Hd. | 1 | 3 | 8 |
| 32144–111 | Screw – Thr'd Form | 6 | 1 | 5 |
| 32151–93 | Ring – Grip | 4 | 13 | 1 |

*Not Illustrated