FORM NO. 3316–860

TORO®

MODEL NO. 20806B–4900001 & UP

PARTS CATALOG

48cm RECYCLER® MOWER

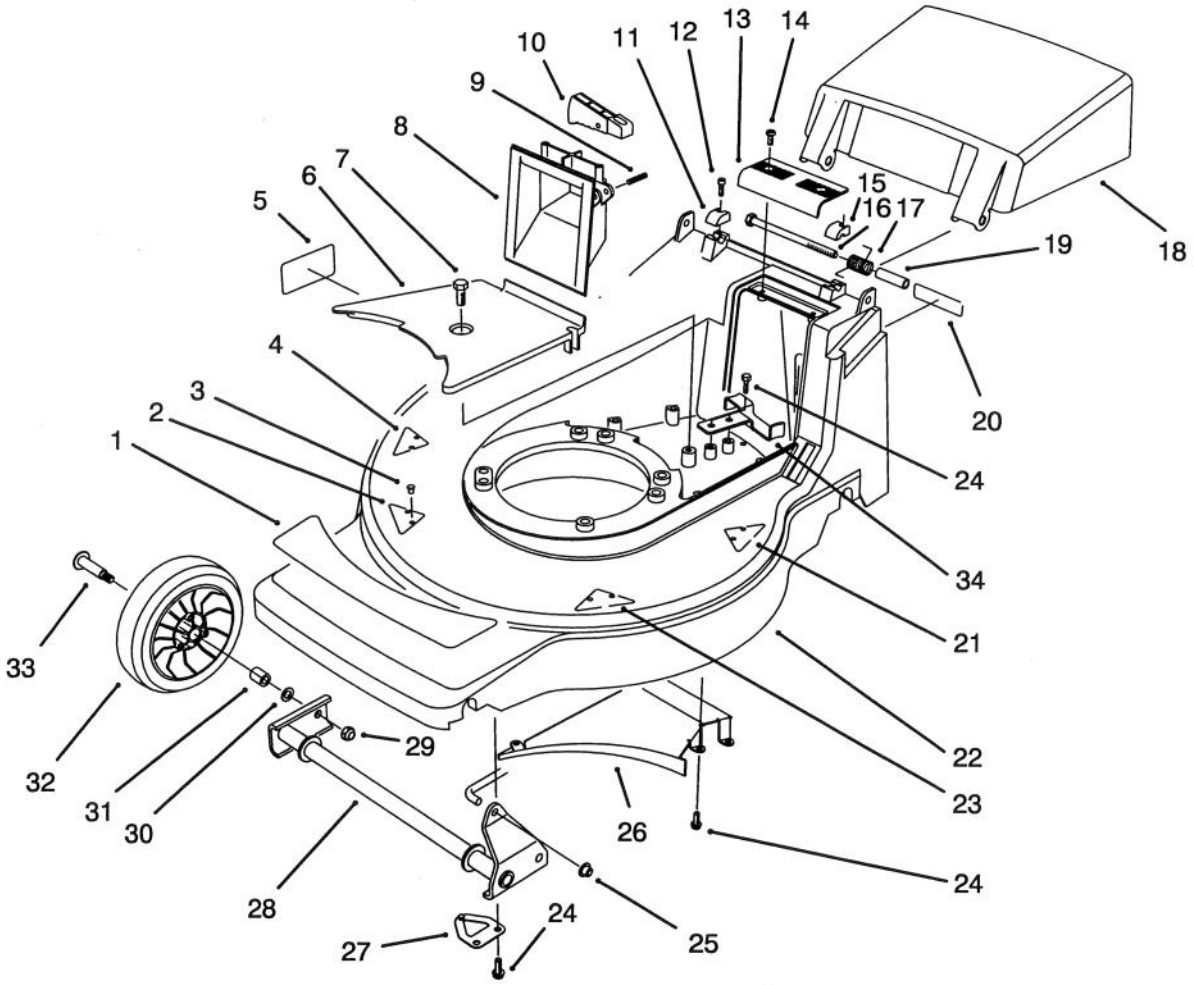

C–2011

HOUSING ASSEMBLY

Ref. No.	Part No.	Description	No. Used
1	92–7863	Decal – Deck	1
2	71–8920	Kicker – Front Right	1
3	32144–111	Screw – Phillips Hd.	8
4	71–9230	Kicker – Rear Right	1
5	92–9077	Decal – DIN	1
6	71–7920	Cover – Belt	1
7	32144–70	Screw – Tapping	1
8	71–7870	Grip – Lower	1
9	3284–5	Pin – Groove	1
10	71–7930	Trigger – H.O.C.	1
11	71–7910	Cap – Bolt Hinge R.H.	1
12	65–5210	Screw – Thread Forming	2
13	71–7860	Grip – Upper	1
14	32144–97	Screw – Phillips Hd.	2
15	71–7900	Cap – Bolt Hinge L.H.	1
16	322–29	Screw – Hex Hd. Cap	2
17	71–9840	Spring – Door	2
18	71–9800	Door – Discharge	1

Ref. No.	Part No.	Description	No. Used
19	71–8580	Spacer – Door	2
20	66–0680	Decal – French Regulation	1
21	71–9250	Kicker – Rear Left	1
22	16–5989	Housing – Deck (Incl. Ref. #2–5, 20, 21, & 23)	1
23	71–9440	Kicker – Front Left	1
24	32144–4	Screw – Tapping	8
25	32112–11	Nut – Push	1
26	71–7990	Ramp – Discharge	1
27	71–8830	Retainer – Shaft	2
28	71–7820	Pivot – Front	1
29	3296–5	Nut – Lock	2
30	40–1940	Washer	2
31		Bushing	2
32	46–1113	Wheel & Tire Assembly 7"	2
33	27–6230	Bolt – Wheel	2
34	71–7890	Guide – Belt Rear	1

Copyright 1994 The Toro Company
All Rights Reserved

TPS

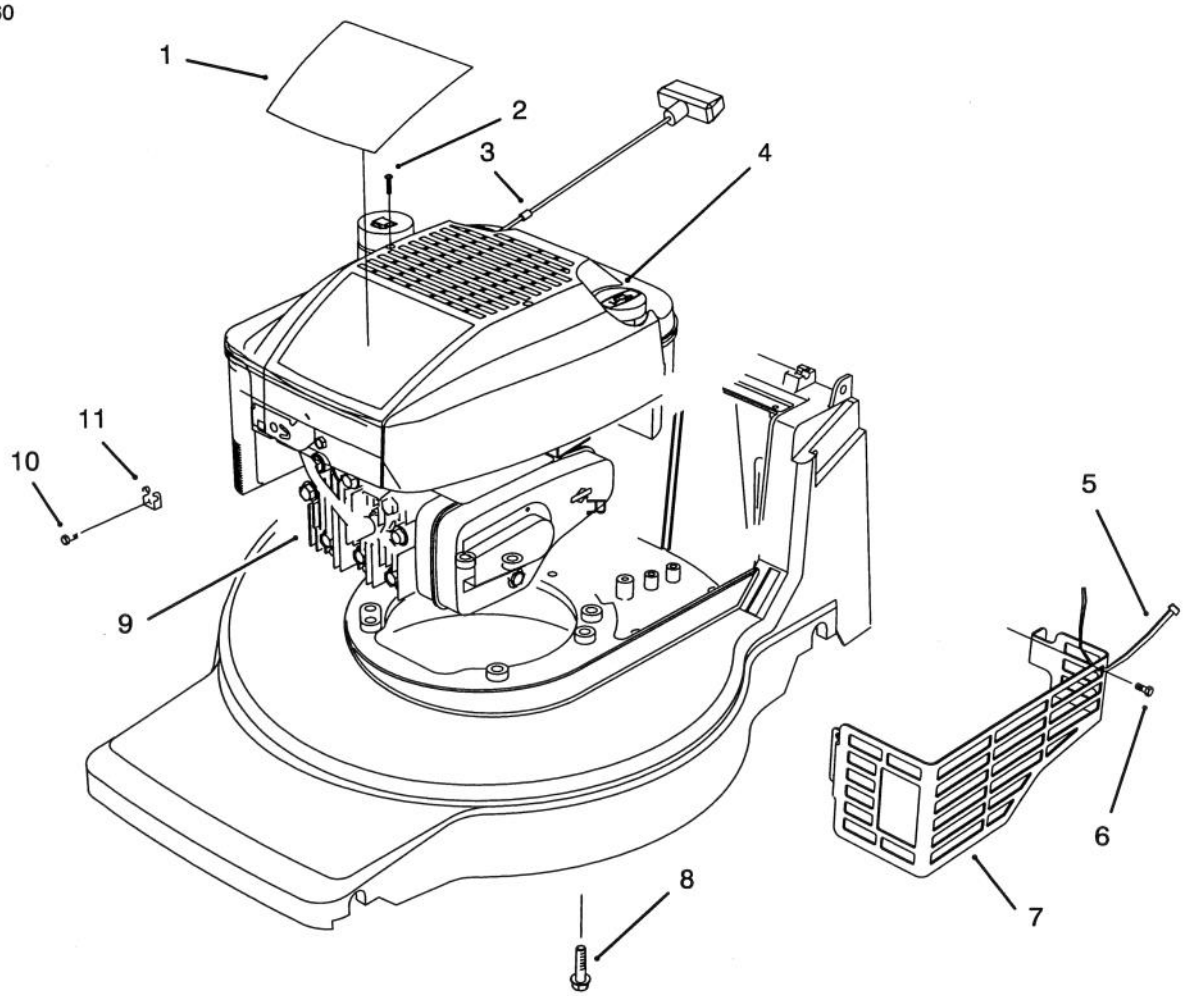

C–2004

ENGINE ASSEMBLY

Ref. No.	Part No.	Description	No. Used
1	92–7864	Decal – Engine	1
2	92–7887	Screw – Mounting	2
3	2210–316	Stop – Rope	1
4	92–7886	Shroud – Engine	1
5	3290–378	Tie – Cable	1
6	32144–73	Screw – Hex Washer Hd. Thread Forming	3

Ref. No.	Part No.	Description	No. Used
7	92–7852	Shield – Muffler	1
8	32144–102	Screw – Engine	3
9		Engine	1
10	86–7990	Screw – Clamp	1
11	2210–249	Clamp – Casing	1

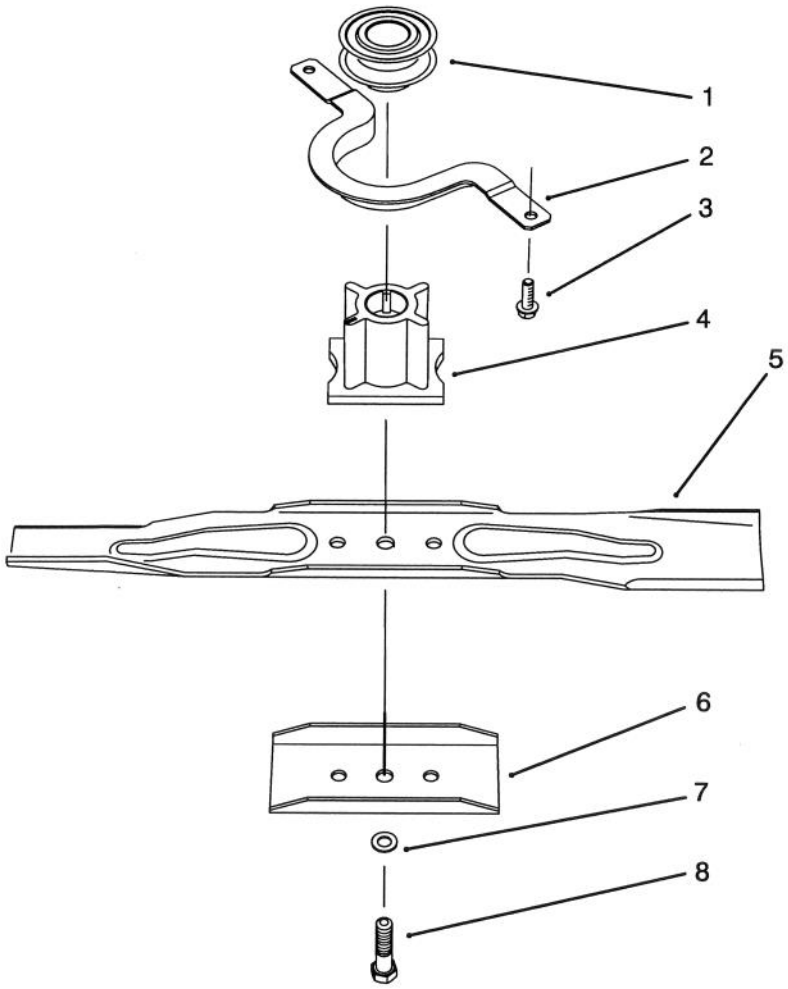

C–1012

BLADE ASSEMBLY

Ref. No.	Part No.	Description	No. Used
1	62–7550	Pulley – Driver	1
2	71–7960	Guide – Engine Belt	1
3	32144–4	Screw – Tapping	3
4	71–7940	Retainer – Blade	1

Ref. No.	Part No.	Description	No. Used
5	71–9260	Blade – 48cm Recycler	1
6	80–0510	Stiffener – Blade	1
7	3253–22	Washer – Lock	1
8	26–0672	Bolt – Blade	1

3316–860

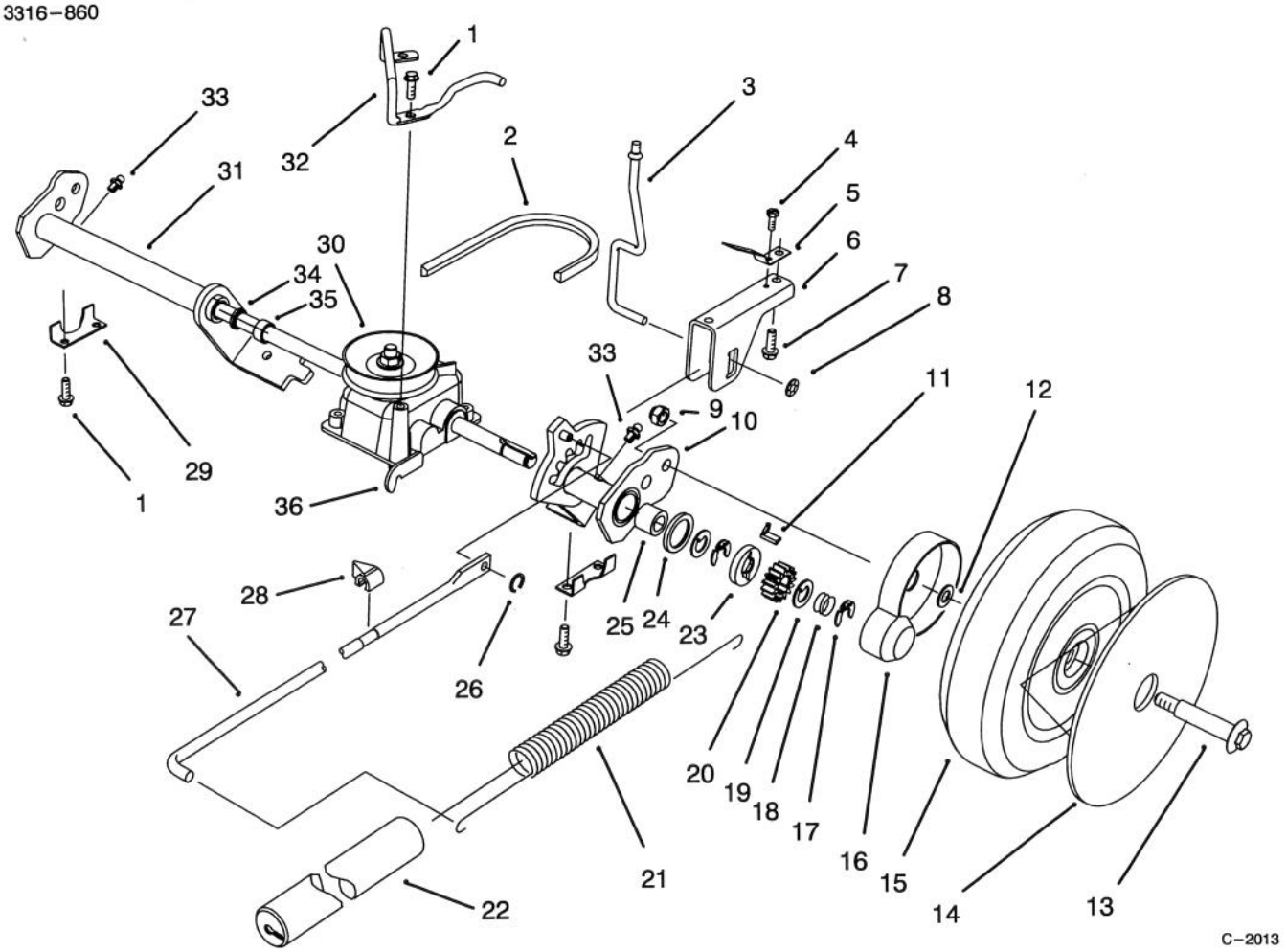

REAR AXLE ASSEMBLY

Ref. No.	Part No.	Description	No. Used
1	32144–4	Screw – Tapping	6
2	71–9450	V–Belt	1
3	71–7840	Rod – Trigger	1
4	32144–31	Screw – Tapping	1
5	71–8060	Spring – Trigger Ret.	2
6	71–8080	Saddle – H.O.C.	2
7	63–8590	Screw	2
8	32112–13	Nut – Push	1
9	3296–5	Nut – Lock	2
10	92–9677	Arm – Pivot L.H. (Incl. Ref. #25, & 33–35)	1
11	66–6050	Key – Rocking L.H.	1
*	66–6040	Key – Rocking R.H.	1
12	74–1670	Spacer – Wheel	2
13	27–6230	Bolt – Wheel	2
14	92–7663	Cover – Wheel	1
15	14–9959	Wheel & Tire Assembly	2
16	74–1660	Cover – Wheel	2
17	65–2720	Ring – Retaining	4
18	65–4720	Spring – Compression	2

Ref. No.	Part No.	Description	No. Used
19	65–4740	Washer – Thrust Keyed	4
20	65–4750	Gear – Pinion	2
21	71–7740	Spring – Counterbalance	1
22	71–8450	Cover – Spring	1
23	65–4760	Washer	2
24	65–4710	Ring – Friction	2
25	48–2060	Bearing – Roller	2
26	32151–93	Ring – Grip	1
27	71–7970	Rod – Link	1
28	71–7980	Indicator – H.O.C.	1
29	71–7770	Plate – Securing Rear	2
30	71–9600	Gear Case Assembly	1
31	92–9680	Arm – Pivot R.H. (Incl. Ref. #25, & 33–35)	1
32	71–9850	Retainer – Belt	1
33	302–26	Fitting – Grease	2
34	47–6730	Seal – Oil	2
35	47–2890	Bushing	2
36	71–9630	Bracket – Traction	1

*Not Illustrated

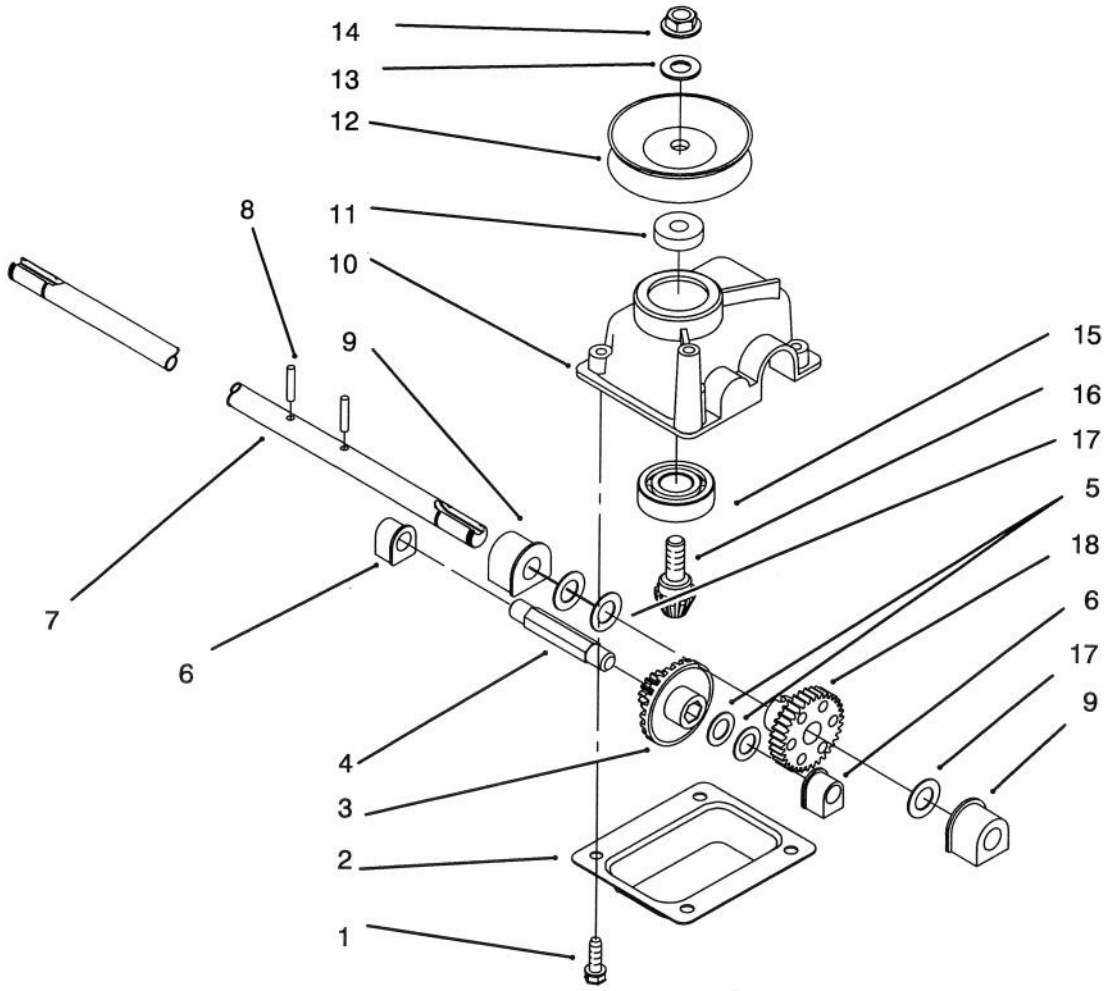

GEAR CASE ASSEMBLY

Ref. No.	Part No.	Description	No. Used
1	49–2040	Screw – Taptite	4
2	614668	Cover – Gear Case	1
3	55–3760	Pinion – 15 Tooth	1
4	614696	Shaft – Intermediate	1
5	36–4791	Washer	2
6	60–8750	Bushing	2
7	71–9620	Shaft – Output	1
8	32121–63	Pin – Groove	2
9	60–8850	Bushing – Output	2
10	614578	Gearcase	1

Ref. No.	Part No.	Description	No. Used
11	62–6660	Spacer	1
12	71–9610	Pulley – Half	2
13	3256–24	Washer	1
14	3296–5	Nut	1
15	38–7820	Bearing – Ball	1
16	60–8890	Gear – Bevel Pinion	1
17	36–4780	Washer – Thrust	3
18	614596	Gear 34 Tooth	1
*	71–9600	Gear Case Ass'y Complete	1

*Not Illustrated

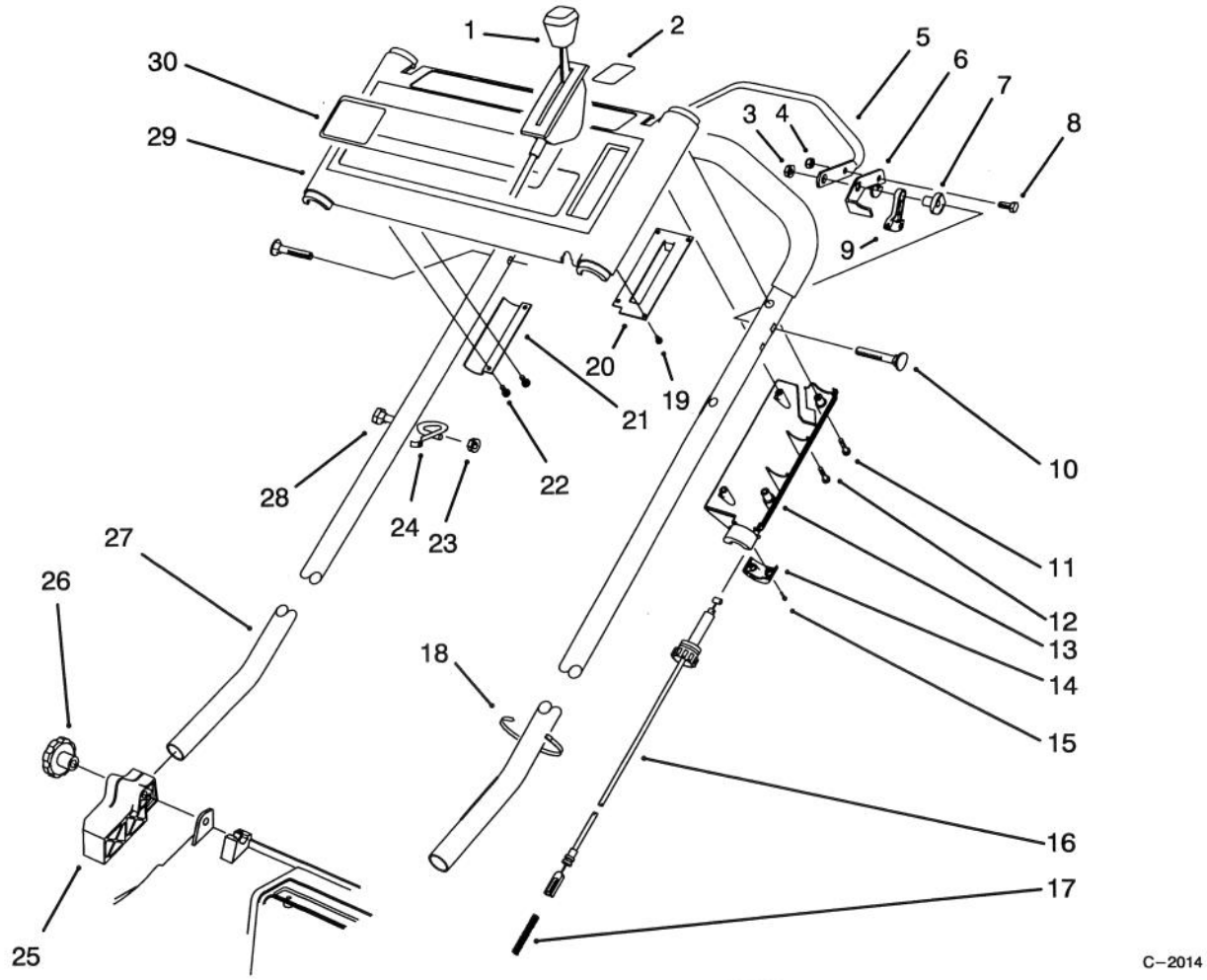

C–2014

HANDLE ASSEMBLY

Ref. No.	Part No.	Description	No. Used
1	66–0236	Control – Throttle	1
2	92–9088	Decal – Danger Panel	1
3	3296–29	Nut – Lock	2
4	3296–42	Nut – Lock	2
5	46–9900	Bar – Control	1
6	66–5350	Lever – Control	1
7	66–0330	Spacer – Support	2
8	321–3	Screw – Hex Hd. Cap	1
9	46–5520	Lever – Traction	1
10	17–9426	Screw – Handle	2
11	32144–97	Screw – Phillips Hd.	5
12	32104–121	Screw – Tapping	1
13	71–7680	Cover – Throttle Lower	1
14	71–7630	Cap – Throttle Lower	1
15	32144–99	Screw – Phillips Hd.	2
16	71–8110	Cable – Traction	1

Ref. No.	Part No.	Description	No. Used
17	71–8310	Spring – Compression	1
18	3290–378	Tie – Cable	1
19	32144–98	Screw – Phillips Hd.	4
20	71–8040	Plate – Throttle	1
21	71–8130	Bracket – Control	1
22	32144–97	Screw – Phillips Hd.	5
23	3296–42	Nut – Lock	2
24	46–8081	Guide – Rope	1
25	71–8100	Mount – Handle R.H.	1
*	71–8090	Mount – Handle L.H.	1
26	19–4050	Knob	2
27	71–9021	Handle	1
28	321–13	Screw – Hex Hd. Cap	1
29	16–5999	Panel – Control (Incl. Ref. #2, & 30)	1
30	92–7865	Decal – Panel S.P.	1

*Not Illustrated

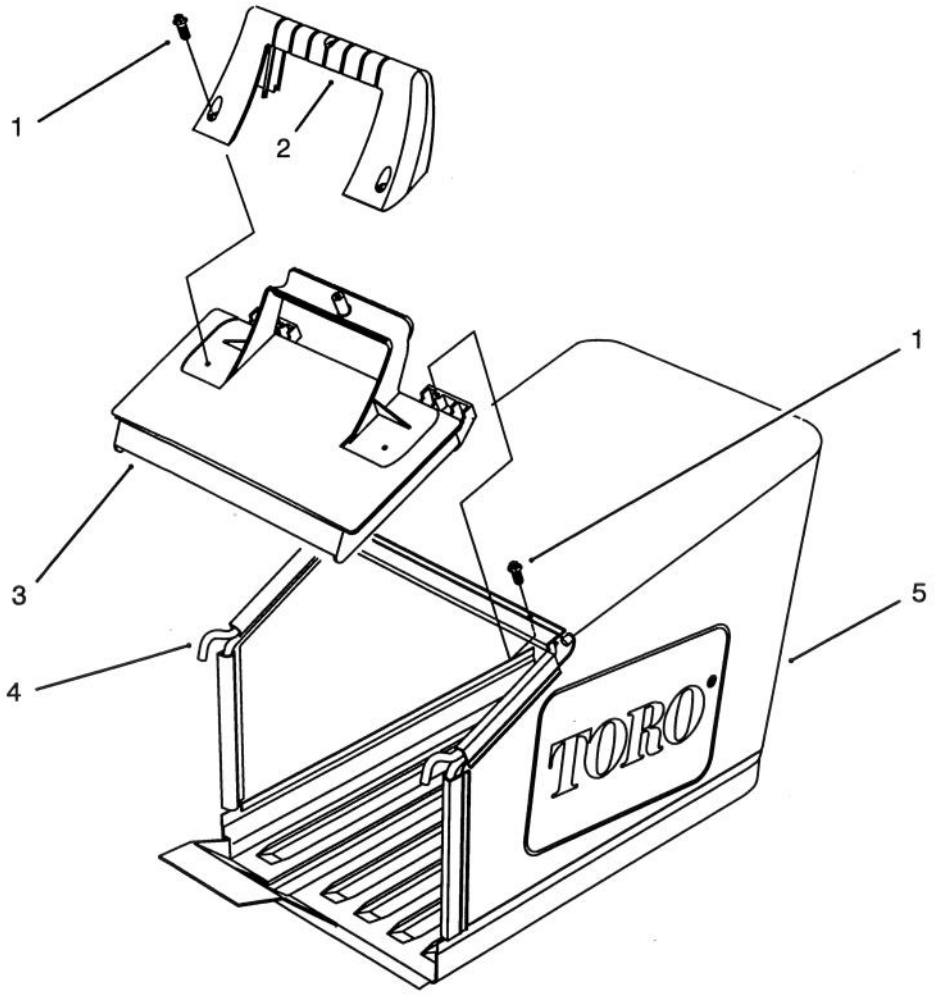

C–1509

GRASS BAG ASSEMBLY

Ref. No.	Part No.	Description	No. Used
1	32144–111	Screw – Thr'd Form	5
2	71–9480	Handle – Door	1
3	71–9470	Door – Bag	1

Ref. No.	Part No.	Description	No. Used
4	71–9900	Frame – Bag	1
5	71–9460	Bag – Grass	1

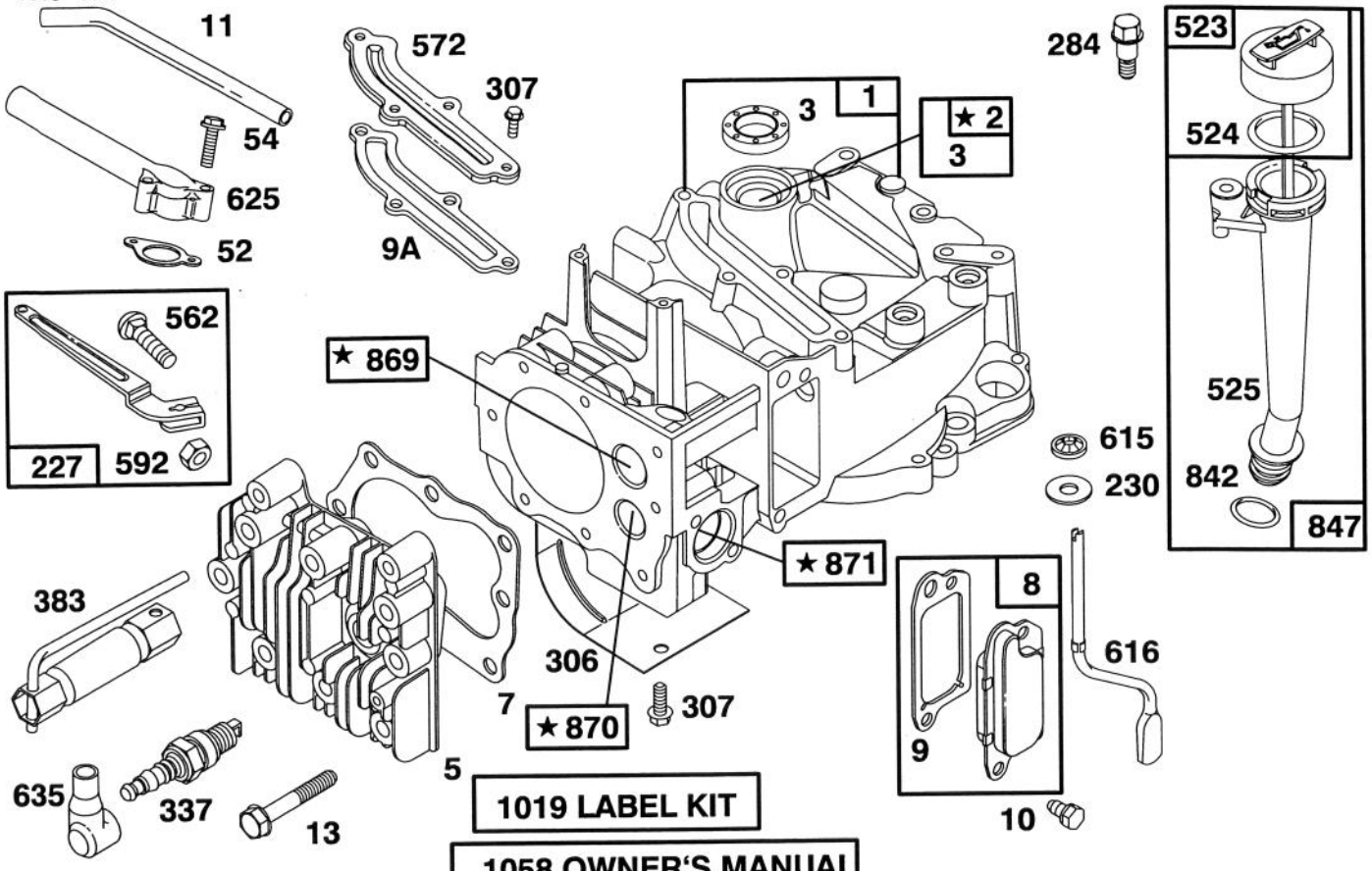

★ REQUIRES SPECIAL TOOLS TO INSTALL. SEE REPAIR INSTRUCTION MANUAL.

Assemblies include all parts shown in frames.

ENGINE BRIGGS & STRATTON MODEL 127802-0513-21

Ref. No.	Part No.	Description	No. Used
1	493260	Cylinder Assembly	1
2	293708	Bushing – Cylinder	1
★3	299819	Seal – Oil	1
5	213861	Head – Cylinder	1
★7	272200	Gasket – Cylinder Head	1
8	495786	Breather – Valve Chamber	1
★9	272481	Gasket – Valve Cover	1
★9A	272238	Gasket – Baffle Plate	1
10	94650	Screw – Breather Mtg.	1
11	231933	Tube – Breather	1
13	94547	Screw – Cylinder Head	1
★52	272199	Gasket – Intake Elbow	1
54	94526	Screw – Intake Elbow Mtg.	1
227	492349	Lever Assembly – Gov.	1
230	67072	Washer – Gov. Crank	1
284	94511	Screw – Hex. Head	1
306	224324	Shield – Cylinder	1
307	94515	Screw – Hex. Head	1
337	802592	Plug – Spark	1
383	89838	Wrench – Spark Plug	1

Ref. No.	Part No.	Description	No. Used
523	495264	Cap With Dipstick – Oil Filler	1
★524	280393	Seal – Filler Tube	1
525	495265	Tube – Oil Filler	1
562	92613	Bolt – Governor Lever	1
572	224328	Baffle – Cylinder	1
592	231082	Nut – Hex.	1
615	94474	Fastener	1
616	262578	Crank – Governor	1
625	281085	Tube – Fuel Intake	1
635	66538	Elbow – Spark Plug	1
★842	280966	Seal – O-Ring	1
847	495263	Oil Fill Tube and Dipstick Assy.	1
869	213512	Seat – Intake Valve	1
870	213513	Seat – Exhaust Valve	1
871	262001	Guide – Exhaust Valve **Note:** 63709 Guide – Intake Valve	1
1019	494256	Label Kit	1
1058	272262	Owner's Manual	1

★ Included in Gasket Set–Part No. 496117.

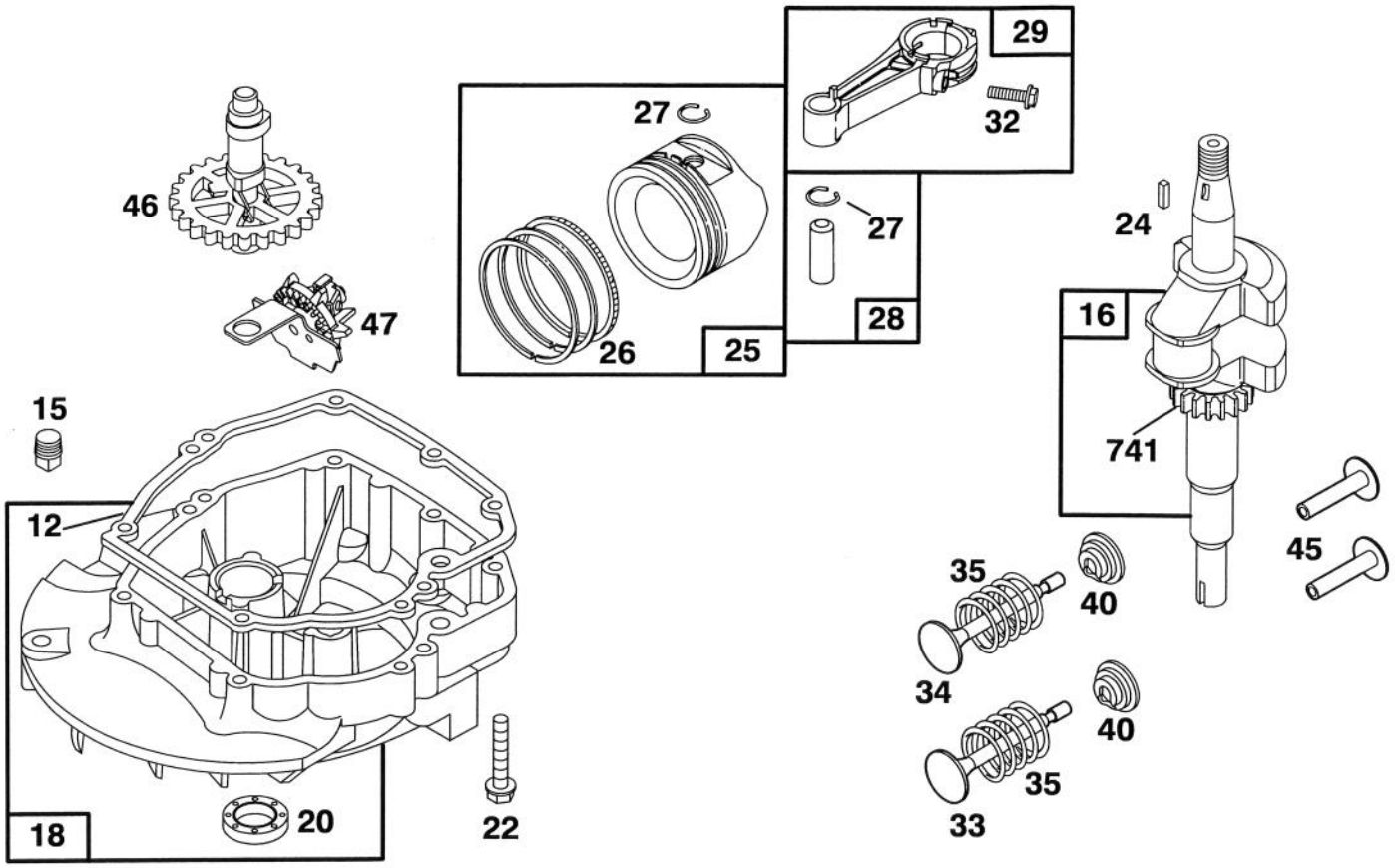

Assemblies include all parts shown in frames.

ENGINE BRIGGS & STRATTON MODEL 127802-0513-21

Ref. No.	Part No.	Description	No. Used
★12	272198	Gasket – Crankcase	1
15	94720	Plug – Oil Drain	1
16	494546	Crankshaft	
		Note: Order 94388 For Timing Gear Key.	1
18	493279	Sump – Engine	1
★20	399781	Seal – Oil	1
22	94220	Screw – Hex. Head	1
		Note: 94612 Screw – Hex. Head (One (1) Used in Hole Nearest Breather.)	1
24	222698	Key – Flywheel	1
25	493262	Piston Assy. (Standard)	1
	493385	Piston Assy. (.010" O.S.)	1
	493386	Piston Assy. (.020" O.S.)	1
	493387	Piston Assy. (.030" O.S.)	1
26	493261	Ring Set (Standard)	1
	493388	Ring Set (.010" O.S.)	1
	493389	Ring Set (.020" O.S.)	1
	493390	Ring Set (.030" O.S.)	1

Ref. No.	Part No.	Description	No. Used
27	26026	Lock – Piston Pin	1
28	298909	Pin – Piston (Standard)	1
	298908	Pin – Piston (.005" O.S.)	1
29	490566	Rod Assembly – Conn.	1
		Note: For Conn. Rod With .020" Undersize Crankpin Bearing – Order No. 490743.	1
32	94699	Screw – Connecting Rod	1
33	262651	Valve – Exhaust	1
34	262652	Valve – Intake	1
35	262224	Spring – Valve	1
40	93312	Retainer – Valve Spring	1
45	262204	Tappet – Valve	1
46	492828	Gear – Cam	1
47	493737	Slinger – Oil	1
741	262598	Gear – Timing	1

★ Included in Gasket Set–Part No. 496117.

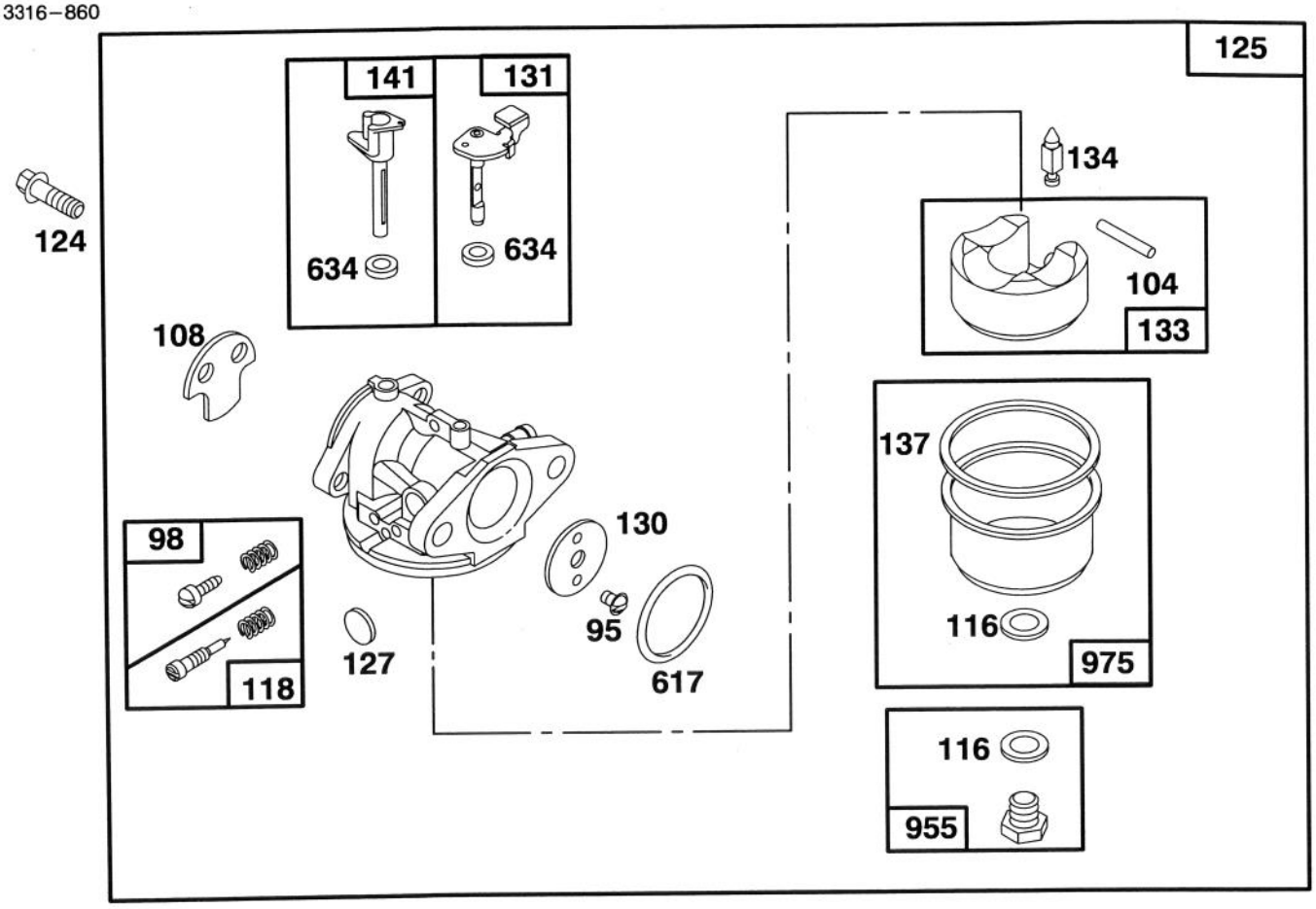

Assemblies include all parts shown in frames.

ENGINE BRIGGS & STRATTON MODEL 127802-0513-21

Ref. No.	Part No.	Description	No. Used
95	94098	Screw – Throttle Valve Mounting	1
98	398185	Screw – Idle Adjustment	1
●104	231371	Pin – Float Hinge	1
108	223471	Valve – Choke	1
●◆116		Gasket–Sealing (Sold in Kit Only)	1
●118	493765	Valve – Needle	1
124	94525	Screw – Carburetor Mtg.	1
125	494217	Carburetor	1
●127		Plug – Welch (Sold in Kit Only)	1
130	223470	Valve – Throttle	1
131	493267	Shaft – Throttle	1

Ref. No.	Part No.	Description	No. Used
133	398187	Float Assy. – Carburetor	1
●134	398188	Valve – Inlet (Includes Seat)	1
●◆137		Gasket – Bowl (Sold in Kit Only.	1
141	494218	Shaft – Choke	1
●◆617	270344	Seal – Fuel Intake Tube	1
●◆634		Washer–Shaft (Sold in Kit Only)	1
955	493869	Screw – Bowl Mtg. (Std.) **Note:** 493763 Screw – Bowl Mtg. (High Altitude)	1
975	493640	Bowl Assy. – Carburetor	1

● Included in Carburetor Kit–Part No. 493762.
◆ Included in Carburetor Gasket Set–Part No. 490937.

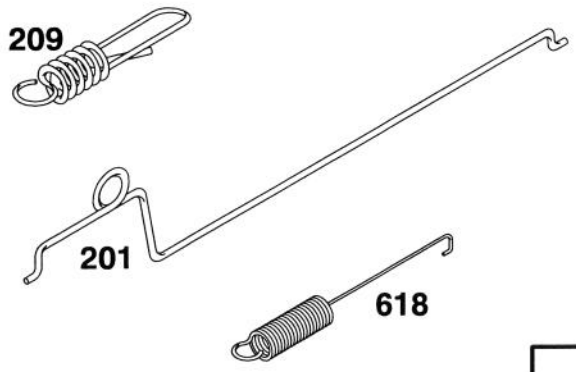

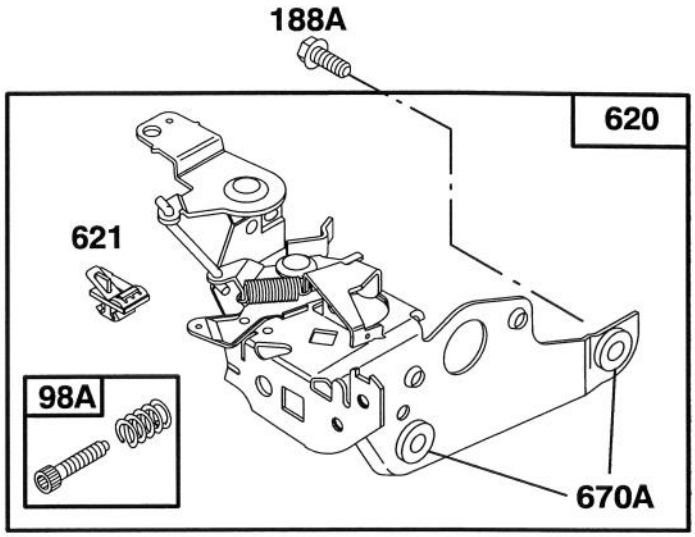

Assemblies include all parts shown in frames.

ENGINE BRIGGS & STRATTON MODEL 127802-0513-21

Ref. No.	Part No.	Description	No. Used
98A	493280	Screw – Speed Adjust	1
188A	94644	Screw – Hex. Head	1
201	262579	Link – Governor	1
209	262661	Spring – Governor	1

Ref. No.	Part No.	Description	No. Used
618	262749	Spring – Return	1
620	495975	Bracket – Carburetor	1
621	396847	Switch – Stop	1
670A	493823	Spacer – Bracket	1

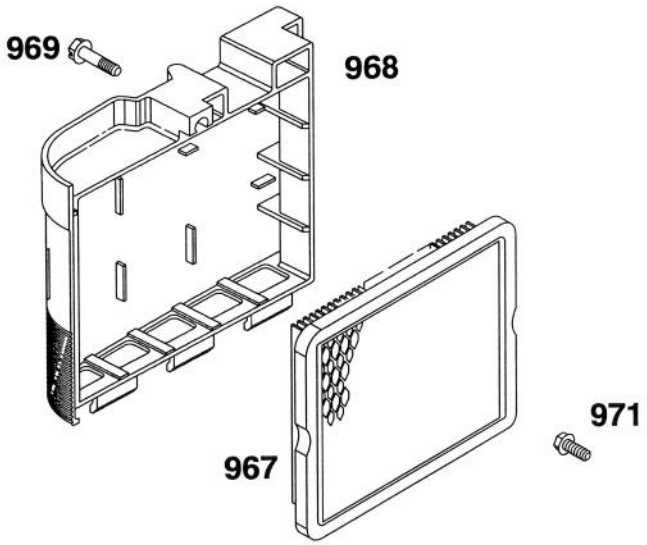

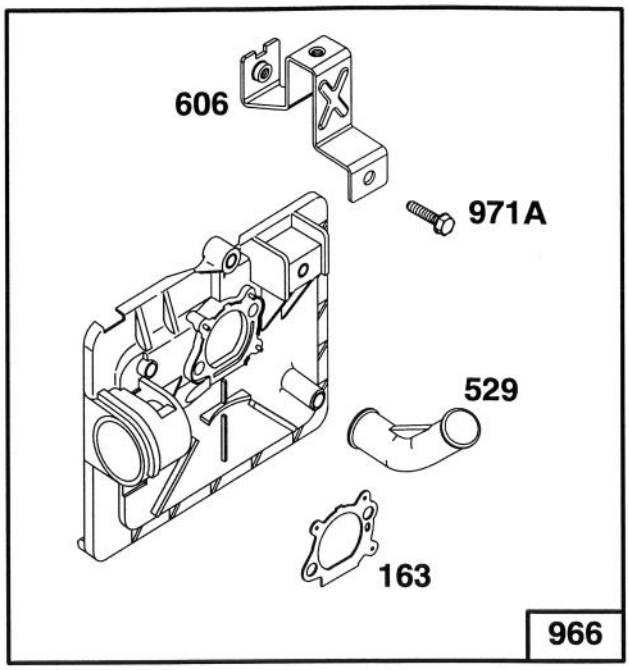

Assemblies include all parts shown in frames.

ENGINE BRIGGS & STRATTON MODEL 127802-0513-21

Ref. No.	Part No.	Description	No. Used
163	272653	Gasket – Air Cleaner	1
529	281299	Grommet – Breather	1
606	224815	Strap – Bracket	1
966	496116	Base – Air Cleaner	1
967	491588	Filter – Air	1

Ref. No.	Part No.	Description	No. Used
968	281340	Cover – Air Cleaner	1
969	94120	Screw – Cover Mtg.	1
971	94121	Screw – Air Cleaner	1
971A	94749	Screw – Hex. Head	1

★ Included in Gasket Set–Part No. 496117.

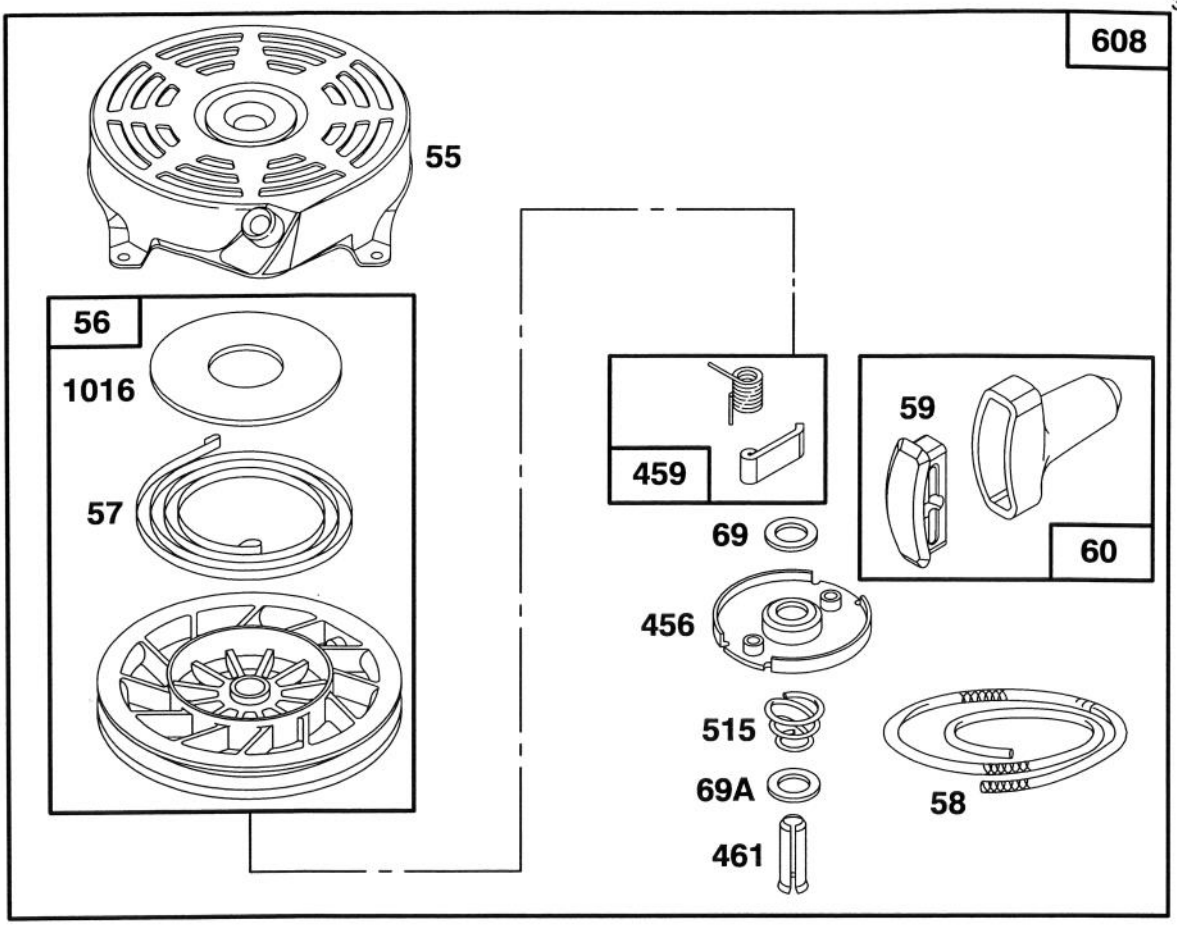

Assemblies include all parts shown in frames.

ENGINE BRIGGS & STRATTON MODEL 127802-0513-21

Ref. No.	Part No.	Description	No. Used
55	492831	Housing – Rewind Starter	1
56	493824	Pulley – Rewind Starter	1
57	262594	Spring – Rewind Starter	1
58	280399	Rope – Rewind Starter	1
59	396892	Insert – Handle	1
60	393152	Handle – Rewind Starter	1
69	280973	Washer – Rewind Starter	1
69A	224322	Washer – Rewind Starter	1
456	224321	Retainer – Rewind Starter	1

Ref. No.	Part No.	Description	No. Used
459	492833	Pawl – Starter	1
461	262626	Pin – Starter	1
515	262625	Spring – Torsion	1
608	493295	Starter Assy. – Rewind	1
		Includes:	
		94128 Screw – Hex. Hd.	
		92987 Nut – Hex.	1
1016	224278	Cover – Rewind Starter	1

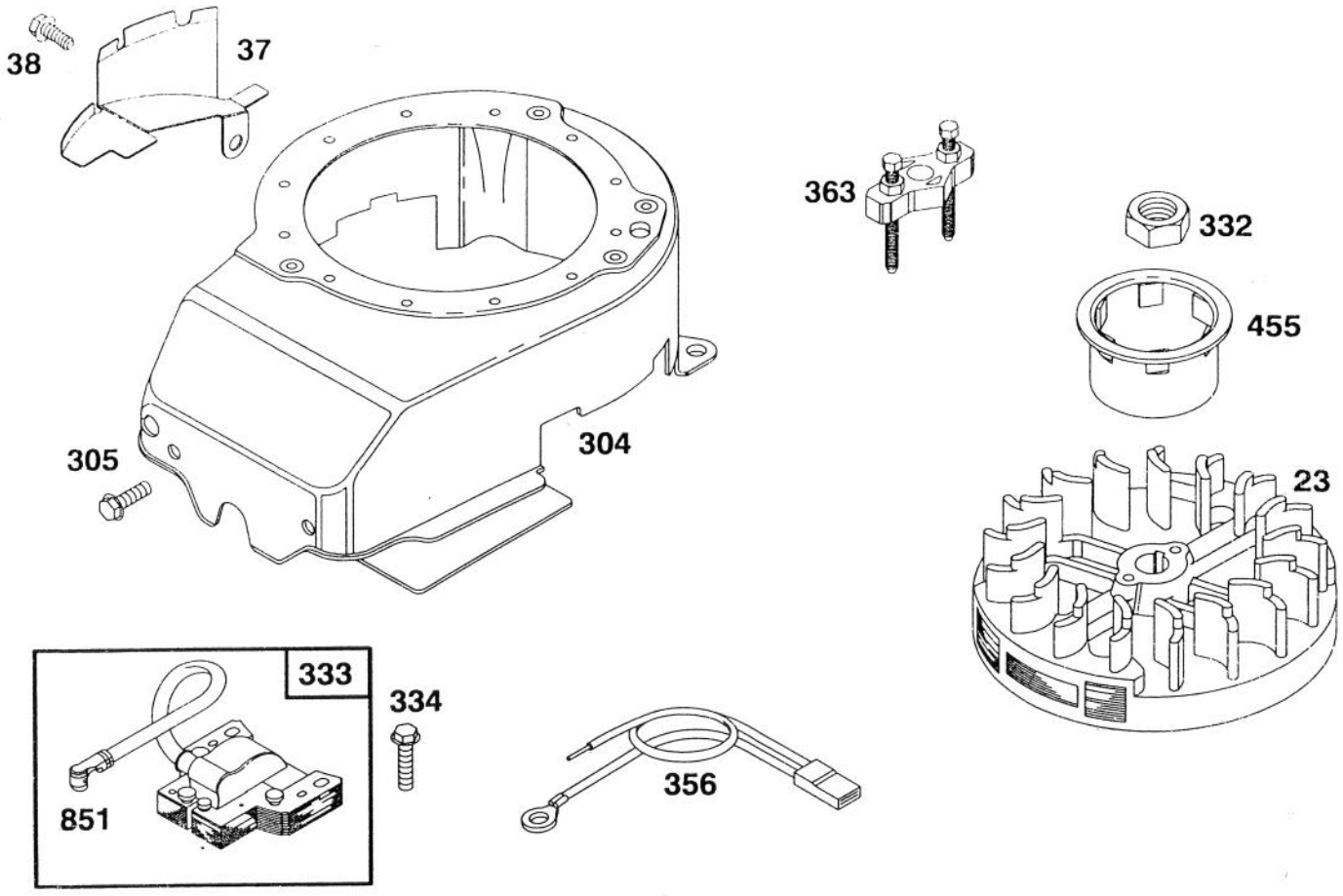

Assemblies include all parts shown in frames.

ENGINE BRIGGS & STRATTON MODEL 127802-0513-21

Ref. No.	Part No.	Description	No. Used
23	492177	Flywheel	1
37	224511	Guard – Flywheel	1
38	94786	Screw – Hex. Head	1
304	493294	Housing – Blower	1
305	94786	Screw – Sem	1
332	92284	Nut – Flywheel	1

Ref. No.	Part No.	Description	No. Used
333	802574	Armature – Magneto	1
334	94731	Screw – Sem	1
356	398808	Wire – Ground	1
363	19069	Puller – Flywheel	1
455	224250	Cup – Starter	1
851	493880	Terminal – Ignition Cable	1

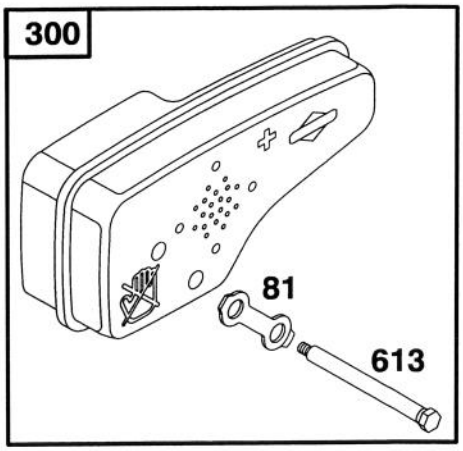

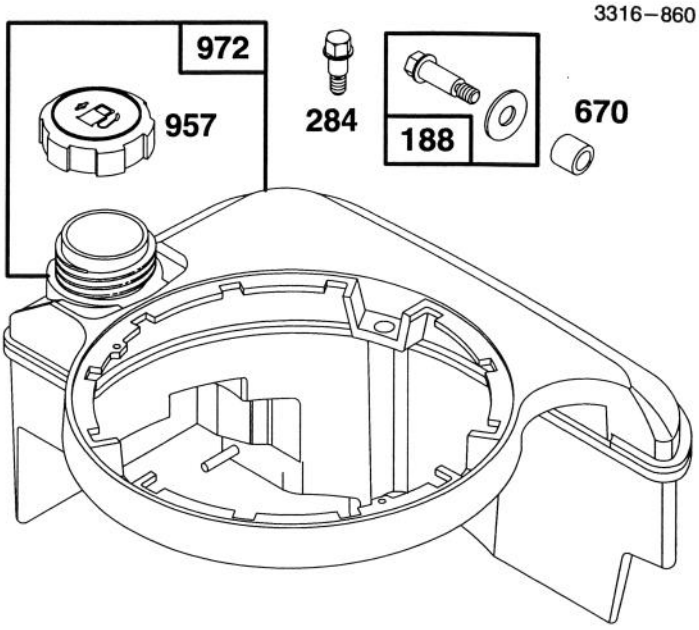

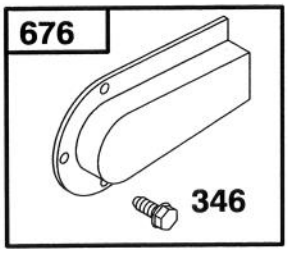

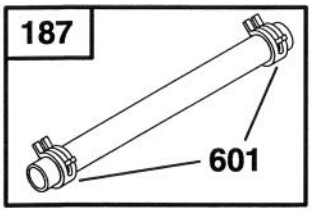

Assemblies include all parts shown in frames.

ENGINE BRIGGS & STRATTON MODEL 127802-0513-21

Ref. No.	Part No.	Description	No. Used
81	223664	Lock – Muffler Screw	1
187	492790	Hose – Fuel	1
188	398540	Screw – Tank Mounting	1
284	94511	Screw – Hex. Head	1
300	496106	Muffler – Exhaust	1
346	93705	Screw – Hex. Head	1

Ref. No.	Part No.	Description	No. Used
601	93807	Clamp – Hose	1
613	94231	Screw – Muffler Mtg.	1
670	280512	Spacer – Fuel Tank	1
676	493871	Deflector – Muffler	1
957	397974	Cap Assy. – Fuel	1
972	495224	Tank Assembly – Fuel	1

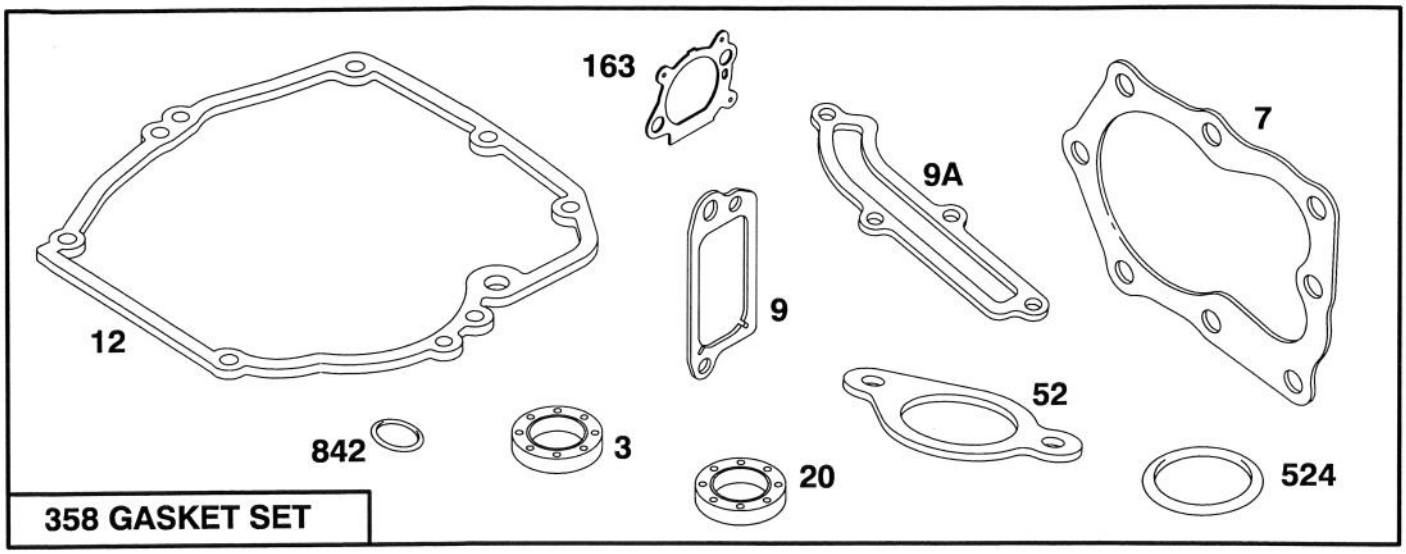

358 GASKET SET

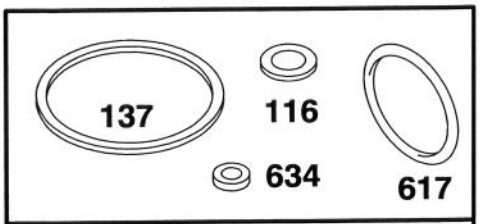

977 CARBURETOR GASKET SET

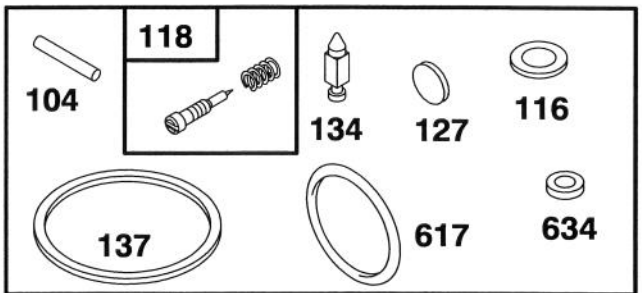

121 CARBURETOR KIT

Assemblies include all parts shown in frames.

ENGINE BRIGGS & STRATTON MODEL 127802-0513-21

Ref. No.	Part No.	Description	No. Used
★3	299819	Seal – Oil	1
★7	272200	Gasket – Cylinder Hd.	1
★9	272481	Gasket – Valve Cover	1
★9A	272238	Gasket – Baffle Plate	1
★12	272198	Gasket – Crankcase	1
★20	399781	Seal – Oil	1
★52	272199	Gasket – Intake Elbow	1
●104	231371	Pin – Float Hinge	1
●◆116		Gasket – Sealing (Sold in Kit Only)	1
●118	493765	Valve – Needle	1
121	493762	Carburetor Kit	1
●127		Plug – Welch (Sold in Kit Only)	1

Ref. No.	Part No.	Description	No. Used
●134	398188	Valve – Inlet (Includes Seat)	1
●◆137		Gasket – Bowl (Sold in Kit Only)	1
★163	272653	Gasket – Air Cleaner	1
358	496117	Gasket Set	1
★524	280393	Seal – Filler Tube	1
●◆617	270344	Seal – Fuel Intake Tube	1
●◆634		Washer – Shaft (Sold in Kit Only)	1
★842	280966	Seal – O-Ring	1
977	490937	Gasket Set – Carburetor	1

● Included in Carburetor Kit–Part No. 493762.
◆ Included in Carburetor Gasket Set–Part No. 490937.
★ Included in Gasket Set–Part No. 496117.

TORO PART NUMBER INDEX

Part No.	Description	Pg. No.	Ref. No.	Qty.
614578	Gearcase	5	10	1
614596	Gear 34 Tooth	5	18	1
614668	Cover – Gear Case	5	2	1
614696	Shaft – Intermediate	5	4	1
14–9959	Wheel & Tire Assembly	4	15	2
16–5989	Housing – Deck	1	22	1
16–5999	Panel – Control	6	29	1
17–9426	Screw – Handle	6	10	2
19–4050	Knob	6	26	2
26–0672	Bolt – Blade	3	8	1
27–6230	Bolt – Wheel	4	13	2
27–6230	Bolt – Wheel	1	33	2
36–4780	Washer – Thrust	5	17	3
36–4791	Washer	5	5	2
38–7820	Bearing – Ball	5	15	1
40–1940	Washer	1	30	2
46–1113	Wheel & Tire Assembly 7	1	32	2
46–5520	Lever – Traction	6	9	1
46–8081	Guide – Rope	6	24	1
46–9900	Bar – Control	6	5	1
47–2890	Bushing	4	35	2
47–6730	Seal – Oil	4	34	2
48–2060	Bearing – Roller	4	25	2
49–2040	Screw – Taptite	5	1	4
55–3760	Pinion – 15 Tooth	5	3	1
60–8750	Bushing	5	6	2
60–8850	Bushing – Output	5	9	2
60–8890	Gear – Bevel Pinion	5	16	1
62–6660	Spacer	5	11	1
62–7550	Pulley – Driver	3	1	1
63–8590	Screw	4	7	2
65–2720	Ring – Retaining	4	17	4
65–4710	Ring – Friction	4	24	2
65–4720	Spring – Compression	4	18	2
65–4740	Washer – Thrust Keyed	4	19	4
65–4750	Gear – Pinion	4	20	2
65–4760	Washer	4	23	2
65–5210	Screw – Thread Forming	1	12	2
66–0236	Control – Throttle	6	1	1
66–0330	Spacer – Support	6	7	2
66–0680	Decal – French Regulation	1	20	1
66–5350	Lever – Control	6	6	1
66–6040	Key – Rocking R.H.	4	*	1
66–6050	Key – Rocking L.H.	4	11	1
71–7630	Cap – Throttle Lower	6	14	1
71–7680	Cover – Throttle Lower	6	13	1
71–7740	Spring – Counterbalance	4	21	1
71–7770	Plate – Securing Rear	4	29	2
71–7820	Pivot – Front	1	28	1
71–7840	Rod – Trigger	4	3	1
71–7860	Grip – Upper	1	13	1
71–7870	Grip – Lower	1	8	1
71–7890	Guide – Belt Rear	1	34	1
71–7900	Cap – Bolt Hinge L.H.	1	15	1
71–7910	Cap – Bolt Hinge R.H.	1	11	1
71–7920	Cover – Belt	1	6	1
71–7930	Trigger – H.O.C.	1	10	1
71–7940	Retainer – Blade	3	4	1
71–7960	Guide – Engine Belt	3	2	1
71–7970	Rod – Link	4	27	1
71–7980	Indicator – H.O.C.	4	28	1
71–7990	Ramp – Discharge	1	26	1
71–8040	Plate – Throttle	6	20	1
71–8060	Spring – Trigger Ret.	4	5	2
71–8080	Saddle – H.O.C.	4	6	2
71–8090	Mount – Handle L.H.	6	*	1
71–8100	Mount – Handle R.H.	6	25	1
71–8110	Cable – Traction	6	16	1
71–8130	Bracket – Control	6	21	1
71–8310	Spring – Compression	6	17	1
71–8450	Cover – Spring	4	22	1
71–8580	Spacer – Door	1	19	2
71–8830	Retainer – Shaft	1	27	2
71–8920	Kicker – Front Right	1	2	1
71–9021	Handle	6	27	1
71–9230	Kicker – Rear Right	1	4	1
71–9250	Kicker – Rear Left	1	21	1
71–9260	Blade – 48cm Recycler	3	5	1
71–9440	Kicker – Front Left	1	23	1
71–9450	V–Belt	4	2	1
71–9460	Bag – Grass	7	5	1
71–9470	Door – Bag	7	3	1
71–9480	Handle – Door	7	2	1
71–9600	Gear Case Ass'y Complete	5	*	1
71–9600	Gear Case Assembly	4	30	1
71–9610	Pulley – Half	5	12	2
71–9620	Shaft – Output	5	7	1
71–9630	Bracket – Traction	4	36	2
71–9800	Door – Discharge	1	18	1
71–9840	Spring – Door	1	17	2
71–9850	Retainer – Belt	4	32	1
71–9900	Frame – Bag	7	4	1
74–1660	Cover – Wheel	4	16	2
74–1670	Spacer – Wheel	4	12	2
80–0510	Stiffener – Blade	3	6	1
86–7990	Screw – Clamp	2	10	1
92–7663	Cover – Wheel	4	14	1
92–7852	Shield – Muffler	2	7	1
92–7863	Decal – Deck	1	1	1
92–7864	Decal – Engine	2	1	1
92–7865	Decal – Panel S.P.	6	30	1
92–7886	Shroud – Engine	2	4	1
92–7887	Screw – Mounting	2	2	2
92–9077	Decal – DIN	1	5	1
92–9088	Decal – Danger Panel	6	2	1
92–9677	Arm – Pivot L.H.	4	10	1
92–9680	Arm – Pivot R.H.	4	31	1
2210–249	Clamp – Casing	2	11	1
2210–316	Stop – Rope	2	3	1
302–26	Fitting – Grease	4	33	2
321–3	Screw – Hex Hd. Cap	6	8	1
321–13	Screw – Hex Hd. Cap	6	28	1
322–29	Screw – Hex Hd. Cap	1	16	2
3253–22	Washer – Lock	3	7	1
3256–24	Washer	5	13	1
3284–5	Pin – Groove	1	9	1
3290–378	Tie – Cable	2	5	1
3290–378	Tie – Cable	6	18	1
3296–5	Nut	5	14	1
3296–5	Nut – Lock	4	9	2
3296–5	Nut – Lock	1	29	2
3296–29	Nut – Lock	6	3	2
3296–42	Nut – Lock	6	4	2
3296–42	Nut – Lock	6	23	2

*Not Illustrated

TORO PART NUMBER INDEX (Cont.)

Part No.	Description	Pg. No.	Ref. No.	Qty.
32104–121	Screw – Tapping	6	12	1
32112–11	Nut – Push	1	25	1
32112–13	Nut – Push	4	8	1
32121–63	Pin – Groove	5	8	2
32144–4	Screw – Tapping	4	1	6
32144–4	Screw – Tapping	3	3	3
32144–4	Screw – Tapping	1	24	8
32144–31	Screw – Tapping	4	4	1
32144–70	Screw – Tapping	1	7	1
32144–73	Screw – Hex Washer Hd.	2	6	3
32144–97	Screw – Phillips Hd.	6	11	5
32144–97	Screw – Phillips Hd.	1	14	2
32144–97	Screw – Phillips Hd.	6	22	5
32144–98	Screw – Phillips Hd.	6	19	4
32144–99	Screw – Phillips Hd.	6	15	2
32144–102	Screw – Engine	2	8	3
32144–111	Screw – Phillips Hd.	1	3	8
32144–111	Screw – Thr'd Form	7	1	5
32151–93	Ring – Grip	4	26	1

*Not Illustrated