Part No. 92796SL, Rev. C

Service Manual

Reelmaster® 5100-D

Preface

The purpose of this publication is to provide the service technician with information for troubleshooting, testing, and repair of major systems and components on the Reelmaster 5100-D

REFER TO THE REELMASTER 5100-D TRACTION UNIT AND CUTTING UNIT OPERATOR'S MANUALS FOR OPERATING, MAINTENANCE AND ADJUSTMENT INSTRUCTIONS. Space is provided in Chapter 2 of this book to insert the Operator's Manuals and Parts Catalogs for your machine. Replacement Operator's Manuals are available by sending complete Model and Serial Number of traction unit and cutting unit to:

The Toro Company
8111 Lyndale Avenue South
Bloomington, MN 55420

The Toro Company reserves the right to change product specifications or this publication without notice.

This safety symbol means DANGER, WARNING, or CAUTION, PERSONAL SAFETY INSTRUCTION. When you see this symbol, carefully read the instructions that follow. Failure to obey the instructions may result in personal injury.

NOTE: A NOTE will give general information about the correct operation, maintenance, service, testing or repair of the machine.

IMPORTANT: The IMPORTANT notice will give important instructions which must be followed to prevent damage to systems or components on the machine.





© The Toro Company - 1992 - 1997, 2004

This page is blank.

Table Of Contents

Chapter 1 - Safety

Safety Instructions . . . . . 1 - 1

Chapter 2 - Product Records and Manuals

Product Records . . . . . 2 - 1
Equivalents and Conversions . . . . . 2 - 2
Torque Specifications . . . . . 2 - 3
Maintenance Interval Charts . . . . . 2 - 4
Equipment Operation
and Service History Report . . . . . 2 - 5

Chapter 3 - Mitsubishi Diesel Engine

Introductions . . . . . 3 - 2
Specifications . . . . . 3 - 3
Special Tools . . . . . 3 - 11
Adjustments . . . . . 3 - 13
Troubleshooting . . . . . 3 - 15
Testing . . . . . 3 - 18
Preparation for Engine Repair . . . . . 3 - 25
External Engine Component Repair . . . . . 3 - 26
Governor System Repairs . . . . . 3 - 31
Fuel System Repairs . . . . . 3 - 36
Removing and Installing the Engine . . . . . 3 - 44
Cylinder Head Overhaul . . . . . 3 - 46
Cylinder Block Overhaul . . . . . 3 - 53

Chapter 4 - Hydraulic System

Specifications . . . . . 4 - 2
General Information . . . . . 4 - 3
Hydraulic Schematic . . . . . 4 - 6
Hydraulic Flow Diagrams . . . . . 4 - 7
Special Tools . . . . . 4 - 12
Troubleshooting . . . . . 4 - 15
Testing . . . . . 4 - 25
Adjustments . . . . . 4 - 33
Transmission Repairs . . . . . 4 - 35
Mowing Circuit Repairs . . . . . 4 - 54
Hydraulic Reservoir and Filter . . . . . 4 - 67

Chapter 5 - Electrical System

Wiring Schematics and Diagrams . . . . . 5 - 2
Special Tools . . . . . 5 - 5
Troubleshooting . . . . . 5 - 7
Testing . . . . . 5 - 18
Repairs . . . . . 5 - 32

Chapter 6 - Differential Axle

Introduction . . . . . 6 - 1
Torque Specifications . . . . . 6 - 2
Repairs . . . . . 6 - 3

Chapter 7 - Steering and Brakes

Introduction . . . . . 7 - 2
Schematics . . . . . 7 - 3
Specifications . . . . . 7 - 4
Special Tools . . . . . 7 - 4
Troubleshooting . . . . . 7 - 5
Testing . . . . . 7 - 7
Adjustments . . . . . 7 - 9
Repairs . . . . . 7 - 11

Chapter 8 - Cutting Units

Specifications . . . . . 8 - 2
Special Tools . . . . . 8 - 3
Troubleshooting . . . . . 8 - 5
Set-up and Adjustments . . . . . 8 - 7
Repairs . . . . . 8 - 15

Chapter 9 - 4WD Rear Axle

Specifications . . . . . 9 - 2
General Information . . . . . 9 - 3
Adjustments . . . . . 9 - 4
Repairs . . . . . 9 - 5

This page is blank.

Chapter 1

Safety

Table of Contents

SAFETY INSTRUCTIONS 1
Before Operating 1
While Operating. 2
While Doing Maintenance, Troubleshooting, Testing, Adjustments or Repairs 3

Safety Instructions

The Reelmaster 5100-D was tested and certified by TORO for compliance with the B71.4-1990 specifications of the American National Standards Institute's safety standards for riding mowers when 65 lbs. of ballast is added to rear wheels and a rear weight kit, part no. 75-6690 is installed. Although hazard control and accident prevention partially are dependent upon the design and configuration of the machine, these factors are also dependent upon the awareness, concern, and proper training of the personnel involved in the operation, transport, maintenance, and storage of the machine.

CAUTION

Improper operation, maintenance, troubleshooting, testing, adjustments or repairs of the machine can result in injury or death.To reduce the potential for injury or death, comply with the following safety instructions.

Before Operating

1. Read and understand the Operator's Manual before starting, operating, maintaining or repairing the machine. Become familiar with the controls and know how to stop the machine and engine quickly. Replacement Operator's Manuals are available by sending complete Model and Serial Number of traction unit and cutting units to:

The Toro Company
8111 Lyndale Avenue South
Minneapolis, MN 55420

Use the Model and Serial Number when referring to your machine. If you have questions about this Service Information, please contact:

The Toro Company
Commercial Service Department
8111 Lyndale Avenue South
Minneapolis, MN 55420

2. Never allow children to operate the machine. Do not allow adults to operate the machine without proper instruction. Only trained operators who have read the Operator's Manual should operate the machine.

3. Never operate the machine when under the influence of drugs or alcohol.

4. Keep all shields, safety devices and decals in place. If a shield, safety device or decal is defective or damaged, repair or replace it before operating the machine. Also tighten any loose nuts. bolts or screws to ensure machine is in safe operating condition.

5. Always wear substantial shoes. Do not operate machine while wearing sandals, tennis shoes, sneakers .or when barefoot. Do not wear lose fitting clothing that could get caught in moving parts and possibly cause personal injury. Wearing safety glasses, safety shoes, long pants and a helmet is advisable and required by some local ordinances and insurance regulations.

6. Assure interlock switches are adjusted correctly so engine cannot be started unless traction pedal is in NEUTRAL and cutting units are DISENGAGED.

7. Remove all debris or other objects that might be picked up and thrown by the reels or fast moving components from other attached implements. Keep all bystanders away from operating area.

8. Since diesel fuel is highly flammable, handle it carefully:

A. Use an approved fuel container.

B. Do not remove fuel tank cap while engine is hot or running.

C. Do not smoke while handling fuel.

D. Fill fuel tank outdoors and only to within an inch of the top of the tank, not the filler neck. Do not overfill.

E. Wipe up any spilled fuel.

While Operating

9. Sit on the seat when starting and operating the machine.

10. Before starting the engine:

A. Engage the parking brake.

B. Make sure traction pedal is in NEUTRAL and the ENABLE / DISABLE switch is in DISABLE.

C. After engine is started, release parking brake and keep foot off traction pedal. Machine must not move. If movement is evident, the neutral return mechanism is adjusted incorrectly; therefor, shut engine off and adjust until machine does not move when traction pedal is released.

11. Seating capacity is one person. Therefore, never carry passengers.

12. Do not run engine in a confined area without adequate ventilation. Exhaust fumes are hazardous and could possibly be deadly.

13. Check interlock switches daily for proper operation. If a switch fails, replace it before operation the machine. The interlock system is for your protection, so do not bypass it. Replace all interlock switches every two years.

14. Using the machine demands attention. To prevent loss of control:

A. Operate only in daylight or when there is good artificial light.

B. Drive slowly.

C. Watch for holes or other hidden hazards.

D. Look behind machine before backing up.

E. Do not drive close to a sand trap, ditch, creek or other hazard.

F. Reduce speed when making sharp turns and turning on a hillside.

G. Avoid sudden stops and starts.

15. Traverse slopes carefully. Do not start or stop suddenly when traveling uphill.

16. Operator must be skilled and trained in how to drive on hillsides. Failure to use caution on slopes or hills may cause loss of control and vehicle to tip or roll possibly resulting in personal injury or death. On 4 wheel drive models, always use the seat belt and ROPS together.

17. If engine stalls or looses headway and cannot make it to the top of a slope, do not turn machine around. Always back slowly straight down the slope.

18. DON'T TAKE AN INJURY RISK! When a person or pet appears unexpectedly in or near the mowing area, STOP MOWING. Careless operation, combined with terrain angles, ricochets, or improperly positioned guards can lead to thrown object injuries. Do not resume mowing until area is cleared.

19. Do not touch engine, muffler or exhaust pipe while engine is running or soon after is stopped. These areas could be hot enough to cause burns.

20. If cutting unit strikes a solid object or vibrates abnormally, stop immediately, turn engine off, set parking brake and wait for all motion to stop. Inspect for damage. If reel or bedknife is damaged, repair or replace it before operating. Do not attempt to free blocked cutting unit by reversing its reel direction. Damage to the reel may result.

21. Before getting off the seat:

A. Move traction pedal to neutral.

B. Set parking brake.

C. Disengage cutting units and wait for reels to stop.

D. Stop engine and remove key from switch.

E. Do not park on slopes unless wheels are chocked or blocked.

While Doing Maintenance, Troubleshooting, Testing, Adjustments or Repairs

22. Before servicing or making adjustments, stop the engine and remove the key from the ignition switch.

23. Make sure machine is in safe operating condition by keeping all nuts, bolts and screws tight.

24. Frequently inspect all hydraulic line connectors and fittings. Make sure all hydraulic hoses and lines are in good condition before applying pressure to the system.

25. Keep body and hands away from pin hole leaks or nozzles that eject high pressure hydraulic fluid. Use cardboard or paper to find hydraulic leaks. Hydraulic fluid escaping under pressure can penetrate the skin and cause injury. Fluid accidentally injected into the skin must be surgically removed within a few hours by a doctor or gangrene may occur.

26. Before disconnecting, or performing any work on the hydraulic system, lower the cutting units to the ground and stop the engine so all pressure is relieved.

27. Be sure you understand a service procedure before working on the machine. Unauthorized modifications to the machine may impair the function, safety and life of the machine. If major repairs are ever needed, or assistance is desired, contact your TORO Distributor.

28. To reduce potential fire hazard, keep engine area free of excessive grease, grass, leaves and dirt. Clean protective screen on front of engine frequently. Do not use flammable solvents for cleaning parts. Do not use diesel fuel, kerosene or gasoline.

29. THE ASBESTOS BRAKE LININGS CONTAIN ASBESTOS FIBERS. BREATHING ASBESTOS DUST MAY BE HAZARDOUS TO YOUR HEALTH AND MAY CAUSE SERIOUS RESPIRATORY OR OTHER BODILY HARM. For your protection:

A. AVOID CREATING DUST.

B. DO NOT remove brake drum without proper equipment.

C. DO NOT work on brake linings without proper protective equipment.

D. DO NOT replace brake linings without proper protective equipment.

E. DO NOT attempt to sand, grind, chisel, file, hammer, or alter brake linings in any manner without proper protective equipment.

F. Follow O.S.H.A. standards for proper protective devices to be used when working with asbestos materials.

30. If the engine must be running to perform an inspection or procedure, use extreme caution. Always use two people, with the operator at the controls able to see the person doing the inspection or procedure. Keep hands, feet, clothing, and body away from cutting units and other moving parts.

31. Do not overspeed the engine by changing governor setting.

32. Shut engine off before checking or adding oil to the engine crankcase.

33. Disconnect the cables from the battery before servicing the machine. If battery voltage is required for troubleshooting or test procedures, temporarily connect the battery.

34. Do not charge a frozen battery because it can explode and cause injury. Let the battery warm to 60° F (15.5^{o} C) before connecting to a charger. Charge the battery in a well-ventilated place so that gases produced while charging can dissipate. Since the gases are explosive, keep open flame and electrical spark away from the battery; do not smoke. Nausea may result if the gases are inhaled. Unplug the charger from the electrical outlet before connecting or disconnecting the charger leads from the battery posts.

35. Wear safety glasses, goggles or a face shield to prevent possible eye injury when using compressed air for cleaning or drying components.

36. Failure to follow proper procedures when mounting a tire on a wheel or rim can produce an explosion which may result in serious injury. Do not attempt to mount a tire unless you have the proper equipment and experience to perform the job. Have it done by your Toro Distributor or a qualified tire service.

37. When changing attachments or performing other service, use the correct blocks and hoists. Always use jackstands to safely support the machine when it is raised by a jack or hoist.

38. Do not use your hand to prevent cutting unit reel from turning while servicing; this can result in personal injury. Use a 1-1/2 in. thick x 4 in. wide x 8 in. long piece of hardwood inserted into front of cutting unit between reel blades.

39. For optimum performance and safety, use genuine Toro replacement parts and accessories. Replacement parts and accessories made by other manufacturers may result in non-conformance with the safety standards, and the warranty may be voided.

Chapter 2

Product Records and Manuals

Table of Contents

PRODUCT RECORDS. 1
EQUIVALENTS AND CONVERSIONS 2
Decimal and Millimeter Equivalents 2
U.S. to Metric Conversions 2
TORQUE SPECIFICATIONS 3
Capscrew Markings and Torque Values - U.S. . . 3
Capscrew Markings and Torque Values - Metric . 3
MAINTENANCE INTERVAL CHART 4
OPERATON AND SERVICE HISTORY REPORT

Product Records

Record information about your Reelmaster 5100-D on the OPERATION AND SERVICE HISTORY REPORT form. Use this information when referring to your machine.

Insert Operator's Manuals and Parts Manuals for your Reelmaster 5100-D at the end of this section.

Equivalents and Conversions

Decimal and Millimeter Equivalents

Fractions	Decimals	mm	Fractions	Decimals	mm
1/64	0.015625	— 0.397	33/64	0.515625	— 13.097
1/32	0.03125	— 0.794	17/32	0.53125	— 13.494
3/64	0.046875	— 1.191	35/64	0.546875	— 13.891
1/16	0.0625	— 1.588	9/16	0.5625	— 14.288
5/64	0.078125	— 1.984	37/64	0.578125	— 14.684
3/32	0.9375	— 2.381	19/32	0.59375	— 15.081
7/64	0.109275	— 2.778	39/64	0.609375	— 15.478
1/8	0.1250	— 3.175	**5/8**	0.6250	— 15.875
9/64	0.140625	— 3.572	41/64	0.640625	— 16.272
5/32	0.15625	— 3.969	21/32	0.65625	— 16.669
11/64	0.171875	— 4.366	43/64	0.671875	— 17.066
3/16	0.1875	— 4.762	11/16	0.6875	— 17.462
13/64	0.203125	— 5.159	45/64	0.703125	— 17.859
7/32	0.21875	— 5.556	23/32	0.71875	— 18.256
15/64	0.234375	— 5.953	47/64	0.734375	— 18.653
1/4	0.2500	— 6.350	**3/4**	0.7500	— 19.050
17/64	0.265625	— 6.747	49/64	0.765625	— 19.447
9/32	0.28125	— 7.144	25/32	0.78125	— 19.844
19/64	0.296875	— 7.541	51/64	0.796875	— 20.241
5/16	0.3125	— 7.938	13/16	0.8125	— 20.638
21/64	0.328125	— 8.334	53/64	0.828125	— 21.034
11/32	0.34375	— 8.731	27/32	0.84375	— 21.431
23/64	0.359375	— 9.128	55/64	0.859375	— 21.828
3/8	0.3750	— 9.525	**7/8**	0.8750	— 22.225
25/64	0.390625	— 9.922	57/64	0.890625	— 22.622
13/32	0.40625	— 10.319	29/32	0.90625	— 23.019
27/64	0.421875	— 10.716	59/64	0.921875	— 23.416
7/16	0.4375	— 11.112	15/16	0.9375	— 23.812
29/64	0.453125	— 11.509	61/64	0.953125	— 24.209
15/32	0.46875	— 11.906	31/32	0.96875	— 24.606
31/64	0.484375	— 12.303	63/64	0.984375	— 25.003
1/2	0.5000	— 12.700	**1**	1.000	— 25.400
1 mm = 0.03937 in.			**0.001 in. = 0.0254 mm**		

U.S to Metric Conversions

	To Convert	Into	Multiply By
Linear Measurement	Miles	Kilometers	1.609
	Yards	Meters	0.9144
	Feet	Meters	0.3048
	Feet	Centimeters	30.48
	Inches	Meters	0.0254
	Inches	Centimeters	2.54
	Inches	Millimeters	25.4
Area	Square Miles	Square Kilometers	2.59
	Square Feet	Square Meters	0.0929
	Square Inches	Square Centimeters	6.452
	Acre	Hectare	0.4047
Volume	Cubic Yards	Cubic Meters	0.7646
	Cubic Feet	Cubic Meters	0.02832
	Cubic Inches	Cubic Centimeters	16.39
Weight	Tons (Short)	Metric Tons	0.9078
	Pounds	Kilograms	0.4536
	Ounces (Avdp.)	Grams	28.3495
Pressure	Pounds/Sq. In.	Kilopascal	6.895
	Pounds/Sq. In.	Bar	0.069
Work	Foot-pounds	Newton-Meters	1.356
	Foot-pounds	Kilogram-Meters	0.1383
	Inch-pounds	Kilogram-Centimeters	1.152144
Liquid Volume	Quarts	Liters	0.9463
	Gallons	Liters	3.785
Liquid Flow	Gallons/Minute	Liters/Minute	3.785
Temperature	Fahrenheit	Celsius	1. Subract 32° 2. Multiply by 5/9

Torque Specifications

Use these torque values when specific torque values are not given. DO NOT use these values in place of specified values. Torque values listed are for lubricated threads. Plated threads are considered to be lubricated.

Capscrew Markings and Torque Values - U.S. Customary

SAE Grade Number	5				8			
Capscrew Head Markings					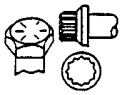			
Capscrew Body Size	Capscrew Torque - Grade 5				Capscrew Torque - Grade 8			
	Cast Iron		Aluminum		Cast Iron		Aluminum	
	ft-lb	Nm	ft-lb	Nm	ft-lb	Nm	ft-lb	Nm
1/4-20	7	9	6	8	11	15	9	12
-28	9	12	7	9	13	18	10	14
5/16-18	15	20	12	16	22	30	18	24
-24	17	23	14	19	24	33	19	25
3/8-16	30	40	20	25	40	55	30	40
-24	30	40	25	35	45	60	35	45
7/16-14	45	60	35	45	65	90	50	65
-20	50	65	40	55	70	95	55	75
1/2-13	70	95	55	75	95	130	75	100
-20	75	100	60	80	110	150	90	120
9/16-12	100	135	80	110	140	190	110	150
-18	110	150	85	115	155	210	125	170
5/8-11	135	180	110	150	190	255	150	205
-18	155	210	120	160	215	290	170	230
3/4-10	240	325	190	255	340	460	270	365
-16	270	365	210	285	380	515	300	410
7/8-9	360	490	280	380	550	745	440	600
-14	390	530	310	420	610	825	490	660
1-8	530	720	420	570	820	1100	660	890
-14	590	800	480	650	890	1200	710	960

Capscrew Markings and Torque Values – Metric

Commercial Steel Class	8.8				10.9				12.9			
Capscrew Head Markings	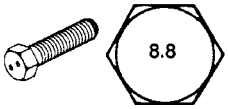				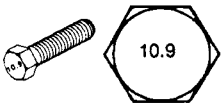				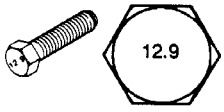			
Thread Diameter mm	Capscrew Torque - Class 8.8				Capscrew Torque - Class 10.9				Capscrew Torque - Class 12.9			
	Cast Iron		Aluminum		Cast Iron		Aluminum		Cast Iron		Aluminum	
	ft-lb	Nm	ft-lb	Nm	ft-lb	Nm	ft-lb	Nm	ft-lb	Nm	ft-lb	Nm
6	5	9	4	7	9	14	7	11	9	14	7	11
7	9	14	7	11	14	18	11	14	18	23	14	18
8	18	25	14	18	23	32	18	25	27	36	21	28
10	30	40	25	30	45	60	35	45	50	70	40	55
12	55	70	40	55	75	105	60	80	95	125	75	100
14	85	115	65	90	120	160	95	125	145	195	110	150
16	130	180	100	140	175	240	135	190	210	290	165	220
18	170	230	135	180	240	320	185	250	290	400	230	310

Maintenance Interval Chart

REELMASTER 5100-D/5300-D
QUICK REFERENCE AID

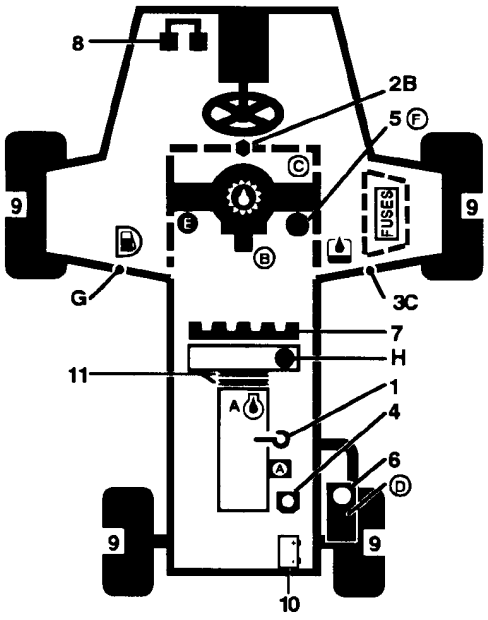

CHECK/SERVICE (daily)

1. OIL LEVEL, ENGINE
2. OIL LEVEL, TRANSMISSION
3. OIL LEVEL, HYDRAULIC TANK
4. COOLANT LEVEL, RADIATOR
5. FUEL /WATER SEPARATOR
6. PRECLEANER – AIR CLEANER
7. RADIATOR SCREEN
8. BRAKE FUNCTION
9. TIRE PRESSURE
10. BATTERY
11. BELTS (FAN, ALT.)

GREASING – SEE OPERATOR'S MANUAL

FLUID SPECIFICATIONS/CHANGE INTERVALS

SEE OPERATOR'S MANUAL FOR INITIAL CHANGES.	FLUID TYPE	CAPACITY	CHANGE INTERVAL		FILTER PART NO.
			FLUID	FILTER	
A. ENGINE OIL	SAE 10W-30CD	3.9 QTS. † 4.0 QTS. ††	50 HRS.	100 HRS.	67-4330 † 93-4295 ††
B. TRANSMISSION OIL	MOBIL 424	5 QTS.*	800 HRS.	800 HRS.	75-1330
C. HYD. CIRCUIT OIL	MOBIL 424	8.5 GALS.*	800 HRS.	SEE INDICATOR	75-1310
D. AIR CLEANER				400 HRS.	27-7110
E. FUEL PUMP				400 HRS.	43-2550
F. WATER SEPARATOR				400 HRS.	63-8300
G. FUEL TANK	NO. 2-Diesel	10 GALS.	Drain and flush, 2 yrs.		
H. COOLANT	50/50 Ethylene glycol/water	7 QTS. † 9.6 QTS. ††	Drain and flush, 2 yrs.		

* INCLUDING FILTER

† REELMASTER 5100-D
†† REELMASTER 5300-D

93-3601



EQUIPMENT OPERATION AND SERVICE HISTORY REPORT
for
REELMASTER® 223-D, 5100-D, AND 5300-D

TORO Model and Serial Number:_____-_____

Engine Numbers: _____

Transmission Numbers: _____

Drive Axle(s) Numbers: _____

Date Purchased: _____ Warranty Expires_____

Purchased From: _____

_____

_____

Contacts: Parts _____ Phone_____

Service _____ Phone_____

Sales _____ Phone_____

See your TORO *Distributor/Dealer for other Publications, Manuals, and Videos from* The TORO Company.

REELMASTER® 223-D, 5100-D, and 5300-D Maintenance Schedule

Minimum Recommended Maintenance Intervals:

Maintenance Procedure	Maintenance Interval & Service				
	Every 50hrs	Every 100hrs	Every 200hrs	Every 400hrs	Every 800hrs
Check Battery Fluid Level Check Battery Cable Connections Lubricate All Grease Fittings Change Engine Oil Inspect Air Filter, Dust Cup, and Baffle	*A Level Service*				
† Check Fan and Altenator Belt Tension ‡ Replace Engine Oil Filter Inspect Cooling System Hoses		*B Level Service*			
Drain Moisture-Hyd. Tank Drain Moisture-Fuel Tank Check Reel Bearing Preload Adjustment † Torque Wheel Lug Nuts			*C Level*		
Service Air Filter Replace Electric Fuel Pump Filter Replace Fuel/WaterSeparator Filter Inspect Traction Linkage Movement ‡ Torque Head and Adjust Valves ‡ Check Engine RPM (idle and full throttle)				*D Level*	
Change Hydraulic Fluid Change Transmission Fluid † Replace Transmission Filter Check Rear Wheel Toe-in Rear Axle Service - pack Rear Wheel Bearings (2WD) - change Rear Axle Lubricant (4WD)					*E Level Service*

† Initial break in at 10 hours

‡ Initial break in at 50 hours

Replace Moving Hoses
Replace Safety Switches
Coolant System - Flush/Replace Fluid
Fuel Tank - Drain/Flush
Hydraulic Tank - Drain/Flush

Annual Recommendations:
Items listed are recommended every 1600 hours or 2 years whichever occurs first.

(See Operator's and Service Manual for specifications and procedures)

REELMASTER® 223-D, 5100-D and 5300-D Daily Maintenance Check List

Unit Designation:_____

Daily Maintenance:(duplicate this page for routine use) TORO ID#:_____-_____

Maintenance Check Item	Daily Maintenance Check For Week Of _____						
	MON _____HRS	TUES _____HRS	WED _____HRS	THURS _____HRS	FRI _____HRS	SAT _____HRS	SUN _____HRS
✓ Safety Interlock Operation							
✓ Brake Operation							
✓ Engine Oil & Fuel Level							
✓ Cooling System Fluid Level							
Drain Water/Fuel Separator							
✓ Air Filter/Pre-Cleaner Condition							
✓ Radiator & Screen for Debris							
✓ Unusual Engine Noises[1]							
✓ Unusual Operating Noises							
✓ Transmission Oil Level							
✓ Hydraulic System Oil Level							
✓ Hydraulic Filter Indicator[2]							
✓ Hydraulic Hoses for Damage							
✓ Fluid Leaks							
✓ Tire Pressure							
✓ Instrument Operation							
✓ Reel-to-Bedknife Adjustment							
✓ Height-of-Cut Adjustment							
✓ Cutting Units Shear Pin							
Lubricate All Grease Fittings[3]							
Touch-up damaged paint							

[1] = Check glow plugs and injector nozzles, if hard starting, excess smoke, or rough running is noted.

[2] = Check with engine running and oil at operating temperature.

[3] = Immediately after every washing, regardless of the interval listed.

Notation for areas of concern: Inspection performed by:_____

Item	Date	Information
1		
2		
3		
4		
5		
6		
7		

(See Operator's and Service Manual for specifications and procedures)

REELMASTER® 223-D, 5100-D, and 5300-D Supervisor Maintenance Work Order Date:_____

(duplicate this page for routine use)

Unit Designation:	TORO I.D. #: _____-_____
Hours:	Service to perform (circle):
Technician:	**A B C D E Other**

Remarks:

A -Service (every 50 hours)

- ☐ Check Battery Fluid Level
- ☐ Check Battery Cable Connections
- ☐ Lubricate All Grease Fittings
- ☐ Change Engine Oil
- ☐ Inspect Air Filter, Dust Cup, and Baffle
- ☐ _____
- ☐ _____
- ☐ _____
- ☐ _____

B -Service (every 100 hours)

- ☐ Check Fan and Altenator Belt Tension
- ☐ Replace Engine Oil Filter
- ☐ Inspect Cooling System Hoses
- ☐ **A-Service** required
- ☐ _____
- ☐ _____
- ☐ _____
- ☐ _____
- ☐ _____

C -Service (every 200 hours)

- ☐ Drain Moisture-Hyd. Tank
- ☐ Drain Moisture-Fuel Tank
- ☐ Check Reel Bearing Preload
- ☐ Torque Wheel Lug Nuts
- ☐ **A** and **B Service** required
- ☐ _____
- ☐ _____
- ☐ _____
- ☐ _____

D -Service (every 400 hours)

- ☐ Service Air Filter
- ☐ Replace Electric Fuel Pump Filter
- ☐ Replace Fuel/WaterSeparator Filter
- ☐ Inspect Traction Linkage Movement
- ☐ Torque Head and Adjust Valves
- ☐ Check Engine RPM (idle and full throttle)
- ☐ **A**, **B**, and **C Service** required
- ☐ _____
- ☐ _____

E -Service (every 800 hours)

- ☐ Change Hydraulic Fluid
- ☐ Change Transmission Fluid
- ☐ Replace Transmission Filter
- ☐ Check Rear Wheel Toe-in
- ☐ Pack Rear Wheel Brgs/Change 4WD Oil
- ☐ **A**, **B**, **C**, and **D Service** required
- ☐ _____
- ☐ _____
- ☐ _____

Other - Annual Service and Specials

- ☐ Replace Moving Hoses
- ☐ Replace Safety Switches
- ☐ Coolant System - Flush/Replace Fluid
- ☐ Fuel Tank - Drain/Flush
- ☐ Hydraulic Tank - Drain/Flush
- ☐ _____
- ☐ _____
- ☐ _____
- ☐ _____

(See Operator's and Service Manual for specifications and procedures)

Chapter 3

Mitsubishi Diesel Engine

Table of Contents

INTRODUCTION 2
SPECIFICATIONS 3
General 4
Engine 5
Lubrication System 7
Fuel System 8
Governor System 8
Cooling System 8
Electrical System 9
Tightening Torque 10
SPECIAL TOOLS 11
ADJUSTMENTS 13
Valve Clearance 13
Engine Speed Adjustments 14
Throttle Linkage Adjustment 15
TROUBLESHOOTING 15
TESTING 18
Glow Plug Test 18
Compression Test 19
Nozzle Tests 20
Injection Pump Test 22
Injection Timing Test 23
Fuel Pump Test 24
Thermostat Test 24
PREPARATION FOR ENGINE REPAIR 25
Cylinder and Cylinder Block Overhaul 25
EXTERNAL ENGINE COMPONENT REPAIR 26
Cooling Fan Belt and
Alternator Belt Replacement 26
Alternator Removal and Installation 27
Starter Removal and Installation 27
Replacing and/or Adjusting Stop Solenoid 28
Glow Plug Replacement 29
Oil Pressure Switch Replacement 29
Thermostat Removal and Installation 29
Water Pump Service 30
GOVERNOR SYSTEM REPAIRS 31
Governor Operation 31
Governor Inspection 32
Governor Service 33
Installation of Torque Spring Set 34
Assembly of Torque Spring Set 35
FUEL SYSTEM REPAIRS 36
Bleeding the Fuel System 36
Bleeding Air From the Injectors 37
Fuel Pump Service 37
Injection Pump Service 38
Nozzle Service 41
Removing and Installing the Fuel Tank 43
REMOVING AND INSTALLING THE ENGINE 44
Removing the Engine 44
Installing the Engine 45
CYLINDER HEAD OVERHAUL 46
Cylinder Head Removal 46
Cylinder Head Service 47
Valve Guides 48
Valves 49
Valve Seats 49
Valve Springs 50
Rocker Arm and Rocker Shaft 50
Cylinder Head Reassembly and Installation . . . 51
CYLINDER BLOCK OVERHAUL 53
Gear Case and Oil Pump 53
Timing Gears and Camshafts 56
Piston and Connecting Rod 59
Crankshaft 63
Cylinder Block 66

Introduction

Most repairs and adjustments require tools which are commonly available in many service shops. Special tools are described in the Special Tools section. The use of some specialized test equipment is explained, however, the cost of the test equipment and the specialized nature of some repairs may dictate that the work be done at a qualified diesel engine repair facility.

The engine is manufactured by Mitsubishi Heavy Industries Limited. Service and repair parts for Mitsubishi engines are supplied through TORO Distributors. Repair parts may be ordered by TORO Part Number. If no parts list is available be sure to provide your dealer or distributor with the TORO Model Number and Serial Number.

The engine model number is cast onto the injection pump side of the cylinder block (Fig. 1a). The serial number is stamped on the injection pump mounting surface of the crankcase (Fig. 1b). There is also a model and serial number decal on the valve cover.

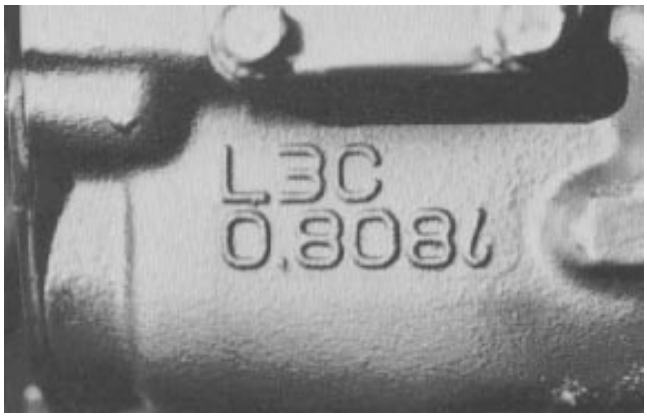

Figure 1a

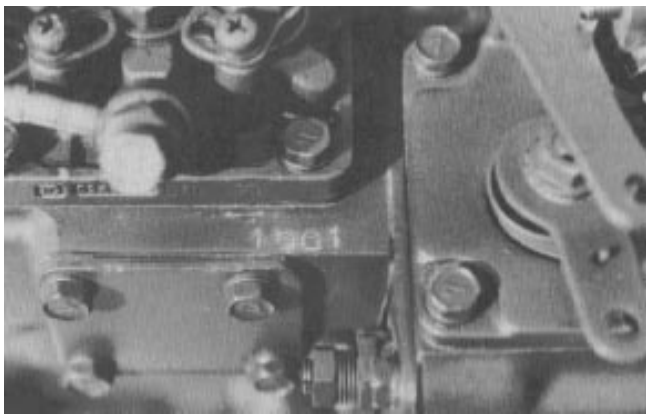

Figure 1b

Specifications

The illustrations (Figs. 2a and 2b) will give information about the general construction of the engine.

Refer to the specifications listed in this section when performing tests on the engine or examining parts for wear. Some specifications are included in the service procedures later in this chapter.

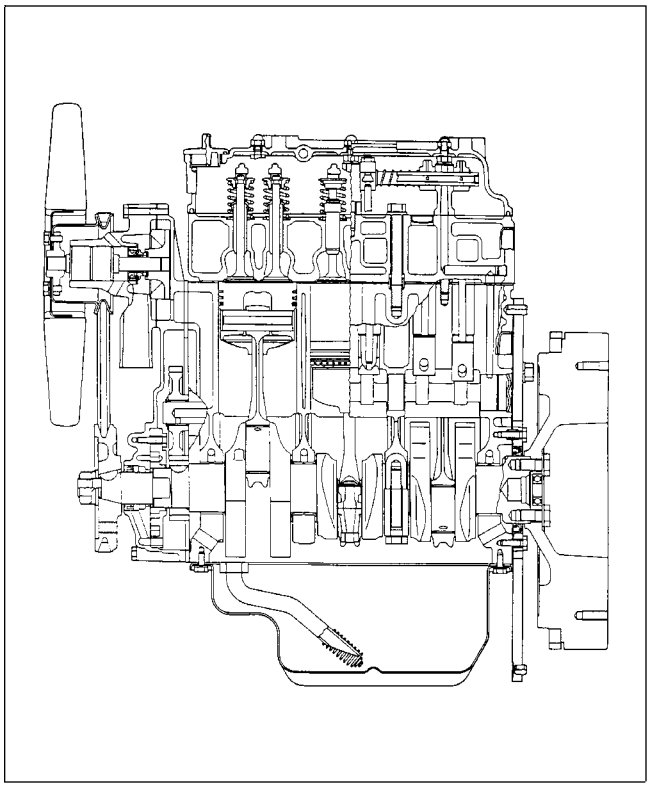

Figure 2a

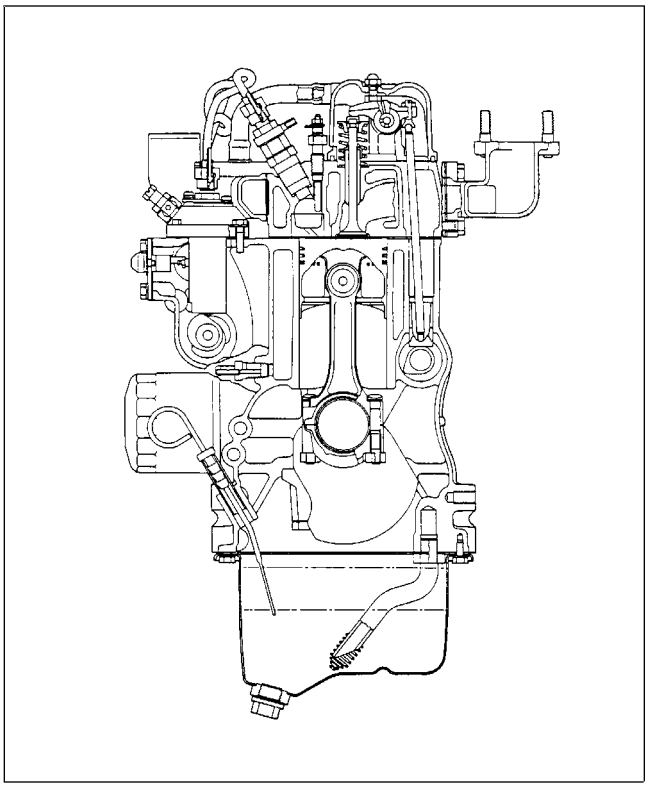

Figure 2b

General

Item	Specification
Make/Designation	Mitsubishi L3E-61TG, overhead valve, vertical in-line, 4 cycle diesel
Combustion Chamber	Swirl chamber type
Number of Cylinders	3
Bore x Stroke	76 x 70 mm (2.99 x 2.76 in.)
Total Displacement	952 cc (58 $in.^3$)
Compression Ratio	23:1
Firing Order	1 - 3 - 2
Dry Weight (approximate)	75 kg (165 lb.)
Fuel	Diesel
Fuel Injection Pump	Bosch type NC
Governor	Centrifugal weight type
Fuel Injector Nozzle	Throttle type
Fuel Injection Pressure	(140 kg/cm^2) 1990 psi
Lubrication System	Forced lubrication
Oil Pump	Gear type
Oil Filter	Paper element filter (full flow type)
Crankcase Oil Capacity: including filter of 0.5 liter (0.6 qt.) capacity - FULL / LOW	3.6 / 1.8 liter (3.8 / 1.9 qt.)
Cooling System	Forced circulation, water cooling
Water Pump	Centrifugal type
Cooling System Capacity Engine Only Total System (approximate)	 1.8 liter (1.9 qt.) 6.1 liter (6.4 qt.) with expansion tank
Starter	Solenoid shift type 1.6 kW (12 volt)
Alternator	AC type 12 volt 40A
Glow Plug	Sheathed type

Engine

Item	Standard Specification	Repair Limit	Service Limit
Governor	Mechanical/Centrifugal		
Operating Speed (no load)	3200 rpm		$^{+50}_{-0}$ rpm
Idle Speed (no load)	1700 rpm		$^{+50}_{-0}$ rpm
Compression	28 kg/cm^2 (398 psi) at 280 rpm	25 kg/cm^2 (356 psi)	22 kg/cm^2 (93 psi)
Pressure Difference Between Cylinders	2.5 kg/cm^2 (36 psi) max.		
Cylinder Injection Order	1 - 3 - 2		
Injection Timing	19° B.T.D.C. (at smoke set position) ± 1.5^o	19° ± 2°	
Cylinder Head			
Bottom Surface Flatness (distortion)	Within 0.05 mm (0.002 in.)	0.1 mm (0.004 in.)	
Valve Guide I.D.	6.6 mm (0.26 in.)		
Valve Seat Angle	45°		
Valve Seat Width	1.3 - 1.8 mm (0.051 - 0.071 in.)	2.5 mm (0.1 .in.)	
Valve Seat Sinkage			–1 mm (– 0.039 in.)
Valve Clearance (cold) (both intake and exhaust)	0.25 mm (0.01 in.)		
Valves			
Valve Head Dia. (IN)	26.7 mm (1.051 in.)		
Valve Head Dia. (EX)	24.7 mm (0.972 in.)		
Overall Length	94 mm (3.701 in.)		
Valve Stem O.D.	6.6 mm (0.260 in.)		
Stem to Guide Clearance (IN)			0.10 mm (0.004 in.)
Stem to Guide Clearance (EX)			0.15 mm (0.006 in.)
Valve Seat Face Angle	45°		
Valve Head Thickness (margin width)	1 mm (0.039 in.)		0.5 mm (0.020 in.)
Valve Head Sinkage (from cyl. head bottom face)	0.5 mm (0.020 in.)		1.5 mm (0.06 in.)
Valve Spring			
Free Length	40.5 mm (1.595 in.)	39.3 mm (1.547 in.)	
Installed Load/Height (IN)	5.94 kg/35.5 mm (13.1 lb./1.4 in.)		–15%
Installed Load/Height (EX)	14.84 kg/28 mm (32.7 lb./1.1 in.)		–15%
Squareness	3°		3°
Rocker Arm I.D.	12 mm (0.472 in.)		
Rocker Arm to Shaft Clearance			0.2 mm (0.008 in.)
Cylinder Block			
Cylinder Bore	76 mm (2.9921 in.)	+0.2 mm (0.0079 in.)	+0.45 mm (0.0177in.)
Tolerance on Oversize Cylinder Bore	Each Oversize 0 to 0.03 mm (0.001 in.)		
Taper	Within 0.01 mm (0.0004 in.)		
Gasket Fitting Surface Distortion	Within 0.05 mm (0.002 in.)	0.1mm (0.004 in.)	
Camshaft Hole Diameter			
Front	42 mm (1.654 in.) (ball bearing hole)		
No. 2	33 mm (1.299 in.)		
No. 3	33 mm (1.299 in.)		
Rear	33 mm (1.299 in.)		

Engine (cont.)

Item	Standard Specification	Repair Limit	Service Limit
Piston			
Type	Solid		
Material	Aluminum alloy		
Piston Outside Diameter (skirt end)	76 mm (2.99 in.)		
Piston to Cylinder Wall Clearance			0.3 mm (0.012 in.)
Oversize	0.25, 0.50 mm (0.01, 0.02 in.)		
Protrusion from cylinder block top surface	0.9 mm (0.035 in.)		
Piston Pin			
Type	Semi-floating		
Outside Diameter	18 mm (0.709 in.)		
Pin to Piston Clearance			0.08 mm (0.003 in.)
Pin to Connecting Rod Clearance	Press-fit load: 1000 ± 500 kg (2200 ± 1100 lb.)		
Piston Rings			
Number of Rings			
2 Compression	No. 1: Chrome plated, semi-keystone type No. 2: Tapered		
1 Oil	Chrome plated ring with coil expander		
Compression Ring Width	2 mm (0.079 in.)		
Oil Ring Width	3 mm (0.118 in.)		
Compression Ring Side Clearance (No. 2)	0.05 - 0.09 mm (0.002 - 0.004 in.)		0.2 mm (0.008 in.)
Oil Ring Side Clearance	0.03 - 0.07 mm (0.001 - 0.003 in.)		0.2 mm (0.008 in.)
Ring Gap	0.15 - 0.40 mm (0.006 - 0.016 in.)		1.5 mm (.060 in.)
Connecting Rod			
Type	Forged I-beam		
Bend and Twist	Within 0.05 mm (0.002 in.)		0.15 mm (0.006 in.) max.
Big End Thrust Clearance	0.1 - 0.35 mm (0.004 - 0.014 in.)		0.5 mm (0.02 in.)
Connecting Rod Bearings			
Oil Clearance			0.15 mm (0.006 in.)
Undersize	0.25, 0.50 mm (0.01, 0.02 in.)		
Crankshaft			
Type	Fully counterbalanced		
Bend	Within 0.03 mm (0.001 in.)		0.05 mm (0.002 in.)
End Play	0.05 - 0.175 mm (0.002 - 0.007 in.)		
Journal O.D.	43 mm (1.693 in.)	– 0.15 mm (– 0.006 in.)	– 0.70 mm (– 0.028 .in)
Pin O.D.	40 mm (1.575 in.)	– 0.15 mm (– 0.006 in.)	– 0.70 mm (– 0.028 .in)
Finish Undersize			
Journal U.S. 0.25 mm (0.01 in.)	42.715 - 42.730 mm (1.6817 - 1.6823 in.)		
Journal U.S. 0.50 mm (0.02 in.)	42.465 - 42.480 mm (1.6719 - 1.6724 in.)		
Pin U.S. 0.25 mm (0.01 in.)	39.715 - 39.730 mm (1.5636 - 1.5642 in.)		
Pin U.S. 0.50 mm (0.02 in.)	39.465 - 39.480 mm (1.5537 - 1.5543 in.)		
Main Bearings			
Oil Clearance			0.10 mm (0.004 in.)
Undersize	0.25, 0.50 mm (0.01, 0.02 in.)		

Engine (cont.)

Item	Standard Specification	Repair Limit	Service Limit
Camshafts			
Drive System	Gear		
Front Journal	Ball bearing		
Journal to Cylinder Block Hole Clearance			0.15 mm (0.006 in.)
Cam Lobe Major Diameter (both intake and exhaust)	27.37 mm (1.078 in.)		– 1.0 mm (– 0.0433 in.)
Cam Lobe Major Diameter (pump cam)	30 mm (1.224 in.)		– 0.7 mm (– 0.028 in.)
Tappets			
Outside Diameter	19 mm (0.748 in.)		
Tappet to Cylinder Block Hole Clearance			0.15 mm (0.006 in.)
Push Rod Bend	Within 0.3 mm (0.012 in.)		

Lubrication System

Item	Standard Specification	Repair Limit	Service Limit
Oil Capacity	3.6 liter (3.8 qt.) including oil filter		
API Service Class	CD		
Viscosity			
Above $68^{o}F$ ($20^{o}C$)	SAE 30 or 10W-30		
$41^{o}F$ to $68^{o}F$ (5° to $20^{o}C$)	SAE 20 or 10W-30		
Below $41^{o}F$ ($5^{o}C$)	SAE 10W-30		
Oil Pump			
Type	Gear type		
Check Valve Opening Pressure	3 ± 0.3 kg/cm^2 (42.66 ± 4.27 lb/in^2) at 1000 rpm		
Outer Rotor to Housing Clearance	0.100 - 0.196 mm (0.004 - 0.008 in.)	0.3 mm (0.012 in.)	
Outer Rotor Thrust Clearance	0.04 - 0.10 mm (0.002 - 0.004 in.)	0.25 mm (0.01 in.)	
Oil Pressure Switch			
Indicator Lamp Lighting Pressure	7.1 lbs/in^2 (0.5 kg/cm^2)		

Fuel System

Item	Standard Specification	Repair Limit	Service Limit
Fuel Pump Delivery Rate	225 cc (13.73 in^3) or more (15 sec., 12V)		
Fuel Injection Pump Model Injection Timing (B.T.D.C.)	 ND-PFR-NC $19^o \pm 1.52^o$ (at SS)	 $19^o \pm 2^o$	
Nozzles Type Injection Start Pressure	 Throttle type 140 kg/cm^2 (1992 psi)	 140 ± 10 kg/cm^2 (1992 ± 142 psi)	

Governor System

Item	Standard Specification	Repair Limit	Service Limit
Type	Centrifugal weight type		

Cooling System

Item	Standard Specification	Repair Limit	Service Limit
Coolant Capacity Engine Only Total System (approximate)	 1.8 liter (1.9 qt.) 6.1 liter (6.4 qt.) with expansion tank		
Thermostat Type Valve Cracking Temperature Full Opening Valve Temperature Valve Lift	 Wax type 76.5° C + 1.5° C (170° F + 35° F $90^o \pm 1.5^o$C ($194^o \pm 3^o$F) 8 mm (0.314 in.)		

Electrical System

Item	Standard Specification	Repair Limit	Service Limit
Starter			
Type	Solenoid shift type		
Nominal Output	1.6 kW - 12V		
Direction of Rotation	Clockwise as viewed from pinion side		
No-load Characteristics (Cold)			
Terminal Voltage	11.5V		
Current	100A or less		
Speed	3000 rpm or more		
Load Characteristics			
Terminal Voltage	7.7 V		11.5V
Current (torque)	300A (0.98 kg/m (6.7 ft-lb) or more)		0.7 kg/m (5 ft-lb)
Speed	980 rpm or more		
Height of Brush	17 mm (0.67 in.)		6 mm (0.24 in.)
Spring Pressure	3 kg (6.6 lb.)		
Commutator O.D.	38.7 mm (1.52 in.)		– 1.0 mm (– 0.4 in.)
Depth of Commutator Undercut	0.5 mm (0.02 in.)		0.2 mm (0.008 in.)
Pinion Gap	0.5 - 2.0 mm (0.02 - 0.08 in.)		
Thrust Gap	0.5 (0.02 in.) or less		
Alternator			
Nominal Output	12V - 40A		
Direction of Rotation	Clockwise as viewed from pulley side		
Output Characteristics - Hot			
Terminal Voltage	13.5V		
Current / Speed	21A / 2500 rpm 37A/5000 rpm		
Regulated Voltage	14.7 ± 0.3V		
Glow Plugs			
Rated Voltage	10.5V DC		
Rated Current (when rated voltage is applied for 30 seconds)	9.7A ± 1.0A		
Resistance	0.16 ohm (at room temperature)		
Glow Plug Indicator			
Rated Current	29A		
Voltage Across Terminals (at 29A)	1.7V ± 0.2V		

Tightening Torque

The Mitsubishi diesel engine has many bolts and capscrews of special materials and sizes. It is very important that special care be used to replace all bolts and capscrews in their proper location during assembly of the engine. The torque specifications in American Standard and Metric as listed below MUST be followed in order to have the assembled engine conform to the original specifications.

Item	Size (Width across flat of hex head)	Specification
Cylinder Head Bolt,Main (Wet) Cylinder Head Bolt, Sub. (Wet)	M10 (14) M8 (12)	7.5 - 8.5 KgM (54 - 62 ft-lb) 2.0 - 3.0 Kgm (15 - 22 ft-lb)
Connecting Rod Cap Nut	M8 (14)	3.2 - 3.5 KgM (23 - 25 ft-lb)
Flywheel Bolt	M10 (17)	8.5 - 9.5 KgM (62 - 69 ft-lb)
Crankshaft Pulley Nut	M16 (24)	10.0 - 12.0 KgM (72 - 87 ft-lb)
Main Bearing Cap Bolt	M10 (17)	5.0 - 5.5 KgM (36 - 40 ft-lb)
Rocker Stay Bolt	M8 (12)	1.5 - 2.2 KgM (11 - 16 ft-lb)
Rocker Cover Nut	M6 (10)	0.5 - 0.7 KgM (4 - 5 ft-lb)
Nozzle Holder (fitting to engine)	M20 (21)	5.0 - 6.0 KgM (36 - 43 ft-lb)
Nozzle Union Collar Fixing Nut	M12 (17)	2.5 - 3.0 KgM (18 - 22 ft-lb)
Nozzle Retaining Nut	M16 (21)	3.5 - 4.0 KgM (25 - 29 ft-lb)
Fuel Injection Pipe Nut	M12 (17)	2.5 - 3.5 KgM (18 - 25 ft-lb)
Delivery Valve Holder	M16 (17)	3.5 - 3.9 KgM (25 - 28 ft-lb)
Injection Pump Hollow Screw	M10 (14)	1.0 - 1.5 KgM (7 - 11 ft-lb)
Injection Pump Air Vent Screw	M6 (10)	0.5 - 0.7 KgM (4 - 5 ft-lb)
Solenoid Locknut	M30 (36)	4.0 - 5.0 KgM (29 - 36 ft-lb)
Water Temperature Gauge Joint	M16 (23)	2.0 - 3.0 KgM (15 - 22 ft-lb)
Thermoswitch	M16 (19)	1.9 - 2.7 KgM (14 - 20 ft-lb)
Thermo Gauge Unit	M16 (17)	1.9 - 2.7 KgM (14 - 20 ft-lb)
Oil Filter	M20	1.1 - 1.3 KgM (8 - 9 ft-lb)
Oil Relief Plug	M18 (22)	4.0 - 5.0 KgM (29 - 36 ft-lb)
Oil Drain Plug	M18 (19)	5.0 - 6.0 KgM (36 - 43 ft-lb)
Glow Plug	M10 (12)	1.5 - 2.0 KgM (11 - 14 ft-lb)
Glow Plug Lead Wire Fitting Nut	M4 (7)	10 - 15 KgCM (9 - 13 in-lb)

Special Tools

Order special tools from *TORO SPECIAL TOOLS AND APPLICATIONS GUIDE (Commercial Products)*. Some tools may be available from a local supplier.

Filter Cleaner

Filter cleaner (Fig. 3). Mix with water and use solution to wash the Donaldson air cleaner element.

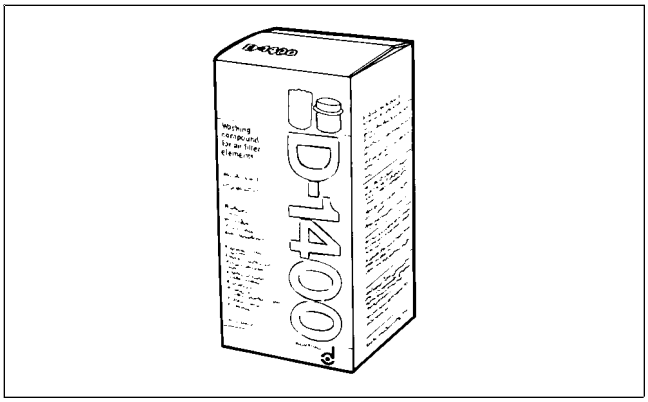

Figure 3

Diesel Engine Compression Test Kit

Diesel engine compression test kit (Fig. 5). 0-1000 PSI Gauge allows testing of diesel engines to check general operating condition of engine. Includes case, guage with hose, glow plug hole adapters and instructions.

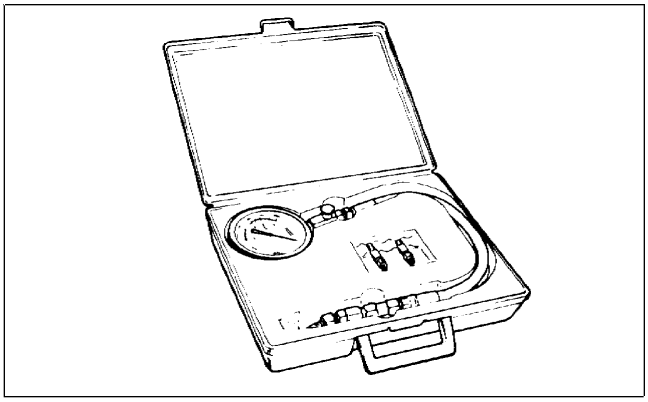

Figure 5

Piston Pin Tool

Piston pin tool (Fig. 6) is used to remove and install the wrist pin without distorting the piston. Inludes an adapter for use with Mitsubishi and most other engines.

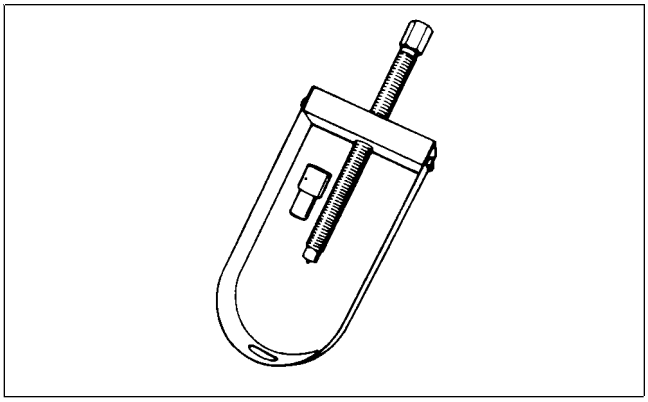

Figure 6

Nozzle Tester

Nozzle tester (Fig. 7). Tests condition and opening pressure of fuel injector nozzles.

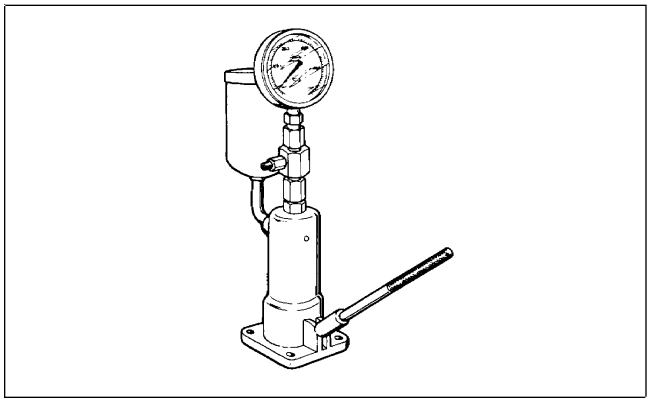

Figure 7

Nozzle Tester Adapter

Nozzle tester adapter (Fig.8) is required to test the fuel injection nozzles.

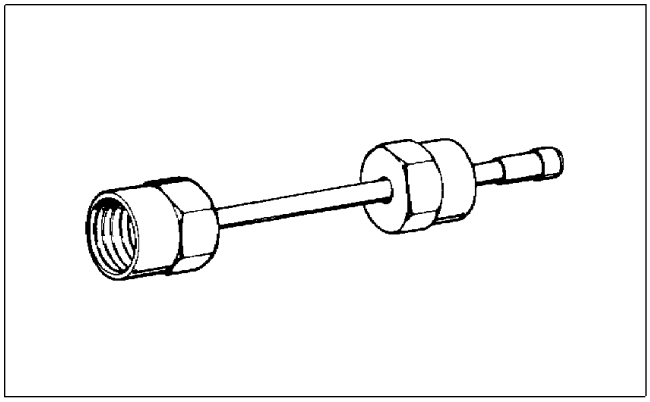

Figure 8

Adjustments

Valve Clearance

Check the valve clearance after the first 50 hours of operation and every 400 hours of operation after that.

1. The engine must be cold when the valve clearance is checked.

2. Remove the air breather hose from the rocker cover.

3. Remove the rocker cover nuts and washers. Remove the rocker cover.

4. Tighten the cylinder head bolts to the proper torque. The rocker assembly must be removed before tightening the cylinder head bolts. When tightening the cylinder head bolts, lower the coolant level in the engine, loosen the bolts slightly and then re-tighten in the sequence shown (Fig. 9).

M10 head bolt torque: 7.5 - 8.5 KgM (54 - 62 ft-lb)
M8 head bolt torque: 2.0 - 3.0 KgM (15 - 22 ft-lb)
Rocker stay bolt torque: 1.5 - 2.2 KgM (11 - 16 ft-lb)

5. Rotate the crankshaft until the TDC mark (located next to the injection timing mark(s) on the pulley lines up with the registration mark on the gear case (Fig. 10). This will be TDC on cylinder No. 1.

NOTE: There are two TDC positions (compression and intake strokes). At compression TDC the rocker arms will not move when the crankshaft pulley is rotated a small distance each way. Compression TDC is where the valves are to be adjusted.

6. Measure the valve clearance by using a thickness gauge inserted between the valve stem and rocker arm. The correct valve clearance for both the intake and exhaust valves is 0.25 mm (0.01 in.).

7. To adjust the valve clearance, loosen the adjusting lock nut and turn the rocker arm adjusting screw clockwise or counterclockwise until you get the correct clearance (Fig. 11). Tighten the locknut securely. Check to make sure that the clearance was not changed while tightening the locknut.

8. Perform steps 6 and 7 of this procedure for cylinder No. 2 and 3 while at their TDC position. Turn the crankshaft 240° clockwise to get No. 3 cylinder TDC. Turn the crankshaft an additional 240° clockwise to get No. 2 cylinder TDC.

9. Install the rocker cover. Install the rocker cover nuts and washers. Install the air breather hose on the rocker cover.

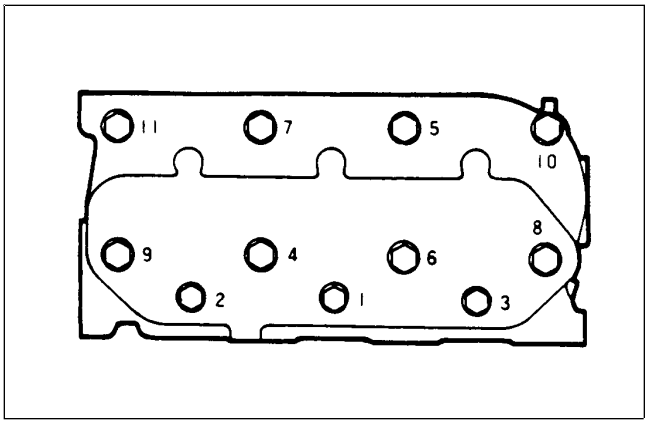

Figure 9

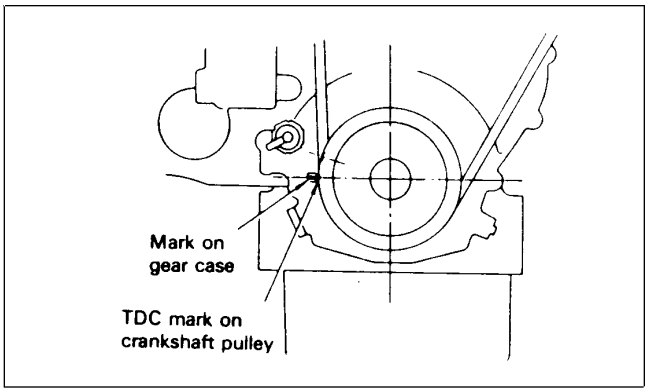

Figure 10

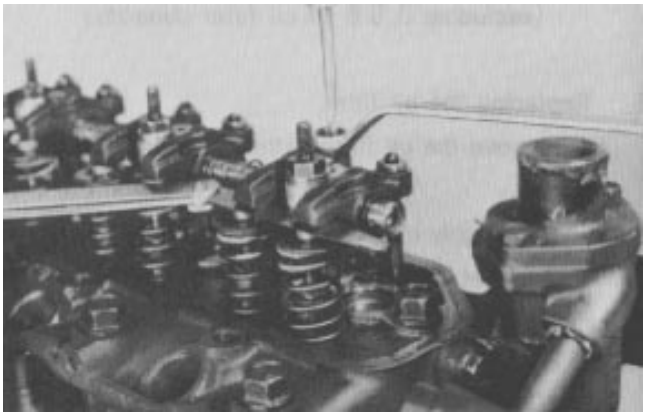

Figure 11

Engine Speed Adjustments

Adjustments to the engine speed settings are not normally necessary unless the throttle linkage, injection pump, or governor mechanism have been repaired, rebuilt, replaced or are not operating correctly.

Since there is no ignition system from which to power an electronic tachometer, a vibration-type tachometer must be used to set engine speed.

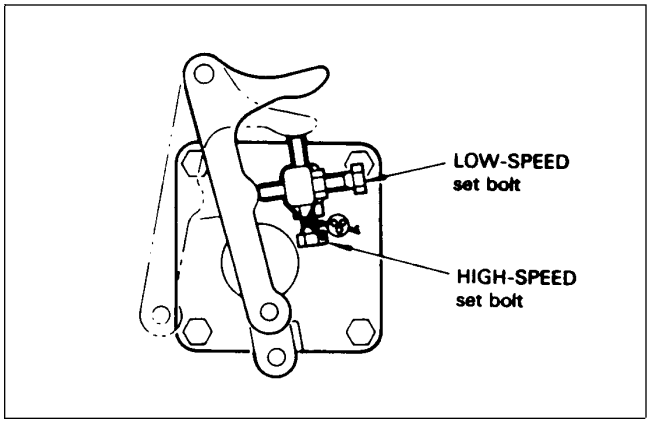

Figure 12

High Speed Adjustment

NOTE: Specified rpm is with no load on engine.

The high speed set bolt has been set properly and sealed at the factory. Never tamper with the seal unless necessary.

1. The engine should be at operating temperature. Make sure the parking brake is engaged.

2. Open the hood.

3. Loosen the lock nut on the high speed set bolt (Fig. 12).

4. Adjust maximum engine speed to 3200 $^{+50}_{-0}$ rpm by rotating the high speed set bolt. Tighten the lock nut.

5. Install a wire and lead seal on the high speed set bolt.

Idle Speed Adjustment

NOTE: Specified engine rpm is with no load on engine.

1. The engine should be at operating temperature. Make sure the parking brake is engaged.

2. Move the throttle control lever to the idle position (against the stop plate). Open the hood.

3. Loosen the lock nut on the low speed set bolt (Fig. 12).

4. Adjust idle speed to 1700 $^{+50}_{-0}$ rpm by rotating the low speed set bolt. Tighten the lock nut.

Throttle Linkage Adjustment

1. Loosen the capscrew and nut securing the throttle cable to the governor lever (Fig. 14)

2. Push the governor lever all the way back so it is contacting the high speed set screw.

3. Move the throttle lever (Fig. 13) to the maximum speed position (all the way forward).

4. Tighten the cap screw and nut securing the throttle cable to the governor lever.

5. Make sure the throttle cable conduit does not interfere with the full range of motion of the throttle lever or governor lever.

6. Tighten locknut on throttle lever pivot so 10 - 15 lb. of force is required to move the throttle lever.

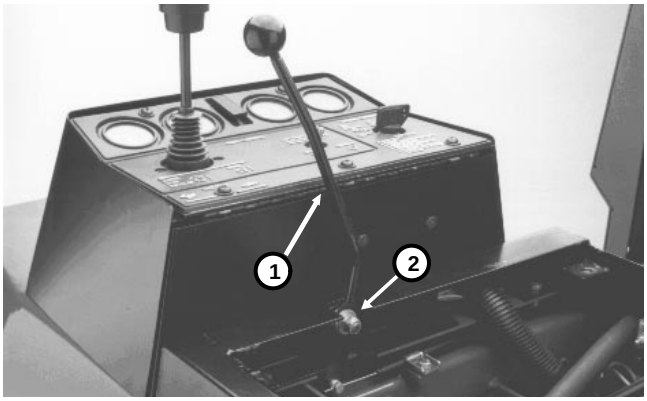

Figure 13

1. Throttle lever 2. Locknut

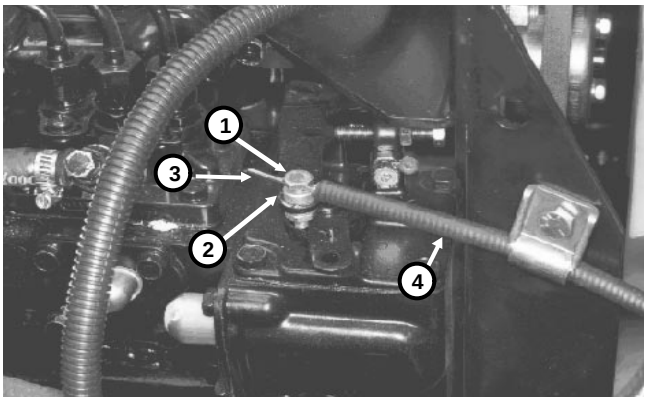

Figure 14

1. Governor lever
2. Cap screw and nut
3. Throttle cable
4. Throttle cable conduit

Troubleshooting

Giving Immediate attention to any indication of a problem can prevent major failures, and increase the life of the engine.

Never make more that one adjustment at a time, then locate the trouble by a process of elimination. Remember the cause is usually SIMPLE, rather than mysterious and complicated.

(1) Engine Fails to Start

Problem/Probable Cause	Possible Remedy
● Slow Cranking Speed	
1. Engine oil viscosity is too high.	Use correct oil.
2. Battery is discharged.	Charge the battery.
3. Battery plates sulfated.	Replace the battery.
4. Battery terminal dirty or poor connection.	Clean the terminals/repair or tighten cables.
5. Starter failure.	Repair or replace starter.

(1) Engine Fails to Start (continued)

Problem/Probable Cause	Possible Remedy
● Injection system	
1. Air in fuel line.	Purge air from the fuel system.
2. Fuel filter is clogged.	Clean/replace filters.
3. Injection pressure is low.	Adjust injection pressure of nozzle.
4. Poor nozzle spray.	Clean or replace the nozzle.
5. Poor injection pump pressure.	Repair or replace injection pump.
6. Incorrect fuel.	Use recommended fuel.
7. Injection timing is advanced.	Adjust injection timing.
● Low Compression	
1. Valve clearance is incorrect.	Adjust valve clearance.
2. Valve seat surface is rough, or burnt.	Finish surface by lapping. Replace valve and guide.
3. Valve spring is broken.	Replace the spring.
4. Leaking cylinder head gasket.	Replace the gasket.
5. Piston rings are seized.	Overhaul the engine.
6. Piston rings and cylinder are worn.	Overhaul the engine.
● Glow plug is burnt out.	Replace the glow plug.
● Glow plug does not glow red hot.	Poor wiring connection.
● Governor lever position incorrect.	Adjust governor lever.
● Governor spring broken or disconnected.	Repair governor spring.

(2) Low Power

Problem/Probable Cause	Possible Remedy
● Low Compression	Refer to "starting failure, low compression."
● Injection system faulty	
1. Injection timing is incorrect.	Adjust the injection timing.
2. Injection volume is insufficient.	Repair or replace pump.
3. Injection pressure is low.	Inspect the injection nozzle, adjust pressure.
● Lack of fuel	
1. Air in fuel system.	Inspect fuel line connections.
2. Filter is clogged.	Clean/replace filters.
3. Fuel tank is contaminated.	Clean the fuel tank.
● Air cleaner is clogged	Clean the air cleaner; replace the element if unserviceable.
● Engine overheats	
1. Low or incorrect coolant level.	Check coolant.
2. Improper belt tension.	Adjust belt tension.
3. Defective water pump.	Replace water pump.
4. Radiator clogged, or leaks pressure.	Clean/repair the radiator, inspect hoses and cap.
5. Injection timing is incorrect.	Adjust the injecting timing.
6. Engine oil is low.	Add engine oil.
7. Defective thermostat.	Replace thermostat.
● Carbon build-up in muffler.	Decarbon muffler.

(3) Excessive Oil Consumption

Problem/Probable Cause	Possible Remedy
● Oil leaks	
1. Oil seals worn.	Check for wear, and replace if worn.
2. Gaskets leaking.	Replace the gasket.
3. Loose fasteners.	Retighten fasteners.
4. Drain plug is loose.	Tighten the plug.
5. Pipe plugs at oil pump loose.	Tighten the plugs.
● Burning Oil	
1. Ring end gaps positioned wrong.	Stagger end gaps properly.
2. Connecting rod bent or twisted.	Overhaul engine.
3. Piston rings worn.	Replace the rings. Overhaul engine.
4. Piston and cylinder are worn.	Overhaul engine.
5. Faulty valve stem seal.	Replace valve stem seal.
6. Valves or valve guides worn.	Replace the valves or valve guides.

(4) Abnormal Engine Noises

Problem/Probable Cause	Possible Remedy
● Crankshaft and main bearing	
1. Worn crankshaft.	Repair or replace crankshaft; inspect bearings.
2. Worn or damaged bearings.	Replace bearings; inspect crankshaft.
● Connecting rod and bearings	
1. Connecting rod bearing worn.	Replace bearing; inspect crankshaft.
2. Worn crankpin.	Repair or replace crankshaft; inspect bearing.
3. Twisted connecting rod.	Replace connecting rod.
● Piston, piston pin, and piston rings	
1. Cylinder is worn.	Overhaul engine.
2. Piston pin is worn.	Replace piston and pin, inspect cylinder, rod, and rings.
● Rocker arm mechanism and relative parts	
1. Camshaft is worn.	Replace camshaft.
2. Excessive valve clearance.	Adjust the valve clearance.
3. Worn timing gear.	Replace the timing gear; inspect mating gears.
4. Worn fan shaft bearings.	Replace the bearing/shaft.

(5) Engine Runs Rough

Problem/Probable Cause	Possible Remedy
● Injection pump mechanism	
1. Irregular injection pump volume.	Repair or replace injection pump.
2. Faulty control rack function.	Repair or replace injection pump.
3. Worn delivery valve.	Replace the delivery valve.
4. Faulty injection nozzle.	Repair or replace nozzle.
● Governor mechanism	
1. Governor lever sticking.	Inspect/repair governor.
2. Stretched or weak governor spring.	Replace the spring.

Glow Plug Test

CAUTION

Be careful while handling or testing glow plugs. Glow plugs become extremely hot. Accidental contact with the heated plug tip could cause personal injury.

1. Disconnect the wire lead(s) to the glow plug.

2. Remove the glow plug.

3. Inspect the glow plug for signs of a burnt glow plug end tube.

NOTE: If the metal of the glow plug end is melted, it is a sign of cylinder overheating. (See Engine Overheats in the Troubleshooting section of this chapter.)

4. Connect the positive (+) battery terminal to the glow plug terminal, and the negative (–) battery terminal to the plug body (Fig. 15). If the glow plug glows red-hot, the glow plug is operating correctly.

5. Replace any glow plugs that do not operate correctly.

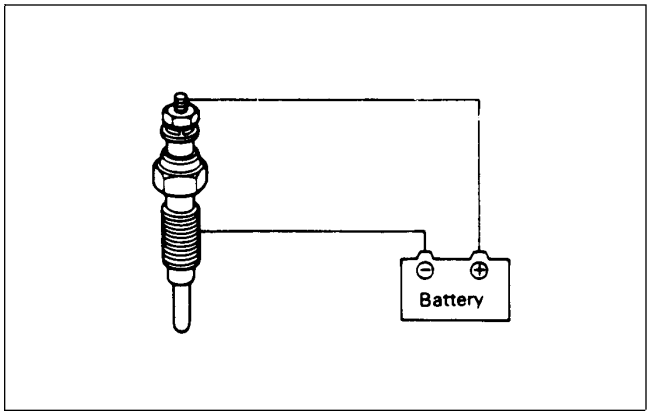

Figure 15

Compression Test

Normal cylinder compression is 28 kg/cm^2 (398 psi) at 280 rpm (normal cranking speed). The engine should be warm - coolant temperature of 50° C (120° F).

IMPORTANT: DO NOT put oil into the combustion chamber before performing a compression test. Damage may result because of "hydraulic" forces acting upon the piston and connecting rod.

1. Remove the glow plug lead wires and glow plugs from all three cylinders.

2. Insert the compression gauge adapter into the glow plug hole. (See the Special Tools section of this chapter.)

3. Connect the high pressure compression gauge to the adapter (Fig. 16).

4. Disconnect the fuel stop solenoid electrical connector to prevent fuel delivery during the compression test (Fig. 17). This will prevent wash-down of the cylinders and inaccurate readings.

5. Crank the engine with the starter motor until you get a stable gauge reading.

6. Normal compression is 28 - 32 kg/cm^2 (398 - 455 psi). If the pressure is less than 25 kg/cm^2 (356 psi) it will be necessary to find the cause of low compression. (See Engine Fails to Start - Low Compression in the Troubleshooting section of this chapter.)

7. Repeat the test for the other two cylinders. Difference between cylinders should be no more than 2.5 kg/cm^2 (36 psi).

8. Connect the fuel stop solenoid electrical connector.

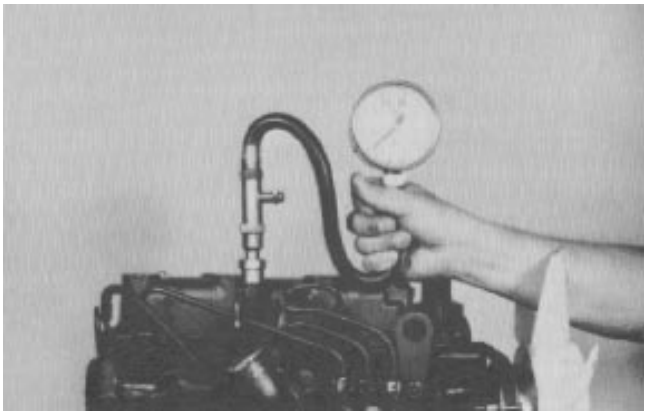

Figure 16

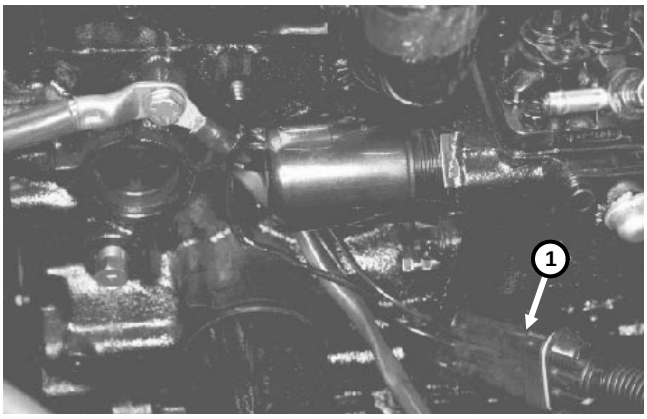

Figure 17

1. Fuel stop (ETR) solenoid electrical connector

Nozzle Tests

There are several tests to examine the condition of the injection nozzles. These tests require the use of a nozzle tester and nozzle tester adapter. (See the Special Tools section of this chapter.)

DANGER

The nozzle tester forces fuel from the nozzle under extremely high pressure. Always point the nozzle tip away from yourself and any other personnel. Contact with the fuel stream, even though it appears to be a mist can cause fuel to penetrate clothing and skin. If fuel is injected into the skin get proper medical attention from a doctor immediately. A serious infection or other reaction can develop if the injury is not properly treated. Tighten all adapter fittings to prevent leaks. If a leak is suspected, use a piece of cardboard, not your hands to search for a leak.

CAUTION

To prevent possible injury, wear eye protection when operating the nozzle tester.

IMPORTANT: Always use fresh filtered fuel in the nozzle tester. Use of dirty fuel can damage the precision parts of the injector nozzle. It is a good practice to:

1. Bolt the tester securely to the test bench.

2. Use a drain pan to catch fuel.

3. Flush the adapter by pumping the handle of the tester slowly several times before attaching the nozzle to be tested.

Injection Pressure Test

The diesel engine requires that fuel be sprayed into the combustion chamber at a precise point in the compression stroke. The point at which this fuel injection occurs is determined by the injection timing. If the nozzle is defective, damaged or adjusted incorrectly, starting failures, low power output, or engine knocking can occur.

1. Securely fasten the nozzle to the adapter.

2. Pump the handle several times to purge air from the nozzle mechanism.

3. Allow pressure to dissipate before performing the test.

4. Operate the pump handle slowly and observe the gauge to determine the pressure at which the nozzle opens and the fuel is sprayed.

5. Verify that starting pressure is within the following limits: Minimum starting pressure is 130 kg/cm^2 (1850 psi); Maximum starting pressure is 150 kg/cm^2 (2134 psi).

6. Starting pressure can be adjusted by adding or removing shims from the nozzle. (See Nozzle Service in the Fuel System Repairs section of this chapter.) A 0.1 mm shim will cause a 10 kg/cm^2 (140 psi) starting pressure difference. Shims are available from 1.25 mm to 1.7 mm thick in 0.5 mm increments.

7. Repeat the test after installing shim to verify that a correct starting pressure has been obtained.

Chattering Test

Proper and free operation of the nozzle valve can be determined by the chattering test.

1. Securely fasten the nozzle to be tested to the adapter.

2. Operate the pump handle slowly (ten strokes per minute). As the pump pressure reaches the starting pressure the nozzle valve will chatter as it opens and closes rapidly. A nozzle which does not chatter may be the result of a binding or bent nozzle valve.

Nozzle Leakage Test

A nozzle that leaks fuel from the nozzle orifice must be replaced.

1. Securely fasten the nozzle to the adapter.

2. Wipe all fuel from the nozzle.

3. Operate the pump until the pressure is approximately 108 kg/cm^2 (1500 psi). Maintain this pressure to the nozzle.

4. Watch for leaks where the threaded nozzle body threads into the retaining nut. Leaks in this area would indicate a bad seat between the distance piece and/or the body or nozzle assembly.

5. If leakage occurs, verify that the body is tightly fastened in the retaining nut. If the leak continues, replace the nozzle.

6. While pressure is being applied, watch for an accumulation of fuel at the tip of the nozzle (Fig. 18). A small

amount of fuel may be present due to a previous chattering test - this would be normal. If the fuel accumulates and drips down during the test (about ten seconds) the nozzle assembly is defective and must be replaced.

Spray Test

For proper combustion, the nozzle must effectively atomize the injected fuel.

1. Operate the pump handle at a rate of 20 - 30 strokes per minute.

2. Observe the injector nozzle spray. The spray pattern should be finely atomized in a broad, straight stream (Fig. 19).

3. If the nozzle fails to spray properly, it must be cleaned, repaired or replaced. (See Nozzle Service in the Fuel System Repairs section of this chapter.)

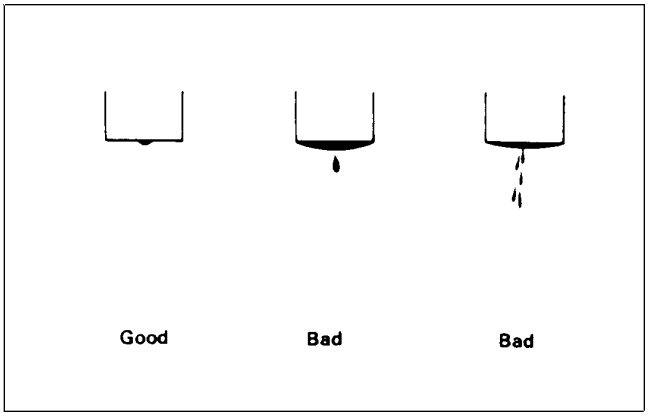

Figure 18

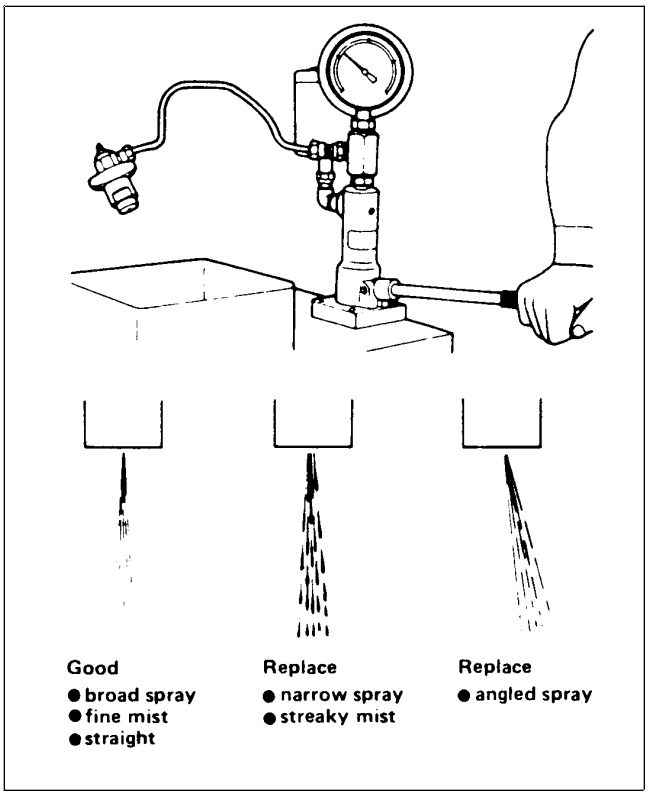

Figure 19

Injection Pump Test

Calibration of fuel delivery volumes, pressure and distribution between pump barrels should be performed by a professional diesel engine service shop. Special test fixtures and equipment are required.

It is possible to determine if the fuel injection pump requires service through a process of elimination using other fuel system tests. The following test procedure will help isolate fuel system difficulties.

1. Make sure that fuel is being supplied to the injector pump. (See Fuel Pump Test in this section and Bleeding Air From the Fuel System in the Fuel System Repairs section of this section.)

2. Check the operating condition of the injection nozzles to make sure that the injection pressure is correct. (See Injection Pressure Test in this section of the book.)

3. Make sure that the injection pump is providing sufficient fuel pressure to operate the nozzle by performing the following procedures:

A. Loosen the fuel delivery pipe from the number one nozzle.

B. Remove the nozzle from the cylinder head.

C. Connect the fuel delivery pipe to the nozzle assembly so the tip of the nozzle is pointed away from the engine. Tighten the fitting securely.

D. Put the throttle control in the FAST position. Turn the ignition key to the START position to crank the engine. Observe the nozzle.

DANGER

The injection pump forces fuel from the nozzle under extremely high pressure. Always point the nozzle tip away from yourself and any other personnel. Contact with the fuel stream, even though it appears to be a mist can cause fuel to penetrate clothing and skin. If fuel is injected into the skin get proper medical attention from a doctor immediately. A serious infection or other reaction can develop if the injury is not properly treated. Tighten all adapter fittings to prevent leaks. If a leak is suspected, use a piece of cardboard, not your hands to search for a leak.

If the nozzle produces an atomized mist of fuel the injector pump for that cylinder is operating properly. Failure of the nozzle to inject fuel can indicate a injection pump cylinder that is not operating correctly.

5. Repeat the test for the other cylinders.

Injection Timing Test

Injection timing can be adjusted by installing shims under the pump body. The timing is important because it determines when the fuel enters the combustion chamber.

The most accurate method of timing is done with an electronic diesel timing tester (available from major tool supply companies).

The following method is an initial setting for starting the machine.

1. Remove the number one injection pipe from both the pump and nozzle. (The number one cylinder is opposite from the flywheel end of the engine.)

2. Set up the injection pump for the test:

   A. Remove the delivery valve holder (Fig. 20). Remove the delivery valve and spring. The valve seat must remain in place.

   B. Replace the valve holder and tighten it in place.

   C. Connect the fuel injection pipe to the nozzle holder so the open end of the pipe will discharge fuel into a container.

3. Put the throttle control in the middle of its range of travel.

4. Slowly rotate the crankshaft counterclockwise from the flywheel end (normal rotation) until the IT marks (injection timing marks) on the crankshaft pulley are approximately 1/2 in. (21 mm) from alignment with the stationary pointer on the engine gear case (Fig. 21). Make sure the number one cylinder compression stroke is approaching by checking the push rods. Both push rods on the number one cylinder should be loose and the valves closed. If either push rod is tight, rotate the engine crankshaft one full revolution and inspect the push rods again.

5. Turn the ignition switch ON so the fuel pump will supply fuel through the injection pump and out the number one injection pipe.

6. Rotate the engine crankshaft slowly in the normal direction until the flow from the number one injection pipe just stops. This is the moment of actual injection timing. (A screwdriver inserted between the transmission drive hub and rubber coupler will provide control and leverage to slowly rotate the engine crankshaft.)

NOTE: Wear of the internal parts in the injection pump may allow the fuel to continue to drip from the injection pipe. If the slowest flow rate exceeds 1 drop in 5 seconds, repair of the pump should be considered.

7. Standard injection timing can be confirmed by the IT marks on the crankshaft pulley and the stationary pointer on the crankcase (Fig. 21).

The center mark on the pulley represents 19° BTDC; standard fuel injection timing. The outside marks represent 21° BTDC and 17° BTDC; the acceptable range of injection timing.

Shims are available in different sizes from 0.2 to 1.0 mm thick. Adding or removing a shim, 0.1 mm thick, will change injection timing by 1°. Increase shim thickness if injection is too early. Decrease shim thickness if injection is too late. (See Injection Pump Service in the Fuel System Repairs section of this chapter.)

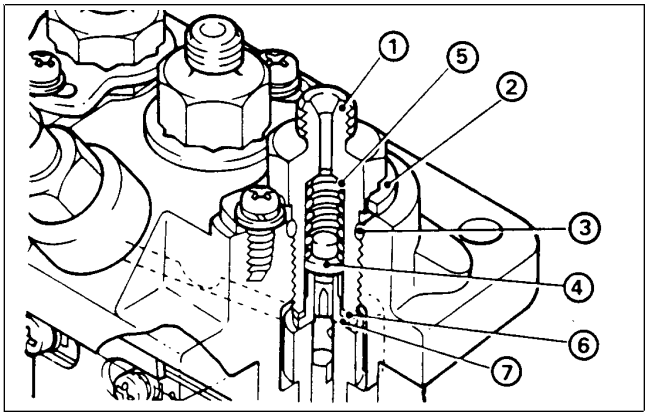

Figure 20

1. Delivery valve holder
2. Holder stopper
3. O-ring
4. Delivery valve
5.Spring
6. Gasket
7. Valve seat

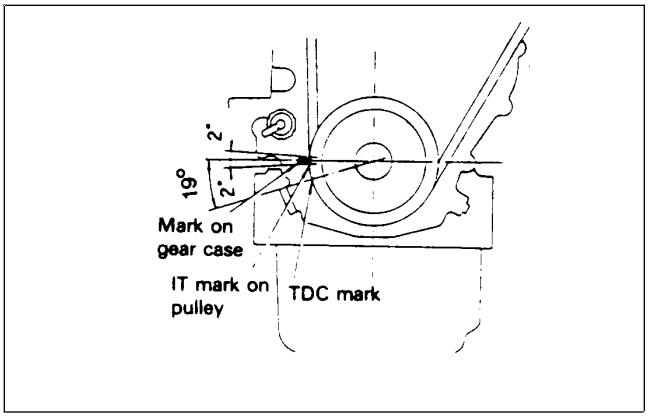

Figure 21

Fuel Pump Test

1. Turn the ignition switch to the ON position. Test for pump operation by listening for the pump oscillating sound, or by feeling for vibration which indicates the pump is operating.

2. If no pumping action occurs when the ignition switch is turned on, connect a 12 volt DC battery directly to the pump (Fig. 22). If the pump now operates, check for an electrical failure of the pump circuit, eg. fuses, connections, wires, etc.

3. The delivery of the fuel pump may be checked by disconnecting the fuel lines from the water separator and fuel filter and routing them to a can of filtered diesel fuel and a drain pan (Fig. 22). Activate the pump and measure the amount of fuel pumped in during a 15 second time interval. The standard pump rate is approximately 8 ounces (225 cc) in 15 seconds.

4. If the fuel delivery rate is below the standard value the pump should be disassembled and checked. (See Fuel Pump Service in the Fuel System Repairs section of this chapter.)

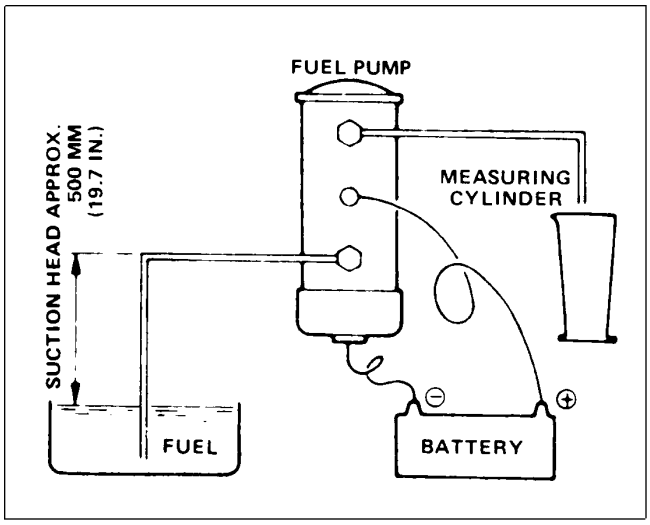

Figure 22

Thermostat Test

If the engine overheats and a faulty thermostat is suspected, the thermostat should be tested.

1. Remove the thermostat (see Thermostat Removal and Installation in the External Engine Component Repair section of this chapter).

2. Put the thermostat in a container of water with a thermometer and heat the water (Fig. 23).

Valve cracking temperature: 76.5° C (177° F).
Full-open temperature: 90° C (194° F)
Valve lift: 8 mm (0.314 in.)

3. If the thermostat fails to open, only partially opens, or sticks, it should be replaced.

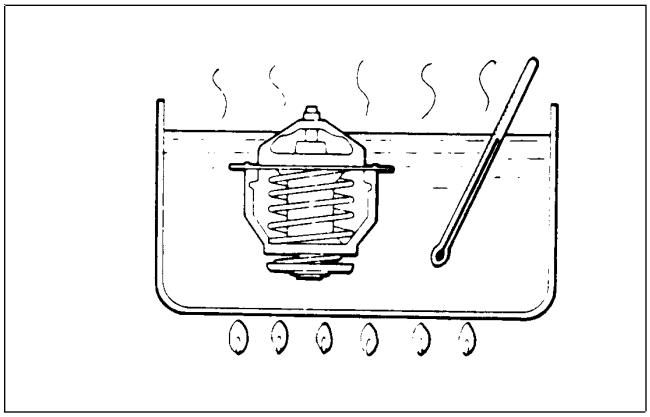

Figure 23

Preparation for Engine Repair

1. Before cleaning and disassembly, carefully check for problems that cannot be found after the engine has been cleaned or disassembled (e.g. oil leaks from cracked components, gaskets or loose fittings, damaged air cleaner or breather hoses that could cause cylinder wear, etc.). Make a note of any problems that you find.

2. Clean or wash the engine exterior thoroughly before disassembly.

IMPORTANT: Do not spray water on a hot engine. Injection pump seizure or other failures could result.

3. Do not disassemble or remove parts that do not require disassembly.

4. Disassemble the engine in proper order, arranging the parts the disassembled parts neatly. Apply clean engine oil to disassembled parts, as necessary to prevent rust.

5. Keep the work area clean; dirt causes engine failures.

6. Be very careful when working on fuel system components. Cover the work area with clean paper. Store components of the nozzles or injector pump in clean fuel oil. Do not allow components to strike each other or other objects. Wet hands with clean diesel fuel before handling these parts.

Engine Compression

The time interval to overhaul the engine can most accurately be determined by regular and systematic cylinder compression measurement. (See Compression Test in the Testing section of this chapter.)

Cylinder and Cylinder Block Overhaul

Before removing any parts, disassembly or overhaul of the Mitsubishi engine, it is very important to understand the nature and probable cause of the problem that made an overhaul necessary.

When the engine trouble is caused by worn cylinders, rings or valves, one or more of the following symptoms will occur:

1. Low engine power, and a decrease in compression pressure.

2. Increased fuel consumption.

3. Increased lubricating oil consumption.

4. Poor engine starting.

5. Loud noises in the engine.

It is important to find the cause of the engine failure before beginning repair. Symptoms 2 and 3 in the above list can be a result of excessive fuel injection, improper injection timing, or nozzle and injection pump wear. Poor starting may be a result of electrical problems. Noises may be associated with a mechanical part outside the engine. Excess fuel or oil consumption may be the result of leaks. (See the Troubleshooting section of this chapter.)

Another indicator of the need for an overhaul is oil consumption. Make sure the engine does not leak oil. when the oil consumption between the oil change maintenance interval is approximately 1-1/2 times normal (150%), engine overhaul should be considered.

With a good knowledge of how the engine operates, access to maintenance and compression test records, and information in the Troubleshooting section of this chapter, unnecessary disassembly and inspection can be eliminated.

Fan Belt and Alternator Belt Replacement

1. Put machine on a level surface, engage parking brake, stop engine and remove key from ignition switch. Open hood.

2. Loosen locknut on belt tensioner lever (Fig. 24a). If replacing alternator belt, loosen bolt securing alternator brace to engine and bolt securing alternator to brace (Fig. 24b).

3. Remove two capscrews securing transmission drive shaft coupler to engine crankshaft pulley (Fig. 24c). Do not disconnect drive shaft from transmission.

4. Move drive shaft out of the way so the belt(s) can be removed. Remove belts by carefully moving around fan blades.

5. Install new belt(s).

6. Connect drive shaft coupler to engine crankshaft pulley with two capscrews and lockwashers.

7. Adjust belt tension:

Alternator belt: Insert pry bar between alternator and engine and carefully pry alternator out until proper tension is achieved. Belt should deflect 3/8 to 1/2 in. when 22 lb. of force is applied to belt midway between crankshaft pulley and alternator pulley. Tighten alternator and brace bolts to secure adjustment.

Cooling fan belt: Apply 5 - 10 lb. of force at end of lever. Tighten lock nut to secure adjustment.

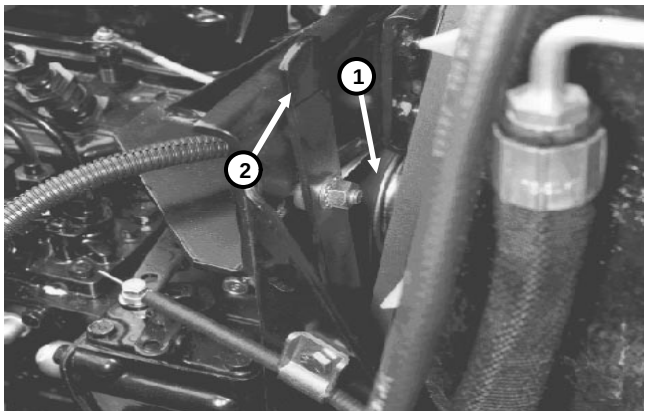

Figure 24a

1. Fan belt **2. Tensioner lever**

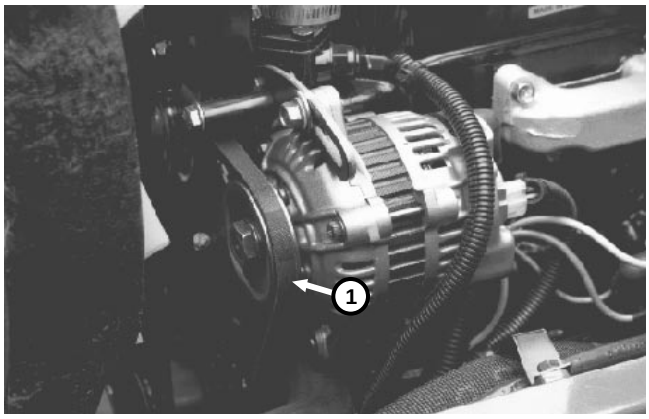

Figure 24b

1. Alternator belt

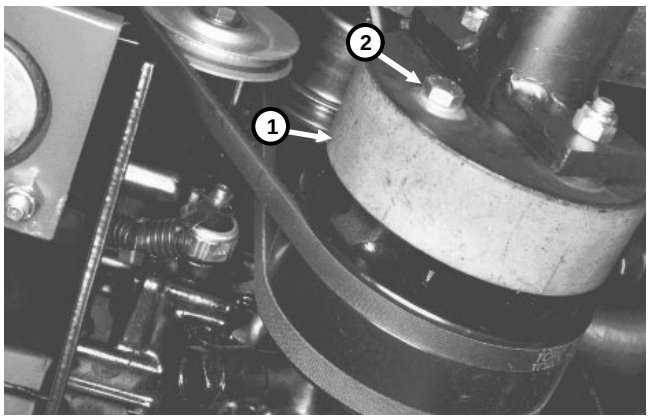

Figure 24c

1. Drive shaft coupling **2. Capscrew & lockwasher (2)**

Alternator Removal and Installation

1. Disconnect the negative (–) cable from the battery.

2. Disconnect the wire from terminal “B” on the back of the alternator.

3. Disconnect the alternator wiring harness connector.

4. Loosen alternator brace bolt and alternator support bolt (Fig. 25). Push the alternator toward the engine and remove the belt.

5. Remove the alternator.

6. Reverse steps 1 - 5 to install the alternator. Make sure the spacer and shim is installed on the alternator support bolt between the alternator lower rear bracket and gear case bracket (Fig. 26).

7. Insert a pry bar between the alternator and engine and pry out alternator. Apply only enough pressure to get the correct belt tension.

8. Hold the alternator in position after you get proper belt tension and tighten the alternator brace bolt. Tighten the alternator support bolt. For proper tension, the belt should deflect 3/8 to 1/2 in. when 22 lb. of force is applied midway between alternator and crankshaft pulleys.

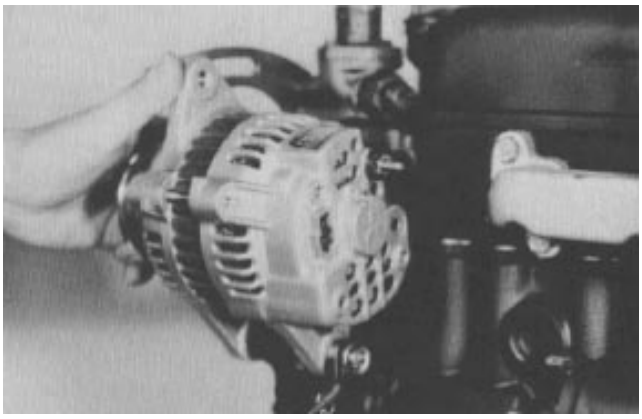

Figure 25

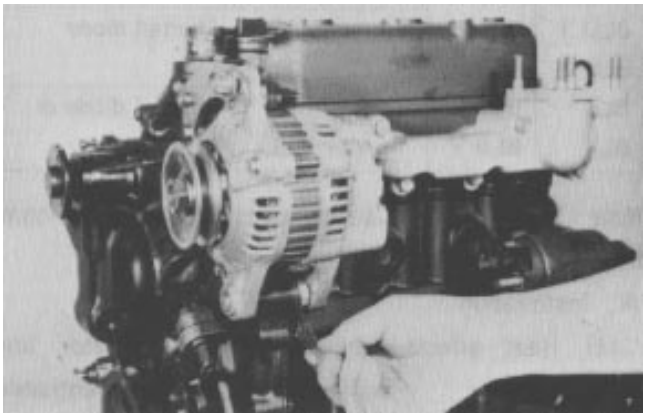

Figure 26

Starter Removal and Installation

1. Disconnect the negative (–) cable from the battery.

2. Disconnect the wires from the starter solenoid (Fig. 27).

3. Remove the two cap screws and washers securing the starter to the bracket.

4. Remove the starter.

5. Reverse steps 1 - 4 to install the starter.

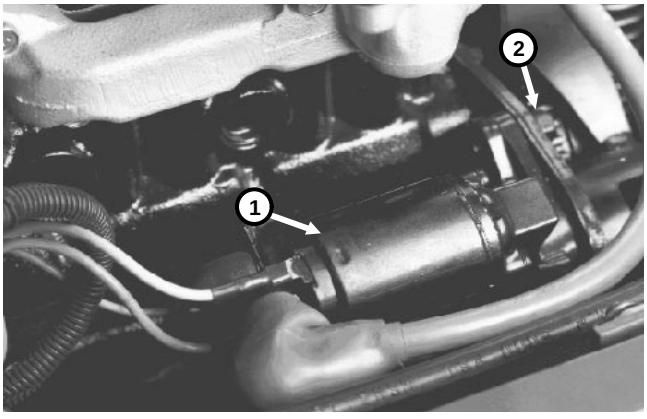

Figure 27

1. Starter solenoid **2. Cap screw and washer (2)**

Replacing and/or Adjusting Engine Stop Solenoid

See Chapter 5 - Electrical System for information about testing the engine stop solenoid.

An improperly adjusted stop solenoid can result in failure of the engine to stop when the key switch is turned off or could cause injection pump damage or malfunction.

Removing the Stop Solenoid

1. Stop the engine. If the engine will not stop when the ignition key switch is turned off, manually push the stop lever (Fig. 14) toward the rear of the machine until the engine stops.

2. Disconnect the solenoid electrical connector.

3. Loosen the nut securing the solenoid to the engine and unscrew the solenoid.

4. If you will be installing a new solenoid, remove the gasket and nut from the old solenoid and install them on the new solenoid. Thread the nut completely on the new solenoid.

Installing and/or Adjusting the Stop Solenoid

1. Remove the governor tie rod cover (Fig. 28).

2. Apply thread sealant to the solenoid threads.

3. Thread the solenoid into the engine.

4. Thread the solenoid into the engine while moving the tie rod back and forth (Fig. 29). Stop screwing the solenoid into the engine when there is no free play in the tie rod.

5. Turn the solenoid outward (counterclockwise) 1/4 to 1/2 turn. There should be a small amount of free play in the injector pump control rack 0.01 - 0.03 in. (0.3 - 0.7 mm).

IMPORTANT: No free play in the control rack with the solenoid de-energized (plunger out) may cause injection pump damage or malfuntion. Excess free play 0.04 in. (1 mm) or more will prevent the engine from stopping when the solenoid is de-energized.

6. Remove the cover cap screw from the engine to get access to the solenoid nut (Fig. 28).

7. Hold the solenoid body to prevent it from turning and tighten the nut against the engine to secure the adjustment. Do not over tighten the nut. If the nut is over tightened, the solenoid may become distorted and will not operate correctly.

8. Install the cover cap screw that was removed from the engine in step 6.

9. Connect the solenoid electrical connector.

10. Install the governor tie rod cover.

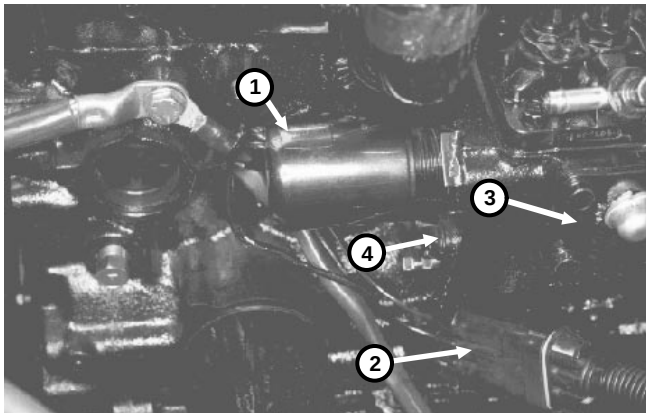

Figure 28

1. Fuel stop (ETR) solenoid
2. Solenoid electrical connector
3. Governor tie rod cover
4. Cover cap screw

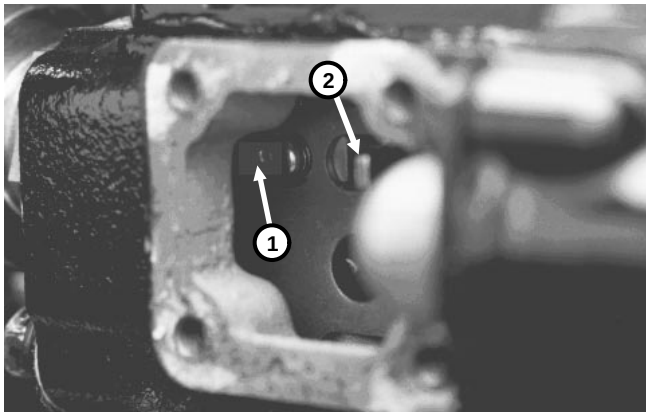

Figure 29

1. Solenoid plunger
2. Tie rod

Glow Plug Replacement

Replace the glow plug(s) if they do not operate correctly. (See Glow Plug Test in the Testing section of this chapter.)

1. Remove the nut and lead wire.

2. Clean the area around the glow plug. This will prevent dirt or other contamination from falling through the glow plug hole into the cylinder.

3. Remove the glow plug.

4. Install a new glow plug. Tighten the glow plug to a torque of 11-14.5 ft-lb (1.5-2 KgM).

5. Install the lead wire and nuts.

Oil Pressure Switch Replacement

The engine is equipped with an oil pressure switch (Fig. 30). This switch activates a lamp on the control panel and a buzzer if the oil pressure drops below safe levels during operation.

Pressure switch ON pressure: 0.5 kg/cm^2 (7 psi)

Replace the switch if it is not operating correctly. Before installing the switch put a small amount of LOCTITE #567 Thread Sealant (or equivalent) on the switch threads. When installing the switch make sure the sealant does not block the oil hole in the switch.

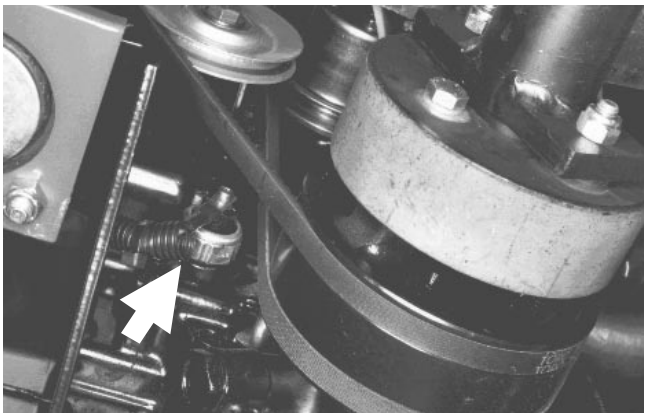

Figure 30

Thermostat Removal and Installation

1. Lower the coolant level to below the thermostat.

2. Loosen the hose clamp and disconnect the hose from the water outlet fitting.

3. Remove the water outlet fitting and gasket (Fig. 31).

4. Replace the thermostat if necessary (See Thermostat Test in the Testing section of this chapter).

5. Do not allow the thermostat flange to protrude from the water outlet fitting joint. Do not place thermostat stay in the direction of thermoswitch hole. Use a new gasket when installing the water outlet fitting.

6. Check for damaged hoses or damaged hose clamps. Replace as required. Install the hose on the water outlet fitting and tighten the hose clamp.

7. Fill the cooling system to the proper level with a 50/50 solution of clean, soft water and ethylene glycol antifreeze (See Checking the Cooling System and Changing Coolant in the Maintenance section of this book.).

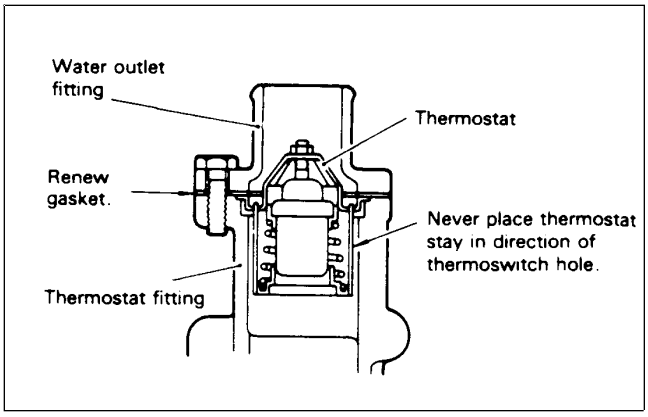

Figure 31

Water Pump Service

1. Drain the cooling system.

2. Remove the drive belt from the water pump and alternator.

3. Loosen the hose clamp and disconnect the hose from the water pump.

4. Remove the water pump (Fig. 32).

5. Check the water pump for cracks or leaks. Rotate the water pump shaft by hand. If the bearings do not rotate smoothly, or are noisy replace the water pump with a new water pump. There are no replaceable parts in the water pump.

6. Install the water pump and a new gasket onto the cylinder block.

7. Check for damaged hoses or damaged hose clamps. Replace as required. Install the hoses on the water pump and tighten the hose clamps.

8. Install the alternator / water pump drive belt.

9. Insert a pry bar between the alternator and engine and pry out alternator. Apply only enough pressure to get the correct belt tension.

10. Hold the alternator in position after you get proper belt tension and tighten the alternator brace bolt. Tighten alternator the support bolt. For proper tension, belt should deflect 3/8 to 1/2 in. when (22 lb.) of force is applied midway between alternator and crankshaft pulleys.

11. Fill the cooling system with a 50/50 solution of clean, soft water and ethylene glycol antifreeze.

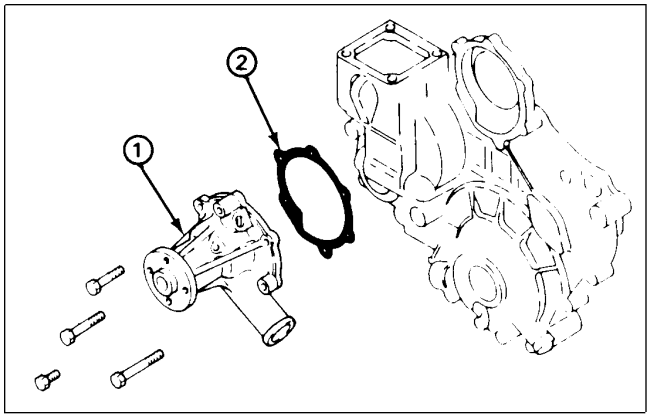

Figure 32

1. Water pump
2. Gasket

Governor System Repairs

Governor Operation

The governor keeps the engine operating at a constant speed by balancing the centrifugal force acting on the governor weights and the governor spring tension. As the engine picks up speed, the governor weights open to move the sliding shaft forward. The shaft pushes on the governor lever to move the injector control rack and decrease the fuel injection rate. At the same time the governor spring is pulled by the governor lever until the spring force is balanced with the centrifugal force of the governor weights, thus maintaining constant engine speed.

When the speed control lever is pulled toward high speed, the governor spring is pulled. The spring pulls on the governor lever to move the governor control rack and increase the fuel injection rate. As engine speed increases, the governor weight centrifugal force also increases until it is balanced with the governor spring force, thus maintaining a constant engine speed.

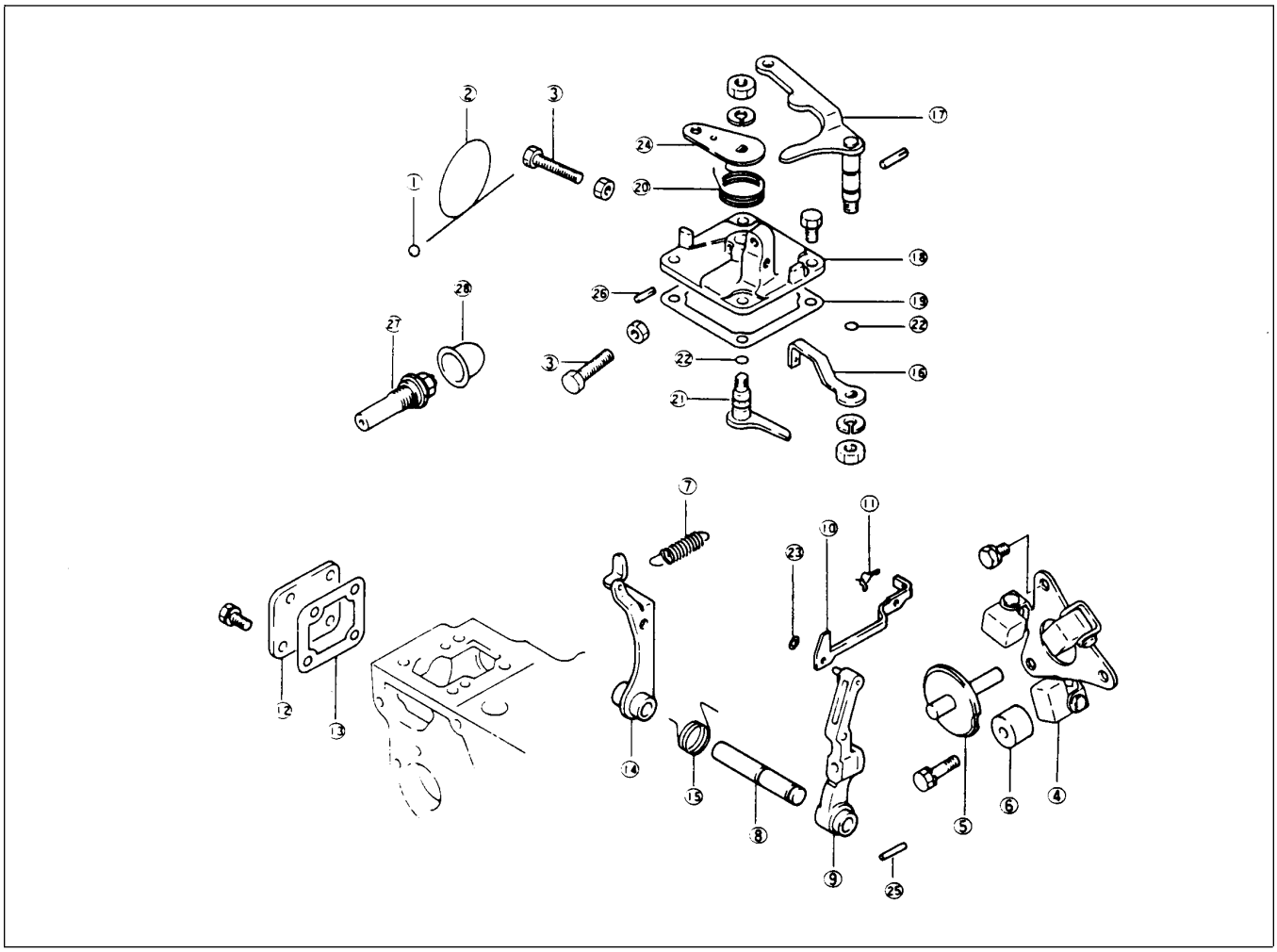

Figure 33

1. Sealing metal
2. Sealing wire
3. Speed adjustment screw
4. Governor weight assembly
5. Sliding shaft
6. Stopper
7. Governor spring
8. Governor shaft
9. Governor lever
10. Tie rod
11. Tie rod clip
12. Tie rod cover
13. Tie rod cover gasket
14. Tension lever
15. Start spring
16. Governor spring lever
17. Speed control lever ass'y
18. Governor cover gasket
19. Governor cover gasket
20. Return spring
21. Stop lever assembly
22. O-ring
23. Snap ring
24. Stop lever
25. Grooved pin (3 x 20 mm)
26. Grooved pin (3 x 14 mm)
27. Torque spring set
28. Sealing cap

Governor Inspection

A governor failure can cause engine starting failure, loss of engine speed control, or engine surging (hunting). Before removal and disassembly of the engine the following inspections are recommended:

1. Stop the engine, lower the implement and engage the parking brake. Open the engine hood.

2. Remove the governor tie rod cover (Fig. 28).

3. While holding the stop lever (Fig. 33) in the stop position (towards the rear of the machine) turn the ignition key switch quickly to the START position and release it to the ON positon. This will retract the stop solenoid plunger, allowing movement of the injection pump control rack.

4. Push the tie rod forward only with only enough force to overcome the spring pressure and operate the speed control lever (or throttle lever). You should feel the governor lever, under spring tension, move the tie rod and control rack as the lever is operated.

5. If the control rack does not move move correctly, disconnect the tie rod from the injection pump control rack. Make sure the injection pump control rack moves freely. If it does not, check for injection pump problems.

6. Failure of the speed control lever or governor lever to move when the tie rod is disconnected may indicated a problem with internal parts of the governor.

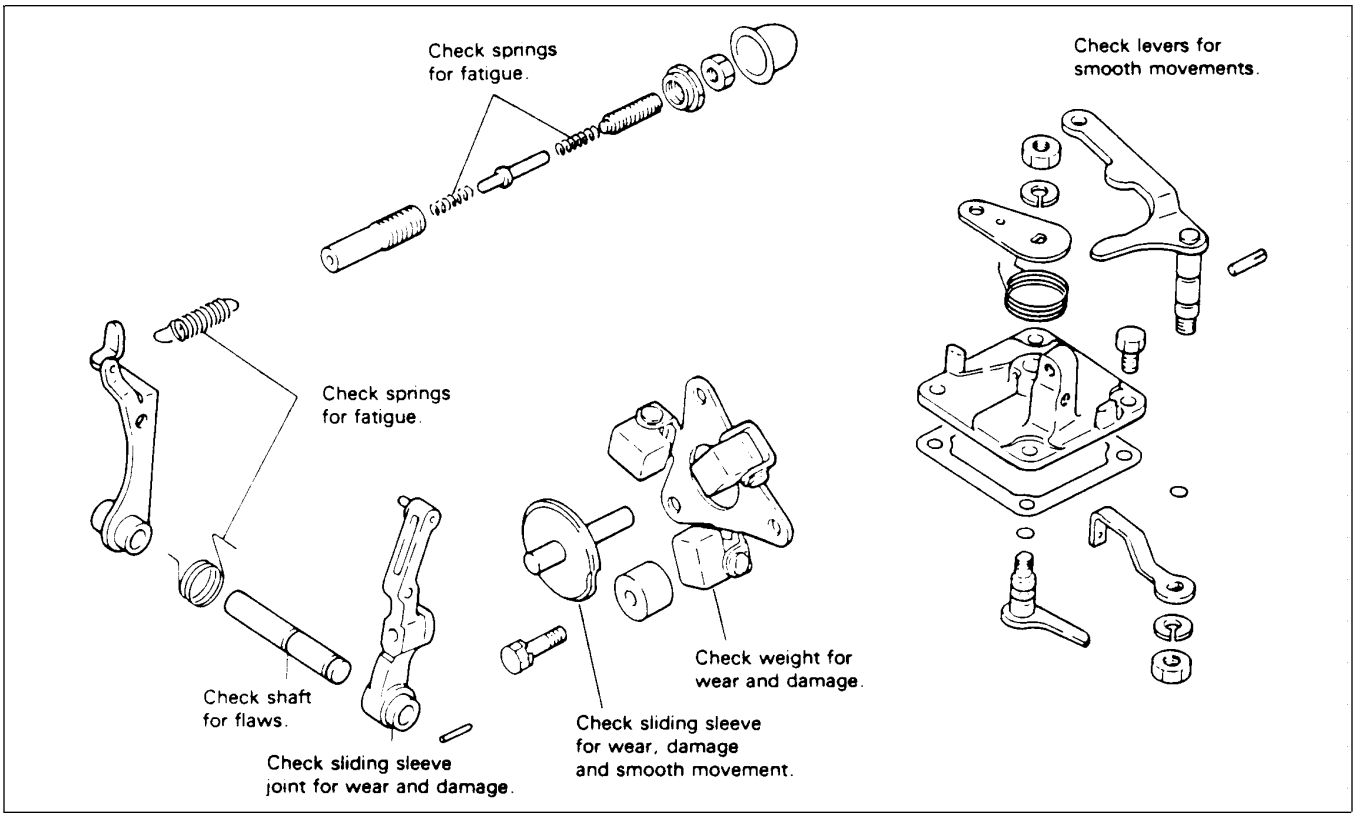

Figure 34

Governor Service

1. Remove the tie rod cover (Fig. 33).

2. Remove the tie rod clip and disconnect the tie rod from the injection pump control rack.

3. Disconnect the governor spring from the tension lever.

4. Remove the cover assembly.

5. Removing the levers:

   A. To remove the levers, pull out the grooved pins from the governor lever, stop lever and speed control lever.

   B. Loosen the bolts securing the levers and shafts.

6. Installing the levers:

   A. Coat the o-rings with oil before installation.

   B. Install the levers and shafts. After press fitting each grooved pin, check the shaft for smooth operation.

   C. Install the governor spring lever and speed control lever so there is a minimum play of angle between levers (Fig. 35) .

   D. The governor spring should not deflect more than 20 mm (0.8 in.) when installed.

9. Inspect all parts for wear or damage and smooth operation.

10. Reverse steps 1 - 4 to reassemble. After assembly, make sure that the governor mechanism operates smoothly.

NOTE: Further governor repairs require removal of the gear case (See Gear Case and Oil Pump in the Cylinder Block Overhaul section of this chapter).

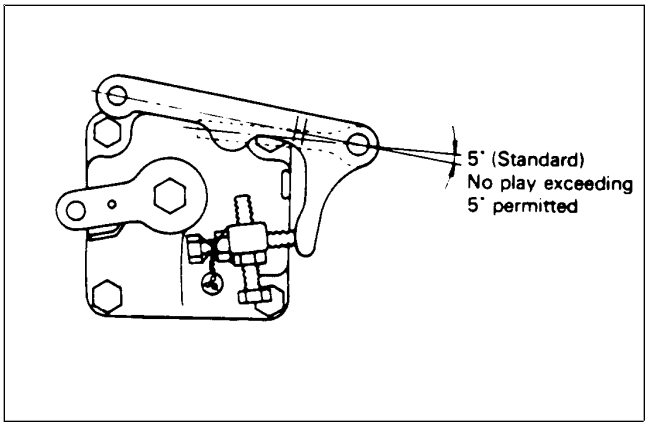

Figure 35

Installation of Torque Spring Set

IMPORTANT: Torque spring set adjustment has been done and sealed at the factory. Do not remove, disassemble or adjust this device unless necessary. The torque spring set adjustment is very sensitive. Improper adjustment can vary fuel delivery to under power or over fuel the engine.

1. Engage the parking brake. Make sure the high speed set bolt is adjusted to the correct engine speed of $3200\ ^{+50}_{-\ 0}$ rpm (See Adjusting Engine Speed in the Maintenance section of this chapter).

NOTE: Specified rpm is with no load on engine.

2. Operate the engine at high idle speed.

3. Turn the torque spring set (Fig. 36) clockwise until engine speed drops approximately 50 rpm from high idle speed.

4. From this position, turn the back the torque spring set (counterclockwise) "N" turns (2.8 turns). Lock the torque spring set in position with the special nut.

5. Install the sealing cap.

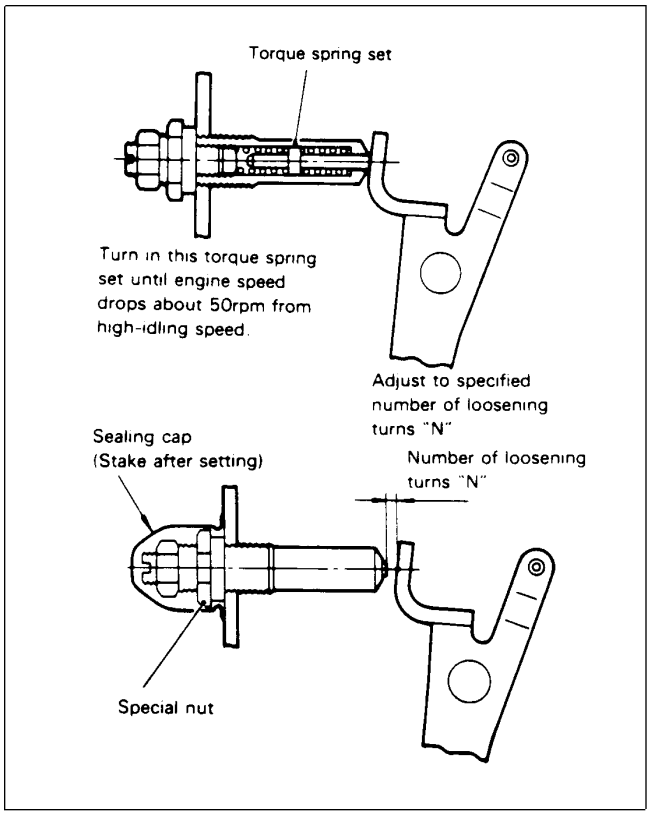

Figure 36

Assembly of Torque Spring Set

If the torque spring set has been disassembled or parts replaced, reassemble and adjust the torque spring set using the following procedure.

IMPORTANT: The torque spring set has been adjusted and sealed at the factory. Do not remove, disassemble or adjust this device unless necessary. The torque spring set adjustment is very sensitive. Improper adjustment can vary fuel delivery to under power or over fuel the engine.

1. Assemble the torque spring set as shown in Figure 37.

2. Use a screwdriver operated by fingertips to lightly tighten adjustment screw until resistance to rotation is felt. Lightly lock the screw in position with locknut.

3. Set dial on spring scale to zero (0). Tighten spring case until a value of 970^{+10}_{-0} grams is obtained. Lock the spring case in that position with special nut.

4. Temporarily loosen adjustment screw until to get a value of 770 grams then retighten the screw until a value of 970^{+10}_{-0} grams is attained. Lock the adjustment screw in position with locknut.

5. To inspect torque spring set for proper adjustment, use a test set up as shown (Fig. 38). Gradually push scale against torque spring set until stopper is moved (or pointer of dial indicator moves). Check that load applied to torque spring at that moment is 950^{+20}_{-30} grams.

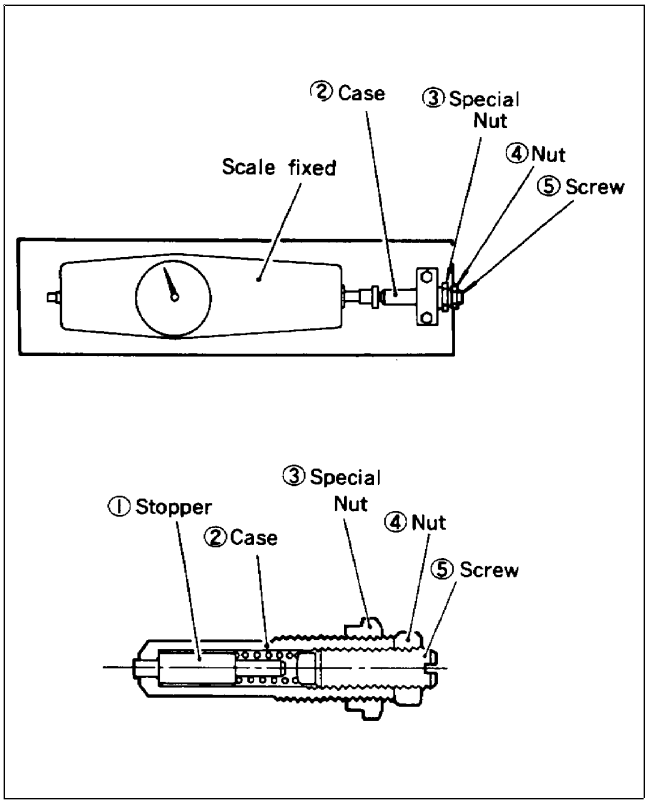

Figure 37

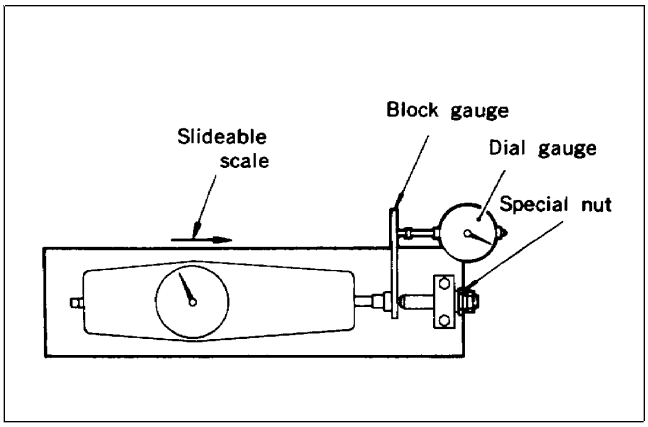

Figure 38

Fuel System Repairs

When cleaning the engine, DO NOT spray water onto a hot injection pump. This could cause the fuel pump to seize and be damaged.

When working on the fuel system, ALWAYS make sure that the equipment and work area is clean. The close tolerance parts of the fuel system can be easily damaged by dirt.

Wash fuel system parts in clean fresh diesel fuel. If parts are removed for a period of time, store them in containers of clean diesel fuel to prevent corrosion.

Bleeding the Fuel System

1. Stop the engine and engage the parking brake. Open the hood.

2. Loosen the air bleed screw on the fuel filter / water separator (Fig. 39).

3. Turn the ignition key switch to the ON position. The electric fuel pump will begin to operate and force fuel out around the screw loosened in step 2. Fuel will fill the filter bowl and then flow out around the screw. When a solid stream of fuel flows out around the screw, tighten the screw and turn the key switch OFF.

4. Open the air vent screw on the fuel injection pump (Fig. 40).

5. Turn the ignition key switch to the ON position. The electric fuel pump will begin to operate and force fuel out around the injection pump air vent screw. When a solid stream of fuel flows out around the screw, tighten the screw and turn the key switch OFF.

NOTE: Normally the engine should start after this procedure. If the engine does not start, air may be trapped between the injection pump and injectors (See Bleeding Air From the Injectors in this section of the book.)

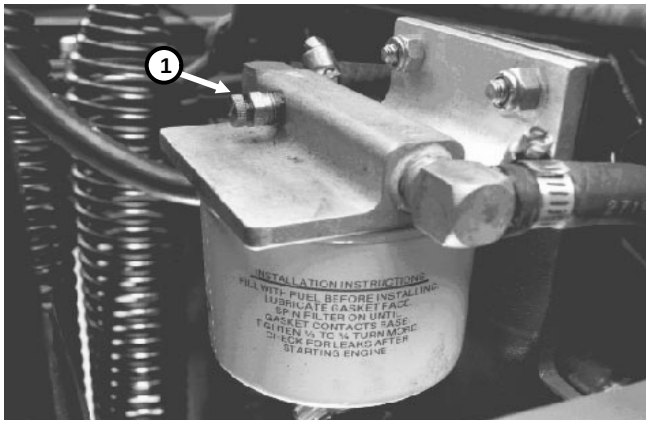

Figure 39

1. Bleed screw

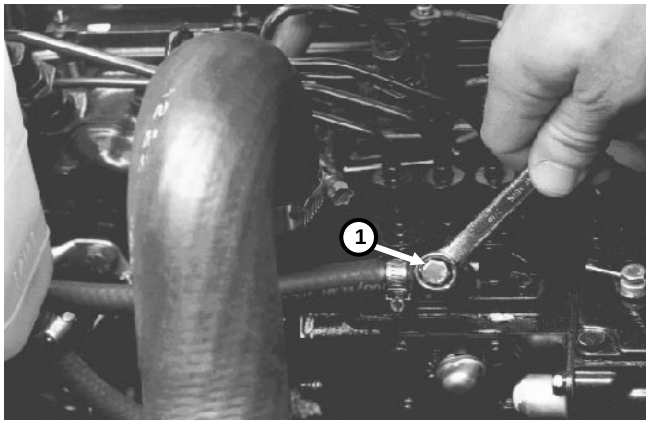

Figure 40

1. Fuel injection pump air vent screw

Bleeding Air From the Injectors

This procedure should only be used if the fuel system has been purged of air. (See Bleeding the Fuel System in this section of the book.)

1. Loosen the pipe connection at the number one nozzle and holder assembly on the cylinder head (Fig. 41).

2. Move the throttle control to the FAST position.

3. Turn the ignition key to the START position to crank the engine and pump fuel to the nozzles. Turn the ignition key to the OFF position when a steady stream of fuel flows out of the loose pipe connection.

4. Tighten the pipe connector.

5. Repeat steps 1 - 4 for the No. 2 and No. 3 injector nozzle and holder.

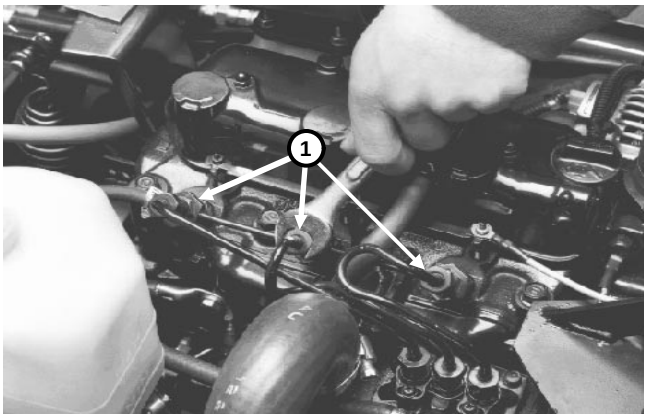

Figure 41

1. Fuel injector nozzle and holder (3)

Fuel Pump Service

The only serviceable parts of the fuel pump are the magnet, filter, and the gaskets on each end of the filter.

1. Disconnect the fuel pump wires from the wiring harness and ground connection.

2. Disconnect the fuel hoses from the pump. Plug the fuel lines.

3. Remove the two screws which secure the pump to the frame.

4. Use a 17 mm wrench to remove the cover from the fuel pump (Fig. 42). Remove the gasket, magnet and filter element.

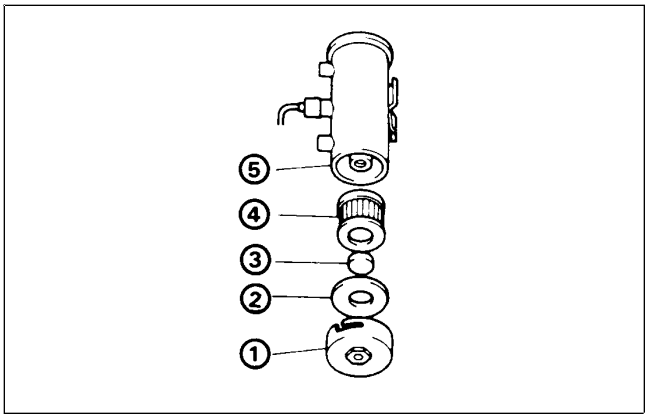

Figure 42

1. Cover
2. Cover gasket
3. Magnet
4. Filter
5. Body

5. Carefully remove the spring retainer from the end of the plunger tube (Fig. 43). Remove the washer, o-ring, valve, plunger spring and plunger.

IMPORTANT: Be careful not to bend or deform the plunger tube while disassembling the fuel pump. If the plunger tube is bent, the fuel pump plunger will bind and the pump will need to be replaced.

6. Install the plunger (valve side out), plunger spring, valve, o-ring, washer and spring retainer. Make sure the plunger operates freely.

7. Install the filter and cover gaskets, magnet, filter and cover. Tighten the cover to prevent air leaks.

8. Install the fuel pump to the frame. Connect the fuel lines and electrical wires.

9. Bleed the fuel system. (See Bleeding the Fuel System in this section of the book.)

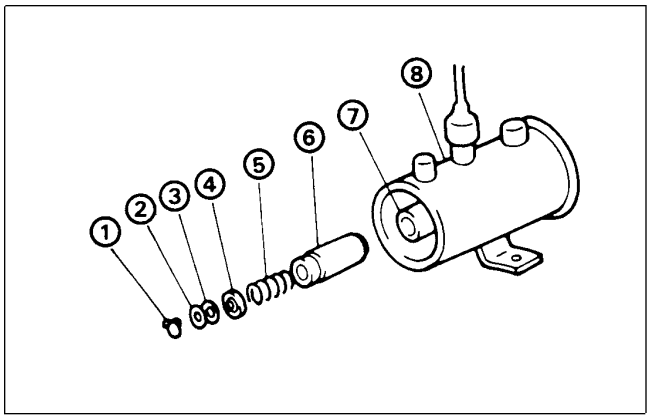

Figure 43

1. Spring retainer
2. Washer
3. O-ring
4. Valve
5. Plunger spring
6. Plunger
7. Plunger tube
8. Body

Injection Pump Service

Do not attempt the disassemble the injection pump unless it is necessary. If the pump is damaged or defective, it is recommended to replace the pump.

IMPORTANT: Clean the injection pump and the area near the injection pump before removing or servicing it. DO NOT spray water onto a hot injection pump.

Removing and Installing the Injection Pump

1. Remove the engine stop solenoid (see Replacing and/or Adjusting Engine Stop Solenoid in the External Engine Component Repair section of this chapter).

2. Disconnect the fuel pipes from the injector nozzles and injection pump delivery valve holders. Loosen the hose clamp and disconnect the fuel hose.

3. Remove the tie rod cover. Remove the tie rod clip and disconnect the tie rod from the injection pump control rack (Fig. 45).

4. Remove the four (4) injection pump mounting bolts. Remove the injection pump from the cylinder block. Make a note of the number and thickness of the adjusting shims under the pump. (The shims determine the injection timing.)

5. Reverse steps 1 - 4 to install the injection pump. Make sure the Engine Stop Solenoid is adjusted correctly. (See Replacing and/or Adjusting Engine Stop Solenoid in the External Engine Component Repair sectoin of this chapter.)

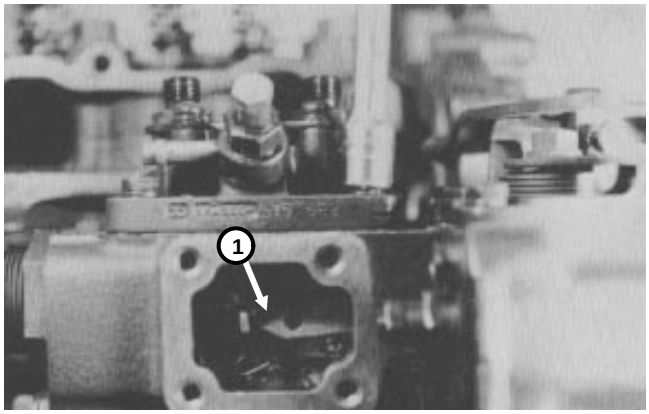

Figure 45

1. Tie rod (disconnected)

Injection Pump Disassembly

IMPORTANT: Do not mix the delivery valves, delivery valve seats, plungers or plunger barrels from one cylinder to another. These are parts are "matched sets". Handle these parts carefully. Place the parts in a container of clean diesel fuel to prevent corrosion.

1. Remove the stopper holder. Remove the delivery valve holder (Fig. 46).

2. Remove the valve spring, delivery valve and o-ring. Remove the gasket and valve seat.

3. Remove the tappet roller and stopper pin. Remove the tappet and adjusting shim.

4. Remove the lower seat from the plunger. Remove the plunger spring and upper seat

5. Remove the two screws securing the bracket to the pump housing. Remove the control rack.

IMPORTANT: DO NOT loosen the adjusting screws on the control rack for each cylinder. If these parts are removed, it is necessary to measure fuel injection quantity with a pump tester and cam box.

7. Remove the sleeve and plunger. Remove the plunger barrel upward from the pump housing.

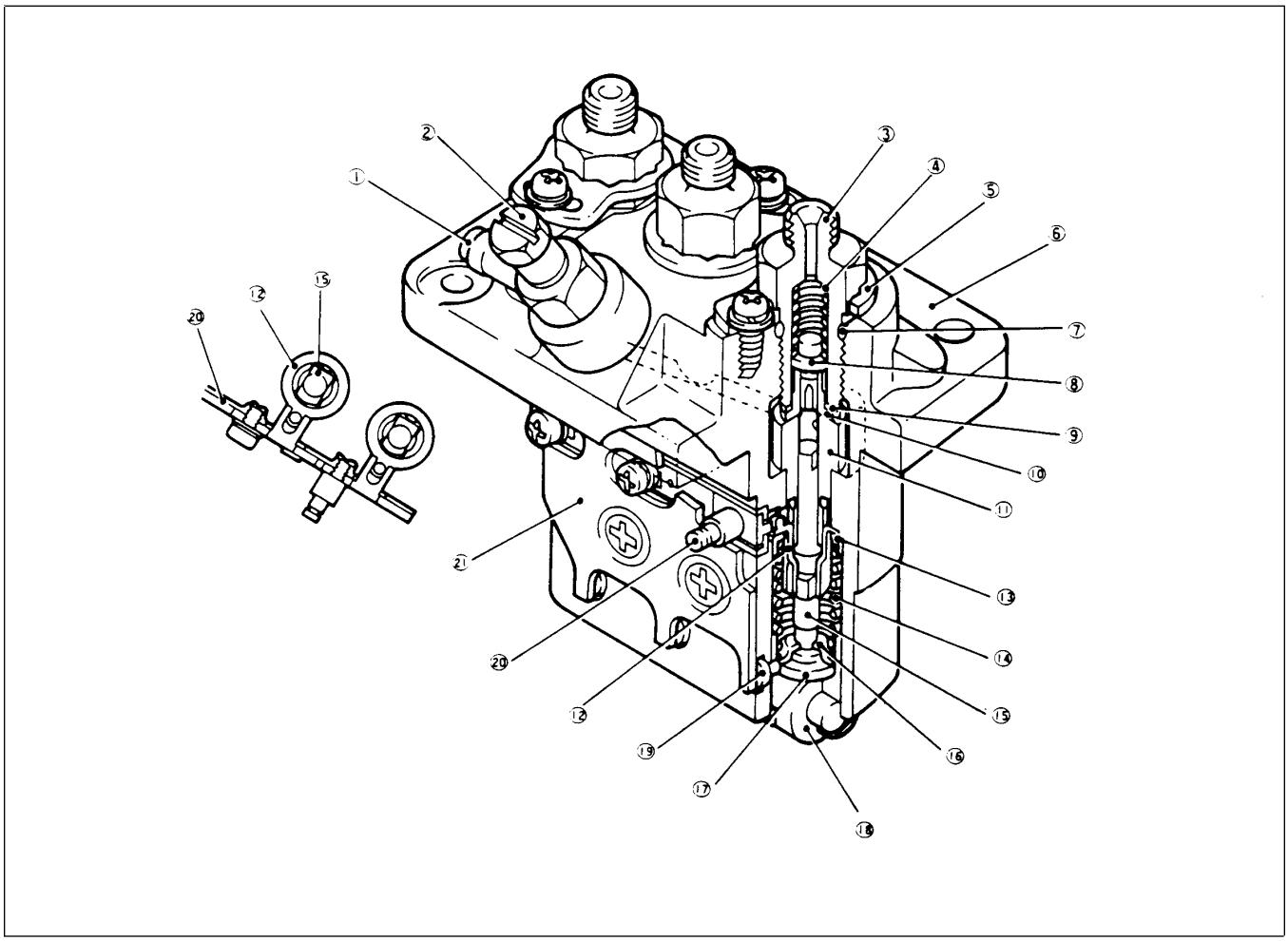

Figure 46

1. Union collar
2. Air vent screw
3. Delivery valve holder
4. Valve spring
5. Holder stopper
6. Housing
7. O-ring
8. Delivery valve
9. Gasket
10. Valve seat
11. Plunger barrel
12. Sleeve
13. Upper seat
14. Plunger spring
15. Plunger
16. Lower seat
17. Adjusting shim
18. Tappet roller
19. Pin
20. Control rack
21. Bracket

Injection Pump Inspection

Inspect the injection pump parts for proper operation, wear, corrosion, seizure, etc. (Fig. 47). Replace worn or damaged parts.

Injection Pump Assembly

1. Insert the plunger barrel into the housing.

2. Install the delivery valve seat, gasket, delivery valve and valve spring. Install the o-ring on the delivery valve holder. Temporarily tighten the delivery valve holder.

3. Insert the control rack. Insert the sleeve. Align the match mark on the rack with that on the pinion (sleeve).

4. Insert the upper seat. Insert the plunger spring.

5. Fit the lower seat to the plunger. Insert the plunger into the barrel (Fig. 48).

6. Push in the tappet roller assembly and install the stopper pin.

7. Tighten the delivery valve holder to a torque of 3.5 - 3.9 Kgm (25 - 28 ft-lb). Install the holder stopper.

9. Before installing the injection pump, make sure the control rack slides smoothly, with little resistance. If the control rack binds, it is assembled incorrectly or parts are dirty. The pump must then be reassembled correctly and/or cleaned.

10. Install the injection pump to the cylinder block. Make sure that the same number and size shims that were under the pump when it was removed are installed.

11. Install the fuel line and delivery pipes.

12. Bleed air from the fuel system. (See Bleeding the Fuel System and Bleeding Air From the Injectors in this section of the book.)

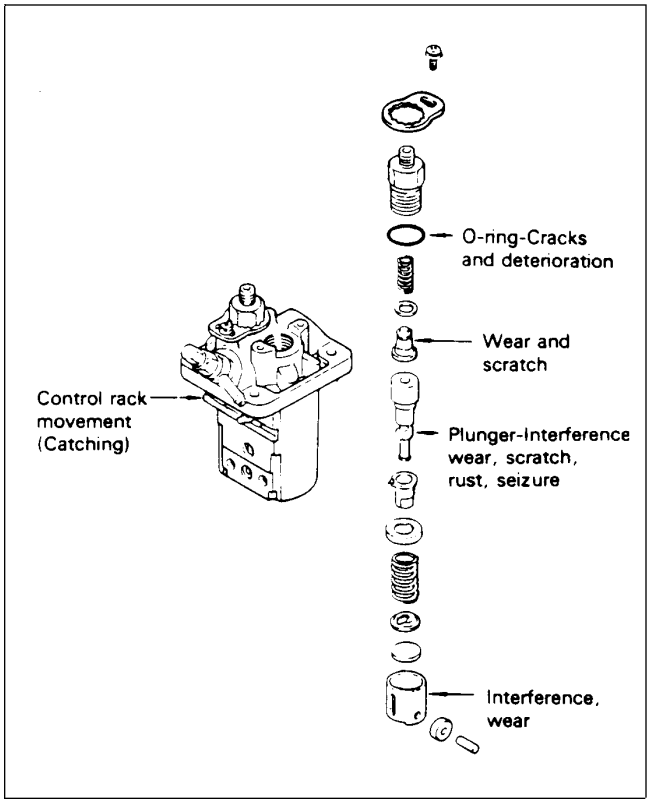

Figure 47

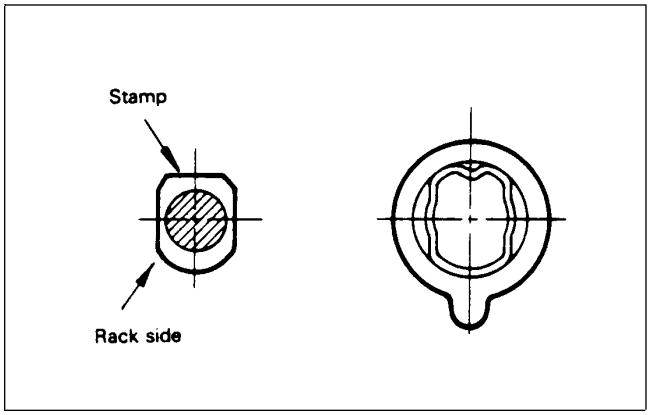

Figure 48

Nozzle Service

IMPORTANT: When servicing the injection nozzles make sure that the engine and fuel delivery pipes are clean to prevent dirt from entering cylinder or nozzle. Do not mix components of one nozzle with the other.

Nozzle Removal and Disassembly

1. Disconnect the injection pipes and fuel return pipe.

2. Remove the injector nozzle from the cylinder head.

NOTE: Further disassembly of the nozzle is not required for the nozzle to be tested. (See Nozzle Tests in the Testing section of this chapter.)

3. Secure the nozzle holder in a vise that has aluminum or brass jaw plates. To prevent deformation do not clamp the vise onto the retaining nut (Fig. 49).

4. Remove the retaining nut, shim washer, spring, pin, and distance piece.

6. Remove the nozzle assembly from the retaining nut. If it is difficult to remove, tap it lightly with a rubber or wooden mallet. IMPORTANT: Be careful not to hit or damage the protruding tip of the nozzle needle valve.

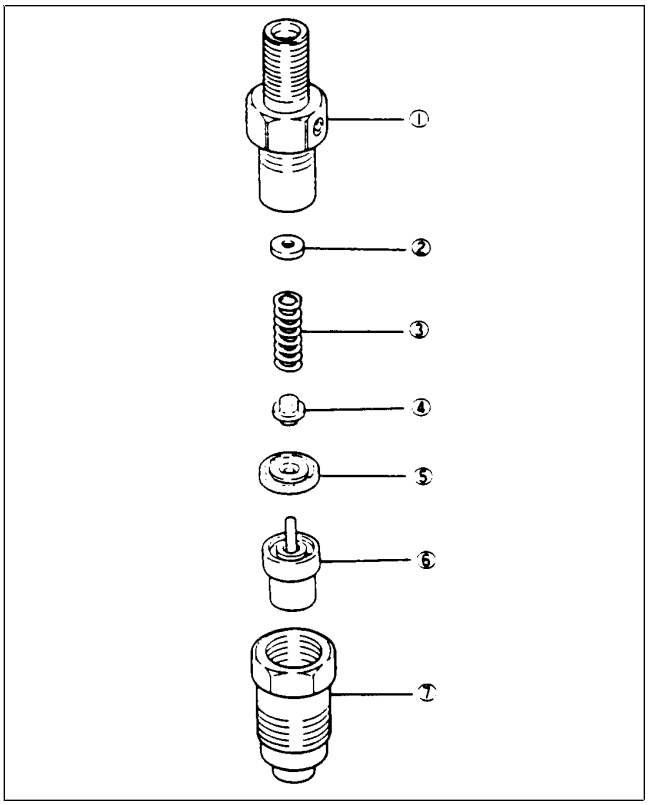

Figure 49

1. Body
2. Shim washer
3. Pressure spring
4. Pin
5. Distance piece
6. Nozzle assembly
7. Retaining nut

Nozzle Inspection and Cleaning

1. Clean the inside and outside of the retaining nut in clean diesel fuel or kerosene to remove carbon or fuel deposits. Inspect the lower seating surface for rust or damage. The sealing area may be restored with emery cloth.

2. Remove carbon or lacquer deposits from the nozzle by cleaning in clean diesel fuel or kerosene. Stubborn deposits can be removed with a brass wire brush.

IMPORTANT: Do not use a steel brush, steel wool, etc. Take special care not to scratch the needle valve in the nozzle assembly.

3. Clean the body, shim, spring, pin and distance piece in clean diesel fuel or kerosene.

4. Inspect the removed parts (Fig. 50). Replace any worn or damaged parts.

Nozzle Assembly and Testing

1. Install the nozzle assembly, distance piece and pin into the retaining nut.

2. Install the shim and pressure spring the body. Assemble the body to the retaining nut. Put the nozzle holder in a vise. Tighten the body and nut to a torque of 3.5 - 4.0 KgM (25 - 29 ft-lb) (Fig. 51).

3. Test the nozzle for proper operation. (See Nozzle Tests in the Testing section of this chapter.)

Nozzle Installation

1. Clean the nozzle holder fitting surface on the cylinder head. Install a new nozzle holder gasket onto the nozzle.

2. Install the nozzle holder into the cylinder head and tighten to a torque of 5.0 - 6.0 KgM (36 - 43 ft-lb).

3. Install the fuel return pipe. Tighten the retaining nut to a torque of 2.5 - 3.0 KgM (18 - 22 ft-lb) (Fig. 49).

4. Install the fuel injection pipes. Tighten the nut to a torque of 2.5 - 3.5 KgM (18 - 25 ft-lb).

5. Bleed air from the fuel system (See Bleeding the Fuel System and Bleeding Air From the Injectors in this section of the book.)

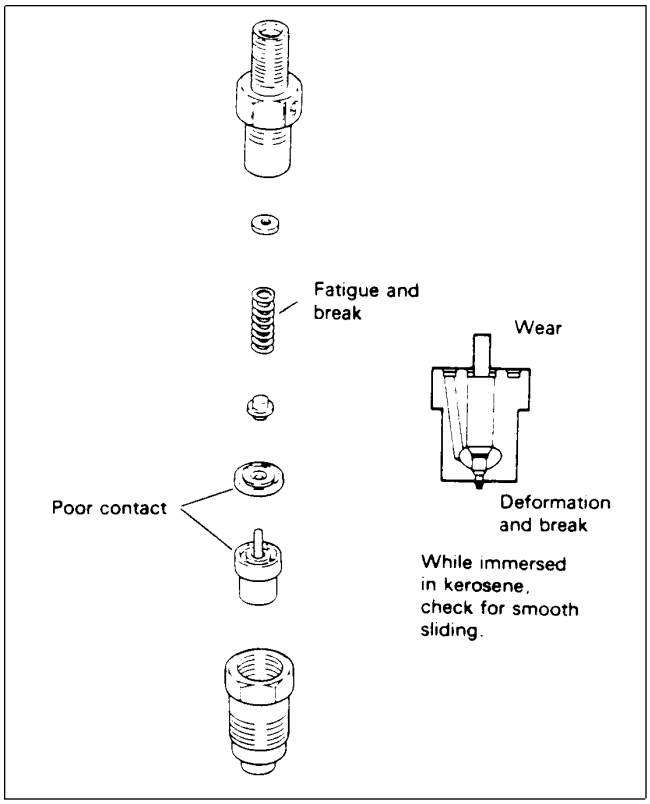

Figure 50

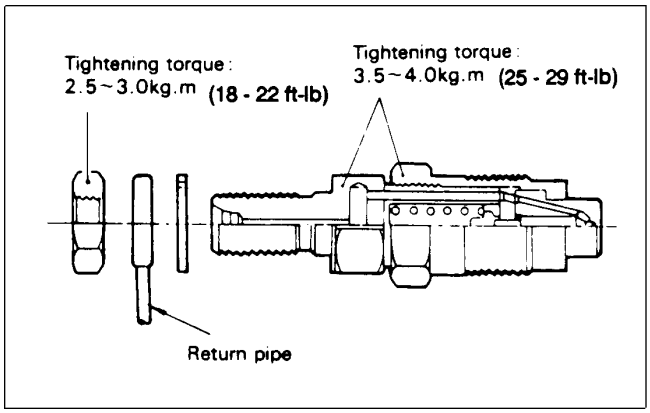

Figure 51

Removing and Installing the Fuel Tank

1. Put machine on a level surface, lower the cutting units, stop the engine, engage the parking brakes and remove the key from the ignition swtich.

2. Open drain fitting on bottom of fuel tank and drain fuel into a suitable container.

3. Remove six capscrews securing the fender to the frame and remove the fender.

4. Disconnect fuel lines from fittings on top of fuel tank.

5. Disconnect electrical wire from fuel gauge sender.

6. Remove three capscrews, flat washers and lock-washers securing fuel tank to frame and remove fuel tank.

7. Reverse steps 2 - 6 to install the fuel tank and tank base. When installing the tank to the frame, tighten the screws to a torque of 30 - 60 in-lb. Do not overtighten.

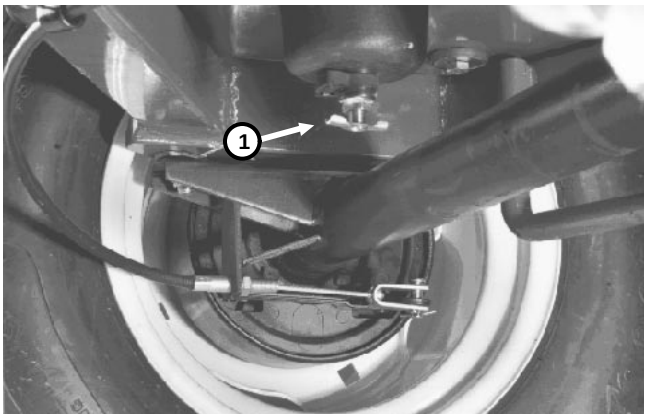

Figure 52

1. Fuel tank drain fitting

Removing and Installing the Engine

Removing the Engine

1. Put machine on a level surface, lower the cutting units, stop the engine, engage the parking brakes and remove key from ignition switch. Allow engine and radiator to cool.

2. Open hood. Disconnect hood stop cable from frame. Lower hood. Remove left and right hinge plates. Lift hood off chassis.

3. Disconnect positive (+) and negative (–) battery cables from battery. Loosen battery securing bolt and remove battery.

4. Remove rear lift arm down pressure springs (see Chapter 8 - Cutting Units).

5. Open radiator cap. Put a drain pan under left side of radiator. Open radiator drain valve and allow coolant to drain into drain pan.

CAUTION

DO NOT open radiator cap or drain coolant if engine or radiator is hot. Pressurized, hot coolant can escape and cause burns.

Ethylene-glycol antifreeze is poisonous. Dispose of it properly or store in a properly labeled container away from children or pets.

6. Loosen hose clamps and disconnect upper and lower radiator hoses from engine and radiator. Lift coolant expansion tank off of bracket.

7. Remove plug from right side cylinder block to drain coolant from engine.

8. Loosen hose clamps and disconnect air intake hose from engine and air cleaner.

9. Remove muffler. Keep muffler bracket on engine.

10. Loosen hose clamp and remove fuel hose from injector pump. Plug end of fuel line to prevent fuel leakage. Loosen hose clamp and remove fuel return hose from rear fuel injector on engine.

11. Disconnect and tag wires that attach to engine or engine components:

- Alternator
- Starter motor and solenoid
- Ground cables
- Oil pressure switch
- Temperature gauge sender
- Thermoswitch
- Engine stop solenoid
- Glow indicator

12. Remove two (2) capscrews and lockwashers to disconnect drive shaft coupler from engine crankshaft pulley.

13. Remove four (4) capscrews, washers and locknuts to remove fan shroud from radiator.

14. Loosen cap screw and nut to disconnect throttle cable from governor lever on engine. Loosen clamp and remove throttle cable and from fan bracket.

15. Remove locknut, flat washer, bolt and rebound washer securing engine to each of four (4) rubber engine mounts.

16. Attach a short section of chain between lifting holes in fan bracket and muffler bracket. Connect hoist or block and tackle chain at center of short section of chain. One person should operate hoist or block and tackle and the other person should help guide engine out of chassis. Remove engine from chassis. Be careful when removing engine to prevent damage to engine, radiator, fan or other parts. Mount engine in an engine rebuilding stand.

17. Remove fan, brackets and accessories from engine as necessary. Drain oil from engine and remove engine oil filter.

Installing the Engine

1. To install the engine, perform steps 2 - 17 of Removing the Engine in reverse order.

2. Install a new engine oil filter. Fill engine with the correct oil. Fill the cooling system with a 50/50 solution of ethylene glycol antifreeze and clean, soft water. Check for oil and coolant leaks and repair as necessary.

3. Adjust throttle linkage (See Throttle Linkage Adjustment in the Adjustments section of this chapter).

Cylinder Head Overhaul

Cylinder Head Removal

1. If the engine will not be removed from the traction unit, lower the coolant level in the engine. Loosen the hose clamp and remove the upper radiator hose from the thermostat housing. Disconnect the coolant bypass hose from the thermostat housing.

2. Remove plug from left side of cylinder block to drain the coolant from head and cylinder block.

3. Remove the muffler.

4. Remove the alternator (see Alternator Removal and Installation in the External Engine Component Repair section of this chapter).

5. Remove the glow plug lead wires.

6. Remove the fuel injection pipes and return pipe.

7. Remove the rocker cover and gasket.

8. Loosen the rocker stay attaching bolts. Remove the rocker assembly (Fig. 59).

9. Loosen the cylinder head bolts. Use the sequence shown in Figure 60. Remove the cylinder head assembly including the intake and exhaust manifolds.

10. Remove the cylinder head gasket. Use a scraper tool to remove the cylinder head gasket from the cylinder head and cylinder block. Make sure all of the gasket material is removed. Do not damage or scratch the cylinder head or cylinder block surfaces.

11. Remove the intake and exhaust manifolds from the cylinder head. Remove thermostat housing and thermostat.

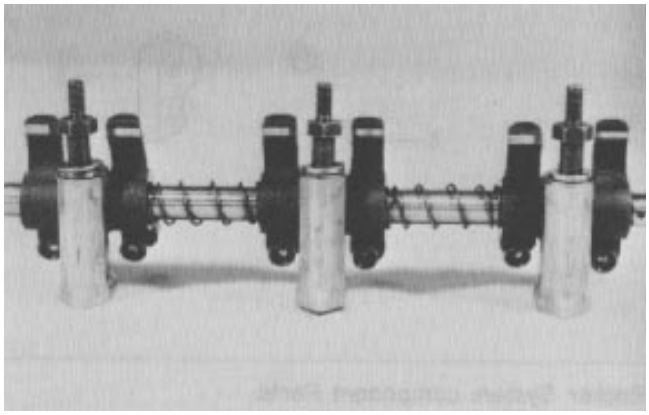

Figure 59

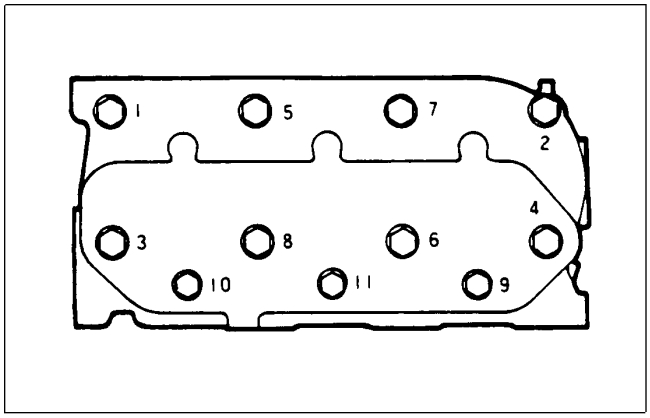

Figure 60

Cylinder Head Service

1. Use a valve lifter tool to compress the valve spring (Fig. 61). To remove each valve retainer, depress the retainer against the valve spring and remove the retainer lock (Fig. 62). Remove the valve retainer, spring and valve. Keep each valve and other parts for each cylinder separate so they can be reinstalled in the same cylinder.

2. Examine each valve for burning, pitting, heavy carbon deposits or wear. The condition of the valves can give important information about other components that may require service (example: improper valve clearance, worn valve guides, damaged seals, etc.). Remove the valve seals.

3. Inspect the cylinder head for coolant leaks or damage before cleaning.

4. Remove all of the carbon deposits from the combustion chamber using a scraper and wire brush.

5. Clean the cylinder head thoroughly with solvent or degreasing solution and allow it to dry. Inspect carefully for cracks.

6. Remove all carbon deposits from the valve guide bores with a valve guide cleaner. Use a valve guide bristle brush to remove loosened carbon deposits in the valve guide. Push a solvent soaked cloth through the valve guides to remove all foreign material.

7. Use compressed air to clean out the oil passages. Make sure the oil passages are not plugged.

CAUTION

Warn other personnel in the area before using compressed air. To prevent injury, wear safety glasses, goggles or a face shield.

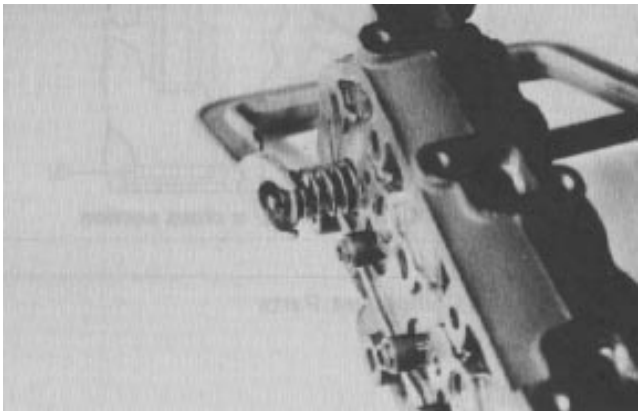

Figure 61

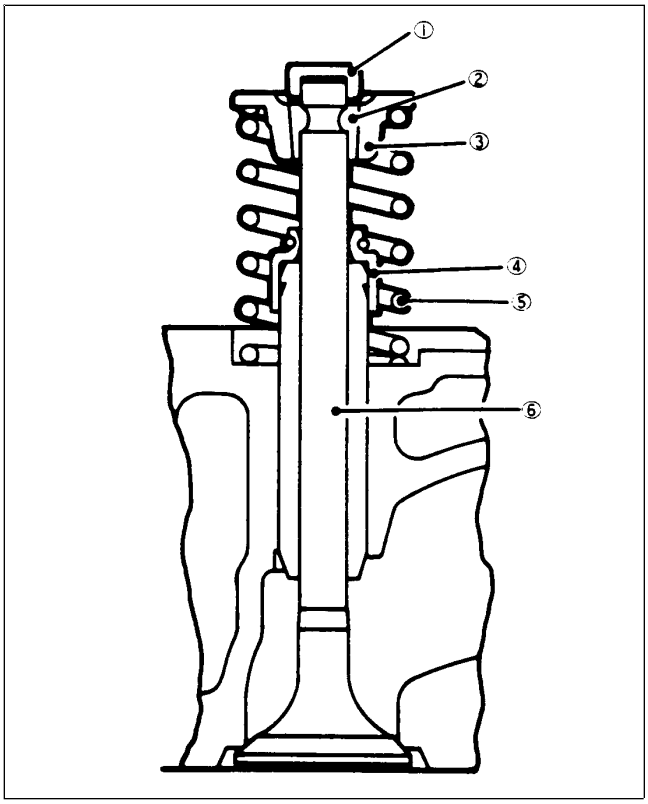

Figure 62

1. Valve stem cap
2. Retainer lock
3. Valve spring retainer
4. Valve stem seal
5. Valve spring
6. Valve

8. Use a straight edge and feeler gauge to check the flatness of the cylinder head lower surface (Fig. 63). Be sure to check the surface variation crosswise, lengthwise, and diagonally. If the variation in surface flatness exceeds (0.05 mm) 0.002 in. , the cylinder head or cylinder block must be replaced or resurfaced.

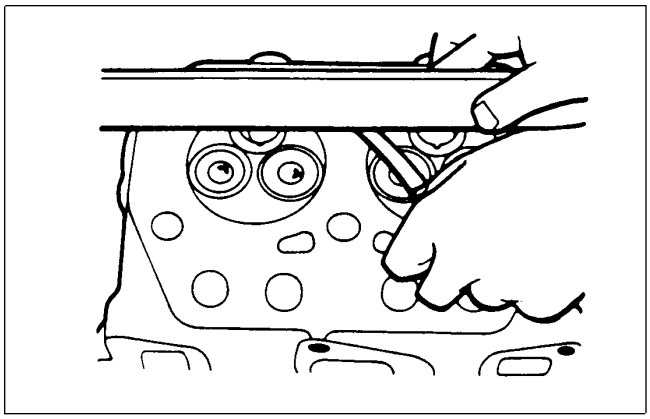

Figure 63

Valve Guides

1. Use a micrometer and a small hole gauge to check the valve guide to valve stem clearance. The valve and valve guide should be replaced if the clearance exceeds the following limits:

Valve guide to valve stem clearance

Intake valve: 0.10 mm (0.004 in.)
Exhaust valve: 0.15 mm (0.006 in.)

2. Use a valve guide removing mandrel with a pilot section to remove the valve guide. Push the valve guide up from the bottom of the cylinder head.

3. To install the new valve guide press it in from the top of the cylinder head, using the valve guide mandrel. Install the valve guide so the installed height is 13.5 - 14.5 mm (0.531 - 0.571 in.) above the cylinder head (Fig. 64).

4. After installing the new valve guide, check the valve guide to stem clearance. If the clearance is smaller than standard, it will be necessary to ream the valve guide bore to get the proper clearance.

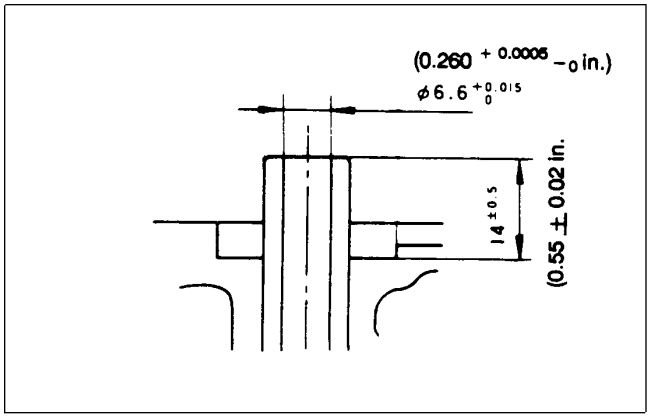

Figure 64

Valves

1. Carefully clean each valve with a wire wheel to remove all carbon deposits.

2. Check the valve face and valve stem for excessive wear, damage, cracks or deformation. If any of these conditions exist, the valve must be replaced. It is possible to reface the valve if the valve head thickness (margin width) is not less than the service limit (Fig.65). If the margin of the resurfaced valve is less than the service limit, replace the valve.

Minimum valve head thickness (margin width):
0.5 mm (0.020 in.)

3. Check the tip of the valve stem for wear or pitting. Replace the valve if the tip is worn.

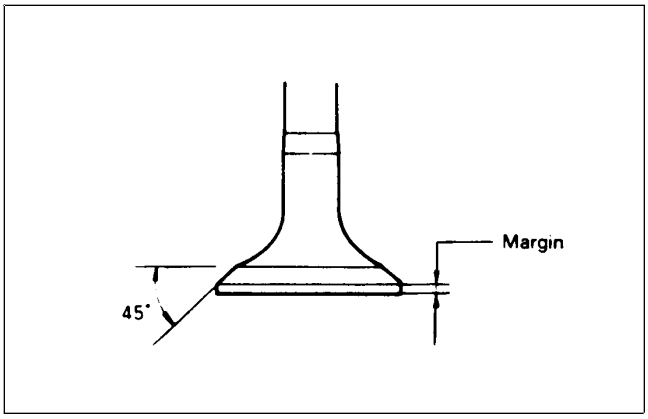

Figure 65

Valve Seats

1. Check the valve seats for damage and indications of incorrect contact (Fig. 66).

Maximum valve sinkage: 1.5 mm (0.06 in.)

2. The valve seat can be resurfaced (Fig. 67). Resurface the valve seat so it contacts the mid-portion of the valve face.

3. After cutting new valve seats, use lapping compound to lap the valve to the seat. After lapping, thoroughly clean the valve seat and valve areas to remove any traces of lapping compound.

4. Put a light coat of Prussion blue dye on the valve seat area. Install the valve. Hold the valve down and rotate it 1/4 turn, then turn the valve back to the original position. Remove the valve and examine the valve seat. The valve seat should show an even wear pattern from contact with the valve. Examine the valve. The dye should be evenly distributed around the valve and in the center of the valve face.

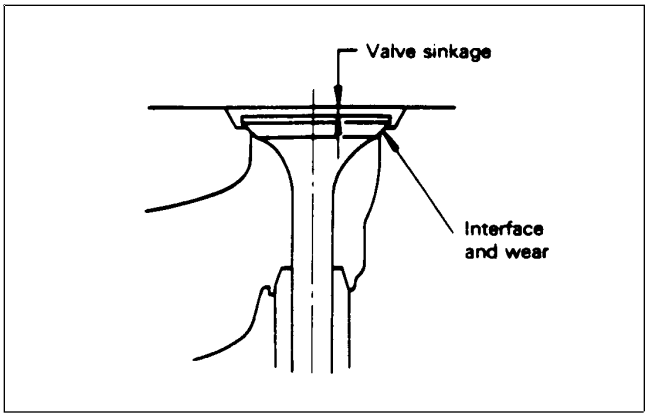

Figure 66

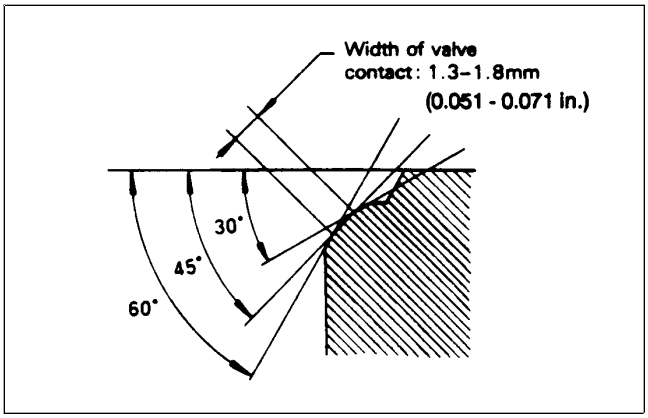

Figure 67

Valve Springs

1. Check the valve springs for rust, pitting, cracks or other damage.

2. Check the squareness of the valve spring by putting it upright on a level surface. Any spring that is 3^{0} or more out of square must be replaced.

3. Measure the spring free length. Any spring that has a free length of 39.3 mm (1.55 in.) or less must be replaced.

4. Over a period of time, valve springs can lose some of their tension. The spring must be replaced if the tension is less than the service limit. (Fig. 68)

Minimum Installed Load/Height

(IN) 5.05 kg / 35.5 mm (11 lb. / 1.4 in.)
(EX) 12.61 kg / 28 mm (27 lb. / 1.1 in.)

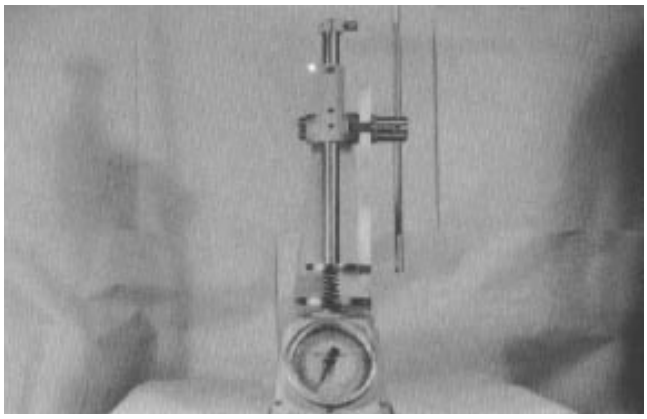

Figure 68

Rocker Arm and Rocker Shaft

1. Remove the snap ring on each end of the rocker shaft. Remove the rocker arm stay bolts. Remove rocker arm stays, spring and rocker arms from the shaft (Fig. 69).

2. Inspect each rocker arm for wear at the valve tip and push rod contact surfaces. Replace any worn or damaged rocker arms.

3. Inspect the rocker shaft for wear or damage. Replace the rocker shaft if it is worn or damaged.

4. Measure the rocker arm inside diameter and the shaft outside diameter. Replace the shaft if the rocker arm to shaft clearance is more than 0.02 mm (0.008 in.).

5. Make sure the oil passages in the rocker shaft and rocker arms are open. Clean if necessary.

IMPORTANT: When assembling the rocker assembly, make sure the identification mark (small drilled hole near the end of the shaft) is at the front and facing the valve side.

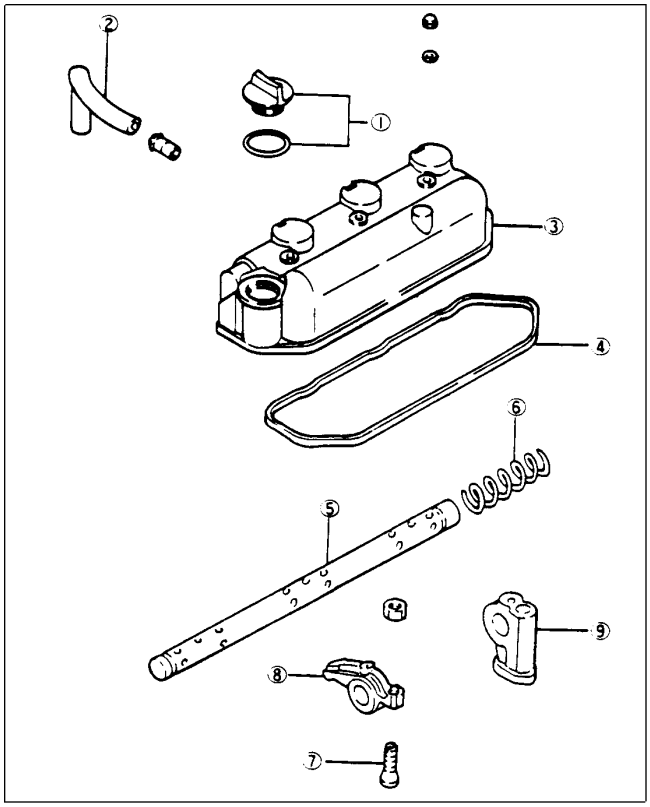

Figure 69

1. Oil filler cap
2. Breather hose
3. Rocker cover
4. Rocker cover gasket
5. Rocker shaft
6. Rocker spring
7. Adjusting screw
8. Rocker arm
9. Rocker stay

Cylinder Head Assembly and Installation

1. Install the thermostat housing. Use a new gasket.

2. Install the intake and exhaust manifolds. Use new gaskets.

3. Make sure the valve guides are properly installed (Fig. 64).

4. Install new valve stem seals onto the valve guides (Fig. 70). DO NOT install used seals.

5. Apply a coating of oil to the valve stems and insert them in proper order, into the valve guides. Install the valve springs and valve retainers. Compress the spring with a valve lifter, then install the retainer lock.

IMPORTANT: Be careful not to damage the spring and stem seal by over compressing the spring during installation.

6. Install the nozzle holders in the cylinder head and tighten to a torque of 5.0 - 6.0 KgM (36 - 43 ft-lb).

7. Install the glow plugs in the cylinder head and tighten to a torque of 5.0 - 6.0 KgM (36 - 43 ft-lb).

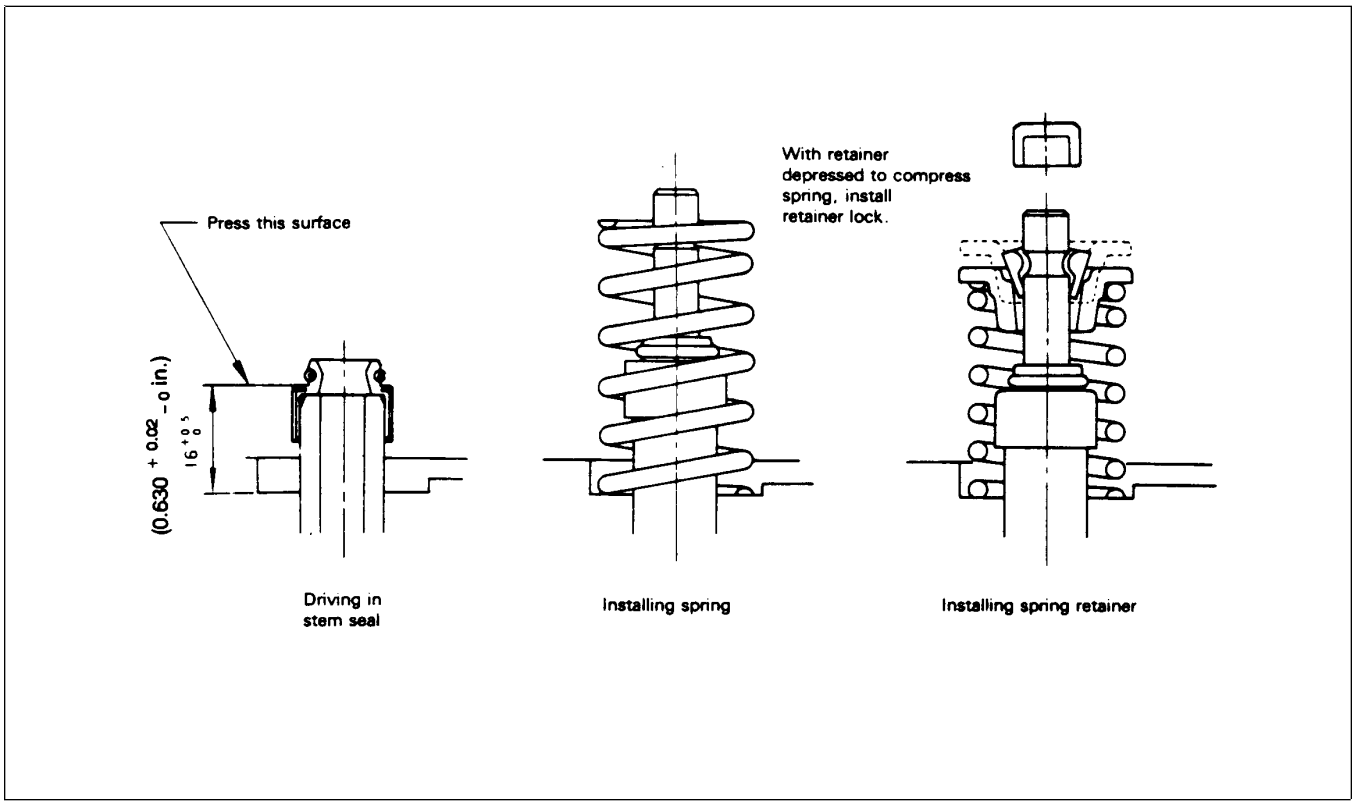

Figure 70

8. Make sure that the cylinder head and cylinder block surfaces are clean. Put a new gasket on the cylinder head. Insert dowel pins into two cylinder head bolt holes to assist in mounting the head onto the block. Carefully put the cylinder head into position on the cylinder block. Remove the dowel pins. Insert the cylinder head bolts.

IMPORTANT: Do not put any sealant on the cylinder head gasket.

9. Tighten the cylinder head bolts in the order shown in Figure 71. Tighten the bolts to approximately one-third the specified torque, then two-thirds and finally to the final specified torque.

M10 head bolt torque: 7.5 - 8.5 KgM (54 - 62 ft-lb)
M8 head bolt torque: 2.0 - 3.0 KgM (15 - 22 ft-lb)

10. Install the fuel return pipe. Install the fuel delivery pipes. When tightening the nut on each end of the pipe hold the delivery valve holder or nozzle holder with a wrench to prevent turning.

11. Apply engine oil to the inside surface of the rocker arm bushings. Install the rocker arms, spring and rocker arm stays on the rocker shaft. Install the rocker shaft so the identification mark (small drilled hole near the end of the shaft) is at the front and facing the valve side. Install the bolts through each stay and into the shaft. Install the snap ring on each end of the shaft.

12. Install the rocker arm and shaft assembly on the cylinder head. Tighten the rocker arm stay bolts to a torque of 1.5 - 2.2 KgM (11 - 16 ft-lb)

13. Adjust the valve clearance. (See Checking and Adjusting Valve Clearance in the Adjustments section of this chapter.)

14. Install the rocker cover and gasket. Install the breather hose to the rocker cover and intake manifold.

15. Install the glow plug lead wires.

16. Install the alternator.

17. Install the muffler.

18. Install the upper radiator hose and tighten the hose clamps. Install the coolant bypass hose to the thermostat housing and tighten the hose clamps.

19. Fill the cooling system with a 50/50 solution of ethylene glycol antifreeze and clean, soft water. Check for oil and coolant leaks and repair as necessary.

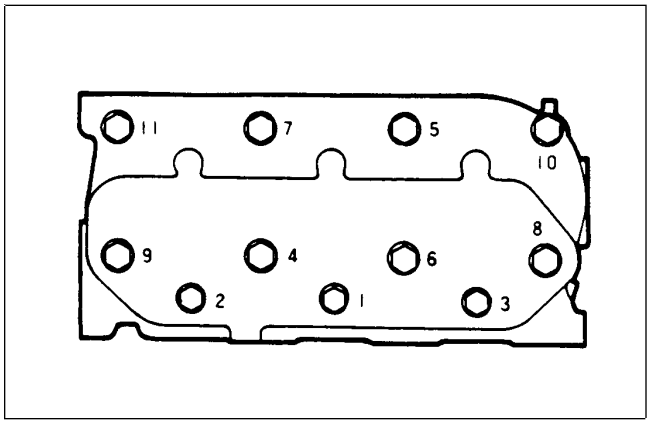

Figure 71

Cylinder Block Overhaul

NOTE: The engine must be removed from the traction unit chassis and put in an engine stand. (See the Removing and Installing The Engine section of this chapter.)

Gear Case and Oil Pump

1. Remove the crankshaft pulley.

2. Remove the fuel injection pump. (See Injection Pump Service in the Fuel System Repairs section of this chapter.)

3. Disconnect the governor spring from the tension lever. Remove the governor cover assembly from the gear case. (See the Governor System Repairs section of this chapter.)

4. Remove the water pump. (See Water Pump Service in the External Engine Component Repair section of this chapter.)

5. Remove the alternator. (See Alternator Removal and Installation in the External Engine Component Repair section of this chapter.)

6. Remove the gear case assembly (Fig. 72).

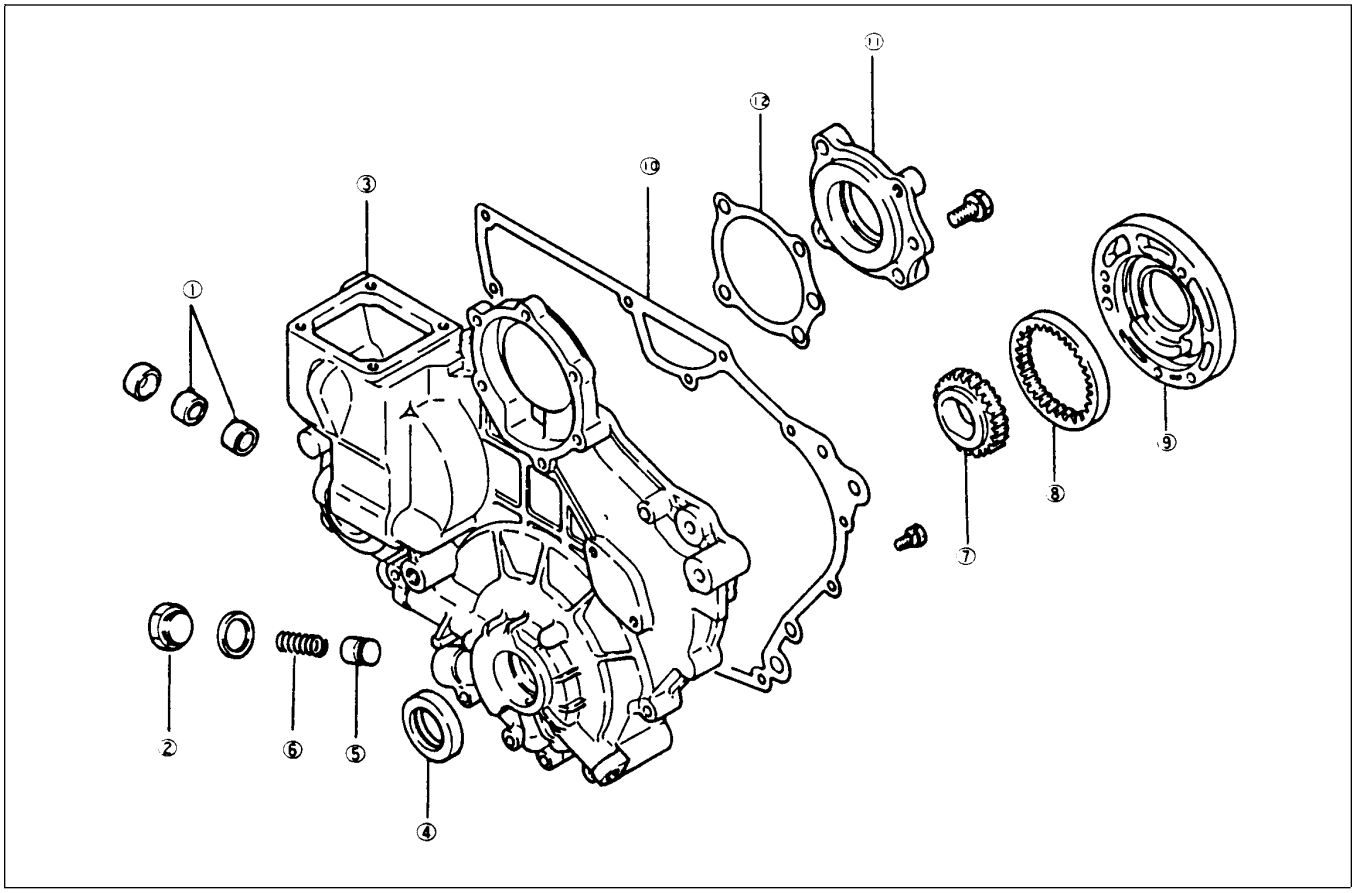

Figure 72

1. Bushings
2. Plug
3. Gear case
4. Front oil seal
5. Relief plunger
6. Relief spring
7. Oil pump inner gear
8. Oil pump outer gear
9. Oil pump housing
10. Gear case gasket
11. High pressure pump gear housing
12. Housing gasket

7. Check removed parts for wear or damage (Fig. 73).
Replace parts as necessary.

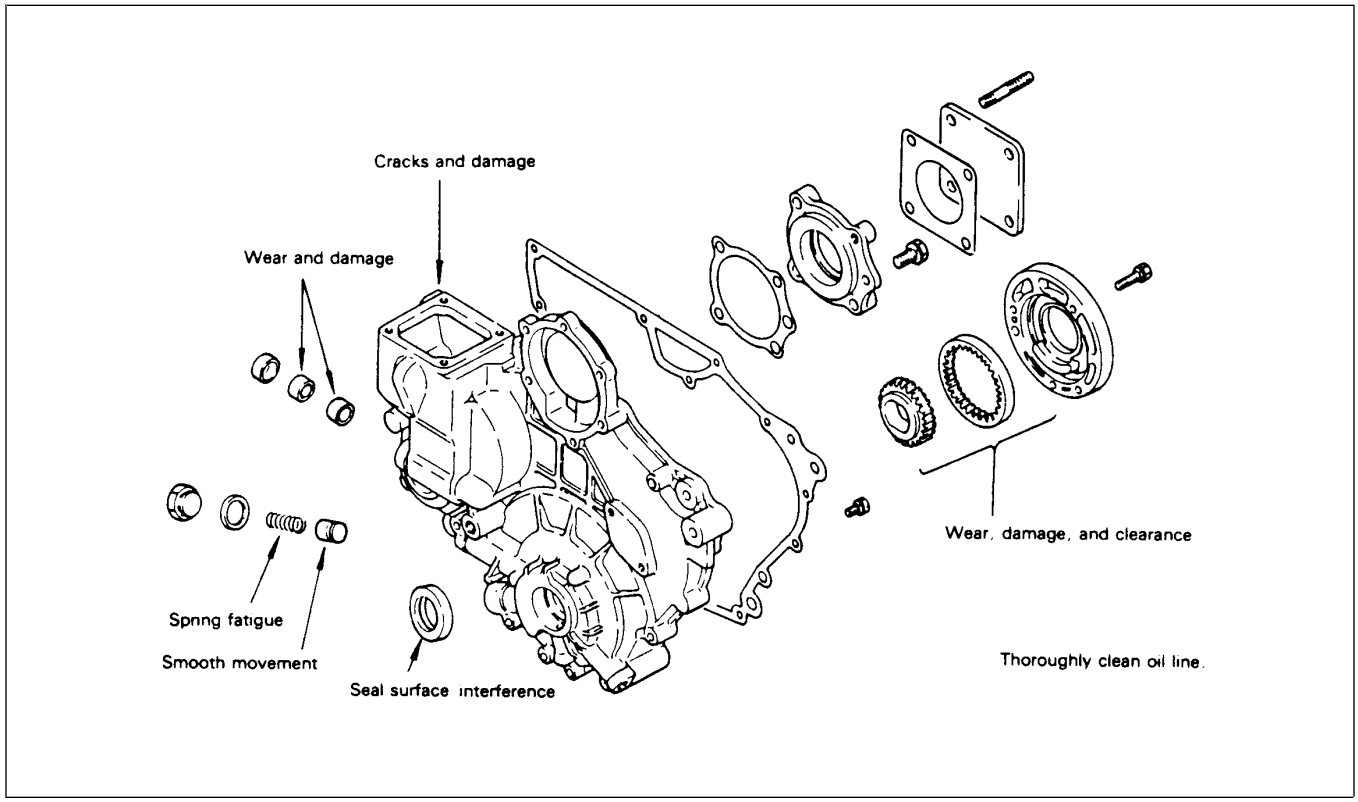

Figure 73

8. Check the governor parts for wear or damage (Fig 74). Replace parts as necessary.

A. Remove the expansion plug (Fig 75). Be careful to not scratch the gear case.

B. Pull out the grooved pin.

C. Remove the shaft, spring and levers.

D. If necessary replace the governor bushings (Fig. 76).

E. Install the shaft, spring and levers. Press fit the expansion plug into the hole in the gear case.

9. Reverse steps 1 - 6 to reassemble the gear case. Use new gaskets when assembling the gear case.

IMPORTANT: Install a new front oil seal before installing the gear case. Apply a thin coat of oil to the circumference and lip of the oil seal.

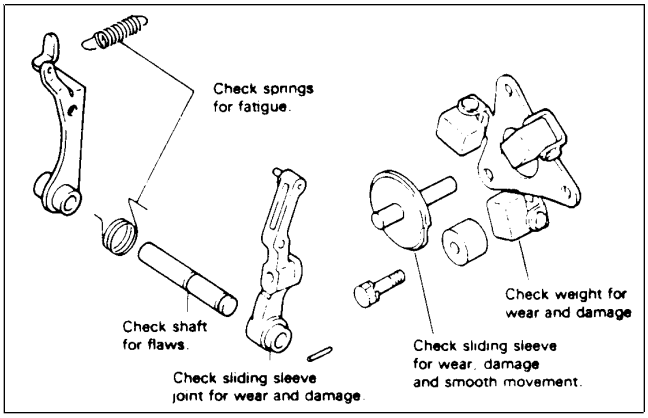

Figure 74

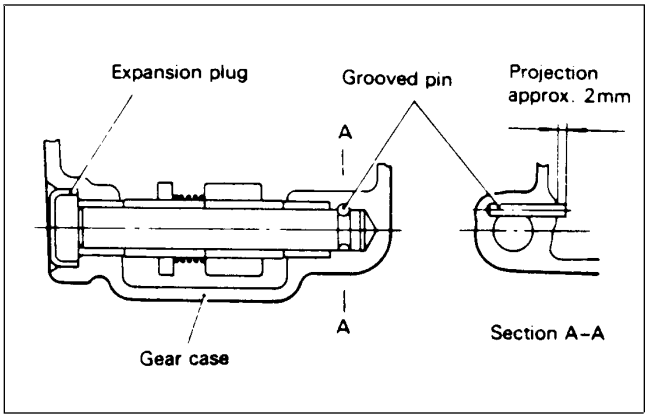

Figure 75

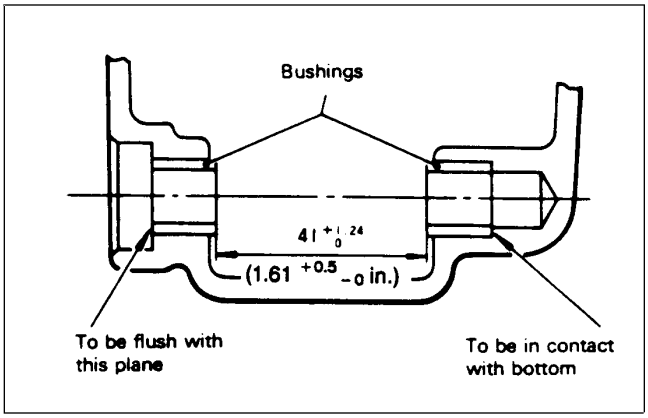

Figure 76

Timing Gears and Camshafts

1. Remove the cylinder head (see Cylinder Head Removal in the Cylinder Head Overhaul section of this chapter).

2. Remove the gear case (see Gear Case and Oil Pump in this section).

3. Remove the snap ring and remove the idle gear (Fig. 77).

4. To remove the injection pump camshaft:

   A. Remove the governor weight assembly (Fig. 33).

   B. Remove camshaft rear cover.

   C. Remove the stopper bolt (Fig. 78).

   D. Pull out the camshaft from the front of the cylinder block.

5. To remove the valve camshaft:

   A. Pull the push rods and tappets out of the cylinder block.

   B. Remove the camshaft stopper bolt.

   C. Pull the camshaft out of the cylinder block (Fig 79).

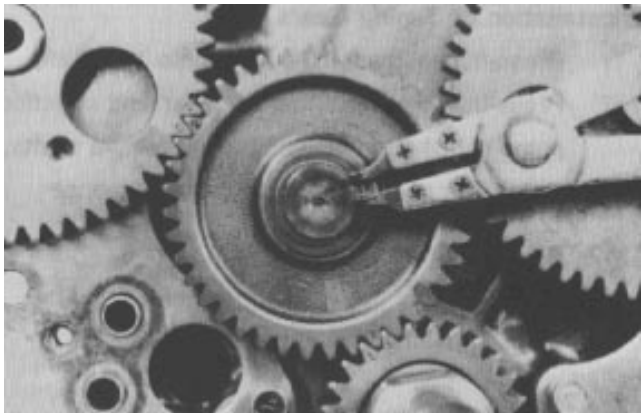

Figure 77

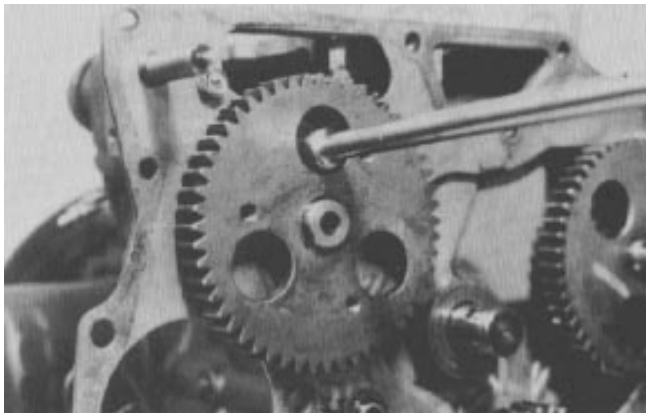

Figure 78

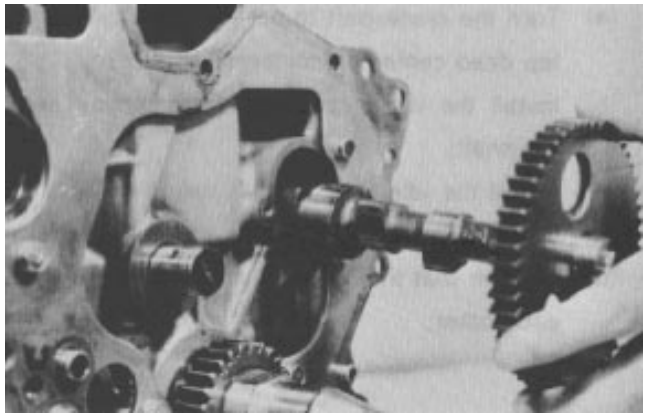

Figure 79

6. Check the gears for incorrect tooth contact, wear and damage. Replace any gears that are badly worn or damaged.

Maximum idle gear bushing to shaft clearance:
0.2 mm (0.008 in.)

Maximum backlash between gears in mesh:
0.3 mm (0.012 in.)

7. Inspect the camshaft parts (Fig. 80). Replace any parts that are worn or damaged.

Major diameter of cam:
Injection pump cam: 29.3 - 30 mm (1.154 - 1.181 in.)
Valve cam: 26.37 - 27.37 mm (1.038 - 1.078 in.)

Push rod bend: within 0.3 mm (0.012 in.)

Tappet to cylinder block hole clearance:
0.15 mm (0.006 in.) maximum

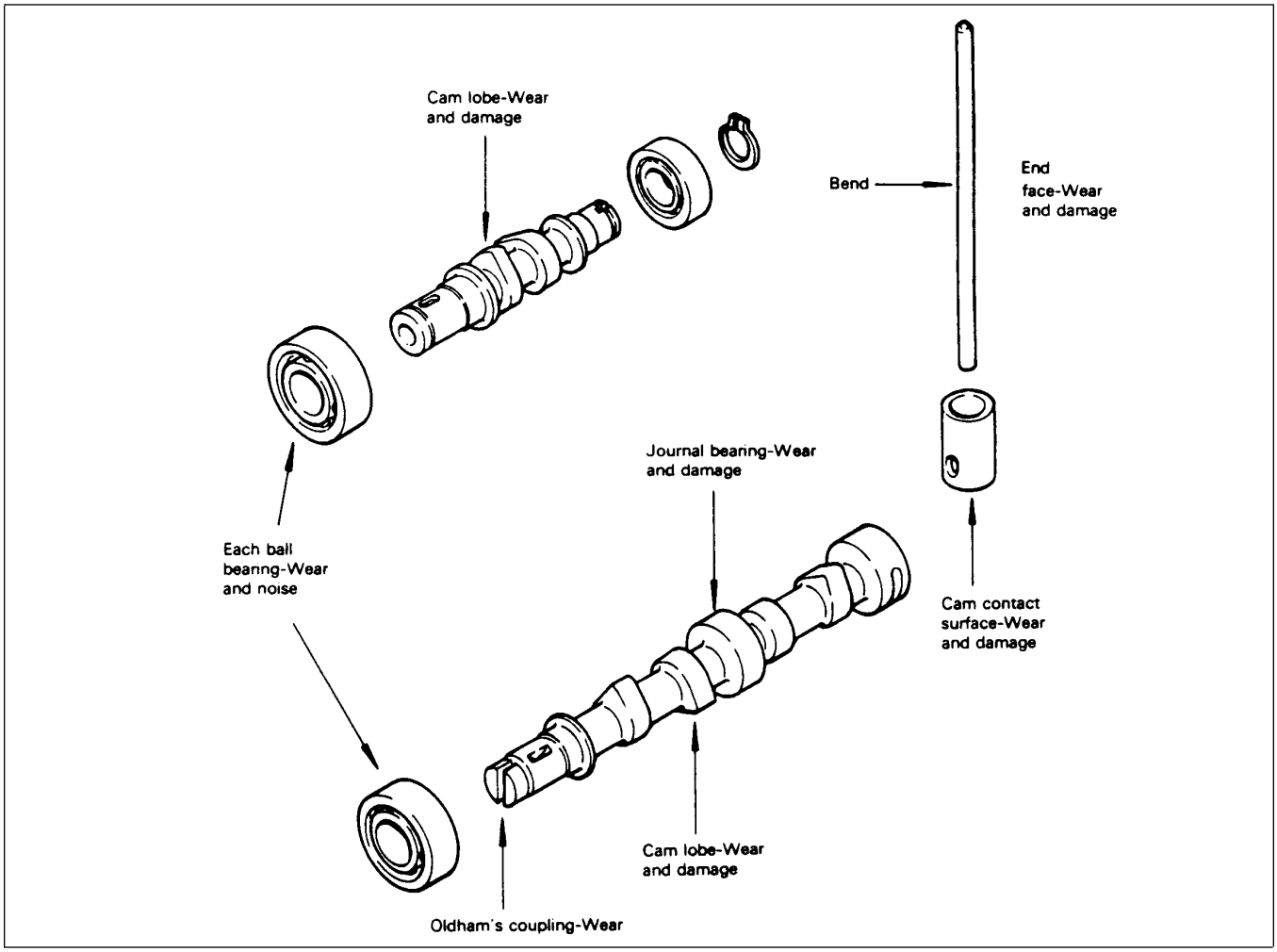

Figure 80

8. Before installing the camshafts and timing gears, turn the crankshaft to set the No. 1 cylinder to top dead center (TDC) of the compression stroke. Reverse steps 1 - 5 to install the camshafts and timing gears (Fig. 81).

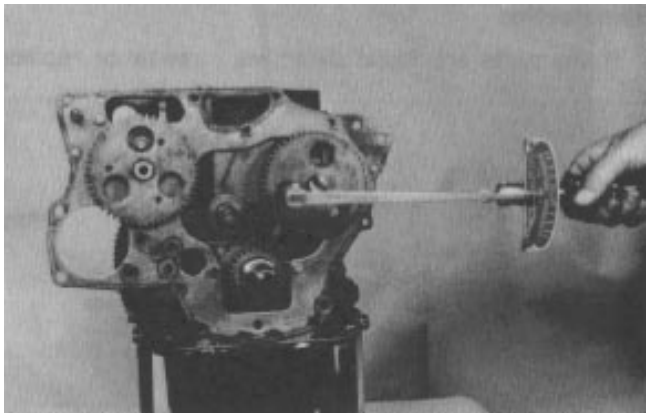

Figure 81

9. With the crankshaft set to No. 1 cylinder TDC, install the idle gear so the timing marks on all the gears are in alignment (Fig. 82).

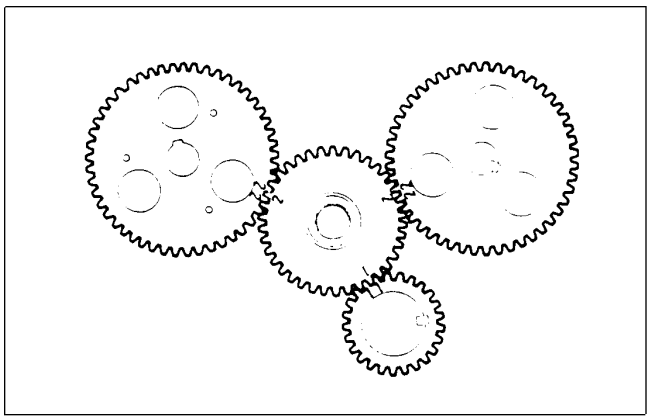

Figure 82

Piston and Connecting Rod

1. Remove the cylinder head (see Cylinder Head Removal in the Cylinder Head Overhaul section of this chapter).

2. Remove the oil pan and gasket.

3. Remove the oil screen

NOTE: Before removing the pistons, mark the number of the cylinder onto the top of each piston and on the side face of each connecting rod (on the large end). When the piston and connecting rod is removed be careful to prevent damage to the piston or bearing surfaces.

4. Use a ridge removing tool to remove the ring ridge from each cylinders. This will prevent damage to the rings and pistons.

5. Remove the connecting rod end caps and bearings (Fig 83). Keep these parts in cylinder number order so they can be reinstalled in the same cylinder. Use a wood block to push the pistons and connecting rods up out from the bottom of the block. Take care not to scratch the crankshaft pin and cylinder.

6. Check each piston for wear, signs of seizure or nicks. Replace the piston if it is damaged.

7. Thoroughly clean the carbon deposits from the piston and ring grooves. A ring groove cleaner, or piece of discarded ring may be used to clean the ring grooves.

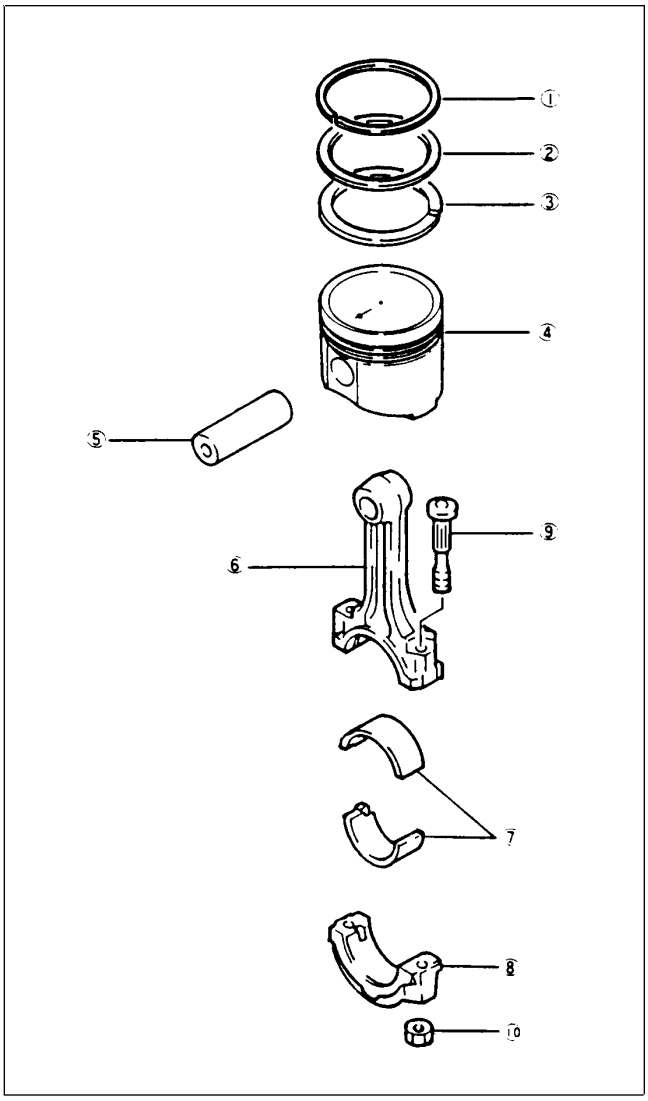

Figure 83

1. Piston ring No. 1
2. Piston ring No. 2
3. Oil ring
4. Piston
5. Piston pin
6. Connecting rod
7. Connecting rod bearing
8. Connecting rod cap
9. Connecting rod bolt
10. Connecting rod nut

8. Measure the piston outside diameter (Fig. 84). (See Cylinder Block in this section).

Maximum piston to cylinder wall clearance:
0.3 mm (0.012 in.)

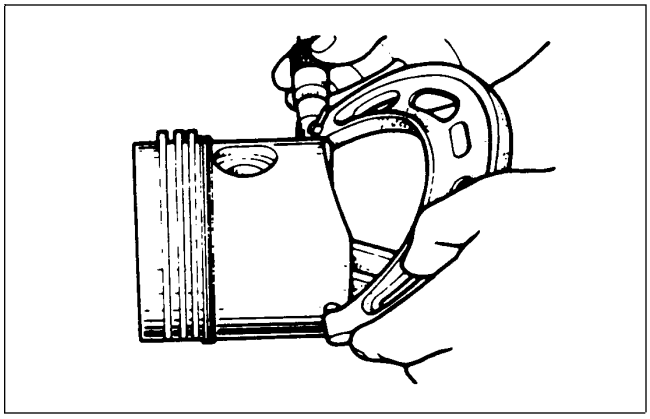

Figure 84

9. Use a thickness gauge to check the piston ring side clearance (Fig. 85).

If the piston ring side clearance exceeds the service limit, the ring must be replaced. If the clearance still does not meet specifications with a new ring the piston must be replaced. (See the Specifications section of this chapter.)

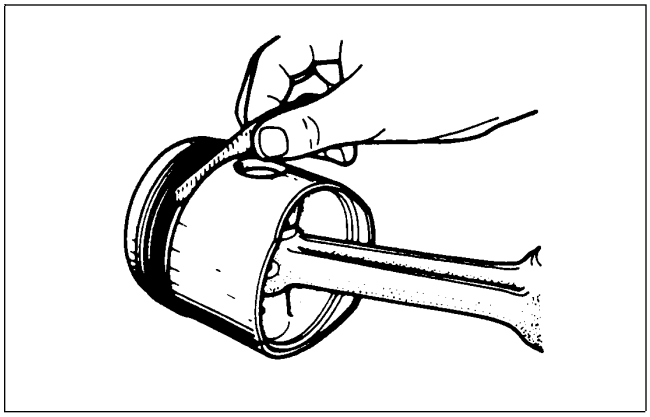

Figure 85

10. Measure the piston ring end gap. Insert the ring into the least worn area of the cylinder by pushing it into place with the piston (Fig. 86). If the gap exceeds 1.5 mm (0.060 in.) the ring must be replaced.

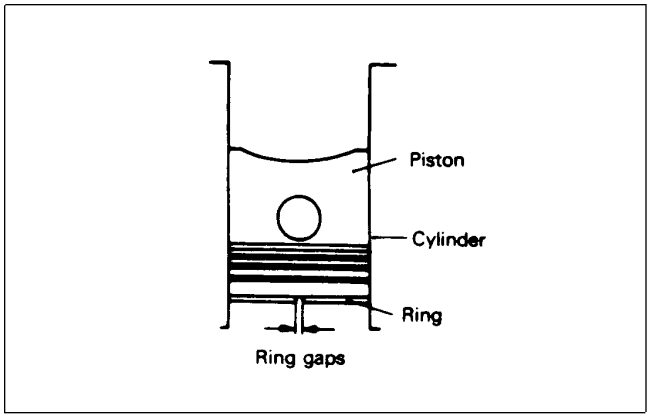

Figure 86

11. To remove the piston from the connecting rod press the piston pin from each piston. Use the piston setting tool (Fig. 87).

IMPORTANT: Do not attempt to remove the piston pins by driving then out with a hammer. A stuck piston pin, requiring excessive pressure to remove, should be replaced.

12. Check for bending or distortion of the connecting rod. The service limit for bend and distortion is 0.15 mm (0.006 in.). Replace the connecting rod if damaged or out of specification.

13. To assemble the piston to the connecting rod, press the piston pin into the set position. Use the piston pin setting tool (Fig. 88). Make sure the identification mark of the rod and the arrow mark on the piston head are directed up.

Pin press fitting force: 500 - 1500 kg (1100 - 3300 lb.)

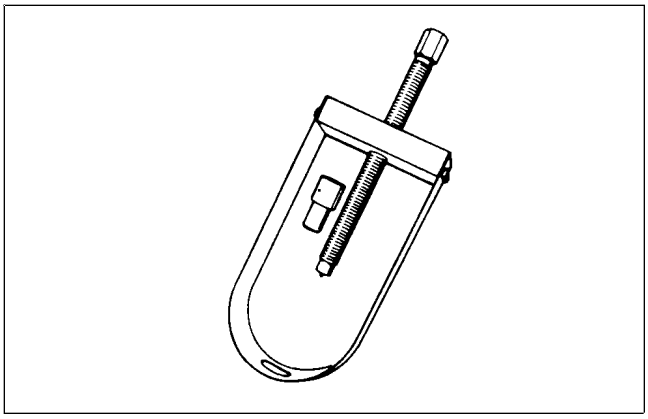

Figure 87

14. Assemble each connecting rod and bearing to the crankshaft in proper order. Use a feeler gauge to measure the side clearance between the connecting rod end and crankshaft (Fig. 89). Replace the connecting rod assembloy if the side clearance is more than the specified amount.

Maximum connecting rod side clearance: 0.5 mm (0.02 in.)

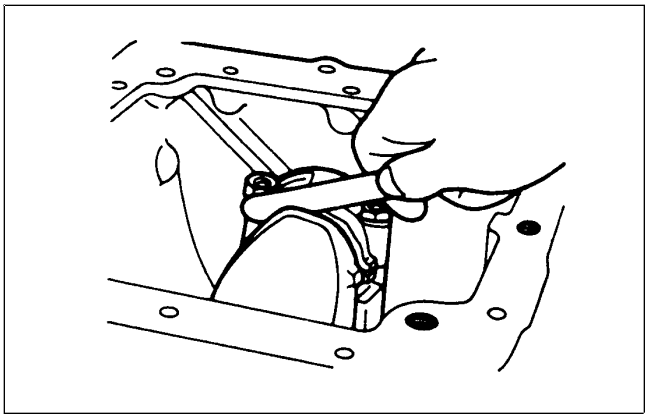

Figure 89

15.Install the piston rings. Each piston ring has different shape. Make sure they are installed in the proper position and with the ring gaps in the directions as illustrated (Fig. 90).

16. Insert the piston and connecting rod assembly into the cylinder block using a ring compressor and a wooden block. Make sure the arrow mark on top of the piston is facing toward the front of the engine.

17. Install the connecting rod bearings and end caps. Make sure the notches on the bearings and connecting rod are aligned. Tighten the end cap retaining bolts to a torque of 3.2 - 3.5 KgM (23 - 25 ft-lb).

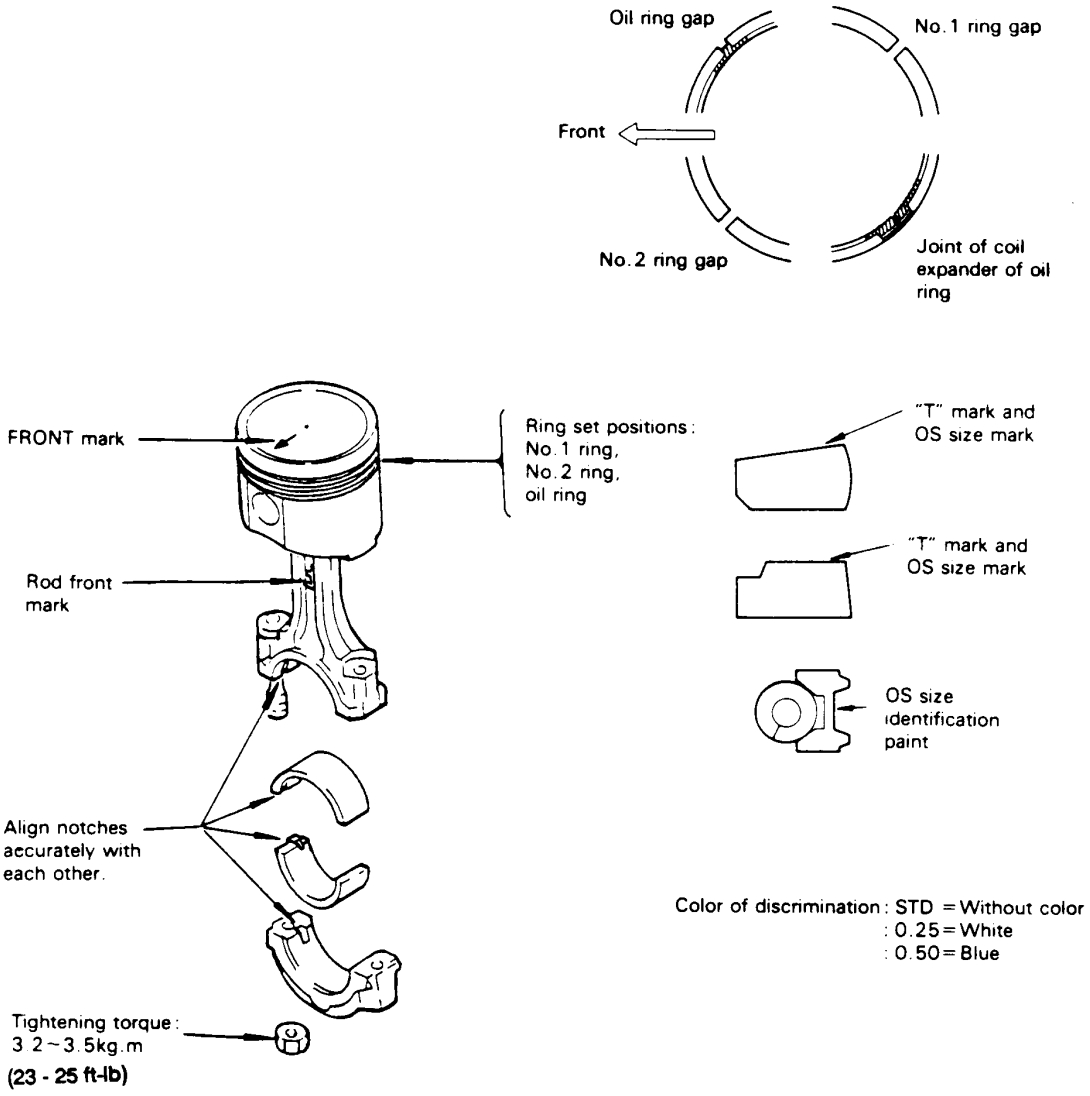

Figure 90

Crankshaft

1. Perform steps 1 - 5 under Piston and Connecting Rod in this section.

2. Remove the flywheel.

3. Remove the rear oil seal case.

4. Remove the main bearing caps (Fig. 91). Keep each set of bearings together with its bearing cap.

5. Remove the crankshaft.

6. Inspect the removed parts. Repair or replace any worn or damaged parts (Fig. 92).

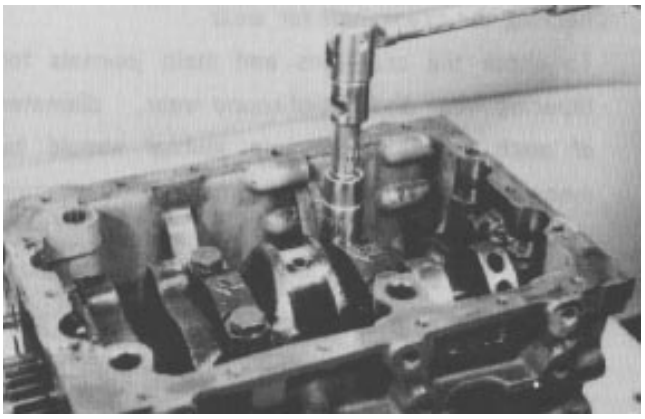

Figure 91

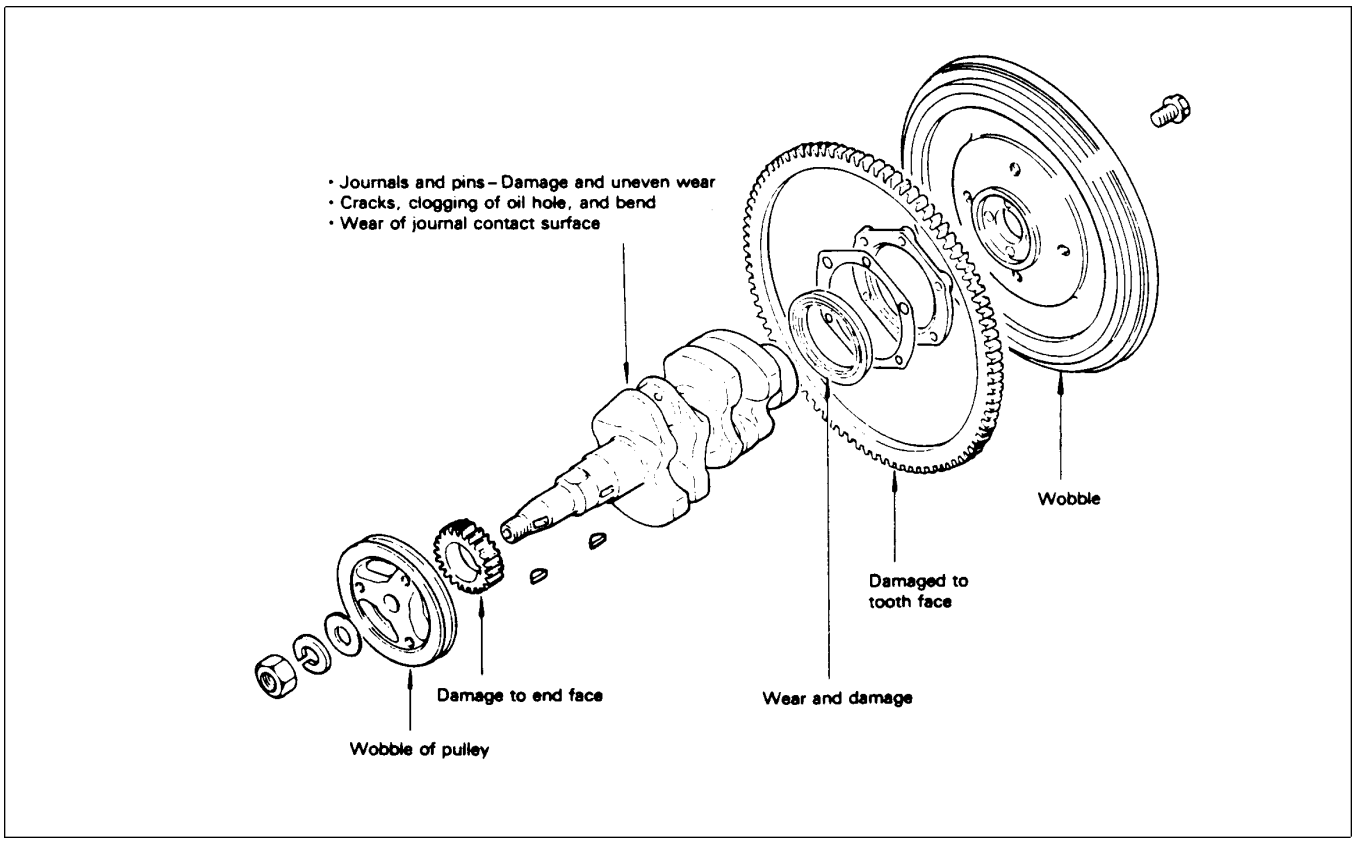

Figure 92

6. Measure the crankshaft for “run-out” (bend). Mount the crankshaft in a pair of V-blocks (or live centers) and use a dial indicator to measure the run-out in the crankshaft (Fig. 103). The maximum allowable crankshaft run-out is 0.05 mm (0.002 in.).

7. Check the crank journals and crankpins for damage, out of round wear or tapering wear. The diameter of each crankpin or main journal should be measured at two places, “1" and ”2", in two directions, “A” and “B” (Fig. 104).

Main journal diameter: 42.3 mm (1.665 in.) minimum
Crankpin diameter: 39.3 mm (1.547 in.) minimum

8. Check the crankshaft oil clearance. Oil clearance is calculated by subtracting the diameter of the main journal or crankpin from the inside diameter of the main bearing or rod bearing. The inside diameter of each crankpin or main journal should be measured at two places, “1" and ”2", in two directions, “A” and “B” (Fig. 105) after the bearing cap is installed at the proper torque. If the oil clearance exceeds the service limits, install a new bearing. If installing the new bearing does not reduce the clearance to within service limits, the crankshaft must be reground and oversize bearings installed.

Tightening Torque:
Main bearing cap bolt 5.0 - 5.5 KgM (23 - 25 ft-lb)
Rod bearing cap nut 3.2 - 3.5 KgM (36 - 40 ft-lb)

Crankpin oil clearance: 0.15 mm (0.006 in.)
Journal oil clearance: 0.10 mm (0.004 in.)

NOTE: If using Plastigauge to measure the oil clearance, put a piece of Plastigauge onto the crankpin or journal, and tighten the bearing cap (with bearing) in place. DO NOT rotate connecting rod or crankshaft when the Plastigauge is in place. Rotating will destroy the Plastigauge. Remove the bearing cap and measure the width of the Plastigauge to determine the clearance. If the oil clearance exceeds the service limits, install a new bearing. If installing the new bearing does not reduce the clearance to within service limits, the crankshaft must be reground and oversize bearings installed.

9. To install a new oil seal, pry the seal out with a screwdriver and drive a new seal into the oil seal case.

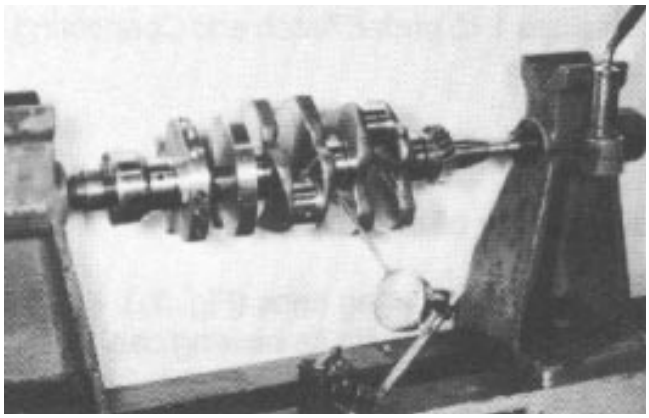

Figure 93

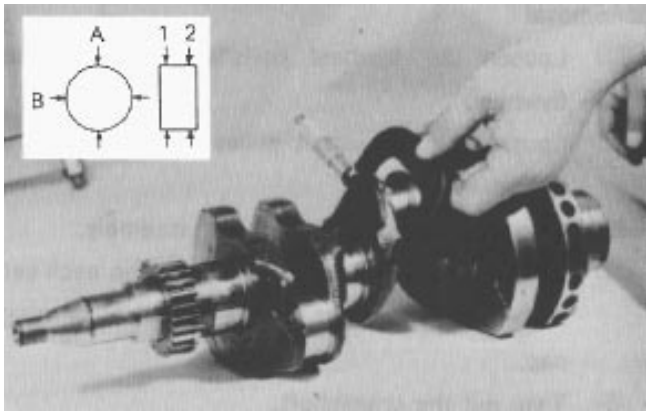

Figure 94

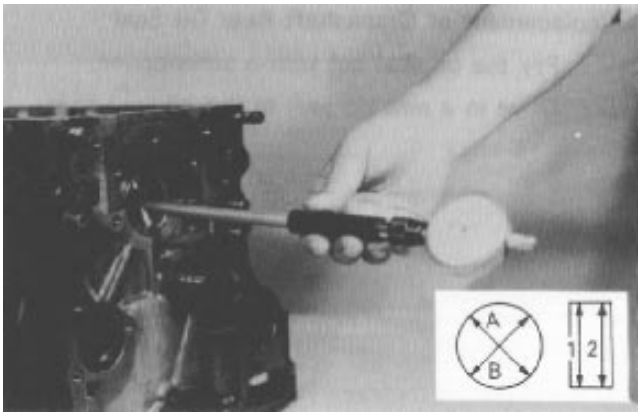

Figure 95

10. Reverse steps 1 - 5 to install the crankshaft (Fig. 97). When installing the No. 1 and No. 4 bearing caps, apply sealant (Permatex No. 2 or equivalent) to the upper surface that meets with the cylinder block.

11. Use a dial indicator to measure the crankshaft end play. If end play exceeds specifications, replace all the main bearings.

Crankshaft end play: 0.05 - 0.175 mm (0.002 - 0.007 in.)

12. Apply sealant (Permatex No. 2 or equivalent) to the outside surface of the side seals. Install the side seals with the radius towards the outside of the engine (Fig. 96).

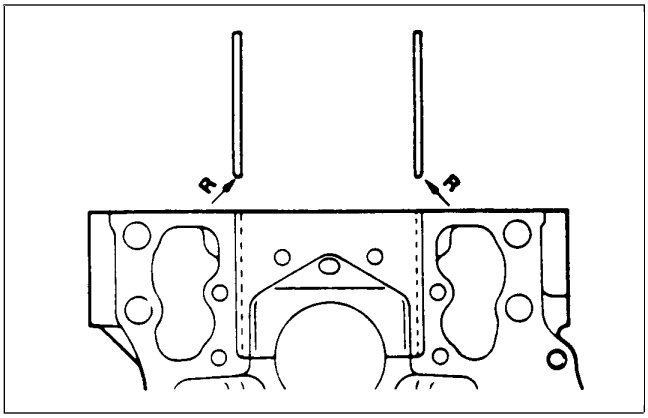

Figure 96

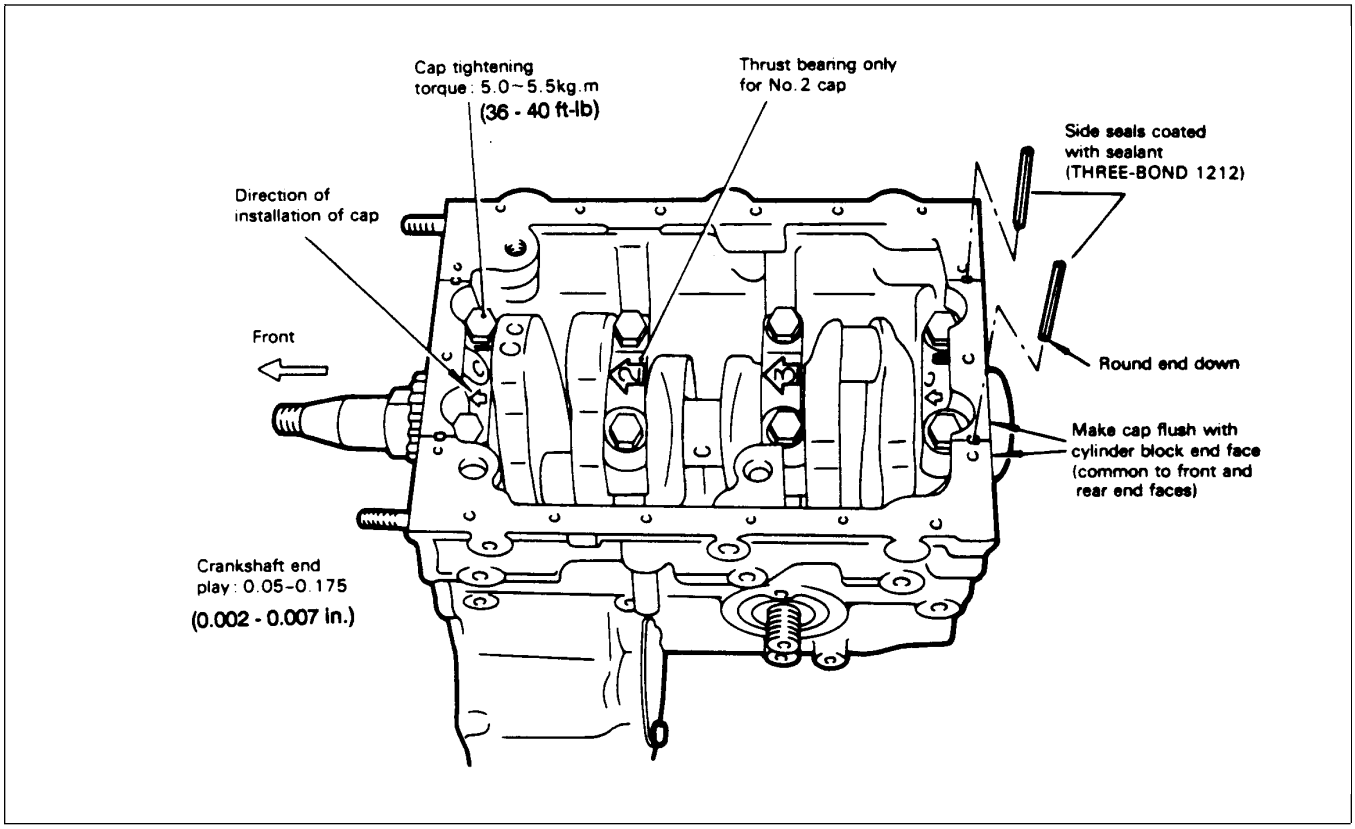

Figure 97

Cylinder Block

Before cleaning check the cylinder block for coolant leaks, oil leaks or damage. Clean all parts to remove dirt, oil, carbon deposits and water scale.

Check the cylinder block for cracks or other damage. Check the water jacket for water scale and rust. Replace the cylinder block if necessary.

Measure each cylinder bore size in six locations (Fig. 98). The standard bore diameter is 76 mm (2.9921 in.). The cylinder must be rebored and oversized piston and rings installed if the diameter exceeds the standard by 0.2 mm (0.0079 in.). Examine the cylinder bore diameter readings to determine the amount of taper in the cylinder. If the taper exceeds 0.01 mm (0.0004 in.), the cylinder must be rebored and oversized piston and rings installed.

IMPORTANT: If one cylinder is rebored, all cylinders must be rebored to the same specifications.

NOTE: See the Specifications section of this chapter for oversize finishing sizes. After machining, install the piston and piston rings corresponding to the reworked cylinder size.

NOTE: When the cylinder bore is worn a small amount and only the piston rings require replacement, check for groove wear in the upper part of the cylinder. Hone the cylinder if necessary.

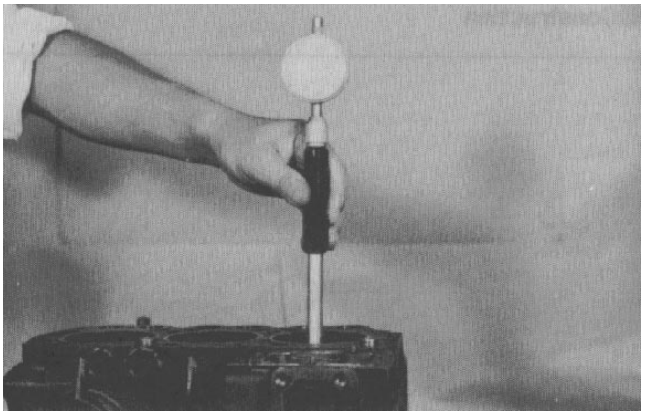

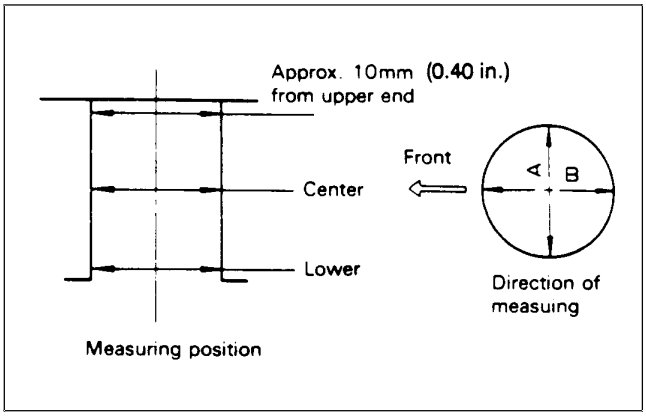

Figure 98

Reboring Cylinder

1. Select a piston:

   0.25, 0.50 mm (0.01, 0.02 in.) oversize

2. Measure the piston diameter (Fig. 84).

3. Reboring finish dimension = (Piston O.D.) + (Clearance) – (Honing allowance).

   Clearance: 0.071 - 0.084 mm (0.0028 - 0.0033 in.)
   Honing allowance = 0.02 mm (0.0008 in.)

Chapter 4

Hydraulic System

Table of Contents

SPECIFICATIONS 2
GENERAL INFORMATION 3
- Hydraulic Hoses 3
- Hydraulic Fitting Installation 3
- Towing 5

HYDRAULIC SCHEMATIC 6
HYDRAULIC FLOW DIAGRAMS 7
- Traction Forward 7
- Lower Cutting Units / Mow 8
- Backlap – Front 10
- Raise Cutting Units 11

SPECIAL TOOLS 12
TROUBLESHOOTING 15
- Transmission Operates in One Direction Only . 15
- Traction Pedal Does Not Return to Neutral Properly 15
- Transmission Jerky When Starting 15
- Transmission Operating Hot 16
- Loss of Traction Power or Unit Will Not Operate In Either Direction 17
- No Cutting Units Operate 17
- Front Reels Will Not Turn in Either Direction . . . 18
- Front Reels Turn in Only One Direction . . . . . .
- Front Reel(s) Turn Too Slow 19
- Front Reels Turn Too Fast 20
- Front Reels Turn in Only One Direction 20
- Front Reels Stop Under Load 20
- Front Reel Speed Erratic 21
- Front Reels Stop or Won't Stop During Backlap Only 21
- Rear Cutting Unit Problems 21
- Cutting Unit(s) Will Not Raise 22
- Cutting Units Raise, But Will Not Stay Up 23
- Cutting Units Raise Too Fast or Too Slow 23
- Cutting Units Will Not Lower 24

TESTING 25
- Test No. 1: Traction Circuit Charge Pressure . . 26
- Test No. 2:Traction Circuit System Pressure . . . 27
- Test No. 3: Front Mow/Lift Circuit Pressure 28
- Test No. 4: Rear Mow Circuit Pressure 29
- Test No. 5: Reel Drive Pump Efficiency 30
- Test No. 6: Reel Drive Circuit Flow 31
- Test No. 7: Reel Drive Motor Efficiency and Mow Circuit Relief Pressure 32

ADJUSTMENTS 33
- Traction Control Neutral Adjustment 33
- Lift Circuit Variable Orifice Adjustment 34

TRANSMISSION REPAIRS 35
- Shaft Seal Replacement 35
- Transmission Control Linkage Removal 36
- Trunnion Seal Replacement 37
- Check and High Pressure Relief Valves 38
- Charge Pressure Relief Valve 39
- Heat Exchanger Bypass Valve 40
- Filter Bypass Valve 40
- Filter Bypass Reverse Flow Check Valve 41
- Charge Pump 42
- Transmission Removal and Installation 43
- Disassembly of Transmission 44
- Assembly of Transmission 49

MOWING CIRCUIT REPAIRS 54
- Valve Block Service 54
- Cartridge Valve Service 55
- Cartridge Valve Identification 56
- Pump Removal and Installation 58
- Pump Repair 59
- Reel Motor Removal and Installation 61
- Reel Motor Shaft Seal Replacement 62
- Reel Motor Repair 63
- Lift Cylinder Removal and Installation 64
- Lift Cylinder Repair 65
- Flushing The Hydraulic System 67
- Inspecting Reservoir Parts 68

Specifications

Item	Description
Transmission System relief pressure 2WD units 4WD units Charge relief pressure Cooler By-pass pressure Filter By-pass pressure Oil filter	Sauer-Sundstrand M25, U-type 2750 ± 150 psi at 3250 RPM 3200 ± 150 psi at 3250 RPM 150 ± 30 psi at 3250 RPM 70 ± 10 psi 70 ± 10 psi Screw-on type
Auxiliary Pump Steering relief pressure	3 section, external gear type 1250 psi (cracking)
Reel Motor (5)	External gear type
Valve Block Front reel circuit relief pressure Rear reel circuit relief pressure	Toro, cartridge logic, elec./hyd. solenoid actuated 3000 psi 2000 psi
Hydraulic Oil – Reel Drive & Steering (Fig. 2) Group 1 (for ambient temp. consistently below 100° F) Group 2 (for ambient temp. consistently above 70° F)	 ISO type 46/68 anti-wear hydraulic fluid (Mobil 424 or equiv.) ISO type 68 anti-wear hydraulic fluid (Mobil DTE 26 or equiv.)
Hydraulic Reservoir – Reel Drive & Steering (Fig. 2)	8 U.S. gal. approx. capacity (9.5 U.S. gal. approx. system capacity)
Oil filter – Reel Drive & Steering	Screw-on cartridge type, 50 psi bypass
Transmission Oil (Fig. 1)	ISO type 46/68 anti-wear hydraulic fluid (Mobil 424 or equiv.)
Transmission Resevoir	5 U.S. qt. approx. system capacity

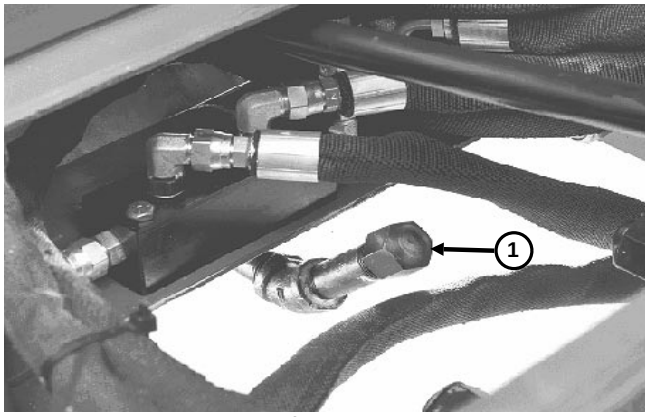

Figure 1

1. Transmission dipstick cap

Hydraulic Oil

The hydraulic system was initially filled at the factory with Mobil 424 oil.

Two groups of hydrauic oil are specified to allow optimal operation of the machine in a wide range of temperatures encountered.

The group 1 oil are a multi-viscosity hydraulic oil which allows operation at lower temperatures without the increased viscosity, which is associated with straight viscosity oils.

The group 2 type oils are straight viscosity oils which remain slightly more viscous at higher temperatures than the multi-viscosity oils.

Using group 1 oils in higher ambient temperatures may result in decreased efficiency in some of the hydraulic components compared to using group 2 oils.

Using group 2 oils in lower ambient temperatures may result in harder starting, increased engine laboring while cold, sluggish or non-operating valve spools while cold and increased filter back pressure due to the higher oil viscosity.

It is recommended that you select which conditions (either ambient temperatures above 70°F or below 100°F) and use that type of oil throughout the year, rather than changing oil types several times per year.

NOTE: When changing from one type of hydraulic oil to the other, be certain to remove all the old oil from the system, because some brands of one type are not completely compatible with some brands of the other type of hydraulic oil. If you always use Mobil products, the two types of oil are compatible and interchangeable.

IMPORTANT: Use only types of hydraulic oils specified. Other fluids could cause system damage.

NOTE: A red dye additive for the hydraulic system oil is available in 2/3 oz. bottles. One bottle is sufficient for 4 to 6 gallons of hydraulic oil. Order Part No. 44-2500 from your Authorized Toro Distributor.

Group 1 Hydraulic Oil (Recommended for ambient temperatures **consistently below 100° F**):

ISO type 46/68 anti-wear hydraulic fluid

Mobil	Mobil Fluid 424
Amoco	Amoco 1000
International Harvester	Hy-Tran
Texaco	TDH
Shell	Donax TD
Union Oil	Hydraulic/Tractor Fluid
Chevron	Tractor Hydraulic Fluid
BP Oil	BP HYD TF
Boron Oil	Eldoran UTH
Exxon	Torque Fluid
Conoco	Power-Tran 3
Kendall	Hyken 052
Phillips	HG Fluid

NOTE: The oils within this group are interchangeable.

Group 2 Hydraulic Oil (Recommended for ambient temperatures **consistently above 70° F**):

ISO type 68 anti-wear hydraulic fluid

Mobil	DTE 26 or DTE 16
Shell	Tellus 68
Amoco	Rykon Oil 68
Arco	Duro AW S-315
Boron	Industron 53
BP Oil	Energol HLP68
Castrol	Hyspin AWS68
Chevron	Chevron EP68
Citgo	Citgo A/W68
Conoco	Super Hydraulic Oil 31
Exxon	Nuto H68
Gulf	68AW
Pennzoil	AW Hyd Oil 68
Phillips	Magnus A315
Standard	Industron 53
Texaco	Rando HD68
Union	Unax AW 315

NOTE: The oils within this group are interchangeable.

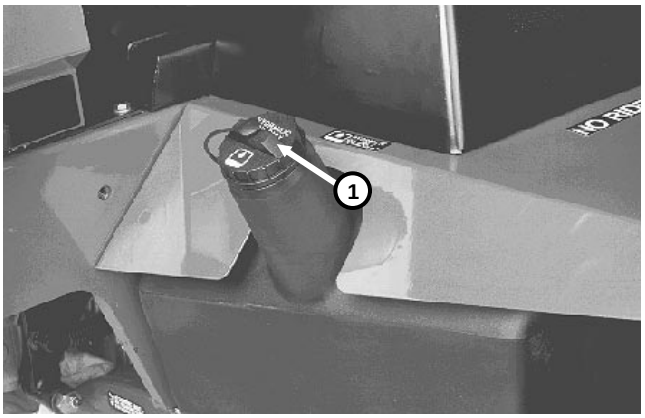

Figure 2

1. Hydraulic reservoir cap

General Information

Hydraulic Hoses

Hydraulic hoses are subject to extreme conditions such as, pressure differentials during operation and exposure to weather, sun, chemicals, very warm storage conditions or mishandling during operation or maintenance. These conditions can cause damage or premature deterioration. Some hoses, such as reel motor hoses, are more susceptible to these conditions than others. Inspect the hoses frequently for signs of deterioration or damage.

When replacing a hydraulic hose, be sure that the hose is straight (not twisted) before tightening the fittings. This can be done by observing the imprint on the hose. Use two wrenches; one to hold the hose straight and one to tighten the hose swivel nut onto the fitting.

WARNING

Before disconnecting or performing any work on the hydraulic system, all pressure in the system must be relieved by lowering the cutting units to the ground and stopping the engine.

Keep body and hands away from pin hole leaks or nozzles that eject hydraulic fluid under high pressure. Use paper or cardboard, not hands, to search for leaks. Hydraulic fluid escaping under pressure can have sufficient force to penetrate the skin and do serious damage. If fluid is injected into the skin, it must be surgically removed within a few hours by a doctor familiar with this type of injury or gangrene may result.

Hydraulic Fitting Installation

O-Ring Face Seal

1. Make sure both threads and sealing surfaces are free of burrs, nicks, scratches, or any foreign material (Fig. 3).

2. Make sure the O-ring is installed and properly seated in the groove. It is recommended that the O-ring be replaced any time the connection is opened.

3. Lubricate the O-ring with a light coating of oil.

4. Put the tube and nut squarely into position on the face seal end of the fitting and tighten the nut until finger tight.

5. Mark the nut and fitting body. Hold the body with a wrench. Use another wrench to tighten the nut to the correct flats from finger tight (F.F.F.T.). The markings on the nut and fitting body will verify that the connection has been tightened.

Size	F.F.F.T.
4 (1/4 in. nominal hose or tubing)	.75 ± .25
6 (3/8 in.)	.75 ± .25
8 (1/2 in.)	.75 ± .25
10 (5/8 in.)	1.00 ± .25
12 (3/4 in.)	.75 ± .25
16 (1 in.)	.75 ± .25

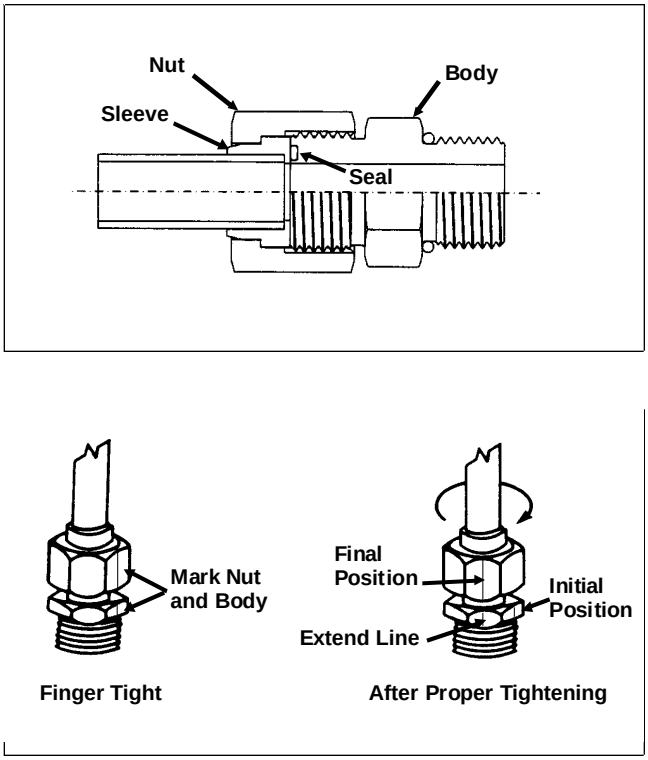

Figure 3

SAE Straight Thread O-Ring Port (Non-adjustable)

1. Make sure both threads and sealing surfaces are free of burrs, nicks, scratches, or any foreign material.

2. Always replace the O-ring seal when this type of fitting shows signs of leakage.

3. Lubricate the O-ring with a light coating of oil.

4. Install the fitting into the port and tighten it down full length until finger tight (Fig. 4).

5. Tighten the fitting to the correct flats from finger tight (F.F.F.T.).

Size	F.F.F.T.
4 (1/4 in. nominal hose or tubing)	1.00 ± .25
6 (3/8 in.)	1.50 ± .25
8 (1/2 in.)	1.50 ± .25
10 (5/8 in.)	1.50 ± .25
12 (3/4 in.)	1.50 ± .25
16 (1 in.)	1.50 ± .25

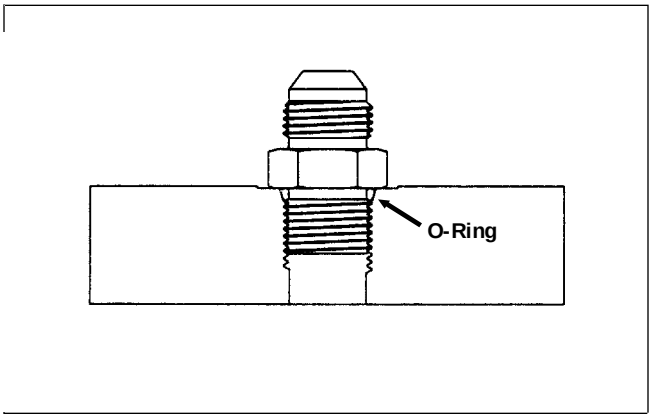

Figure 4

SAE Straight Thread O-Ring Port (Adjustable)

1. Make sure both threads and sealing surfaces are free of burrs, nicks, scratches, or any foreign material (Fig. 5).

2. Always replace the O-ring seal when this type of fitting shows signs of leakage.

3. Lubricate the O-ring with a light coating of oil.

4. Turn back the jam nut as far as possible. Make sure the back up washer is not loose and is pushed up as far as possible (Step 1).

5. Install the fitting into the port and tighten finger tight until the washer contacts the face of the port (Step 2).

6. To put the fitting in the desired position, unscrew it by the required amount, but no more than one full turn (Step 3).

7. Hold the fitting in the desired position with a wrench and turn the jam nut with another wrench to the correct flats from finger tight (F.F.F.T.) (Step 4)

Size	F.F.F.T.
4 (1/4 in. nominal hose or tubing)	1.00 ± .25
6 (3/8 in.)	1.50 ± .25
8 (1/2 in.)	1.50 ± .25
10 (5/8 in.)	1.50 ± .25
12 (3/4 in.)	1.50 ± .25
16 (1 in.)	1.50 ± .25

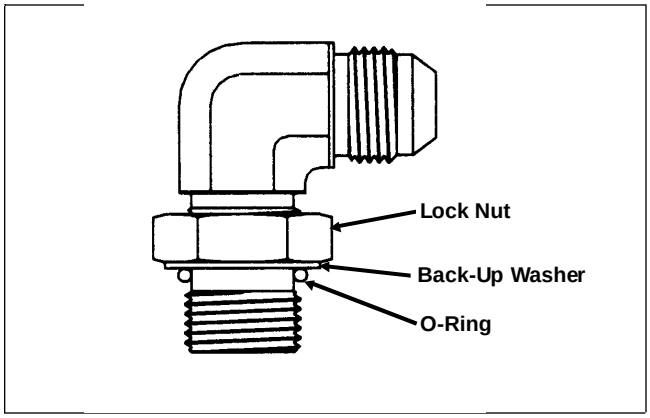

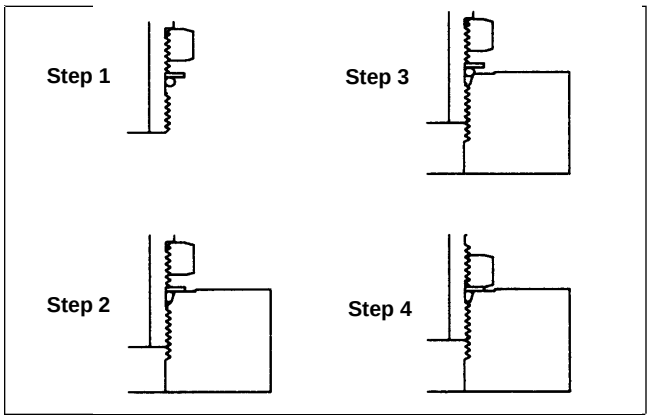

Figure 5

Pushing or Towing

If it becomes necessary to tow the machine, tow it forward only and at a speed no greater than 10 mph.

IMPORTANT: If these towing limits are exceeded, severe damage to the hydrostatic transmission may occur.

To tow a disabled machine:

1. Loosen and remove capscrews securing drive shaft to engine drive coupler. Loosen capscrews clamping drive shaft to transmission (Fig. 6). Remove drive shaft.

IMPORTANT: If drive shaft is not removed before towing, the transmission input shaft will not be able to rotate, thus not allowing transmission to maintain its internal lubrication. Severe damage to the hydrostatic transmission may occur.

2. Attach a suitable chain, strap or cable to the center of the front frame member (Fig. 7).

3. Attach the other end of the towing device to a vehicle that is capable of towing the machine safely and at speeds below 10 mph.

4. AN OPERATOR MUST BE ON THE MACHINE to steer it and keep the traction pedal fully depressed in the forward position while towing.

5. When towing is completed, install drive shaft as shown in Figure 6. The splines are designed to allow assembly only when the two halves of the shaft are properly oriented.

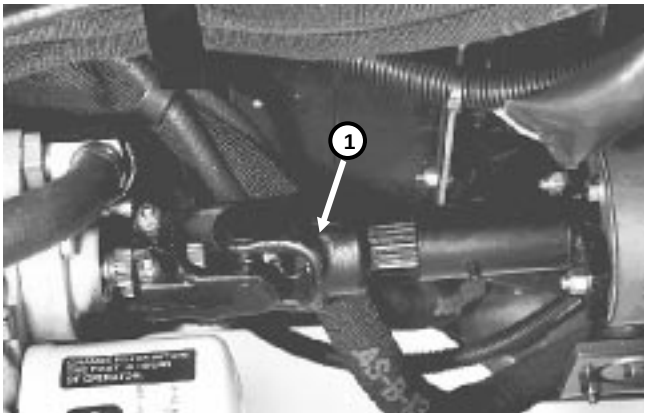

Figure 6

1. Drive shaft

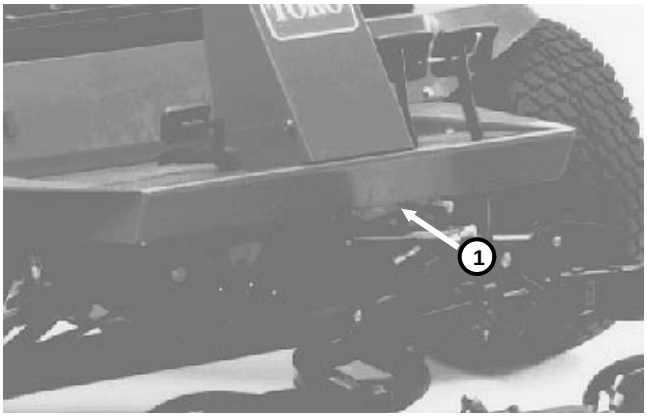

Figure 7

1. Center of front frame member

Hydraulic Schematic

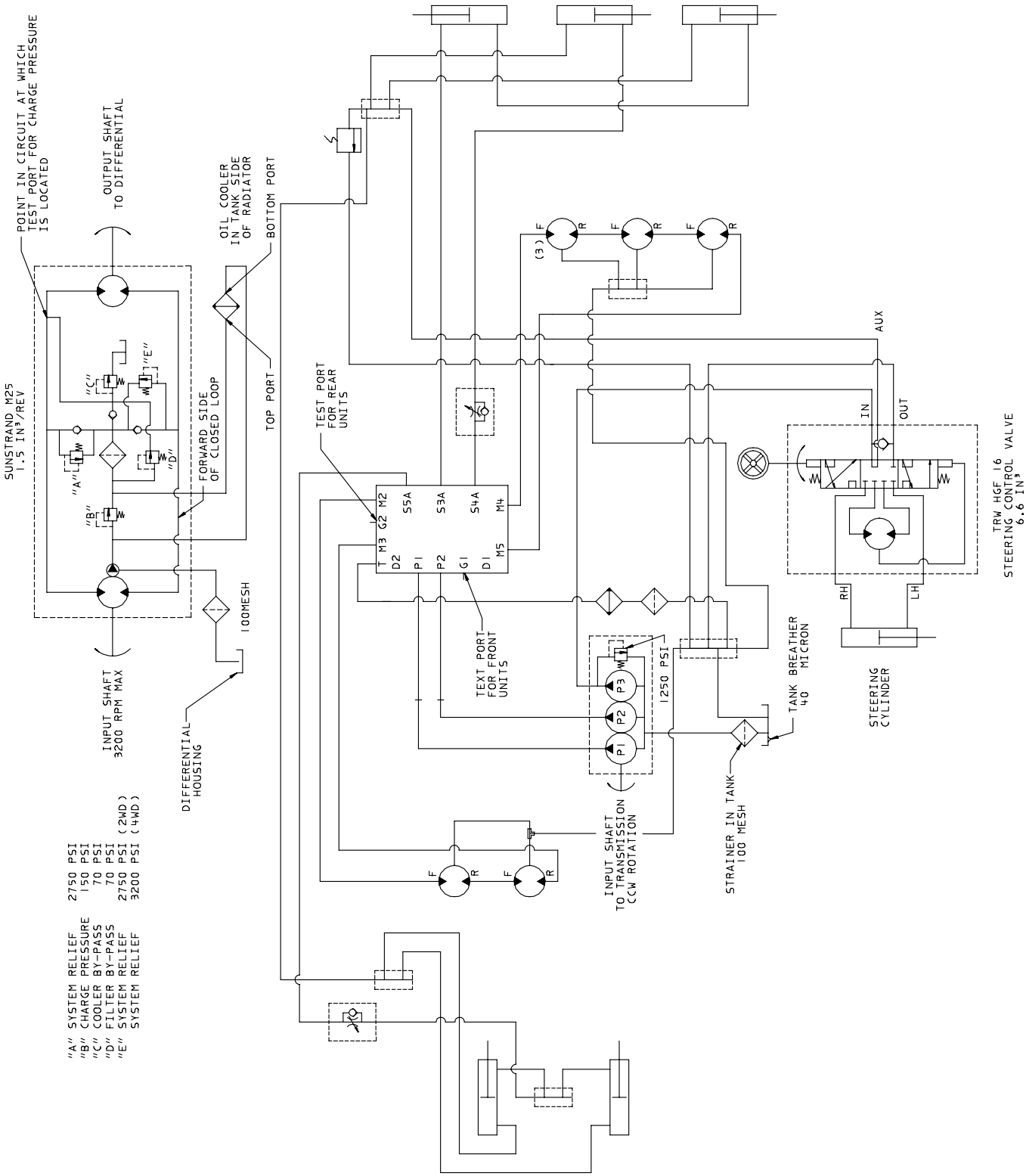

Hydraulic Flow Diagrams

Traction Forward

The hydrostatic transmission is driven by a drive shaft off the front of the engine crankshaft. Pushing the top of the traction pedal, rotates the variable displacement pump swash plate to create a flow of oil. This oil is directed to the fixed displacement motor which turns the differential input shaft to drive the front wheels. Operating pressure on the high pressure side of the closed loop is determined by the amount of load developed at the fixed displacement motor. As the load increases, pressure can increase to a maximum of 2750 PSI (3200 PSI if equipped with 4WD). Main system pressure is limited by a high pressure relief valve on each side of the closed loop circuit. System pressure can be measured at test ports on the transmission. If pressure exceeds the relief setting, oil flows through the relief valve to the low pressure side of the closed loop circuit.

An integral charge pump provides a constant supply of charge oil to the variable displacement pump and closed loop circuit for lubrication and to make up for oil that is lost due to internal leakage in the pump and motor. Charge pump flow is directed through the oil cooler, then through the filter to the low pressure side of the closed loop circuit. A cooler bypass valve and filter bypass valve allow charge oil flow to the closed loop if the cooler or filter becomes plugged. Charge pressure is limited to 150 PSI by a relief valve. Charge pressure can be monitored at the charge pump test port.

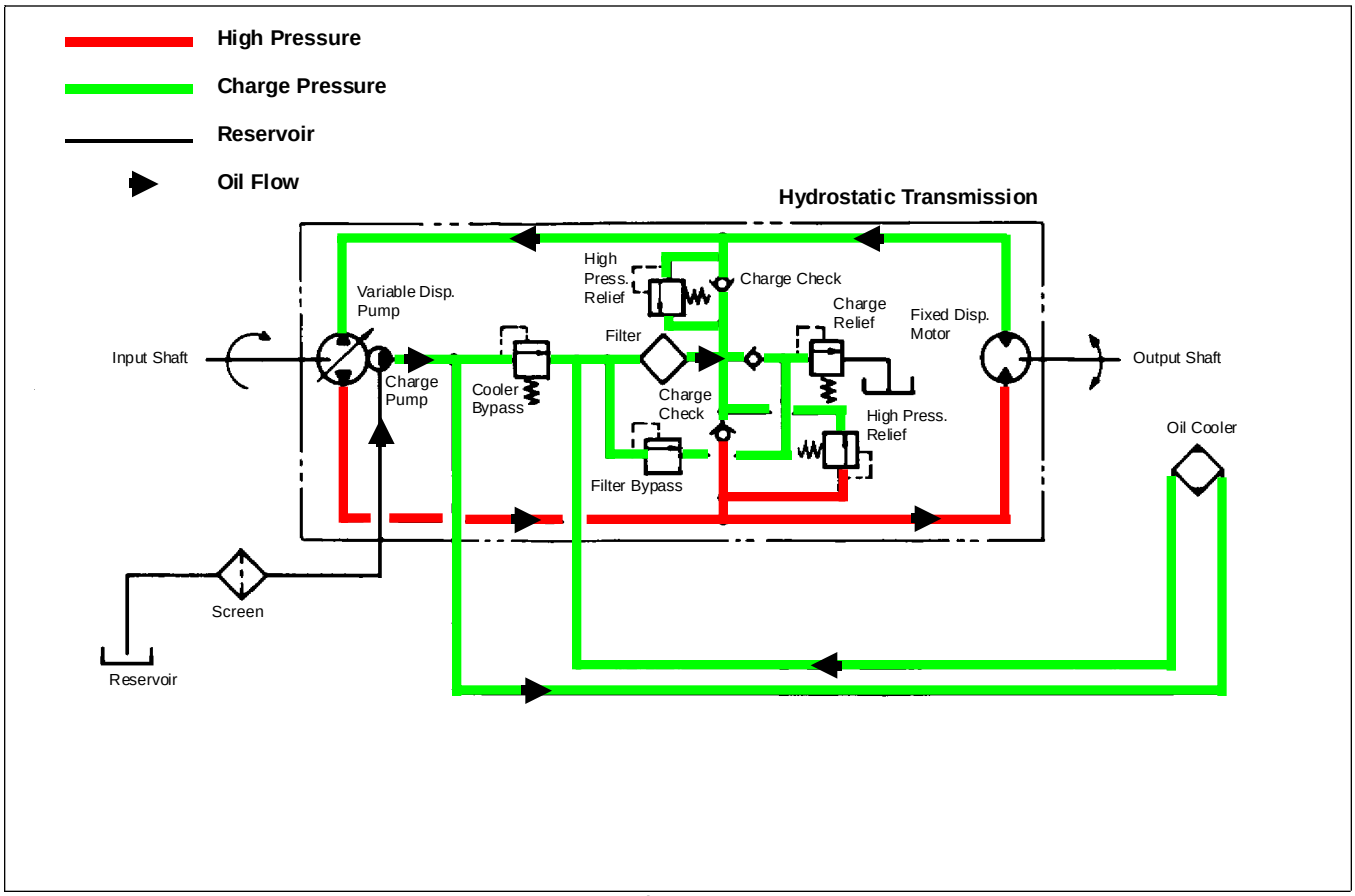

Figure 9

Lower Cutting Units / Mow

The hydraulic pump that provides oil flow to the reel drive circuit is driven off the PTO output shaft of the hydrostatic transmission. This oil flow enters a control valve block which directs the oil flow to perform the functions of reel drive and cutting unit lift and lower.

The valve block consists of two individual control circuits. Each circuit is supplied by its own pump section – "P1" and "P2". The only common connection from one circuit to the other is the case drains from the motors and the tank ports from all valves.

To lower the cutting units, solenoid valves "S3", "S4", and "S5" must be energized along with "S6". Valve "S6" is a load holding poppet-type valve. If "S6" is not energized, no cutting units will lower. Valve "S7" must be in its normal de-energized position to allow the return oil from the cylinder circuit to be directed to tank.

On the "P1" pump circuit, maximum system pressure is limited by relief valve "R1" which is set at 3000 PSI. System pressure on the "P1" side can be measured at Port "G1". Total pump flow must go through solenoid valve "S7". In its normal de-energized position, valve "S7" directs pump flow to the front reel circuit. Solenoid valve "S1" must be energized to allow pressure to build in the front reel circuit. When solenoid valve "S1" is energized, variable solenoid valve "VS1" will direct part of the pump flow to tank, while directing the remaining flow to solenoid valve "S8" and out to the front reel motors. Valve "VS1" is adjusted by the electronic control unit (ECU) with a variable duty cycle pulse-width-modulated (PWM) voltage. As the PWM duty cycle is increased, less oil is by-passed to tank, causing more oil to go to the reel motors. When "VS1" is fully energized, no flow by-passes to tank and all flow is routed to the reel motors. In its normal de-energized position, solenoid valve "S8" directs flow from "VS1" to the front reel motors to turn them in a forward or "mow" direction. Return oil from the motors is directed to tank through valve "S8".

On the "P2" pump circuit, maximum system pressure is limited by relief valve "R2", which is set at 2000 PSI. This pressure can be monitored at port "G2". Solenoid valve "S2" must be energized to allow pressure to build in the rear reel circuit. The variable solenoid valve "VS2" controls reel speed and functions the same as "VS1". In its normal de-energized position, solenoid valve "S9" directs flow from "VS2" to the front reel motors to turn them in a forward or "mow" direction. Return oil from the motors is directed to tank through valve "S9".

NOTE: The variable solenoid valves, "VS1" and "VS2", are energized with a pulse-width-modulated (PWM) voltage during most mowing or backlapping operations. Only when the reel speed control is set to full speed (position A), are the valves energized with a full 12 volts.

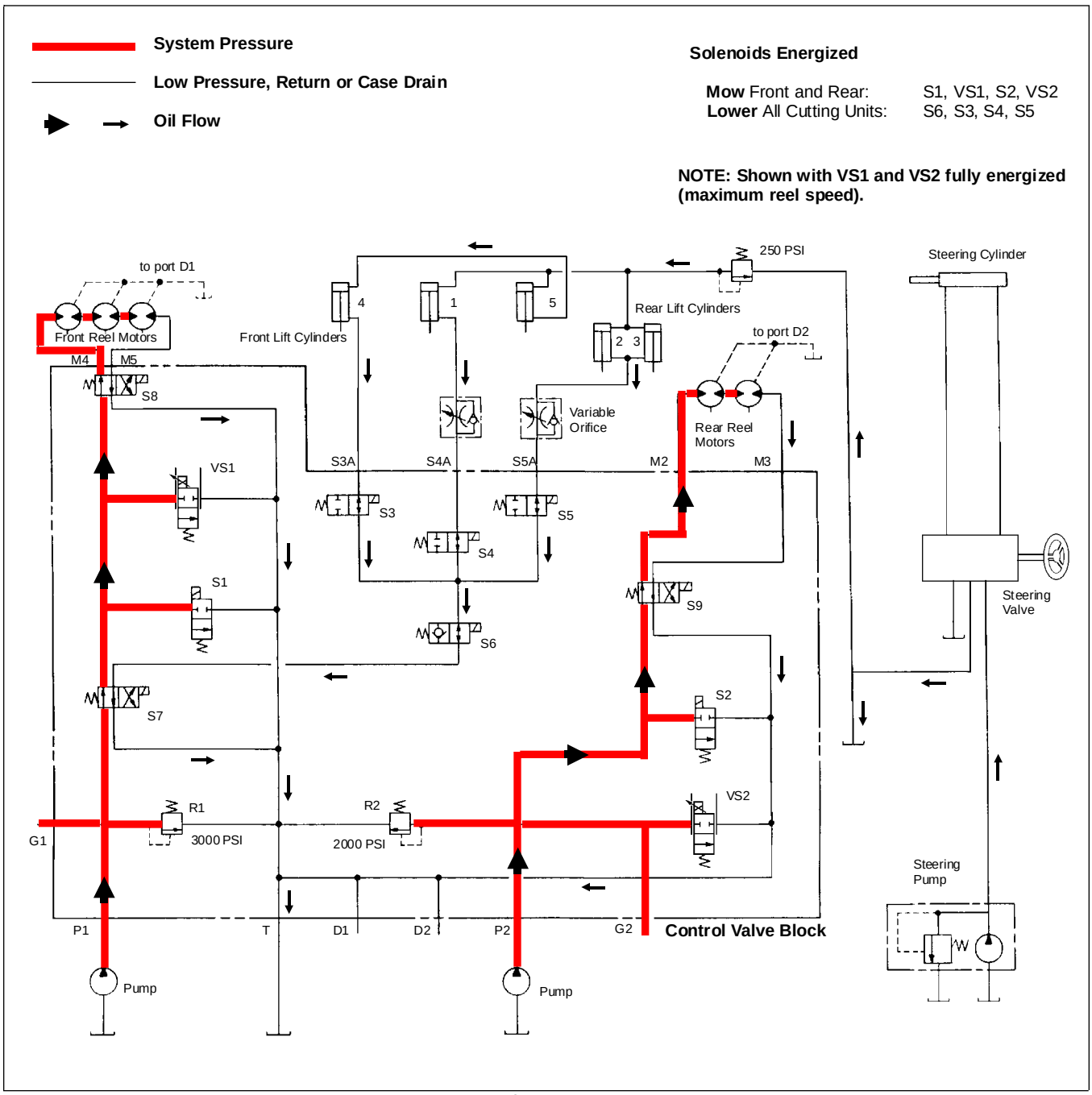
System Pressure
Low Pressure, Return or Case Drain
Oil Flow
Solenoids Energized
Mow Front and Rear: S1, VS1, S2, VS2
Lower All Cutting Units: S6, S3, S4, S5
NOTE: Shown with VS1 and VS2 fully energized (maximum reel speed).
to port D1
Front Reel Motors
M4
M5
S8
Front Lift Cylinders
4
1
5
250 PSI
Rear Lift Cylinders
2
3
to port D2
Variable Orifice
Rear Reel Motors
M2
M3
S3A
S4A
S5A
VS1
S3
S5
S4
S1
S6
S9
S7
S2
VS2
R1
3000 PSI
R2
2000 PSI
G1
P1
T
D1
D2
P2
G2
Control Valve Block
Pump
Pump
Steering Cylinder
Steering Valve
Steering Pump

Figure 10

Backlap (Front Shown)

During “backlap”, the circuits operate the same as in the “mow” mode except for the operation of solenoid valves “S8” and “S9”.

To backlap, solenoid valves “S8” and “S9” are energized to direct flow to the reel motors so they will run in a backwards or “backlap” direction. The electrical system is designed so that only one circuit (front cutting units or rear cutting units) can be operated when in the backlap mode. To backlap the front cuttting units, solenoid valve “S1” is energized allowing pressure to build in the front reel circuit. When solenoid valve “S1” is energized, variable solenoid valve “VS1” will direct part of the pump flow to tank, while directing the remaining flow to solenoid valve “S8” and out to the front reel motors. Return oil from the motors is directed to tank through valve “S8”.

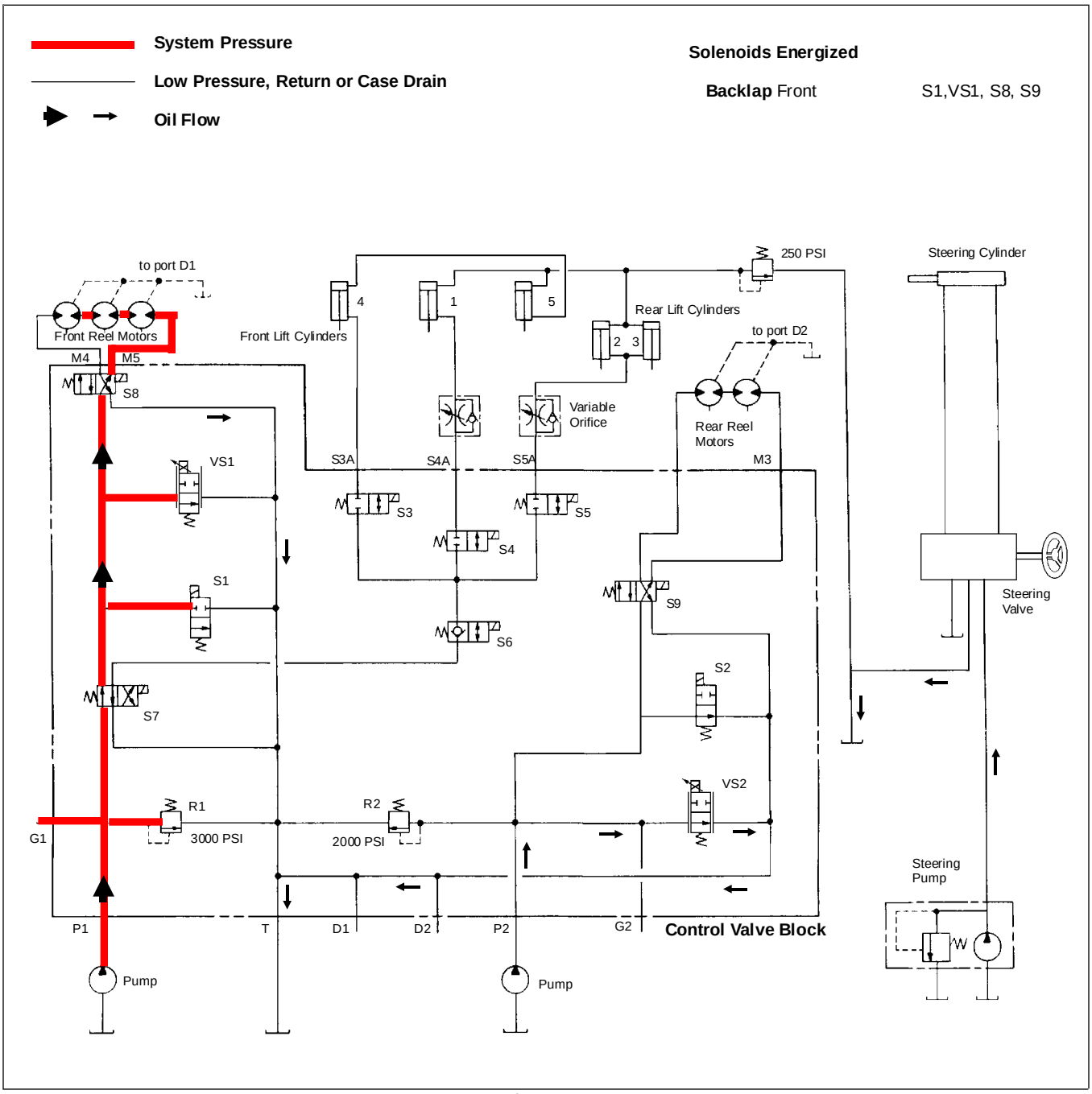

Figure 11

Raise Cutting Units

The “P1” pump circuit controls the raise and lower function of all five cutting units. On the “P1” pump circuit, maximum system pressure is limited by relief valve “R1” which is set at 3000 PSI. System pressure on the “P1” side can be measured at Port “G1”.

To raise the cutting units, solenoid valve “S7” is energized to direct pump flow through valve “S6”, a normally closed poppet-type valve, and on to valves “S3”, “S4”, and “S5”. These three normally closed valves control which cutting units raise or lower. To raise a cutting unit, valve “S7”, and “S3”, “S4” or “S5” must be energized.

The return oil from the cylinders is directed back to tank externally from the valve block.

To hold the cutting units up in any position, all of the solenoid valves are de-energized. Valve “S6” is the load holding valve and this is the reason it is a poppet-type valve.

The lift speed of No. 1 (front center), and No. 2 and 3 (rear) cutting units is regulated by one-way variable orifices which are located in the hydraulic lines between the valve block and lift cylinders.

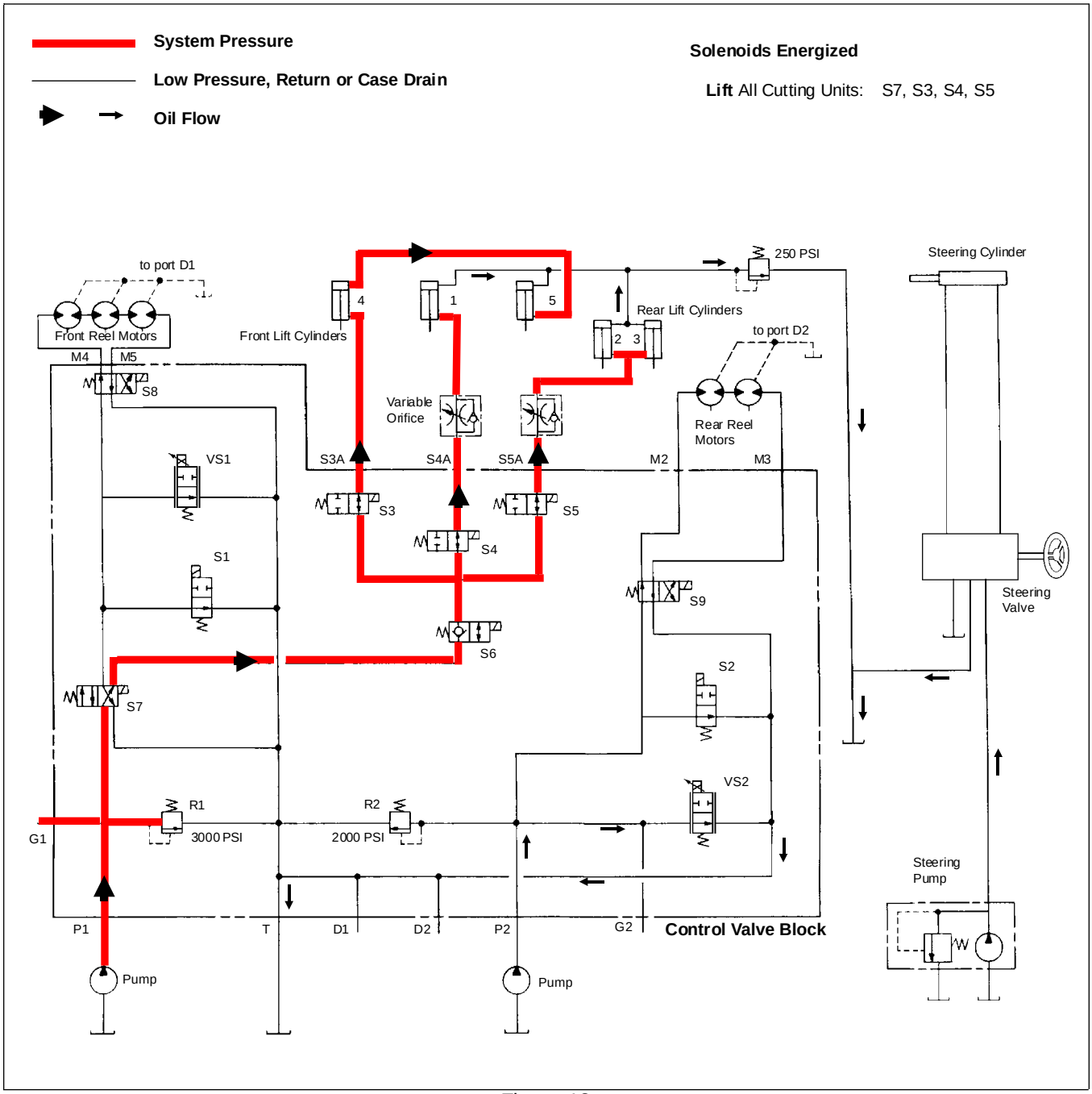

Figure 12

Special Tools

NOTE: Order special tools from the *TORO SPECIAL TOOLS AND APPLICATIONS GUIDE (COMMERCIAL PRODUCTS)*. Some tools may be listed in the Reelmaster 5100-D Parts Catalog. Some tools may also be available from a local supplier.

Seal Protector

Slide protector over reel motor shaft before installing shaft seal to protect seal from damage. Apply a light coating of clean oil to seal protector to ease movement of seal over tool. Use with seal installer tool.

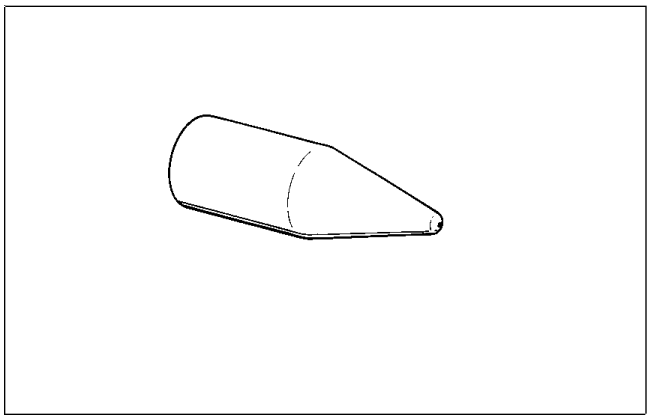

Figure 13

Seal Installer

Use installer and a small hammer to drive reel motor shaft seal into position in bore of reel motor body. Use with seal protector tool.

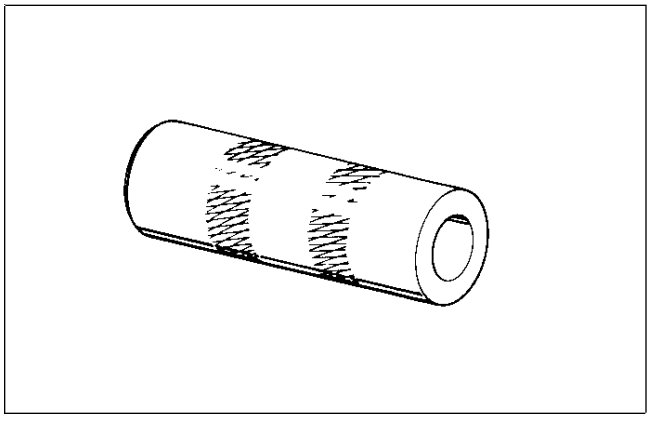

Figure 14

Hydraulic Pressure Test Kit

Used to take various hydraulic pressure readings for diagnostic tests. Quick disconnect fittings provided attach directly to mating fittings on machine test ports without tools. A high pressure hose is provided for remote readings. Contains one each, 1,000, 5,000 and 10,000 PSI gauges. Use gauges as recommended in Testing section of this chapter.

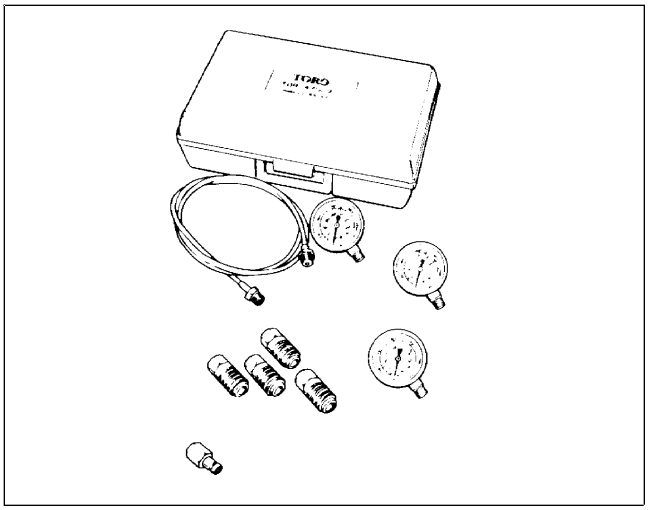

Figure 15

Hydraulic Tester (With Pressure and Flow Capabilities)

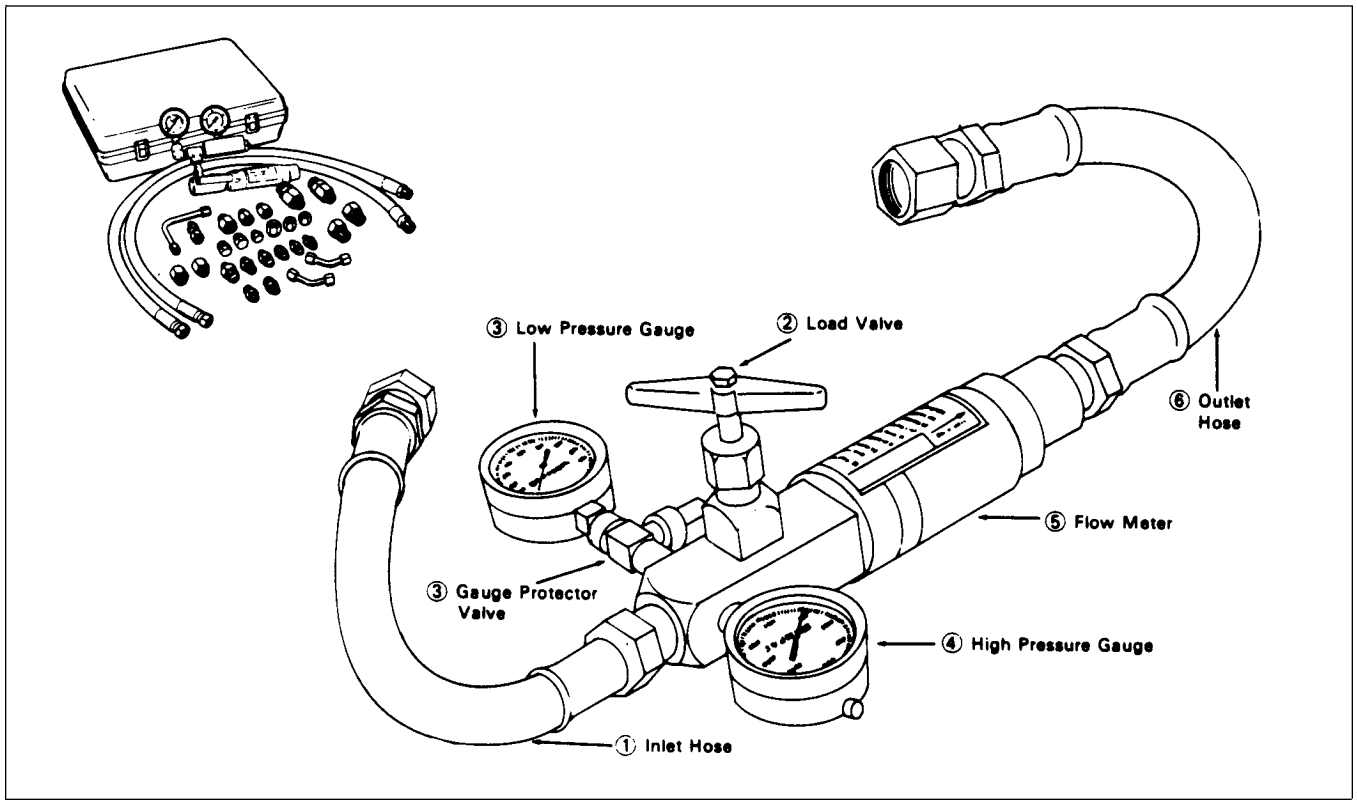

Figure 16

You must have o-ring face seal (ORFS) adapter fittings for this tester to use it on the Reelmaster 5100-D.

1. INLET HOSE: Hose connected from the system circuit to the inlet side of the hydraulic tester.

2. LOAD VALVE: If required, upon turning the valve to restrict flow, a simulated working load is created in the circuit.

3. LOW PRESSURE GAUGE: Low range gauge to provide accurate reading at low pressure, 0 - 1000 psi.

   This gauge has a protector valve which cuts out when pressure is about to exceed the normal range for the gauge. The cutout pressure is adjustable.

4. HIGH PRESSURE GAUGE: High range gauge to accommodate pressure beyond the capacity of the low pressure gauge, 0 - 5000.

5. FLOW METER: This meter measures actual oil flow in the operation circuit, with a gauge rated at 15 GPM.

6. OUTLET HOSE: Hose from the outlet side of the hydraulic tester to be connected to the hydraulic system circuit.

Troubleshooting

The cause of an improperly functioning hydraulic system is best diagnosed with the use of proper testing equipment and a thorough understanding of the complete hydraulic system.

A hydraulic system with an excessive increase in heat or noise is a potential failure. Should either of these conditions be noticed, immediately stop the machine, turn off the engine, locate the cause of the trouble, and correct it before allowing the machine to be used again. Continued use of an improperly functioning hydraulic system could lead to extensive internal component damage.

The charts that follow contain detailed information to assist in troubleshooting. There may possibly be more than one cause for a machine malfunction. All causes should be checked in the order in which they are listed on the charts.

Refer to the Testing section of this Chapter for precautions and specific test procedures.

NOTE: In this troubleshooting guide, cartridge valves or ports in the control valve block are referred to by the labels used on the valve block and shown on the schematics, i.e. **R1**, **S1**, **VS1** (Fig. 10, 11, 12).

Transmission Operates in One Direction Only

Cause	Correction
Faulty traction control linkage.	Repair linkage
Transmission charge check/system relief valve defective.	Inspect and clean or replace charge check/system relief valve.

Traction Pedal Does Not Return to Neutral Properly

Cause	Correction
Incorrect charge check/system relief valve installed in reverse port of transmission.	Relief cartridge in reverse (bottom) port of transmission should have machined groove on sealing face.
Faulty traction control linkage.	Adjust or repair linkage.
Traction stud (eccentric) is positioned in wrong quadrant of linkage pivot (traction plate).	Traction stud (eccentric) must be in the rear quadrant to provide maximum spring tension.

Transmission Jerky When Starting

Cause	Correction
Faulty traction control linkage.	Repair linkage.
Faulty charge check/system relief valve.	Inspect and clean or replace charge check/system relief valve.

Machine Travels Too Far Before Stopping When Traction Pedal is Released

Cause	Correction
Traction linkage out of adjustment.	Adjust traction linkage.

Transmission Operating Hot

Cause	Correction
Engine RPM too low.	Adjust, use tachometer.
Transmission reservoir oil level too low.	Fill to proper level.
Cooling system not operating properly.	Clean screen, oil cooler and radiator. Repair fan or belt. Check coolant level and add coolant as necessary. Check for restricted oil cooler and repair or replace as necessary.
Faulty oil cooler bypass relief valve.	Inspect and clean or replace oil cooler bypass relief valve.
Charge pressure too low.	Inspect for plugged transmission filter and replace if necessary. Inspect charge relief valve and clean or replace if faulty. Inspect charge pump and repair or replace if faulty.
Traction pressure too high.	Reduce transmission load.
Traction pressure too low.	If pressure is low in only one direction (forward or reverse) check affected system relief valve and repair or replace if faulty. Repair or replace transmission (pump & motor).

Loss of Traction Power or Unit Will Not Operate In Either Direction

Cause	Correction
Engine RPM too low.	Adjust, use tachometer.
Drive shaft disconnected or damaged.	Repair or replace drive shaft.
Traction control linkage damaged or disconnected.	Repair linkage.
Transmission reservoir oil level too low.	Fill to proper level.
Charge pressure too low.	Inspect for plugged transmission filter and replace if necessary. Inspect charge relief valve and clean or replace if faulty. Inspect charge pump and repair or replace if faulty.
Traction pressure too low.	If pressure is low in only one direction (forward or reverse) check affected system relief valve and repair or replace if faulty. Repair or replace transmission (pump & motor).

No Cutting Units Operate

Cause	Correction
Improper operation of lower-mow/raise control lever.	Hold lever in forward (lower-mow) position until front cutting units begin operating. Do not allow lever to “slap” back to neutral.
Electrical problem.	See Chapter 5 - Electrical System.
Damaged pump or pump coupler.	Repair coupler and pump if necessary. NOTE: Steering and cutting unit lift will also be affected.

Front Reels Will Not Turn in Either Direction

Cause	Correction
S1 not shifting.	Do electrical diagnostics to make sure that voltage is being applied to S1 and that there is no electrical fault. See Chapter 5 - Electrical System. Do cartridge valve service procedure for valve S1. Interchange S1 with S2 and check operation. Replace S1 with a new valve if faulty.
R1 bypassing.	Check pressure at port G1 of valve block and adjust valve if necessary. Do cartridge valve service procedure for valve R1. Replace R1 with a new valve.
S7 partially shifted.	Try operating lift circuit up and down a number of times. Do cartridge valve service procedure for valve S7.
S7 energized (should only be energized during lift function).	Check for electrical or controller problem. See Chapter 5 - Electrical System.
VS1 not shifting.	Do electrical diagnostics to make sure that voltage is being applied to VS1 and that there is no electrical fault. See Chapter 5 - Electrical System. Do cartridge service procedure for VS1. Interchange VS1 with VS2 and check operation. Replace VS1 if faulty.

Front Reel(s) Turn Too Slow

Cause	Correction
R1 bypassing.	Check relief pressure at port G1 of valve block and adjust valve if necessary. Do cartridge valve service procedure for valve R1. Replace R1 with a new valve.
S7 partially shifted.	Try operating lift circuit up and down a number of times. Do cartridge valve service procedure for valve S7.
S8 partially shifted.	Do cartridge valve service procedure for valve S8. Interchange S8 with S9 and check operation. Replace S8 if faulty.
Internal leakage (by-passing oil) in reel motor.	Excessive case drain flow may identify faulty motor. Use hydraulic tester to perform reel motor efficiency test. Repair or replace reel motor if faulty.
P1 pump section inefficient.	Repair or replace pump.
VS1 not operating properly.	Do electrical diagnostics to make sure that voltage is being applied to VS1 and that there is no electrical fault. See Chapter 5 - Electrical System. Do cartridge service procedure for VS1. Interchange VS1 with VS2 and check operation. Replace VS1 if faulty.

Front Reels Turn Too Fast

Cause	Correction
VS1 not operating properly.	Do electrical diagnostics to make sure that voltage is being applied to VS1 and that there is no electrical fault. See Chapter 5 - Electrical System. Do cartridge service procedure for VS1. Interchange VS1 with VS2 and check operation. Replace VS1 if faulty.

Front Reels Turn in Only One Direction

Cause	Correction
S8 not shifting.	Do electrical diagnostics to make sure that voltage is being applied to S8 and that there is no electrical fault. See Chapter 5 - Electrical System. Do cartridge valve service procedure for valve S8. Interchange S8 with S9 and check operation. Replace S8 if faulty.

Front Reels Stop or Won't Start – During Backlap Only

Cause	Correction
Motors bypassing.	Increase flow to motors by adjusting HOC selector knob.
Load too high for motor.	Decrease load

Front Reels Stop Under Load

Cause	Correction
R1 bypassing.	Check relief pressure at port G1 of valve block and adjust valve if necessary. Do cartridge valve service procedure for valve R1. Replace R1 with a new valve.
Internal leakage (by-passing oil) in reel motor.	Excessive case drain flow may identify faulty motor. Use hydraulic tester to perform reel motor efficiency test. Repair or replace reel motor if faulty.
P1 pump section inefficient.	Repair or replace pump.

Front Reel Speed Erratic

Cause	Correction
Reel bearing or bedknife to reel adjustment too tight.	See Chapter 8 - Cutting Units.
Electrical problem.	See Chapter 5 - Electrical System.

REAR Cutting Unit Problems

Cause	Correction
For problems with rear cutting unit reel operation, refer to the Correction recommended for the front cutting units. NOTE: Rear cutting unit **lift functions** are controlled by P1 (front cutting unit) circuits of control valve.	Substitute R1 with R2 S1 with S2 S8 with S9 VS1 with VS2

Cutting Unit(s) Will Not Raise

Cause	Correction
One-way variable orifice closed - center and rear cutting units only - see Hydraulic Schematics.	Open speed control valve.
Engine RPM too low.	Increase engine RPM to operating speed.
S7 not shifting.	Do electrical diagnostics to make sure that voltage is being applied to S7 and that there is no electrical fault. See Chapter 5 - Electrical System. Test solenoid coil. Replace if faulty. See Chapter 5 - Electrical System. Oil viscosity too high - run machine to warm up oil to operating temperature. Do cartridge valve service procedure for valve S7.
S3, S4, or S5 not shifting (See Hydraulic Schematics to see which valve controls what lift cylinders.)	Do electrical diagnostics to make sure that voltage is being applied to solenoid for affected circuit and that there is no electrical fault. See Chapter 5 - Electrical System. Test solenoid coil for valve of affected circuit. Replace if faulty. See Chapter 5 - Electrical System. Do cartridge valve service procedure for valve in affected circuit. Interchange solenoid from affected circuit with another similar valve (S3, S4, or S5) and check operation. Replace or repair affected valve if faulty.
R1 bypassing.	Check relief pressure at port G1 of valve block and adjust valve if necessary. Do cartridge valve service procedure for valve R1. Replace R1 with a new valve.
Internal leakage in lift cylinder(s).	Check lift cylinder(s) and repair or replace if faulty.
Lift arm pivots binding.	Lubricate bushings. Inspect for damage. Repair or replace damaged parts.
P1 pump section inefficient.	Repair or replace pump.

Cutting Units Raise, But Will Not Stay Up

Cause	Correction
S6 energized (should only be energized during lower function).	Do electrical diagnostics. See Chapter 5 - Electrical System.
S6 leaking down (not seating properly).	Do cartridge valve service procedure for valve S6. Replace S6 with a new valve if faulty.

Cutting Units Raise Too Fast or Too Slow

Cause	Correction
One-way variable orifice not properly adjusted (center and rear cutting units only) - see Hydraulic Schematics.	Adjust variable orifice for affected circuit.

Cutting Units Will Not Lower

Cause	Correction
S3, S4, or S5 not shifting (See Hydraulic Schematics to see which valve controls what lift cylinders.)	Do electrical diagnostics to make sure that voltage is being applied to solenoid for affected circuit and that there is no electrical fault. See Chapter 5 - Electrical System. Do cartridge valve service procedure for valve in affected circuit. Interchange solenoid from affected circuit with another similar valve (S3, S4, or S5) and check operation. Replace affected valve with a new valve if faulty.
S6 not shifting.	Do electrical diagnostics to make sure that voltage is being applied to S6 and that there is no electrical fault. See Chapter 5 - Electrical System. Do cartridge valve service procedure for valve S6. Replace S6 with a new valve if faulty.
S7 shifted (should only be shifted during lift function).	Do electrical diagnostics to make sure that voltage is being applied to S7 and that there is no electrical fault. See Chapter 5 - Electrical System. Do cartridge valve service procedure for valve S7.

Testing

The most effective method for isolating problems in the hydraulic system is by using hydraulic test equipment such as pressure gauges and flow meters in the circuits during various operational checks. (See the Special Tools section in this Chapter.)

CAUTION

Failure to use gauges with the recommended pressure (psi) rating as listed in the test procedures could result in damage to the gauge and possible personal injury from leaking hot oil.

Before Performing Hydraulic Tests

All obvious areas such as oil supply, filter, binding linkage, loose fasteners, or improper adjustments must be checked before assuming that a hydraulic component is the source of the problem being experienced.

Do electrical diagnostics before performaing hydraulic tests to make sure the electrical system is operating properly. If the electrical system is not operating properly the hydraulic system may appear to malfunction.

WARNING

Before disconnecting or performing any work on the hydraulic system, all pressure in the system must be relieved by lowering the cutting units to the ground and shutting the engine OFF.

Keep body and hands away from pin hole leaks or nozzles that eject hydraulic fluid under high pressure. Use paper or cardboard, not hands, to search for leaks. Hydraulic fluid escaping under pressure can have sufficient force to penetrate skin and do serious damage. If fluid is injected into the skin, it must be surgically removed within a few hours by a doctor familiar with this type of injury or gangrene may result.

1. Thoroughly clean the machine before disconnecting or disassembling any hydraulic components. Always keep in mind the need for cleanliness when working on hydraulic equipment.

2. Put caps or plugs on any hydraulic lines left open or exposed during testing or removal of components.

3. The engine must be in good operating condition. Use a tachometer when making a hydraulic test. Engine speed can affect the accuracy of the tester readings.

4. To prevent damage to tester or components, the inlet and the outlet hoses must be properly connected, and not reversed (tester with pressure and flow capabilities).

5. To minimize the possibility of damaging components, completely open the load valve by turning it counterclockwise (tester with pressure and flow capabilities).

6. Install fittings finger tight, far enough to insure that they are not cross-threaded, before tightening with a wrench.

7. Position the tester hoses so that rotating machine parts will not make contact with them and result in hose or tester damage.

8. Check the oil level in the reservoir.

9. Check the control linkage for improper adjustment, binding or broken parts.

10. All hydraulic tests should be made with the hydraulic oil at normal operating temperature.

TEST NO. 1: Traction Circuit Charge Pressure

1. Make sure hydraulic oil is at normal operating temperature by operating the machine for approximately 10 minutes.

2. Park the machine on a level surface, engage the parking brake and stop the engine.

CAUTION

To prevent possible personal injury from rotating drive shaft, engine must be OFF before attempting to connect gauge. If gauge has a hose attached, be careful to route hose so it will not contact the drive shaft.

3. Connect a 1000 PSI gauge onto charge pressure test port (Fig. 17).

4. Start the engine and put throttle at full engine RPM (approx. 3200 RPM) with no load on the system.

GAUGE READING TO BE 150 ± 30 PSI.

5. If there is no pressure, or pressure is low, check for restriction in pump intake line. Inspect charge relief valve and valve seat. Charge pressure can be adjusted by changing shim thickness behind the spring. Check for sheared charge pump key. Disassemble charge pump and check for internal damage or worn parts.

6. Also take a gauge reading while operating the machine in forward and reverse. Start the engine and put throttle at full engine RPM (approx. 3200 RPM). Apply the brakes and push the traction pedal forward, then reverse.

GAUGE READING TO BE 150 ± 30 PSI.

7. If pressure is good under no load, but drops below specification when under traction load, the piston pump and motor should be suspected of wear and inefficiency. When the pump and/or motor is worn or damaged the charge pump is not able to keep up with the internal leakage.

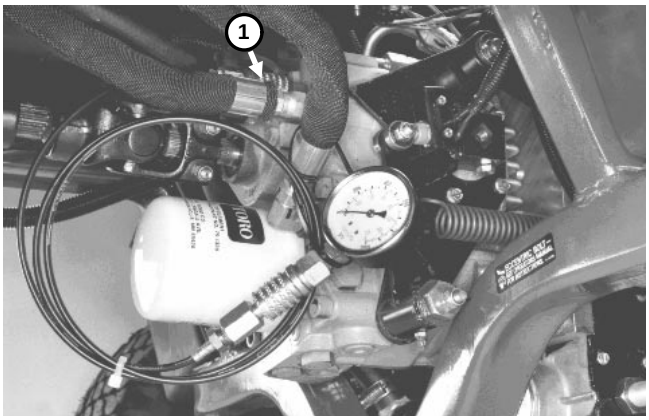

Figure 17

1. Charge pressure test port

TEST NO. 2: Traction Circuit System Pressure

1. Make sure hydraulic oil is at normal operating temperature by operating the machine for approximately 10 minutes.

2. Before doing traction pressure test:

A. Drive machine to an open area, lower cutting units, turn the engine off and engage the parking brake.

B. If testing forward function, connect a chain to the rear frame tie-down brackets. Connect the other end of the chain to an immovable object and remove all slack from the chain. If testing reverse function, attach chain to the center of the front frame member (Fig. 7).

CAUTION

To prevent possible personal injury from rotating drive shaft, engine must be OFF before attempting to connect gauge. If gauge has a hose attached, be careful to route hose so it will not contact the drive shaft.

3. Connect a 5,000 psi gauge to traction circuit test port for function to be checked (Fig. 18).

NOTE: Test ports are 7/16-20 SAE O-ring ports.

4. Start the engine and move throttle to full speed (approx. 3200 RPM).

5. Sit on seat, and with brakes locked, slowly depress the top of traction pedal. While pushing top of traction pedal down, look at pressure reading on gauge.

GAUGE READING:
Two-wheel drive (2WD) forward: 2750 ± 150 PSI
Four-wheel drive (4WD) forward: 3200 ± 150 PSI
Reverse (2WD and 4WD): 2750 ± 150 PSI

6. If traction pressure is too low, inspect check/high pressure relief valves. If problem occurs in one direction only, interchange the check/relief valves to see if the problem changes to the other direction (see NOTE below). Clean or replace valves as necessary. These cartridge type valves are factory set, and are not adjustable. If check/relief valves are in good condition, replace or overhaul transmission.

NOTE: The forward and reverse check/high pressure relief valves are different. One valve cartridge has a machined groove on seating surface and must be installed in the “reverse” port (see Check and High Pressure Relief Valves in Transmission Repairs section).

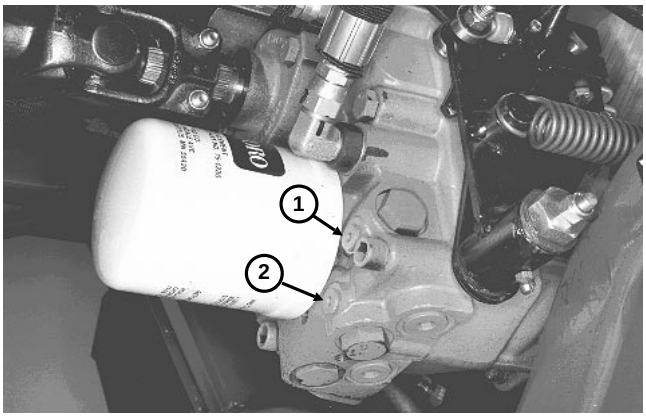

Figure 18

1. FORWARD test port **2. REVERSE test port**

TEST NO. 3: Front Mow / Lift Circuit Pressure

1. Make sure hydraulic oil is at normal operating temperature by operating the machine for approximately 10 minutes.

2. Lower cutting units, engage parking brake and stop the engine.

3. Raise seat to get access to hydraulic test fittings. Remove access cover from in front of hydraulic valve block. Install a 5000 PSI gauge with extension hose onto quick disconnect fitting in port G1 (Fig. 19). Put gauge and hose through opening in front of hydraulic valve block as shown, then lower the seat (Fig. 19A).

NOTE: It may be necessary to rotate 90° fitting in port G1 so seat can be lowered after pressure gauge with extension hose is connected. Loosen nut and rotate 90° fitting in port G1 1/4 turn so test fitting points to the right. Tighten nut to seat o-ring and secure fitting.

4. Sit on the seat and start the engine. Move throttle to full speed (approx. 3200 RPM).

5. While sitting on the seat, pull "Lower-Mow/Raise" control lever back to the RAISE position to lift the cutting units. Hold the lever in the RAISE position while looking at the gauge.

GAUGE READING TO BE 3000 ± 50 PSI.

NOTE: Normal operating pressure when mowing is approximately 500 to 600 PSI per cutting unit. Normal operating pressure of front circuit (three cutting units) when mowing is approximately 1500 to 1800 PSI.

6. Stop the engine. If pressure is too high, remove cap on relief valve R1 and adjust screw to get correct pressure (Fig. 20c). If pressure is too low, check for restriction in pump intake line. Remove cap from relief valve R1 and adjust screw to get correct pressure. If pressure is still too low, pump or lift cylinder(s) should be suspected of wear, damage or inefficiency.

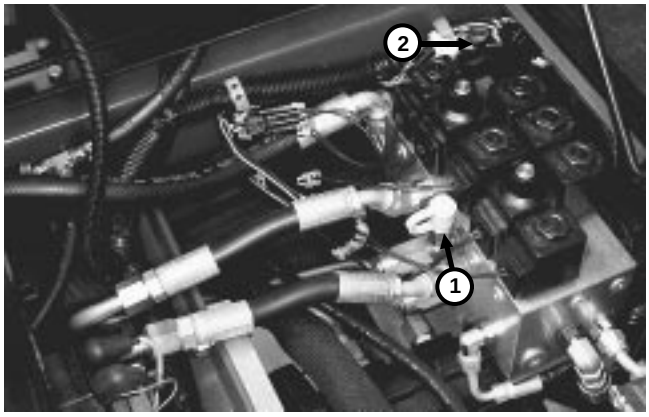

Figure 19

1. Test port G1 **2. Test port G2**

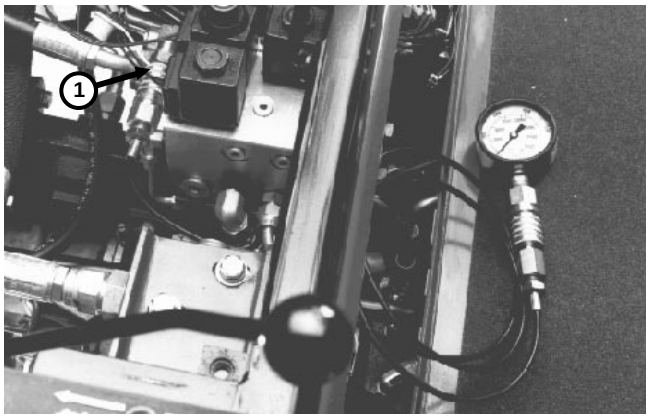

Figure 19A

1. Test port G1

TEST NO. 4: Rear Mow Circuit Pressure

1. Make sure hydraulic oil is at normal operating temperature by operating the machine for approximately 10 minutes.

2. Lower cutting units, engage parking brake and stop the engine. Set HOC Selector Knob, located under the instrument panel, to position A (full speed). Make sure Backlap switch is OFF.

3. Raise seat to get access to hydraulic test fittings. Remove access cover from in front of hydraulic valve block. Install a 5000 PSI gauge with extension hose onto quick disconnect fitting in port G2. Put gauge and hose through opening in front of hydraulic valve block as shown, then lower the seat (Fig. 20a).

NOTE: It may be necessary to rotate 90° fitting in port G2 so seat can be lowered after pressure gauge with extension hose is connected. Loosen nut and rotate 90° fitting in port G2 1/4 turn so test fitting points forward. Tighten nut to seat o-ring and secure fitting.

4. With cutting units in lowered position and engine OFF, insert a block of wood, as shown in Figure 20b, between cutting unit reel blades and front cross tube of **left-rear (No. 2)** cutting unit to prevent reel from turning.

5. Sit on the seat and start the engine. Move throttle to full speed (approx. 3200 RPM).

WARNING

Keep away from reels during test to prevent personal injury from rotating reel blades.

6. While sitting on seat, move “Enable/Disable” switch to ENABLE. Move “Lower-Mow/Raise” lever forward to engage cutting units, then look at the gauge.

GAUGE READING TO BE 2000 ± 50 PSI.

NOTE: Normal operating pressure when mowing is approximately 500 to 600 PSI per cutting unit. Normal operating pressure of rear circuit (two cutting units) when mowing is approximately 1000 to 1200 PSI.

7. Stop the engine. If pressure is too high, remove cap on relief valve R2 and adjust screw to get correct pressure (Fig. 20c). If pressure is too low, check for restriction in pump intake line. Remove cap from relief valve R2 and adjust screw to get correct pressure. If pressure is still too low, pump or motor should be suspected of wear, damage or inefficiency.

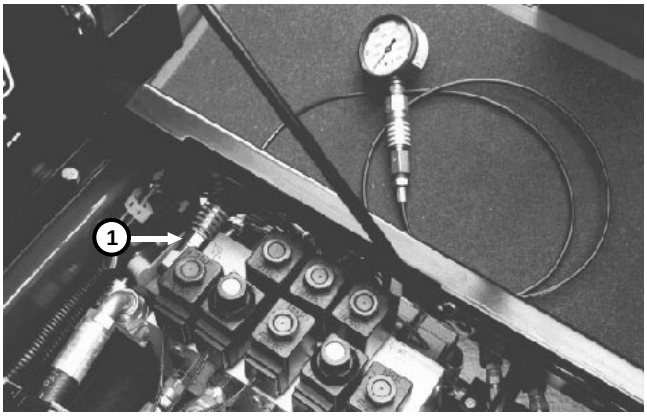

Figure 20a

1. Test port G2

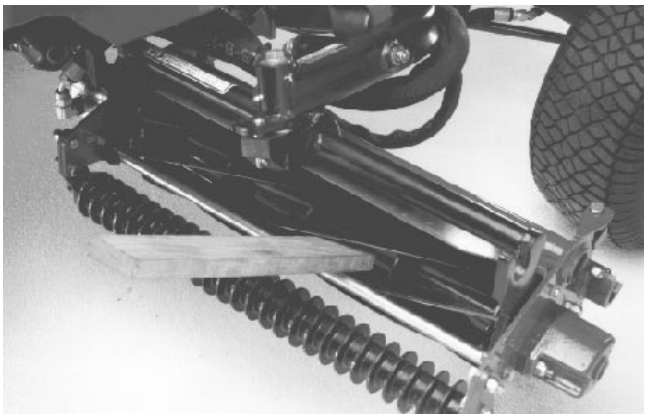

Figure 20b

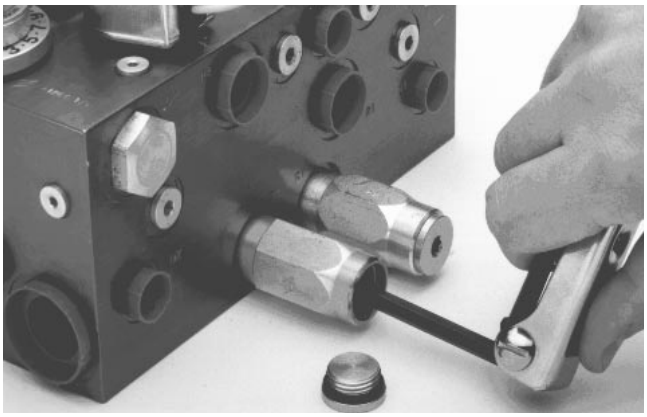

Figure 20c
(Adjusting R2 shown)

TEST NO. 5: Reel Drive Pump Efficiency
(Using Tester With Pressure and Flow Capabilities)

1. Make sure hydraulic oil is at normal operating temperature by operating the machine for approximately 10 minutes.

2. Lower cutting units, engage parking brake and stop the engine.

3. With the engine off and cutting units lowered, install tester in series between pressure hose and valve block fitting for suspected bad pump section (Fig. 21). Make sure the tester flow control valve is OPEN.

Front circuit – port P1
Rear circuit – port P2

IMPORTANT: Make sure that the oil flow indicator arrow on the flow gauge is showing that the oil will flow from the pump, through the tester and into the valve block.

IMPORTANT: The pump is a positive displacement type. If pump flow is completely restricted or stopped, damage to the pump, tester or other components could occur.

4. Make sure the parking brake is engaged. Start the engine and move throttle to full speed (approx. 3200 RPM). DO NOT engage the cutting units.

5. While watching pressure gauges, slowly close flow control valve until 2000 PSI is obtained on gauge.

TESTER READING: Flow not less than 3.5 GPM at 2000 PSI.

6. Stop the engine. If flow was lower than 3.5 GPM or a pressure of 2000 PSI cannot be obtained, check for restriction in pump intake line. If not restricted, remove pump and repair or replace as necessary.

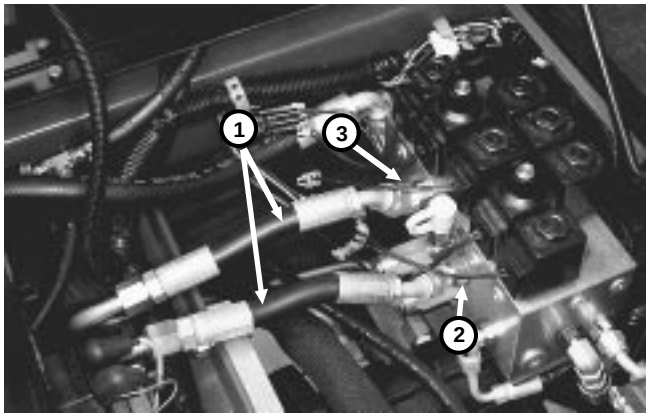

Figure 21

1. Pressure hose
2. Port P1
3. Port P2

TEST NO. 6: Reel Drive Circuit Flow

(Using Tester With Pressure and Flow Capabilities)

1. Make sure hydraulic oil is at normal operating temperature by operating the machine for approximately 10 minutes.

2. Lower cutting units, engage parking brake and stop the engine.

3. Set HOC Selector Knob, located under the instrument panel, to position A (full speed). Make sure backlap switch is OFF.

4. Install tester in series between pressure hose and motor fitting on suspected bad circuit (Fig. 22). Make sure the tester flow control valve is OPEN.

Tester Location:
Front circuit – left-front (No. 4) cutting unit.
Rear circuit – left rear (No. 2) cutting unit

IMPORTANT: Make sure that the oil flow indicator arrow on the flow gauge is showing that the oil will flow from the valve block, through the tester and into the motor.

5. One person should sit on the seat and operate the machine while another person watches the gauges.

6. Make sure the parking brake is engaged. Start the engine and move throttle to full speed (approx. 3200 RPM).

CAUTION

Cutting unit reels will rotate when lowered with Enable/Disable switch in ENABLE position. Keep away from reels during test to prevent personal injury from rotating reel blades. Do not stand in front of the machine.

7. Move “Enable/Disable” switch to ENABLE. Move “Lower-Mow/Raise” lever forward to engage the cutting units. While watching pressure gauges, slowly close flow control valve until pressure specified below is obtained.

TESTER READINGS:
Front – flow not less than 3.5 GPM at 2300 PSI.
Rear – flow not less than 3.5 GPM at 1500 PSI.

8. Stop the engine. If pressure or flow is too low, inspect relief valve (R1 or R2) for contamination or wear. Inspect flow control valve (VS1 or VS2) for restriction. Check spool travel of S7. Check spool travel of S8 or S9.

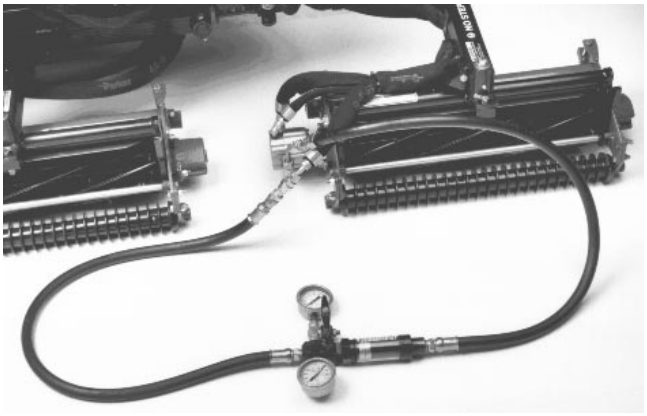

Figure 22

TEST NO. 7: Reel Drive Motor Efficiency

Reel drive motor efficiency can be tested by blocking outlet flow from the motor, then measuring flow from the motor case drain line. Use a graduated container, such as special tool TOR4077 to measure flow from the motor case drain line over a 15 second time period (Fig. 23b). Use the chart to determine the flow (Fig. 23c).

1. Make sure hydraulic oil is at normal operating temperature by operating the machine for approximately 10 minutes.

2. Lower cutting units, engage parking brake and stop the engine.

3. Disconnect the motor case drain hose (small diameter hose) where it connects to traction unit (not at the motor). Put a steel cap on the fitting at the traction unit. leave the case drain hose open (Fig. 23a)

4. Disconnect hose from outlet of motor to be tested. Put a steel cap on the motor fitting. Put a steel plug in the disconnected hose (Fig. 23a).

5. Set HOC Selector Knob, located under the instrument panel, to position A (full speed). Make sure Backlap switch is OFF.

CAUTION

Cutting unit reels will rotate when lowered with Enable/Disable switch in ENABLE position. Keep away from cutting units during test to prevent personal injury from rotating reel blades. Do not stand in front of the machine.

6. Sit on the seat and start the engine. Move throttle to full speed (approx. 3200 RPM). Move “Enable/Disable” switch to ENABLE. Move “Lower-Mow/Raise” lever forward to engage cutting units. Have another person measure flow from the case drain line for 15 seconds, then move the switch to DISABLE and stop the engine.

TEST RESULTS: Flow not more than 0.5 GPM.

7. If flow is more than 0.5 GPM motor is worn or damaged and should be repaired or replaced.

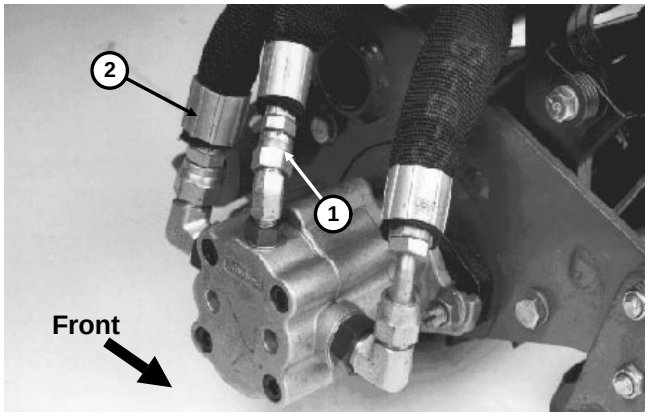

Figure 23a

1. Case drain hose **2. Outlet hose**



Figure 23b
This illustration shows flow being blocked by closing flow restrictor valve on a flow meter

GPM	Milliliters in 15 sec.	Ounces in 15 sec.
.1	95	3.2
.2	189	6.4
.3	284	9.6
.4	378	12.8
.5	473	16.0
.6	568	19.2
.7	662	22.4
.8	756	25.6
.9	852	28.8
1.0	946	32.0

Figure 23c

Traction Control Neutral Adjustment

The machine must not “creep” when traction pedal is released. If it does creep, an adjustment is required.

1. Park machine on a level surface, lower cutting units and shut engine off. Depress only the right brake pedal and engage the parking brake.

2. Jack up left side of machine until front tire is off the shop floor. Support machine with jack stands to prevent it from falling accidentally.

3. Under right side of transmission, loosen locknut on traction adjustment cam (Fig. 24).

CAUTION

Engine must be running so final adjustment of the traction adjustment cam can be performed. To guard against possible personal injury, keep hands, feet, face and other parts of the body away from the muffler, other hot parts of the engine, and rotating parts.

4. Start the engine and run at low idle. Rotate cam hex in either direction (keeping large offset portion of cam hex in rear 180° position) until wheel is not rotating.

5. Tighten locknut to secure adjustment.

6. Stop the engine and release the right brake. Remove jack stands and lower the machine to the shop floor. Test drive the machine to make sure it does not creep.

Neutral Return Spring Adjustment

1. On a large, flat, open area drive the machine at full throttle and full traction speed.

2. Remove foot from traction pedal and measure distance required for machine to come to a stop.

3. If distance required to stop is greater than 18 feet (5.5 meters) an adjustment is required.

4.To adjust, park machine on a level surface, lower cutting units to floor and shut engine off.

5. Connect brake pedals together with locking pin, push both pedals down and pull parking brake latch out.

6. Loosen outer hex nut securing eye bolt to spring anchor plate.

7. Turn inner locknut clockwise until distance between inside of eye bolt loop and inside of spring anchor plate is shortened 1/8 inch, as shown in Figure 24A. Tighten outer hex nut.

8. Operate machine and check stopping distance. Repeat procedure if necessary.

NOTE: Shortening distance between inside of eyebolt loop and inside of spring anchor plate increases pedal force on traction pedal. Do not over adjust.

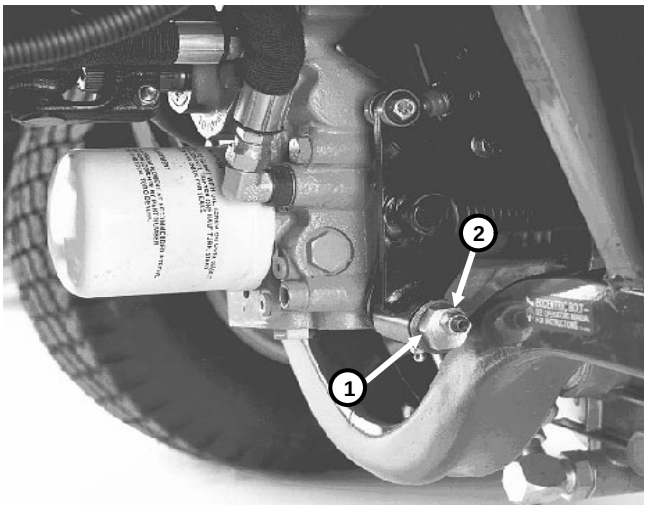

Figure 24

1. Traction adjustment cam
2. Locknut

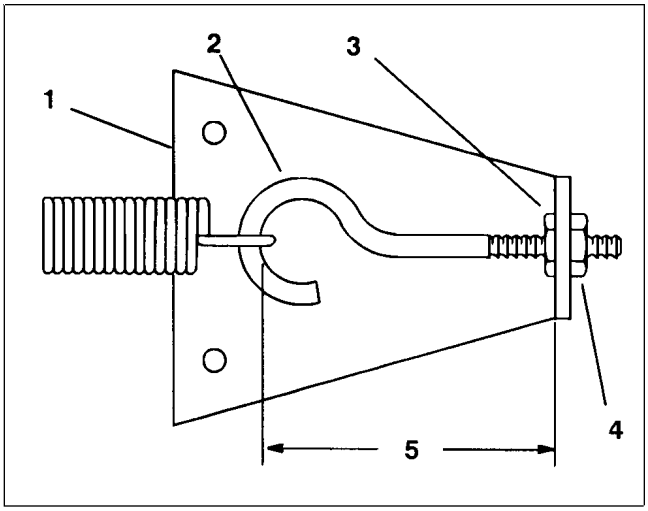

Figure 24A

1. Spring anchor plate
2. Eye bolt
3. Inner locknut
4. Outer hex nut
5. Shorten distance to decrease stop time

Lift Circuit Variable Orifice Adjustment

Adjustable orifices are adjusted at the factory and should not require adjustment unless tampered with or in special situations.

Opening valve increases lift speed. Closing valve slows lift speed.

NOTE: Adjustment for special operating conditions should not require more than 1/2 turn of valve in either direction from initial adjustment.

Front Center Initial Adjustment (Fig. 25)

This adjustment affects the front center (No. 1) cutting unit only. Loosen set screw. Turn valve clockwise to fully closed position. Turn valve counterclockwise (open) 2-1/2 turns. Secure adjustment by tightening set screw.

Rear Initial Adjustment (Fig. 26)

Loosen set screw. Turn valve clockwise to fully closed position. Turn valve counterclockwise (open) 2-1/4 turns. Secure adjustment by tightening set screw.

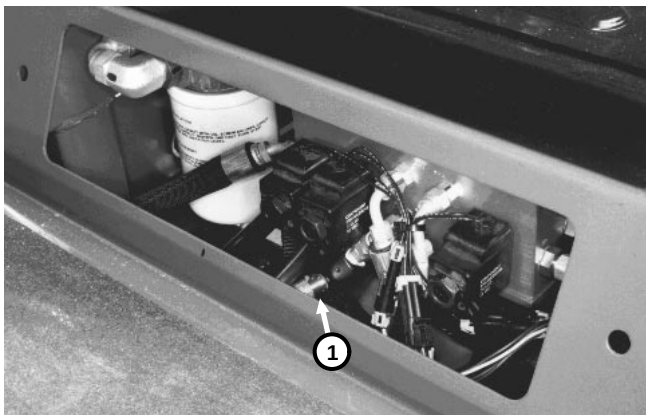

Figure 25

1. Front center adjustable orifice

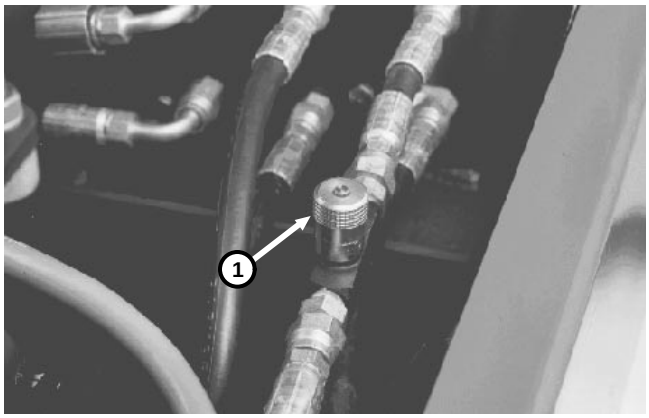

Figure 26

1. Rear circuit adjustable orifice

Shaft Seal Replacement

1. Park the machine on a level surface, lower cutting units, engage parking brake and stop the engine.

2. Disconnect the drive shaft from the transmission (Fig 27).

3. Remove retaining ring, then carefully remove seal from bore in charge pump cover (Fig. 28). The face of the seal my be punctured with a sharp instrument (such as a screwdriver) to aid in prying the seal out, or a slide hammer type puller may be used to remove the seal. Be careful to not damage the charge pump cover or shaft. Once removed the seal is not reusable.

4. Inspect the charge pump cover, new seal, and shaft for damage. Inspect sealing area on shaft for rust, wear or contamination. Polish seal area on shaft if necessary.

5. Use a seal installer tool or wrap spline end of shaft with thin plastic to prevent damage to seal lip during installation. Lubricate inside diameter of new seal with petroleum jelly.

6. Press new seal into charge pump cover, being certain the seal is perpendicular to the shaft. Be careful not to damage the seal. The outer face of the seal should be located between 0.056 to 0.096 in. below the outer surface of the charge pump cover. Install the retaining ring.

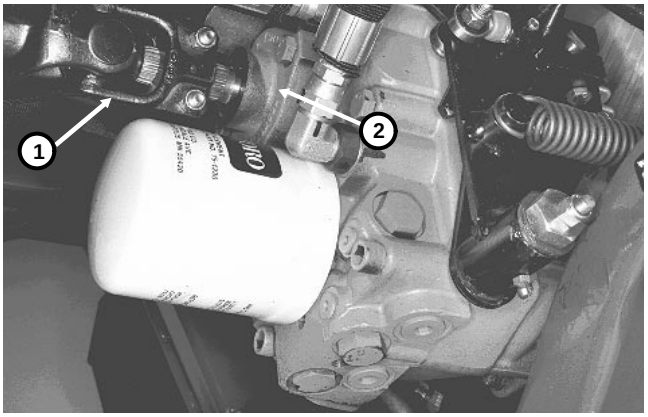

Figure 27

1. Drive shaft **2. Charge pump**

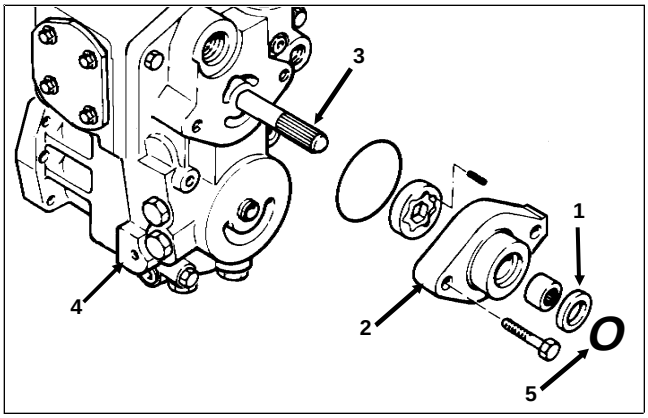

Figure 28

1. Seal
2. Charge pump cover
3. Shaft
4. Transmission
5. Retaining ring

Transmission Control Linkage Removal

1. Park the machine on a level surface, lower cutting units, engage parking brake and stop the engine.

2. Disconnect wiring harness from traction neutral switch (Fig. 29, 30).

3. Remove eybolt and extension spring.

4. Remove cotter pin and washer to disconnect traction control rod from pump control.

5. Loosen cap screw and lock nut securing pump control to swashplate control shaft. It is not necessary to disassemble transmission control assembly.

6. Remove four (4) capscrews securing traction plate to transmission housing. Remove transmission control assembly from transmission.

7. Reverse steps 2 - 6 to install transmission control linkage.

8. Do traction control neutral adjustment (see Adjustments section of this chapter).

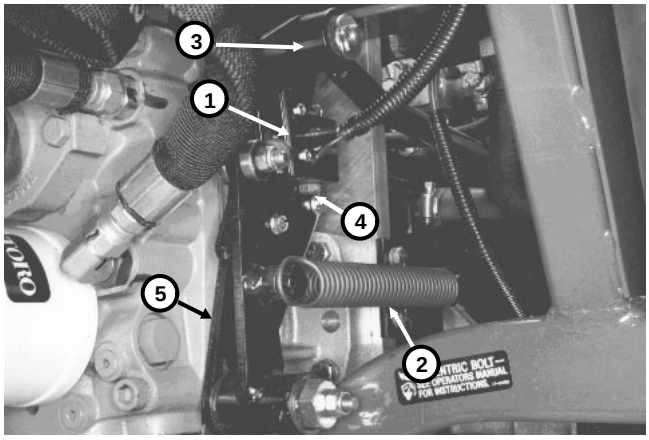

Figure 29

1. Traction neutral switch
2. Extension spring
3. Traction control rod
4. Capscrew & locknut
5. Traction plate

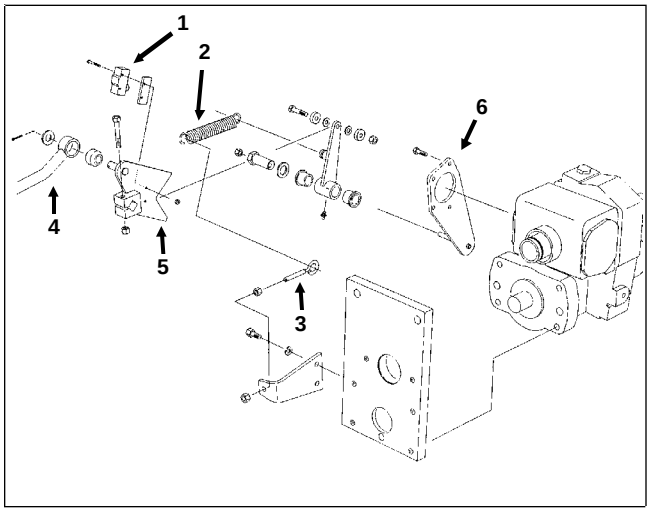

Figure 30

1. Traction neutral switch
2. Extension spring
3. Eyebolt
4. Traction control rod
5. Pump control
6. Traction plate

Trunnion Seal Replacement

1. Park the machine on a level surface, lower cutting units, engage parking brake and stop the engine.

2. Remove control linkage from swashplate control shaft on transmission (see Transmission Control Removal).

3. Remove hex tapping screws retaining trunnion seal cover to transmission housing (Fig. 31).

4. Remove trunnion seal cover with lip seal and o-ring.

5. Put seal cover in an arbor press and press out old seal. Once removed, the seal is not reusable.

6. Inspect seal cover for damage. Inspect sealing area on shaft for rust, wear, or contamination. Polish sealing area on shaft if necessary.

7. Using an arbor press, press seal into position from inside of seal cover until it bottoms out in its bore. Be careful not to damage the seal.

8. Install o-ring onto seal cover and retain with petroleum jelly.

9. Use a seal installer tool or wrap end of swashplate control shaft with thin plastic to prevent damage to seal during installation.

10. Slide seal cover assembly over swashplate control shaft onto housing. Install hex tapping screws and tighten to a torque of 6 to 9 ft-lbs.

11. Install control linkage onto transmission. Check machine for "creeping" when engine is running with foot pedal in neutral position. Do Traction Control Neutral Adjustment if necessary.

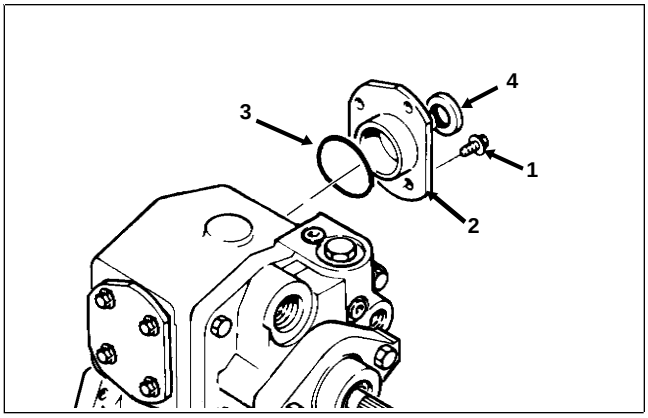

Figure 31

1. Hex tapping screw (4)
2. Trunnion seal cover
3. O-ring
4. Lip seal

Check and High Pressure Relief Valves

1. Park the machine on a level surface, lower cutting units, engage parking brake and stop the engine.

2. Remove the check/high pressure relief valve hex plug (Fig 32).

3. Remove the valve cartridge assembly. Inspect the valve and mating seat in the housing for damage or foreign material. It will be necessary to replace the center section if the seat is damaged.

IMPORTANT: The relief valves are factory set and should not be tampered with, except to replace the entire valve cartridge.

4. The valve cartridge is retained in the special plug by a circlip. The check valve spring may be removed from the special plug by pulling out at a slight angle. When reassembling, install the check valve spring into the special plug with its larger diameter toward the plug, and snap the valve cartridge into position in the plug.

NOTE: The forward and reverse valves are different. The seating surface of the “reverse” check/high pressure relief valve has a machined groove in it (Fig. 32). Installing the “reverse” check/high pressure relief valve in the wrong port may cause performance problems.

5. Reinstall the valve cartridges with o-rings into the housing and tighten the plugs to a torque of 30 to 50 ft-lb.

6. Before starting the engine check the oil level in the differential housing and add the correct oil as necessary. Start the engine and let it run for one to two minutes, then turn the engine off and check the oil level again. Check the transmission for leaks.

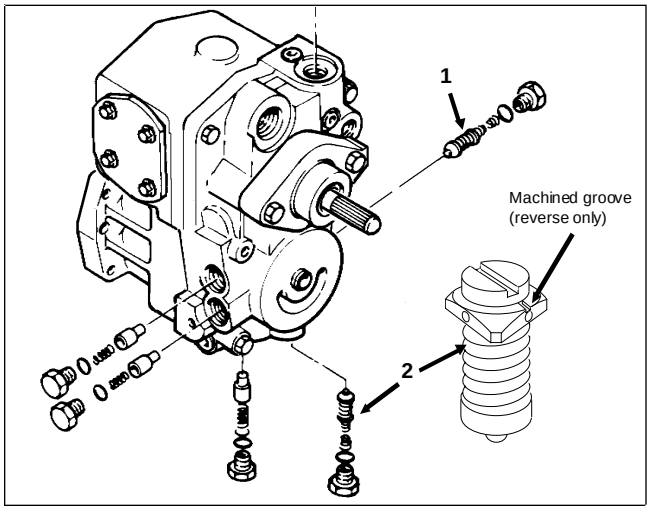

Figure 32

1. Forward check/high pressure relief valve
2. Reverse check/high pressure relief valve

Charge Pressure Relief Valve

1. Park the machine on a level surface, lower cutting units, engage parking brake and stop the engine.

2. Remove the charge relief valve hex plug (Fig. 33).

3. Remove the spring and poppet from the housing.

4. Do not interchange parts with another valve.

NOTE: The shim(s) which may be installed between the spring and plug may remain inside the plug, being held by an oil film. Make sure the same number and thickness of shims is installed when reassembling the parts unless shims need to be added or removed to adjust the pressure setting.

5. Inspect the poppet and mating seat in the end cap for damage or foreign material.

6. Reinstall the poppet, spring and plug (with shims and o-ring) into the housing. Tighten the plug to a torque of 30 to 70 ft-lb.

7. Before starting the engine check the oil level in the differential housing and add the correct oil as necessary. Start the engine and let it run for one to two minutes, then turn the engine off and check the oil level again. Check the transmission for leaks.

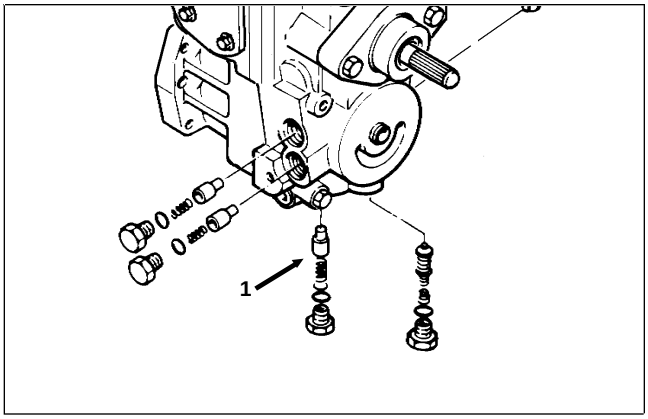

Figure 33

1. Charge pressure relief valve

Heat Exchanger Bypass Valve

1. Park the machine on a level surface, lower cutting units, engage parking brake and stop the engine.

2. Remove the heat exchanger bypass valve hex plug (Fig. 34).

3. Remove the spring and poppet from the housing.

4. Do not interchange parts with another valve. The spring used in the heat exchanger bypass valve is identified by a yellow dye mark, and requires a force of approximately 5.5 lb. to compress it to a length of 1.28 in.

5. Inspect the poppet and mating seat in the end cap for damage or foreign material.

6. Reinstall the poppet, spring and plug (with shims and o-ring) into the housing. Tighten the plug to a torque of 30 to 70 ft-lb.

7. Before starting the engine check the oil level in the differential housing and add the correct oil as necessary. Start the engine and let it run for one to two minutes, then turn the engine off and check the oil level again. Check the transmission for leaks.

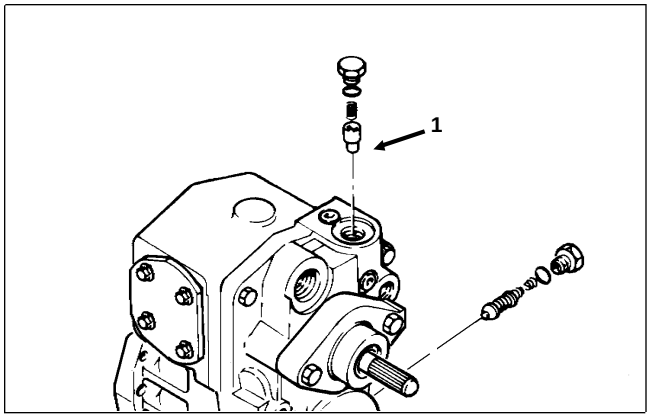

Figure 34

1. Heat exchanger bypass valve

Filter Bypass Valve

1. Park the machine on a level surface, lower cutting units, engage parking brake and stop the engine.

2. Remove the heat exchanger bypass valve hex plug (Fig. 35).

3. Remove the spring and poppet from the housing.

4. Do not interchange parts with another valve. The spring used in the heat exchanger bypass valve is identified by a red dye mark, and requires a force of approximately 2.2 lb. to compress it to a length of 1.28 in.

5. Inspect the poppet and mating seat in the end cap for damage or foreign material.

6. Reinstall the poppet, spring and plug (with shims and o-ring) into the housing. Tighten the plug to a torque of 30 to 70 ft-lb.

7. Before starting the engine check the oil level in the differential housing and add the correct oil as necessary. Start the engine and let it run for one to two minutes, then turn the engine off and check the oil level again. Check the transmission for leaks.

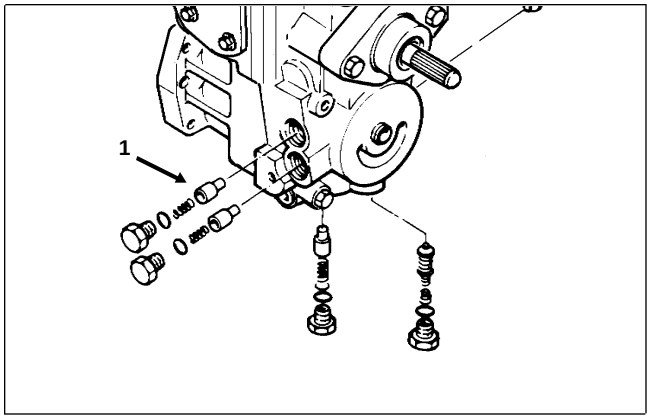

Figure 35

1. Filter bypass valve

Filter Bypass Reverse Flow Check Valve

1. Park the machine on a level surface, lower cutting units, engage parking brake and stop the engine.

2. Remove the heat exchanger bypass valve hex plug (Fig. 36).

3. Remove the spring and poppet from the housing.

4. Do not interchange parts with another valve. The spring used in the heat exchanger bypass valve is identified by a blue dye mark, and requires a force of approximately 0.3 lb. to compress it to a length of 1.28 in.

5. Inspect the poppet and mating seat in the end cap for damage or foreign material.

6. Reinstall the poppet, spring and plug (with shims and o-ring) into the housing. Tighten the plug to a torque of 30 to 70 ft-lb.

7. Before starting the engine check the oil level in the differential housing and add the correct oil as necessary. Start the engine and let it run for one to two minutes, then turn the engine off and check the oil level again. Check the transmission for leaks.

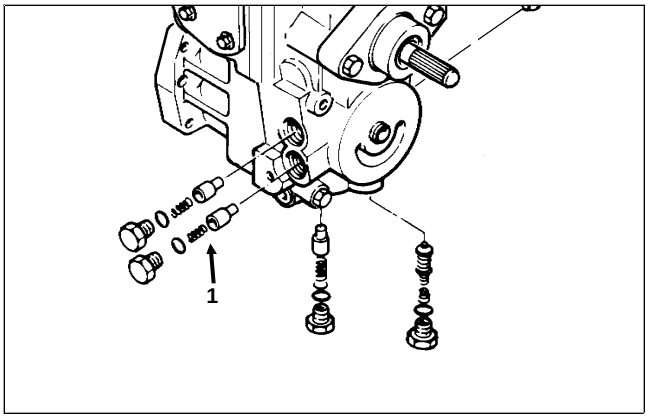

Figure 36

1. Filter bypass reverse flow check valve

Charge Pump

1. Park the machine on a level surface, lower cutting units, engage parking brake and stop the engine.

2. Remove the two (2) cap screws retaining the charge pump cover. Remove the charge pump (Fig. 37, 38).

3. Remove geroter drive pin from the groove in the shaft.

4. Remove the geroter assembly from the charge pump cover. Remove the shaft seal from the cover.

5. Each part should be inspected separately if they are to be reused. If either of the geroter assembly parts needs to be replaced, they should both be replaced. Always replace the o-ring.

6. Inspect the shaft bearing in the charge pump cover for wear or damage. If replacement is necessary, remove the needle bearing from the cover using a suitable puller. Press a new needle bearing into the cover using a suitable press pin. When installed correctly, the bearing cage will be flush to 0.02 in. below the surface of the seal counterbore in the front of the cover.

IMPORTANT: When installing the needle bearing, the printed (numbered) end of the bearing cage must face the press pin.

7. Install the geroter drive pin in the groove in the drive shaft, and retain with petroleum jelly.

8. Before assembly, lubricate the geroter assembly with clean hydraulic oil. Install the geroter assembly into the charge pump cover. Install the o-ring and retain with petroleum jelly.

IMPORTANT: Correct charge pump installation to match engine rotation is determined by the position of the charge pump cover on the transmission housing. To prevent damage to transmission from lack of replenishing oil from charge pump, the flat on the charge pump cover must be on the right (toward the heat exchanger ports).

9. With the flat on the charge pump cover to the right, install the charge pump assembly over the drive shaft and onto the transmission housing. Make sure the geroter engages the drive pin in the shaft.

10. Tighten the charge pump cover cap screws to a torque of 27 to 37 ft-lb.

11. Install a new shaft seal (see Shaft Seal Replacement).

12. Before starting the engine, check the oil level in differential housing and add the correct oil as necessary. Start the engine and let it run for one to two minutes, then turn the engine off and check the oil level again. Check the transmission for leaks.

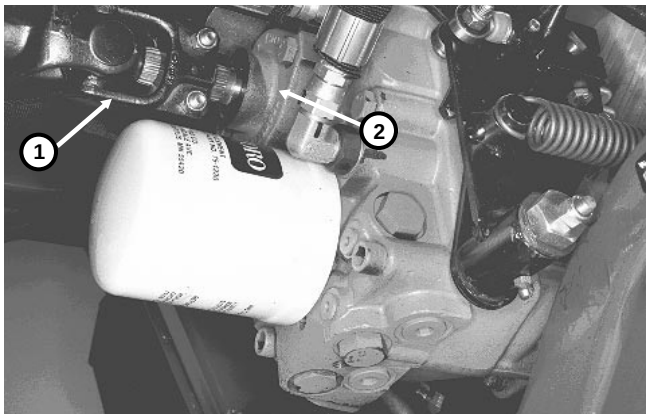

Figure 37

1. Drive shaft **2. Charge pump**

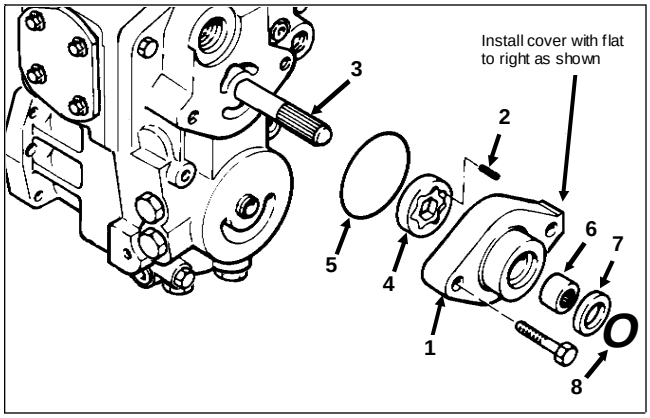

Figure 38

1. Charge pump cover
2. Drive pin
3. Pump shaft
4. Geroter assembly
5. O-ring
6. Needle bearing
7. Shaft seal
8. Retaining ring

Transmission Removal and Installation

1. Park machine on a level surface, lower cutting units, engage parking brake and stop the engine.

2. Remove the two (2) rear cutting units (see Chapter 8 - Cutting Units).

3. To prevent contamination of hydraulic system during removal, thoroughly clean exterior of transmission and differential.

4. Put a drain pan below the transmission. Remove suction line from bottom of transmission to let oil drain out of differential (Fig. 39).

5. Remove control linkage from swashplate control shaft on transmission (see Transmission Control Removal).

6. Remove hydraulic hoses and fittings connected to transmission. Put plugs or caps on disconnected hydraulic hoses to prevent contamination of the system. Put plugs in open ports of transmission.

7. Disconnect drive shaft from transmission (Fig. 39).

8. Support the transmission to prevent it from falling while carefully removing four (4) capscrews and locknuts retaining transmission to support plate. Carefully pull transmission off of support plate and lower it out of the machine (Fig. 40).

NOTE: If the machine is going to be stored until transmission is repaired or replaced, cover hole in support plate with weatherproof tape to prevent contamination of the reservoir.

9. Leave support plate installed and auxiliary pump installed on support plate.

10. Remove retaining ring and remove pinion gear from transmission output shaft.

11. Remove filter from transmission.

12. Before installing transmission, install new o-ring seal where transmission mates with support plate. Reverse steps 2 - 10 to install transmission.

13. Install a new filter and fill differential with correct oil.

14. Disconnect fuel stop solenoid electrical connector on engine to prevent engine from starting. Prime transmission by turning ignition key switch to crank engine for 10 seconds. Repeat cranking procedure again.

15. Start the engine and let it idle for approximately two minutes. Operate machine slowly in forward and reverse. Stop engine and check differential oil level. Check transmission for leaks.

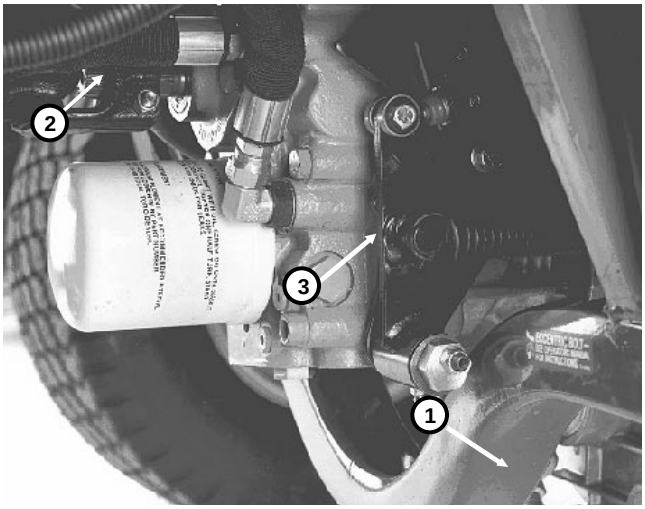

Figure 39

1. Suction line
2. Drive shaft
3. Control linkage assembly

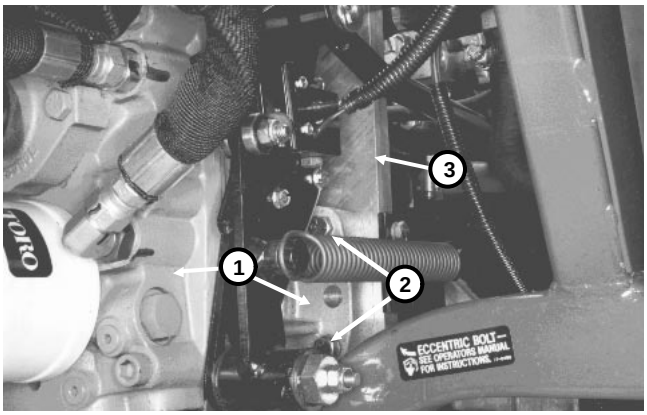

Figure 40

1. Transmission
2. Cap screws and locknuts (4)
3. Support plate

Disassembly of Transmission

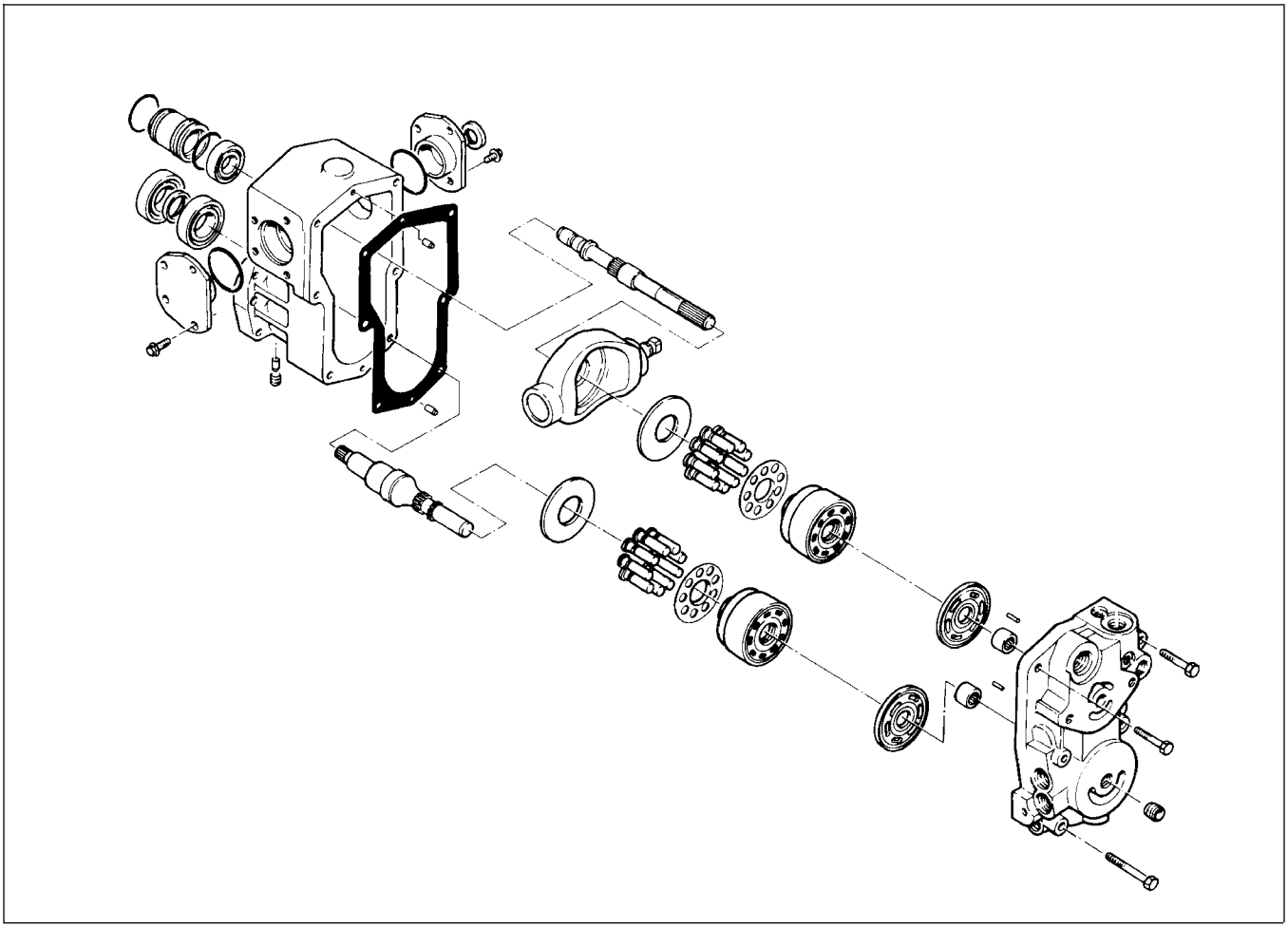

Figure 41

The procedures on the following pages are for the complete disassembly and reassembly of the transmission.

Cleanliness is a primary means of assuring satisfactory transmission life, on either new or repair units. Cleaning parts by using a clean solvent wash and air drying is usually adequate. As with any precision equipment, all parts must be kept free of foreign materials and chemicals. Protect all sealing surfaces and open cavities from damage and foreign material.

During assembly of the transmission, all surfaces which have relative motion between two parts should be coated with a film of clean hydraulic oil. This will assure that these surfaces will be lubricated during start-up.

It is recommended that all gaskets, o-rings and seals be replaced. Lightly lubricate all o-rings with clean petroleum jelly before assembly. All gasket sealing surfaces must be cleaned before installing new gaskets.

1. Before performing major repairs on the transmission, remove external components as described in previous procedures. These include the following:

Charge Check / High Pressure Relief Valves
Charge Relief Valve
Heat Exchanger Bypass Valve
Filter Bypass Valve
Filter Bypass Reverse Flow Check Valve
Charge Pump

2. Remove six (6) screws which retain center section to housing (Fig. 42). Note position of longer and shorter screws. The cylinder block springs will cause the center section to separate from the housing.

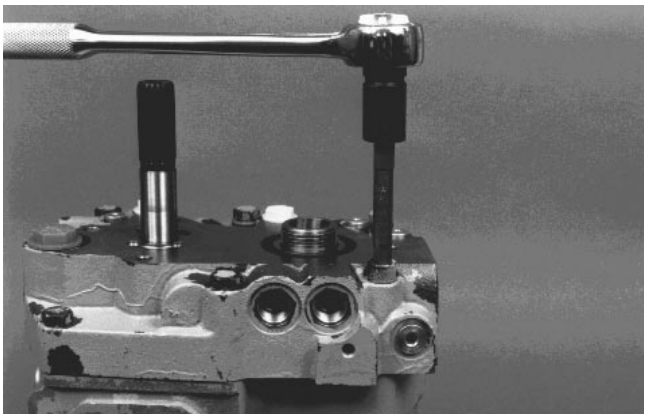

Figure 42

3. Remove center section from housing (Fig. 43).

IMPORTANT: The pump and motor cylinder blocks may stick to the valve plates and center section. Be careful to prevent damage to the sealing surfaces.

4. Remove gasket and two (2) alignment pins from housing.

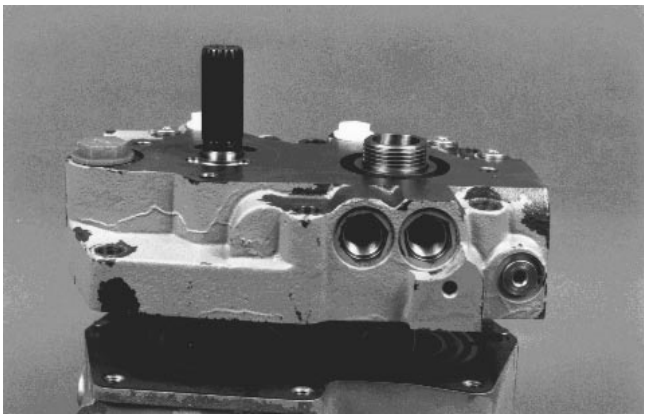

Figure 43

5. Carefully remove valve plates from center section (Fig. 44). It may be necessary to pry valve plates off with a small screwdriver.

IMPORTANT: Be careful not to damage valve plate and center section surfaces.

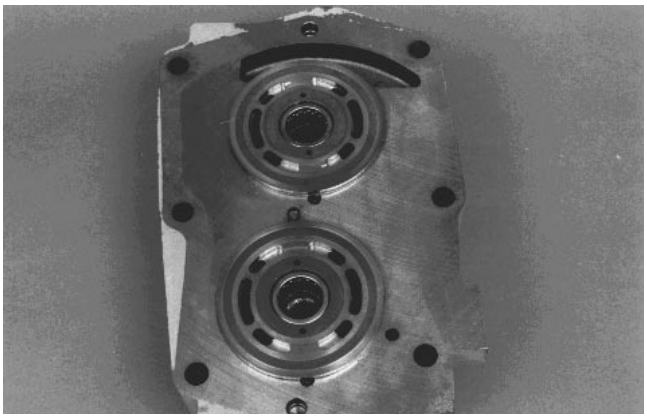

Figure 44

6. Remove valve plate pins from center section (Fig. 45).

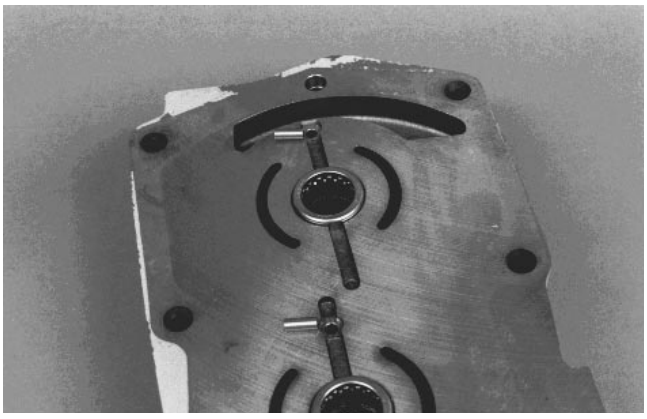

Figure 45

7. Lay transmission on its side and remove motor cylinder block assembly from the housing. Remove pump cylinder block assembly from pump shaft (Fig. 46).

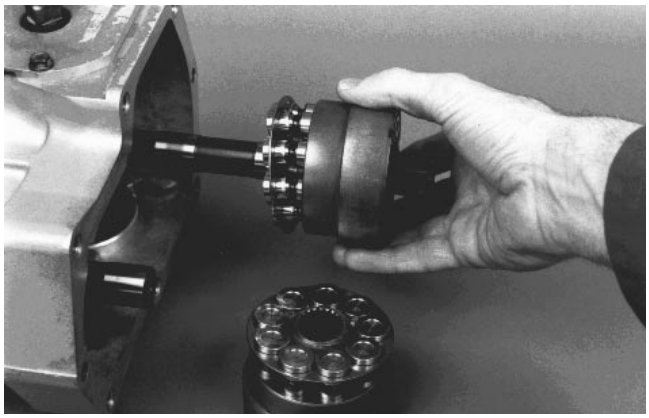

Figure 46

8. Remove the slipper guide and piston assemblies from cylinder blocks (Fig. 47).

NOTE: Pump and motor cylinder block assemblies are identical. To avoid mixing wear patterns, do not mix parts between pump and motor cylinder block assemblies.

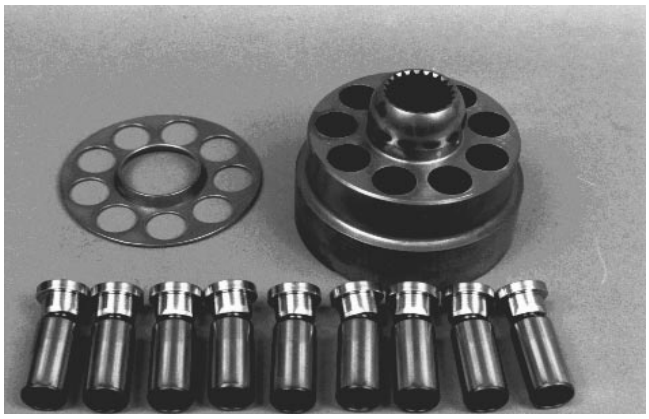

Figure 47

9. Use an o-ring pick or wire to remove thrust plates from swashplate and housing (Fig. 48).

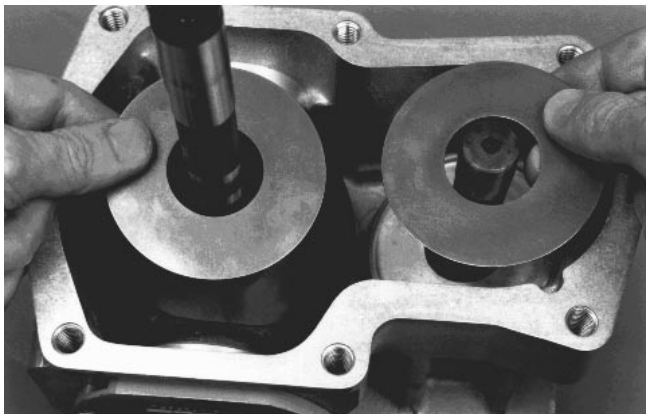

Figure 48

10. Use an internal hex wrench to remove pipe plug over motor shaft bearing retaining pin (Fig. 49).

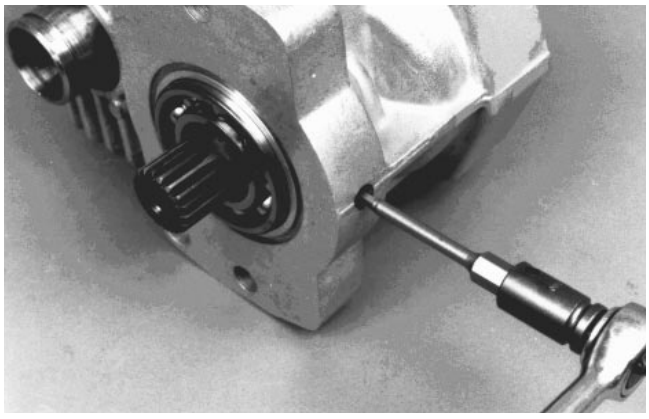

Figure 49

11. Use an 8-32 machine screw to remove motor shaft bearing retaining pin from housing (Fig. 50).

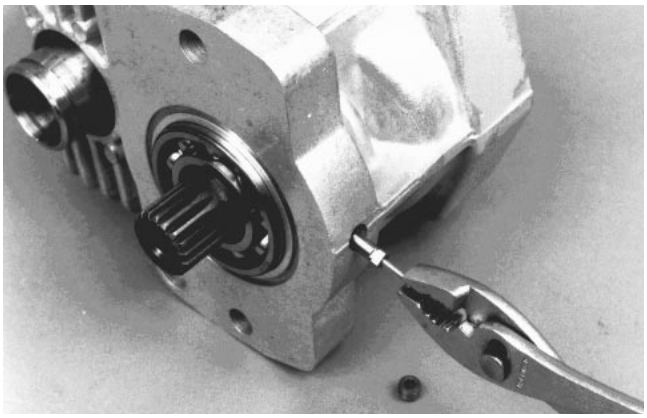

Figure 50

12. Remove motor shaft from housing (Fig. 51).

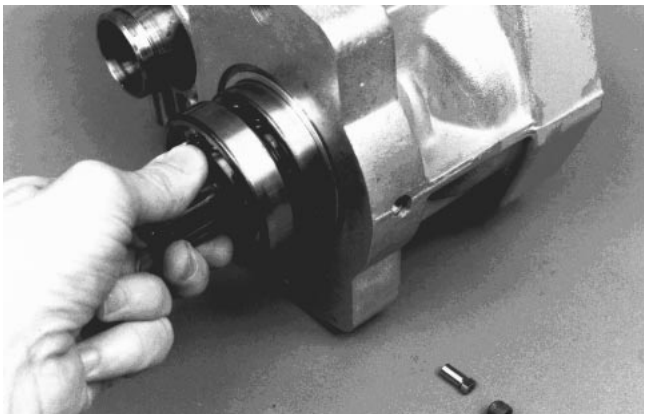

Figure 51

13. Press motor shaft out of bearings and spacer (Fig. 52).

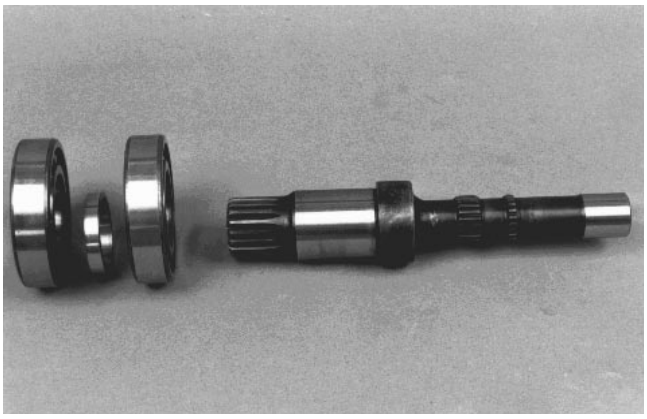

Figure 52

14. Remove spiral retaining ring and remove PTO seal guide (with o-ring) from the housing (Fig. 53).

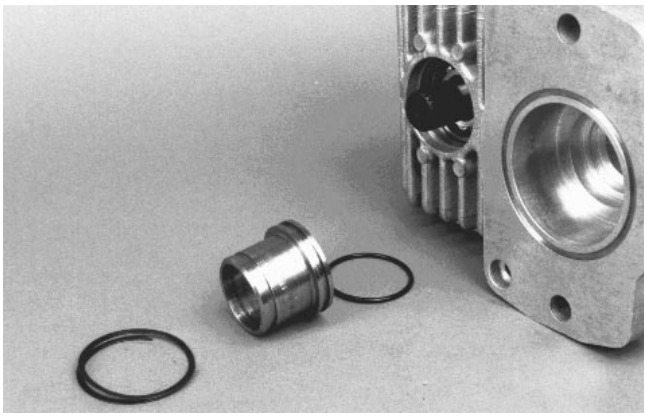

Figure 53

15. Slide pump shaft and bearing assembly from housing. Press shaft out of bearing (Fig. 54).

16. Remove hex tapping screws retaining trunnion seal cover and trunnion cover to housing (Fig. 55). Mark position of covers for reassembly. The trunnion seal cover assembly includes an o-ring, lip seal and trunnion bearing on the control side. The trunnion cover assembly includes an o-ring and trunnion bearing on the side opposite the control. Remove these parts from the housing.

17. Tilt and lift swashplate from housing (Fig. 56).

Inspection and Replacement of Parts

After disassembly, thoroughly clean all parts in a suitable solvent. Replace all o-rings, gaskets and seals.

Inspect all parts for damage, nicks or unusual wear patterns. Replace all parts having unusual or excessive wear or discoloration.

If scratches, which can be felt with a pencil lead, can be found on bronze surface of valve plates or running surface of cylinder blocks, polish or replace the parts.

Inspect needle bearings in center section. If replacement is necessary, remove shaft needle bearings using a suitable puller. Do not damage valve plate surface of center section.

Press new needle bearings into center section using a suitable press pin. When installed correctly, bearing cage will protrude from 0.09 to 0.11 in. from surface of center section to serve as pilots for valve plates (Fig. 57).

IMPORTANT: When installing the needle bearing, the printed (numbered) end of the bearing cage must face the press pin.

Install a new cylinder block kit if brass slippers on pistons are scored or excessively rounded at edges.

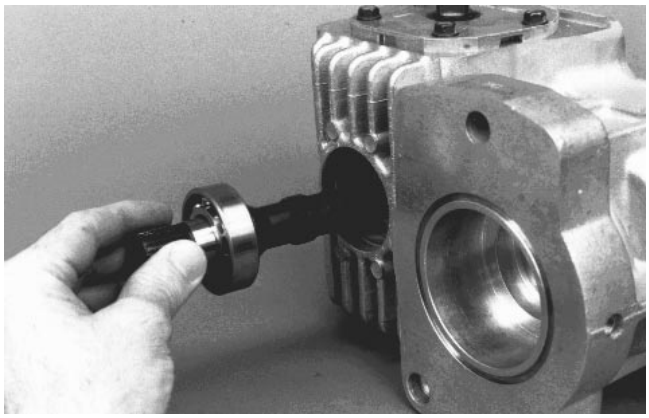

Figure 54

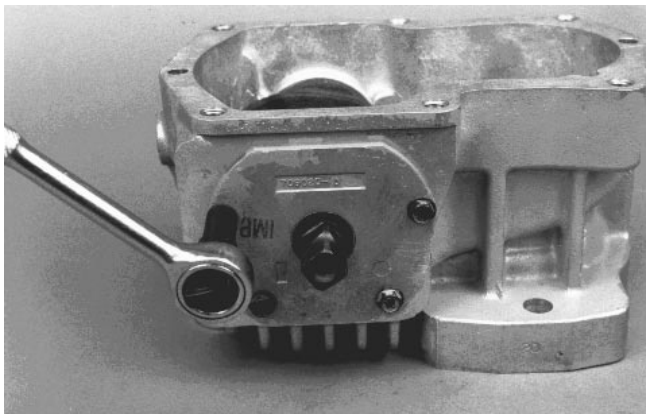

Figure 55

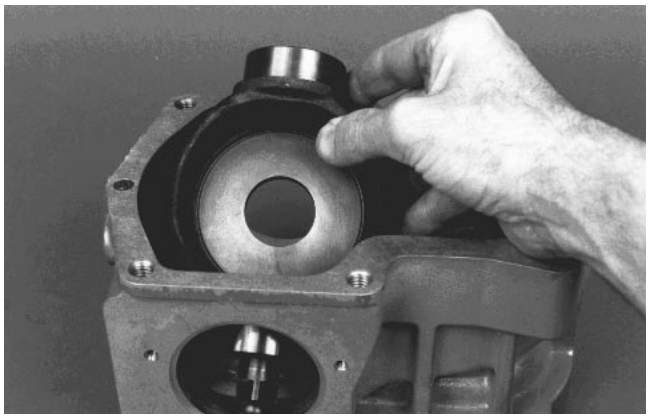

Figure 56

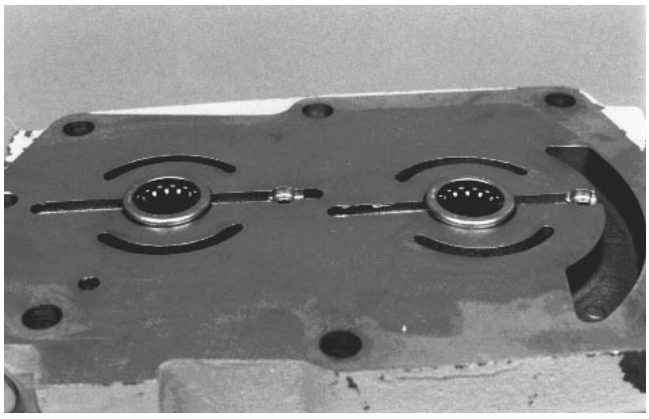

Figure 57

Assembly of Transmission

1. Clean and lightly oil parts before assembly. Tighten all threaded parts to recommended torque value.

IMPORTANT: Most parts have critical, high tolerance surfaces. Use caution to prevent damage to these surfaces during assembly. Protect exposed surfaces, openings and ports from damage and foreign material.

2. Install swashplate into housing (Fig. 58). Make sure swashplate control shaft is located on correct side of housing (note marks made during disassembly).

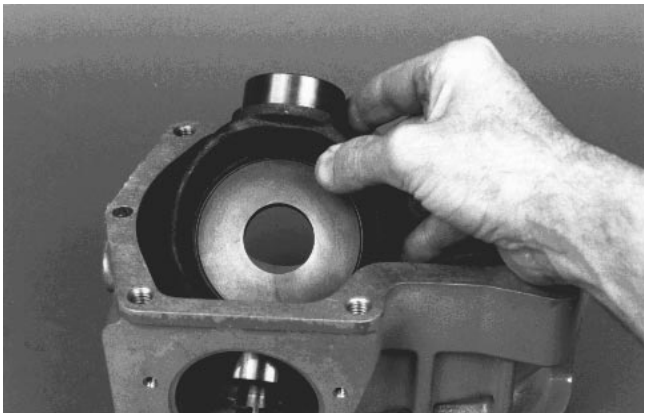

Figure 58

3. Install trunnion cover (with o-ring and trunnion bearing) into housing and over swashplate trunnion (Fig. 59).

NOTE: The trunnion bearings are pressed into the cover assemblies so the split in each bearing will be located closest to the center section.

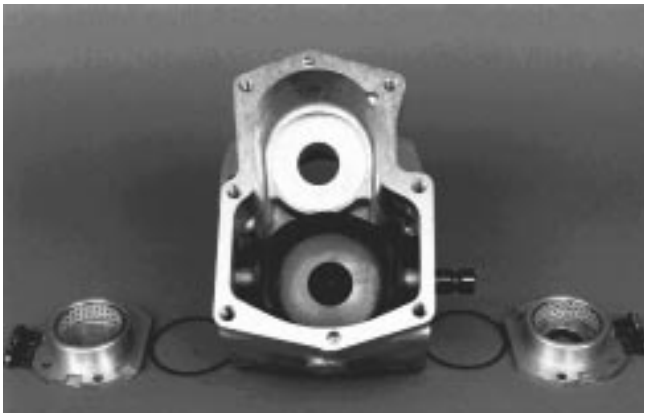

Figure 59

4. Use an arbor press to press a new seal into trunnion seal cover. Outer face of seal should be pressed flush with outer surface of seal cover. Be careful not to damage the seal.

5. Install trunnion seal cover with o-ring, seal and trunnion bearing into housing and over swashplate trunnion (see Trunnion Seal Replacement). Wrap end of swashplate control shaft with thin plastic to prevent damage to seal lip during installation (Fig. 60).

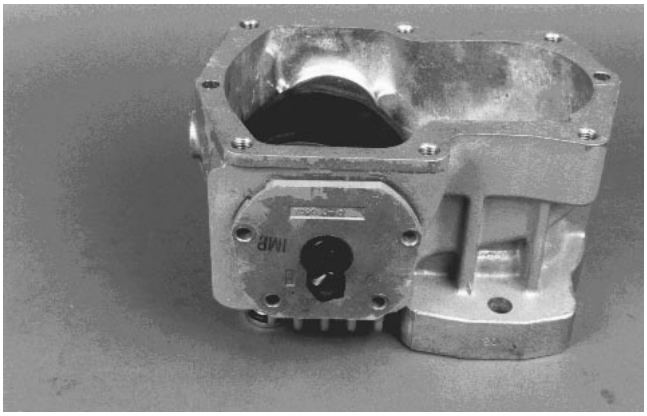

Figure 60

6. Install hex tapping screws and tighten to a torque of 6 to 9 ft-lb (Fig. 61).

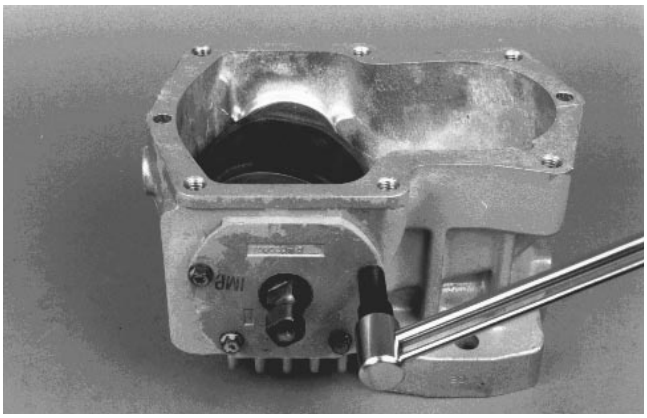

Figure 61

7. Press ball bearing onto pump shaft. Install pump shaft and bearing assembly into housing (Fig. 62).

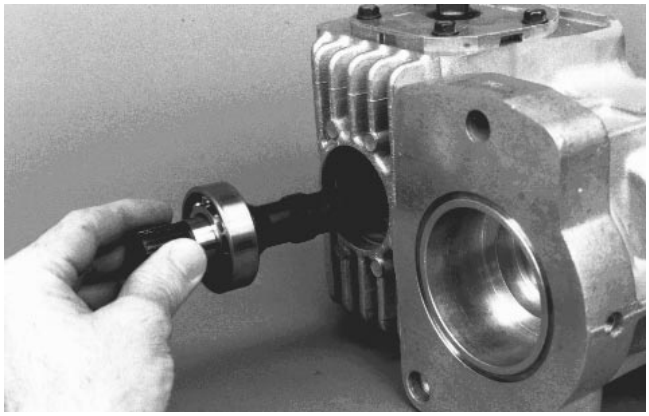

Figure 62

8. Install PTO seal guide and o-ring into housing. Install spiral retaining ring (Fig. 63).

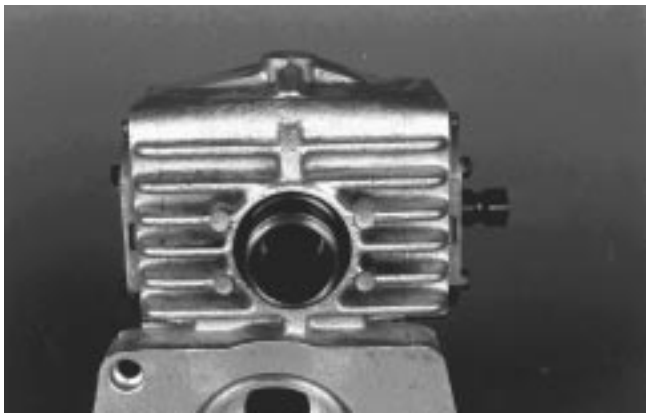

Figure 63

9. Press inner bearing, spacer and outer bearing onto motor shaft (Fig. 64).

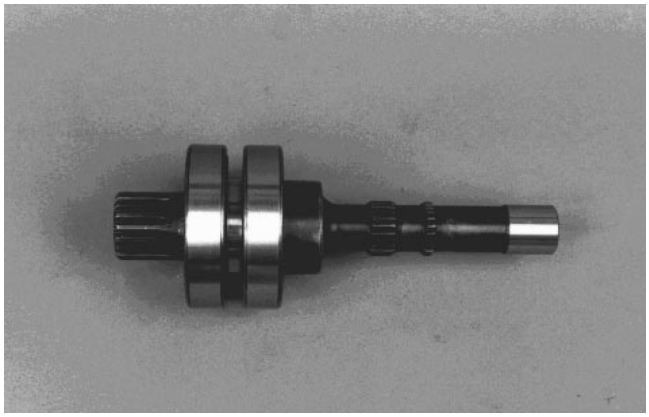

Figure 64

10. Install motor shaft assembly into housing (Fig. 65).

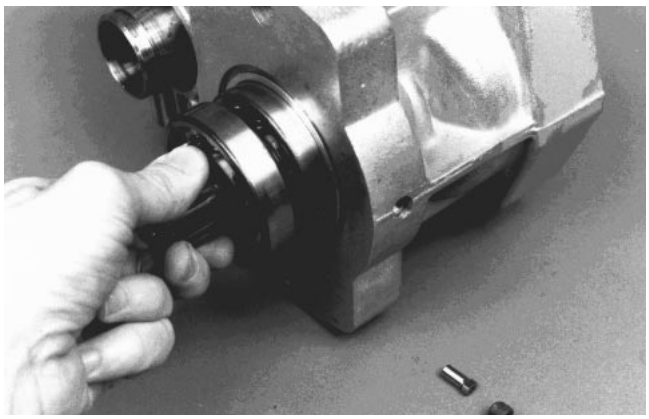

Figure 65

11. Install motor shaft bearing retaining pin into housing (Fig. 66).

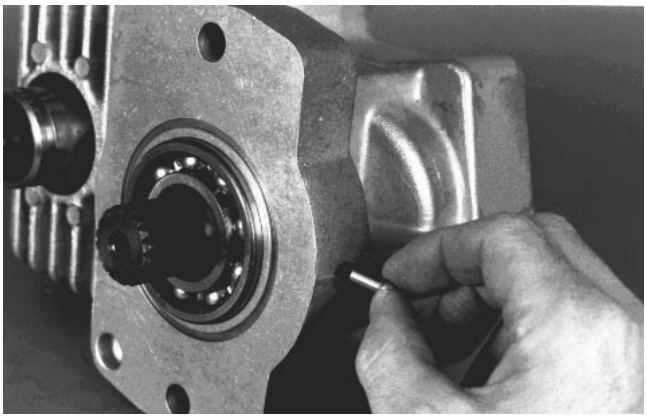

Figure 66

12. Install pipe plug over motor shaft bearing retaining pin and tighten to a torque of 6 to 9 ft-lb (Fig. 67).

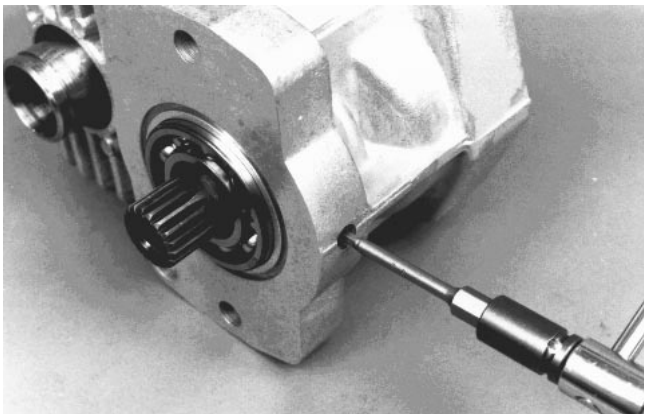

Figure 67

13. Coat thrust plates with petroleum jelly and install into housing and swashplate (Fig. 68). The thrust plates are reversible.

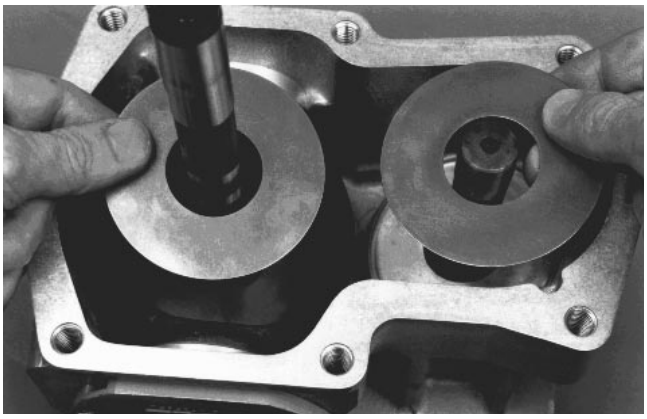

Figure 68

14. Assemble each cylinder block kit by installing piston assemblies into the slipper guide. Lubricate pistons and cylinder block bores. Install assembled guide and pistons into cylinder block by inserting pistons into cylinder block bores (Fig. 69). The pistons and bores are not selectively fitted, so no specific piston and bore orientation is required.



Figure 69

15. Lay the transmission on its side and install cylinder block kits into the housing (Fig. 70).

16. Put the transmission housing on a work surface with the center section opening facing up.

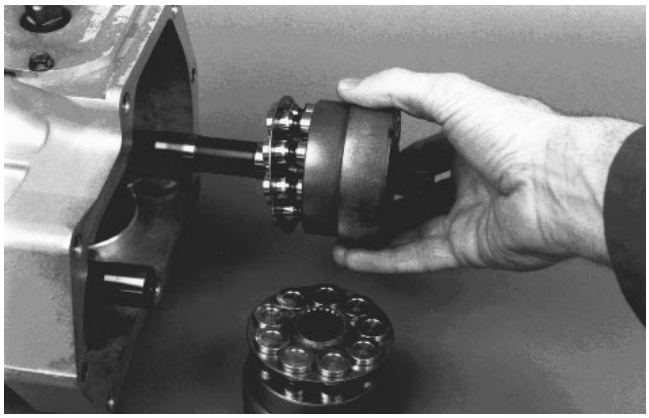

Figure 70

17. Install valve plate locating pins into center section (Fig. 71).

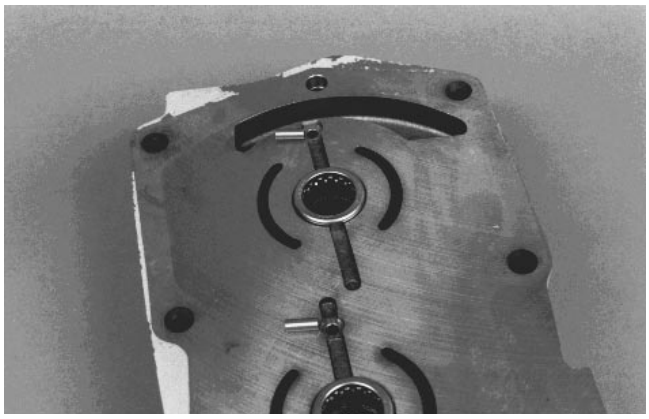

Figure 71

18. Coat back (steel side) of valve plates with petroleum jelly to hold them in position and install valve plates onto center section, with their bronze faces visible (Fig. 72). The notch on each valve plate must engage its locating pin.

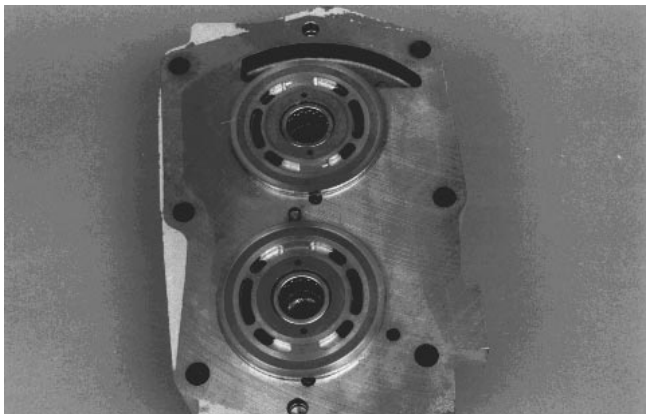

Figure 72

NOTE: Do not interchange pump and motor valve plates when assembling transmission. The pump plate can be identified by the grooves on one side of the ports (Fig. 73). The motor valve plate has no grooves.

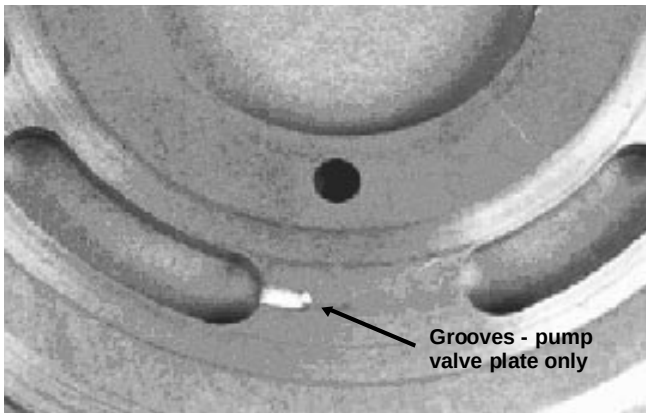

Figure 73

19. Install the two (2) alignment pins and install a new center section gasket onto the housing (Fig. 74).

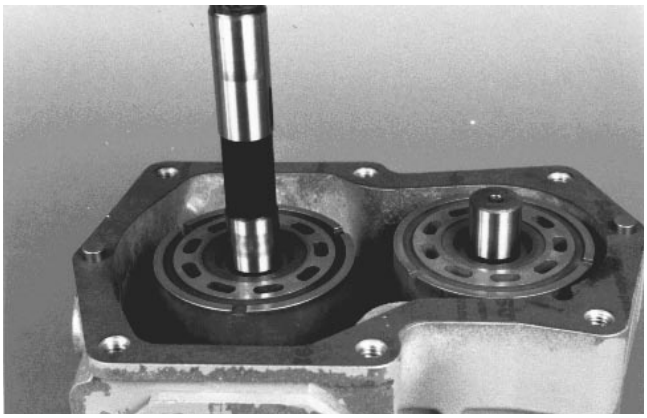

Figure 74

20. Install center section with valve plates onto transmission housing (Fig. 75).

IMPORTANT: Make sure all parts are properly aligned. Do not force center section into position on the housing.

NOTE: When the center section is properly installed, the cylinder block springs will hold the end center section away from the housing approximately 1/8 in.

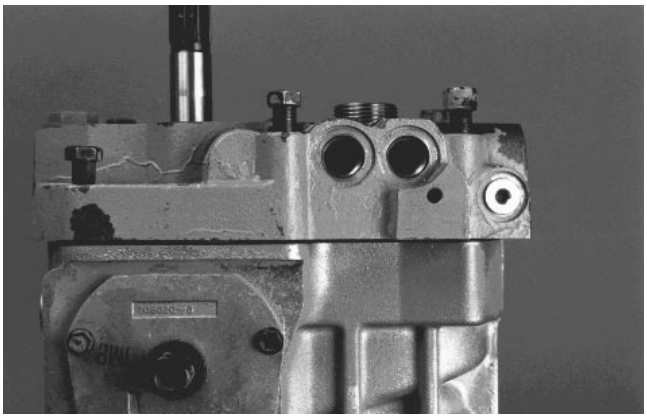

Figure 75

21. Install the six (6) screws that retain the center section to the housing and torque evenly to 33 to 41 ft-lb (Fig. 76).

22. Rotate the pump and motor shafts to make sure transmission is assembled correctly. When properly assembled, a maximum torque of 3.5 ft-lb should be required to turn either shaft.

23. Assemble the following components as described in previous procedures:

Charge Check / High Pressure Relief Valves
Charge Relief Valve
Heat Exchanger Bypass Valve
Filter Bypass Valve
Filter Bypass Reverse Flow Check Valve
Charge Pump

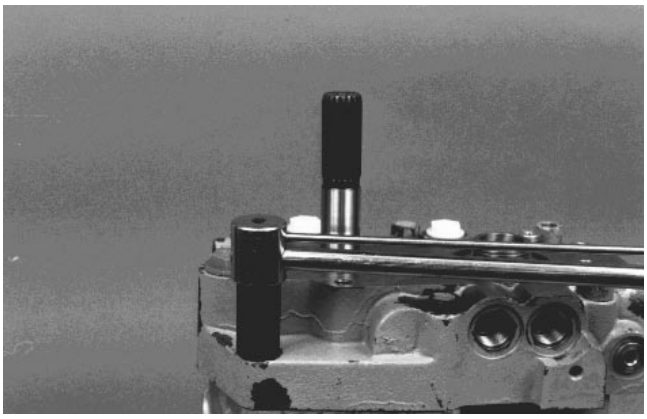

Figure 76

Mowing Circuit Repairs

Valve Block Service

1. Before removing any parts from the valve block, park the machine on a level surface, engage the parking brake, lower the cutting units and stop the engine. Remove key from ignition switch.

2. Raise seat and secure with prop rod to get access to valve block.

NOTE: Ports on valve block are marked for easy identification of components. Example: S1 is front mow circuit solenoid valve and R1 is front mow/lift circuit relief valve. (See Hydraulic Schematic and Hydraulic Flow Diagrams to identify function of hydraulic lines and cartridges at each port location.)

3. If necessary, valve block can be removed:

A. Disconnect solenoid electrical connecters.

B. Disconnect hydraulic lines. Put caps or plugs on disconnected hoses and fittings to prevent contamination.

C. Remove four (4) capscrews from bottom of valve block and lift valve block out of machine.

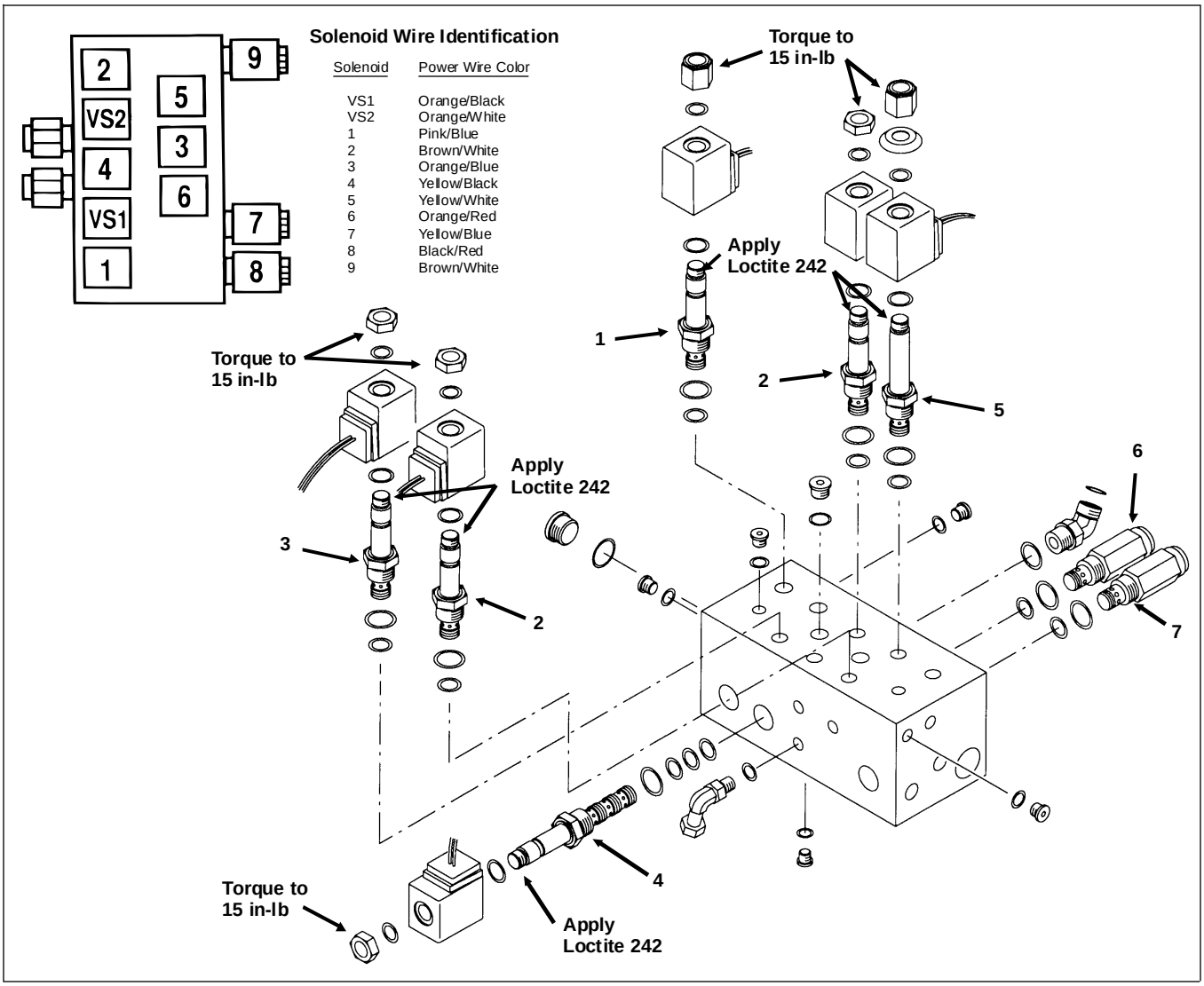

Figure 77

1. Solenoid valve **S1, S2**
2. Solenoid valve **S3, S4, S5**
3. Solenoid **S6**
4. Solenoid **S7, S8, S9**
5. Solenoid **VS1, VS2**
6. Relief Valve **R1**
7. Relief Valve **R2**

Cartridge Valve Service

1. Clean valve block to prevent contamination when valve cartridge is removed.

2. Remove the cartridge valve from its port:

   A. Remove nut from solenoid.

   B. Remove solenoid coil and O-ring at each end of solenoid coil.

   C. Use a deep socket to remove solenoid cartridge valve. NOTE: Use care when handling valve cartridges because slight bending or distortion of stem tube can cause binding and malfunction.

3. Visually inspect port in block for damage to sealing areas, damaged threads or contamination.

4. Visually inspect cartridge for damaged seals and contamination (Fig. 78):

   A. O-rings and back-up rings must be arranged properly on the valve for proper operation. Replace any damaged seals.

   B. Contamination may cause valves to stick or hang-up. Contamination can become lodged in small valve orifices or seat areas on poppet type valves causing malfunction.

5. Clean and check for proper valve operation:

   A. Use clean mineral spirits to clean cartridge valve. Submerge the valve in clean mineral sprits and use a probe to push the internal spool in and out 20 to 30 times to flush out contamination. Mineral spirits does not affect the O-ring material. particles as fine as talcom powder can affect the operation of high pressure hydraulic valves.

Cartridge Installation

1. Lubricate all o-rings with clean hydraulic oil.

2. Carefully thread cartridge into the port by hand. Valve cartridge should go in easily without binding.

3. Use a torque wrench and deep socket to tighten cartridge valves to a torque of 35 ft-lb. Excessive torque may cause the spool to bind and malfunction.

NOTE: Use care when handling solenoid valve cartridges because slight bending or distortion of stem tube can cause binding and malfunction.

4. Install solenoid coil. Make sure there is an O-ring at each end of the coil. Apply “Loctite 242” or equivalent to threads of stem tube before installing nut. Tighten nut securing solenoid coil nut to a torque of 15 in-lb.

5. If problem still exists, remove valve again and replace with a new valve.



Figure 78

Cartridge Valve Identification

NOTE: When troubleshooting hydraulic problems, keep in mind that is possible for some cartridge valves to be installed in the wrong ports, causing the system to malfunction.

Solenoid valves in valve block must not be interchanged between ports, **with the following exceptions**:

S1 and S2 are the same design and can be interchanged (Fig. 79).

S3, S4 and S5 are the same design and can be interchanged (Fig. 80).

S7, S8 and S9 are the same design and can be interchanged (Fig. 82).

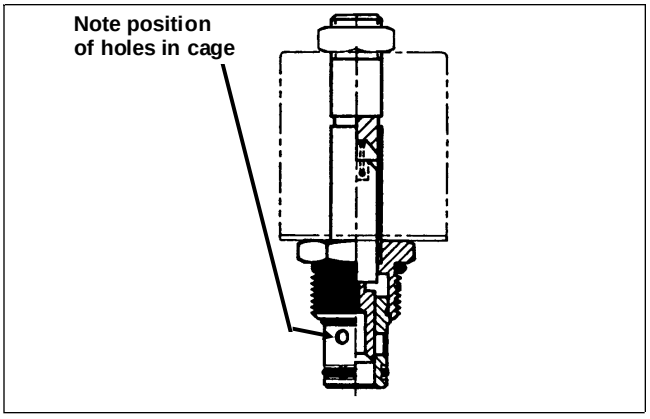

Figure 79

Solenoid valves S1 and S2
2 way spool valve – normally open

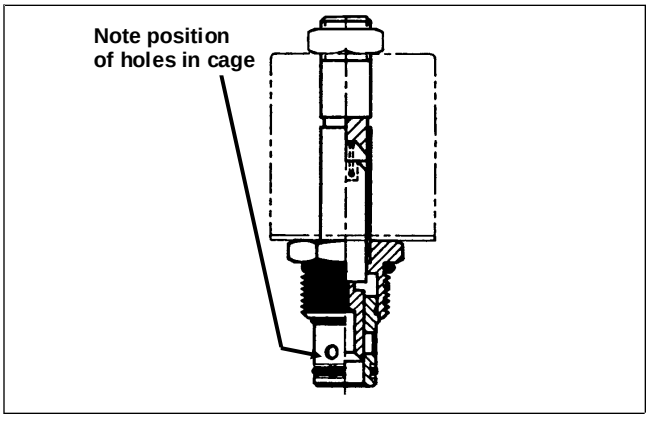

Figure 80

Solenoid valves S3, S4 and S5
2 way spool valve – normally closed

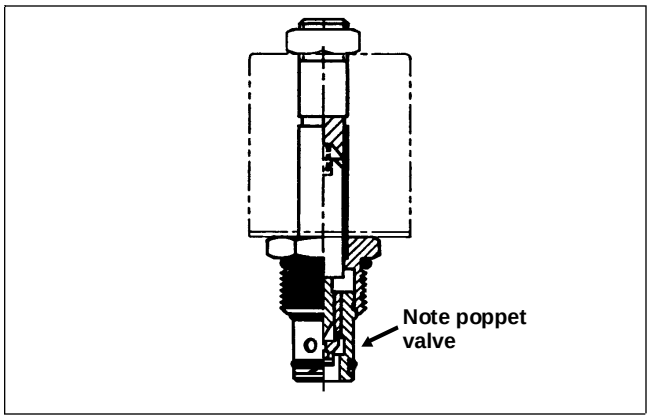

Figure 81

Solenoid valve S6
2 way pilot operated poppet valve – normally closed

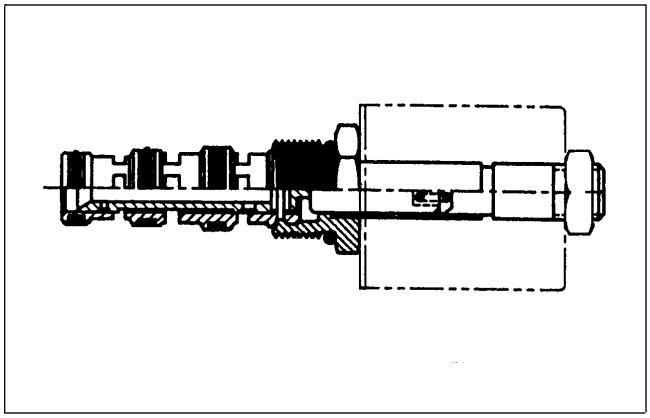

Figure 82

Solenoid valve S7, S8 and S9
4 way 2 position spool valve

Relief valves in the valve block cannot be interchanged between ports R1 and R2 because they have different internal parts and pressure settings (Fig. 84).



Figure 84

Relief valves

R1 – 3000 PSI
R2 – 2000 PSI

Flow control cartridges are the same and can be interchanged between ports VS1 and VS2 (Fig. 85).

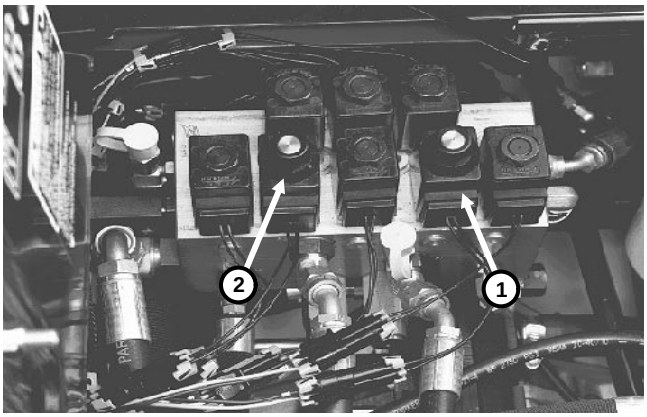

Figure 85

Flow control solenoid valves

1. **VS1**
2. **VS2**

Pump Removal and Installation

Removal

1. Park machine on a level surface, lower cutting units, engage parking brake and stop the engine. Remove key from ignition switch.

2. Raise seat and secure with prop rod to get access to pump (Fig. 91, 92).

3. Drain the hydraulic reservoir.

4. To prevent contamination of hydraulic system during removal, thoroughly clean exterior of pump and fittings.

5. Disconnect hydraulic lines from pump and put caps or plugs on open hydraulic lines and fittings. Label disconnected hydraulic lines for proper reassembly.

6. Remove two (2) capscrews and washers securing pump to support plate. Remove pump, transmission coupling, and pump sleeve.

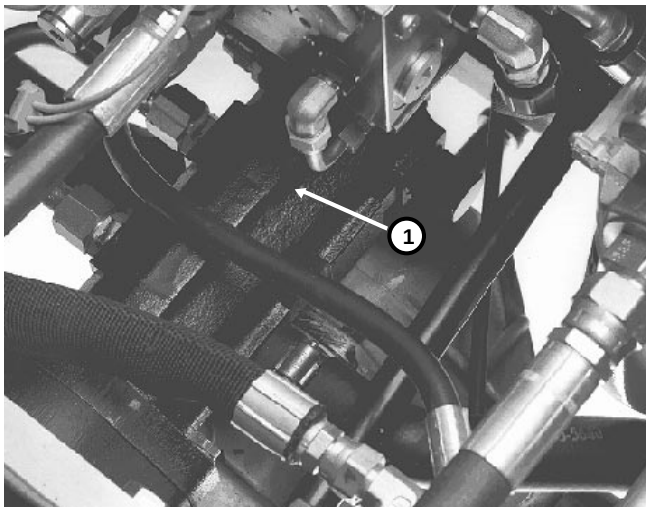

Figure 91

1. Pump

Installation

1. Lubricate a new o-ring with clean hydraulic oil and install on pump (Fig. 92).

2. Install Pump sleeve on transmission output shaft.

3. Install transmission coupling on pump shaft and install pump on to transmission adapter. Secure pump and transmission adapter to support plate with two (2) capscrews and lock washers.

4. Replace hydraulic filter and fill hydraulic reservoir with new hydraulic oil.

5. Disconnect fuel stop solenoid electrical connector on engine to prevent engine from starting. Prime the hydraulic pump by turning the ignition key switch to crank the engine for 10 seconds. Repeat cranking procedure again.

6. Connect fuel stop solenoid electrical connector, start the engine and check for proper operation.

7. Stop the engine and check for hydraulic oil leaks. Check hydraulic reservoir oil level.

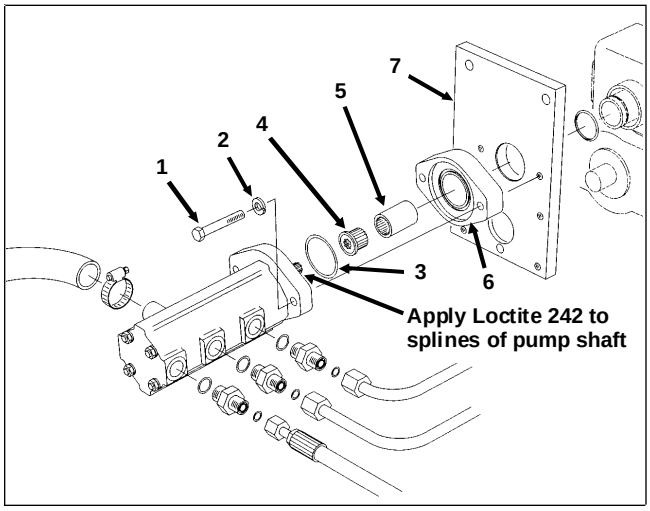

Figure 92

1. Capscrew
2. Lockwasher
3. O-ring seal
4. Transmission coupling
5. Pump sleeve
6. Transmission adapter
7. Support plate

Pump Repair

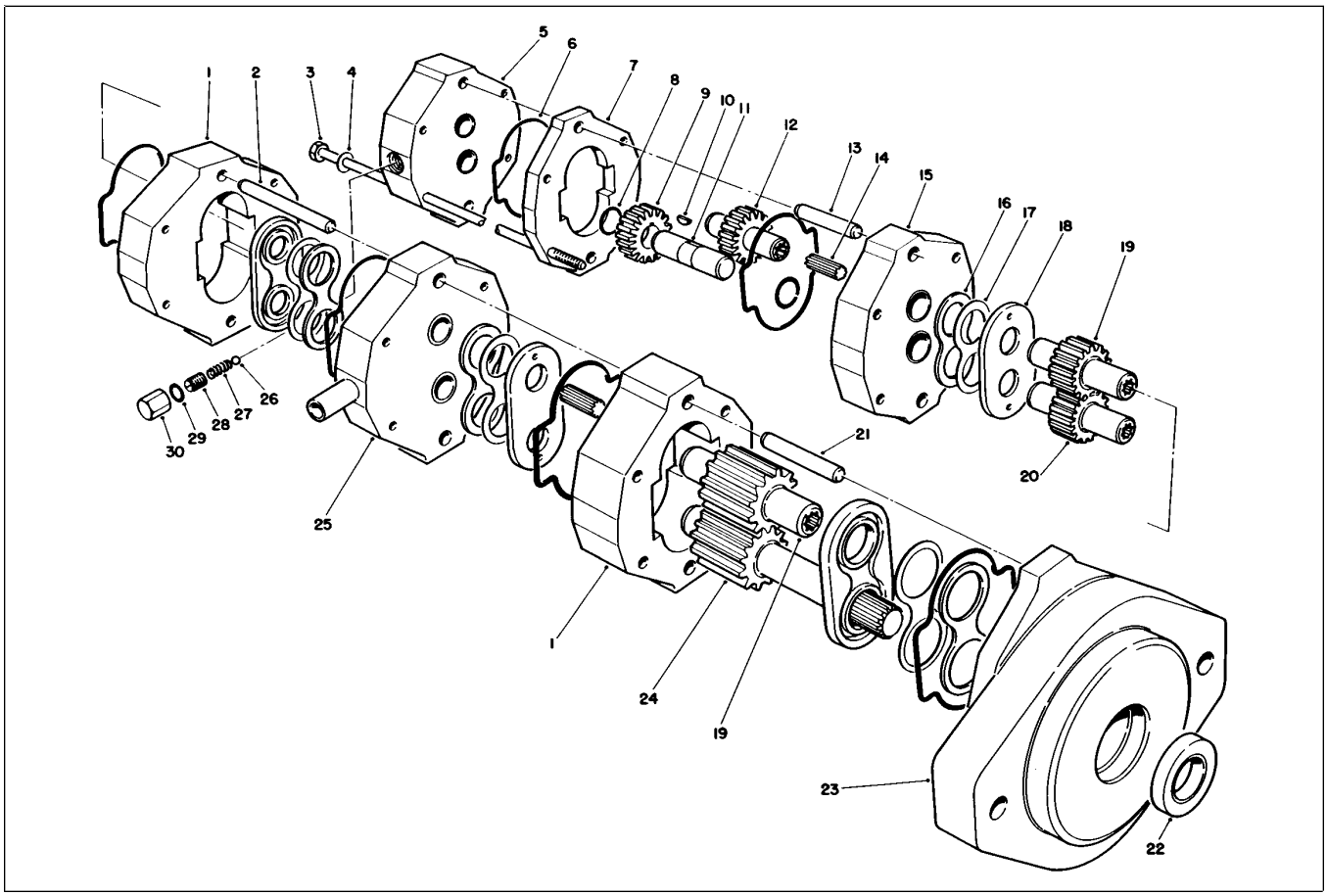

Figure 93

1. Gear plate (2)
2. Dowel pin (2)
3. Cap screw (4)
4. Washer (4)
5. Cover assembly
6. Seal ring (6)
7. Gear plate
8. Retaining ring (2)
9. Gear
10. Woodruff key
11. Drive shaft
12. Idler shaft assembly
13. Dowel pin (2)
14. Coupling (2)
15. Plate assembly
16. High press. load seal (4)
17. Pre-load high press. load seal (4)
18. Load plate (4)
19. Idler shaft (2)
20. Drive gear
21. Dowel pin (2)
22. Oil seal
23. Pump body assembly
24. Drive shaft
25. Plate assembly
26. Ball
27. Spring
28. Valve adjuster
29. Gasket
30. Valve adjuster cap

Relief Valve Service

1. Remove cap (Fig. 93, Item 30). Remove valve adjuster (Item 28), spring (Item 27), and ball (Item 26).

2. Remove gasket (Item 29) from cap.

3. Inspect ball for burrs or roughness. Inspect relief valve bore and seat in cover. If the bore or seat is damaged the cover must be replaced.

4. Inspect spring for damage.

5. Clean and air dry all parts. Apply hydraulic oil to parts. Install ball, spring and valve adjuster.

6. Install new gasket on cap and install cap.

7. Before operating the machine, check steering relief pressure and adjust to 1250 psi. To adjust, remove cap, turn adjuster clockwise to increase pressure and counterclockwise to decrease pressure. (See Steering Valve and Steering Pump Test in Chapter 7 - Steering and Brakes.)

Pump Service

1. Plug ports and wash exterior of pump with cleaning solvent.

2. Draw a line across seam areas on pump case with a scribe or marker to ensure proper reassembly.

IMPORTANT: Use caution when clamping in a vise to avoid distorting any parts.

3. Secure the flange end of the pump (Fig. 88, Item 23) in a vise with the drive shaft (Item 24) pointing down.

4. Remove the four (4) capscrews (Item 3) and washers (Item 4).

5. Put your hand on the pump case and gently tap the pump case with a soft face hammer to loosen the pump sections. Be careful not to drop parts or disengage gear mesh.

6. Before removing each gear set, apply marking dye to mating teeth to retain “timing”. Pump efficiency may be affected if the teeth are not installed in the same position during reassembly.

IMPORTANT: To prevent damage to load plates during pump operation, do not mark gears with a punch or scribe.

7. Be careful when disassembling. The needle bearings in the pump body may be of the loose, grease retained type. Pack these with general purpose grease to retain them for reassembly. It is recommended NOT to remove the bearing races. The bearings cannot be serviced separately. The pump body must be replaced if the bearings are damaged.

8. Remove the shaft oil seal (Item 22), seal rings (Item 6), load plates (Item 18), pre-load high pressure seals (Item 16) and high pressure seals (Item 17) while disassembling the pump.

9. Clean all parts. Check all parts for burrs, scoring, nicks and other damage. Check the bushings in the plate assemblies (Items 15 and 25) and cover assembly (Item 5) for excessive wear or scoring. Replace the cover or plate assemblies as necessary. The bushings are not serviceable.

10. Replace load plates if excessively worn or scored. Replace gears in sets if scored or worn excessively.

11. Apply oil to inside of gear plates and bushings. Apply grease or petroleum jelly to load seals and load plates before installing.

12. Assemble pump sections starting at body end (Item 23). Apply grease or petroleum jelly to new seal rings (Item 6) before installing.

13. After pump has been assembled, tighten capscrews by hand. Rotate the drive shaft to check for binding. Protect the shaft if using a pliers.

14. Tighten the capscrews evenly in a crossing pattern to a torque of 25 ft-lb.

15. Before installing new oil seal (Item 22), make sure seal bore and shaft on pump are clean and free of foreign material.

16. Put seal protector tool on pump shaft or apply thin plastic or tape on the shaft to protect the seal from damage.

17. Before installing seal, fill volume between lips of new seal with Master Lubricant Co. “Lubrico M-6", Lubriplate ”Aero Lube" or equivalent. Apply grease or petroleum jelly to inside diameter of new oil seal. Carefully install new oil seal with lip of seal toward pump body.

Reel Motor Removal and Installation

1. Disconnect hydraulic lines. Put caps or plugs on fittings and hoses to prevent contamination. Tag hydraulic lines for proper reassembly.

2. Loosen motor mount nuts (Fig. 94).

3. Rotate motor clockwise so motor flanges clear studs and pull motor out.

4. Reverse steps 1 - 3 to reinstall motor.

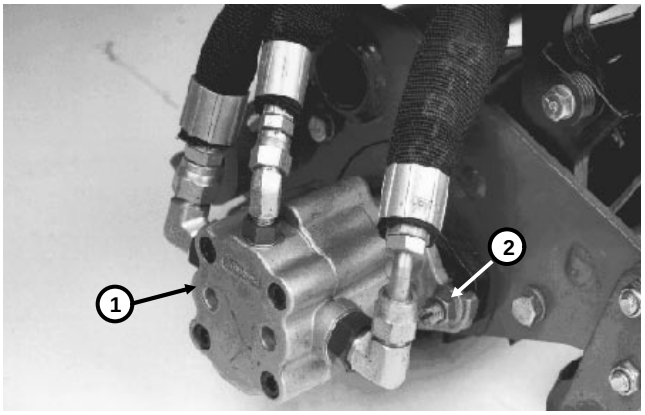

Figure 94

1. Motor **2. Motor mount nuts**

Reel Motor Shaft Seal Replacement

1. Remove reel motor (see Reel Motor Removal and Installation).

2. Plug ports and wash exterior of motor with cleaning solvent. Make sure parts and work area are clean.

3. Remove snap ring from motor (Fig. 95).

4. Install threaded metal o-ring seal plugs in the two (2) pressure ports on the motor or put metal threaded caps on the fittings in these ports.

5. With motor shaft pointed away from you into a clean five (5) gallon container, attach a hydraulic load (hand pump) or compressed air to the case drain port.

6. With the motor shaft pointed away from you into a clean five (5) gallon container, gradually apply pressure to the case drain port. The seal should come out of the motor seal cavity.

NOTE: Seal may also be removed by punching two holes in face of seal 180° apart, installing metal screws and pulling seal out by grasping the screws.

IMPORTANT: Do not try to pry the seal out of the motor. This usually damages the shaft seal bore and mounting hub area so oil will leak past the seal.

7. Remove and discard shaft seal and spacer.

8. Clean seal bore and shaft on motor so it is free of any foreign material.

9. Install a new spacer on motor shaft.

10. Put seal protector tool on motor shaft (Fig. 90) or apply thin plastic or tape on the shaft to protect the seal from damage.

11. Apply “Permatex No. 2” or equivalent to outside diameter of new seal.

12. Apply grease or petroleum jelly to inside diameter of new shaft seal.

13. Use seal installation tool to install new shaft seal. Make sure seal is installed square with the seal bore.

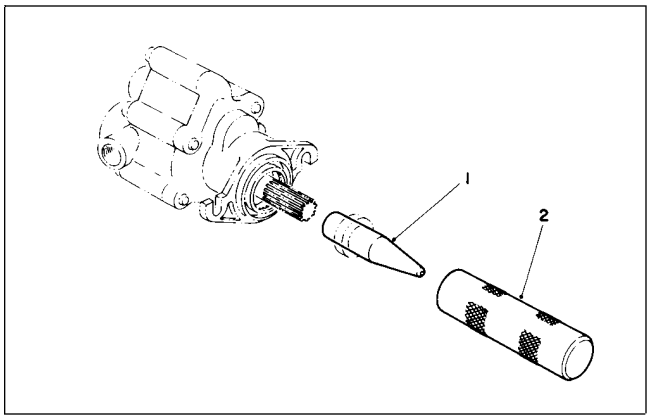

Figure 95

1. Seal protector
2. Seal installation tool

Reel Motor Repair

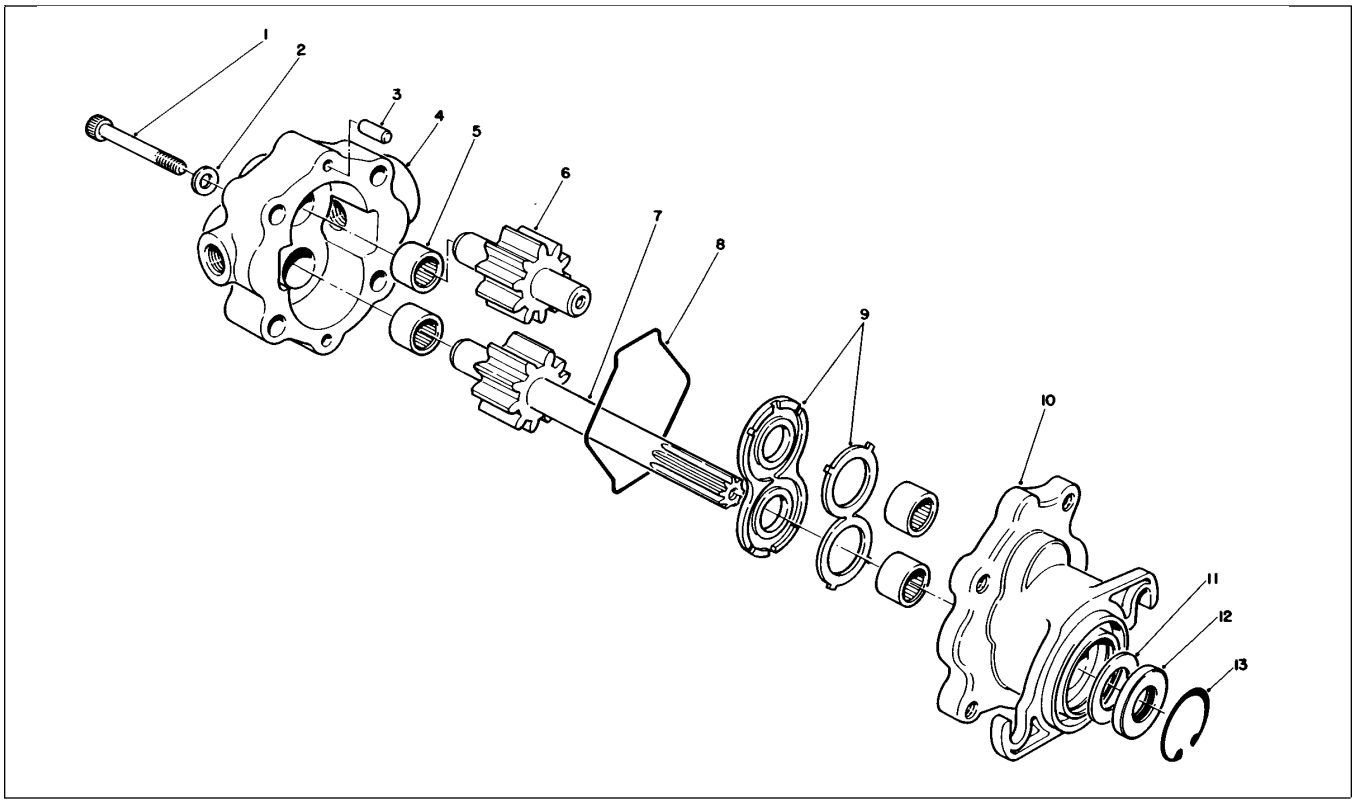

Figure 96

1. Socket head screw (2)
2. Washer (2)
3. Dowel pin (2)
4. Cover
5. Needle bearing
6. Idler gear assembly
7. Drive shaft assembly
8. Ring seal
9. Load plate assembly
10. Body
11. Spacer
12. Shaft seal
13. Retaining ring

1. Plug ports and wash exterior of motor with cleaning solvent. Make sure parts and work area are clean.

IMPORTANT: Extreme caution must be used when using a vise to avoid distorting any parts.

2. Draw a line across the seam areas on the motor case with a scribe or marker to ensure proper reassembly.

3. Remove four socket head capscrews (Fig. 96).

4. Put your hand on the cover assembly and gently tap the drive shaft with a soft face hammer to separate the body from the cover. Be careful not to drop parts or disengage gear mesh.

5. Before removing gear set, apply marking dye to mating teeth to retain “timing”. Pump efficiency may be affected if the teeth are not installed in the same position during reassembly.

IMPORTANT: To prevent damage to load plates during motor operation, do not mark gears with a punch or scribe.

6. Be careful when disassembling. The needle bearings may be of the loose grease retained type. Pack these with general purpose grease to retain them for reassembly. It is recommended NOT to remove the bearing races from the cover and body.

7. Remove and discard the ring seal, snap ring, shaft seal, and spacer (Items 8, 11, 12 and 13). These items are available in a repair kit.

8. Clean and air dry all parts. Check for burrs, scoring, nicks, etc.

9. Replace gears as a set if excessively scored or worn. Replace load plate if worn or scored.

10. Apply grease or petroleum jelly to load plate assembly and install in body. Insert gear set into body, maintaining the original timing and locations.

11. Apply grease or petroleum jelly to ring seal and install on body.

12. Apply hydraulic oil to inside of cover and assemble the cover to the body, making sure none of the parts become displaced. Insert the capscrews and washers and hand tighten.

13. Before tightening the capscrews, rotate the drive shaft in the direction of normal rotation (counterclockwise) to check for binding. You may not be able to rotate the drive shaft by hand. Protect the shaft if using a pliers.

14. Tighten the capscrews evenly in a crossing pattern to a torque of 17 ft-lb.

15. Carefully install a new spacer, shaft seal and snap ring. (Perform steps 8 - 13 under Reel Motor Shaft Seal Replacement in this section of the book).

Lift Cylinder Removal and Installation

1. Put machine on a level surface, lower the cutting units, stop the engine, engage the parking brakes and remove key from ignition switch.

2. To prevent contamination of hydraulic system during removal, thoroughly clean exterior of cylinder and fittings.

3. Disconnect hydraulic lines from cylinder and put caps or plugs on open hydraulic lines and fittings. Label disconnected hydraulic lines for proper reassembly.

4. Remove retaining ring and thrust washer from one side of cylinder pin on each end of cylinder.

5. Remove cylinder pin from each end of cylinder and remove cylinder.

6. Reverse steps 3 - 5 to install cylinder.

Lift Cylinder Repair

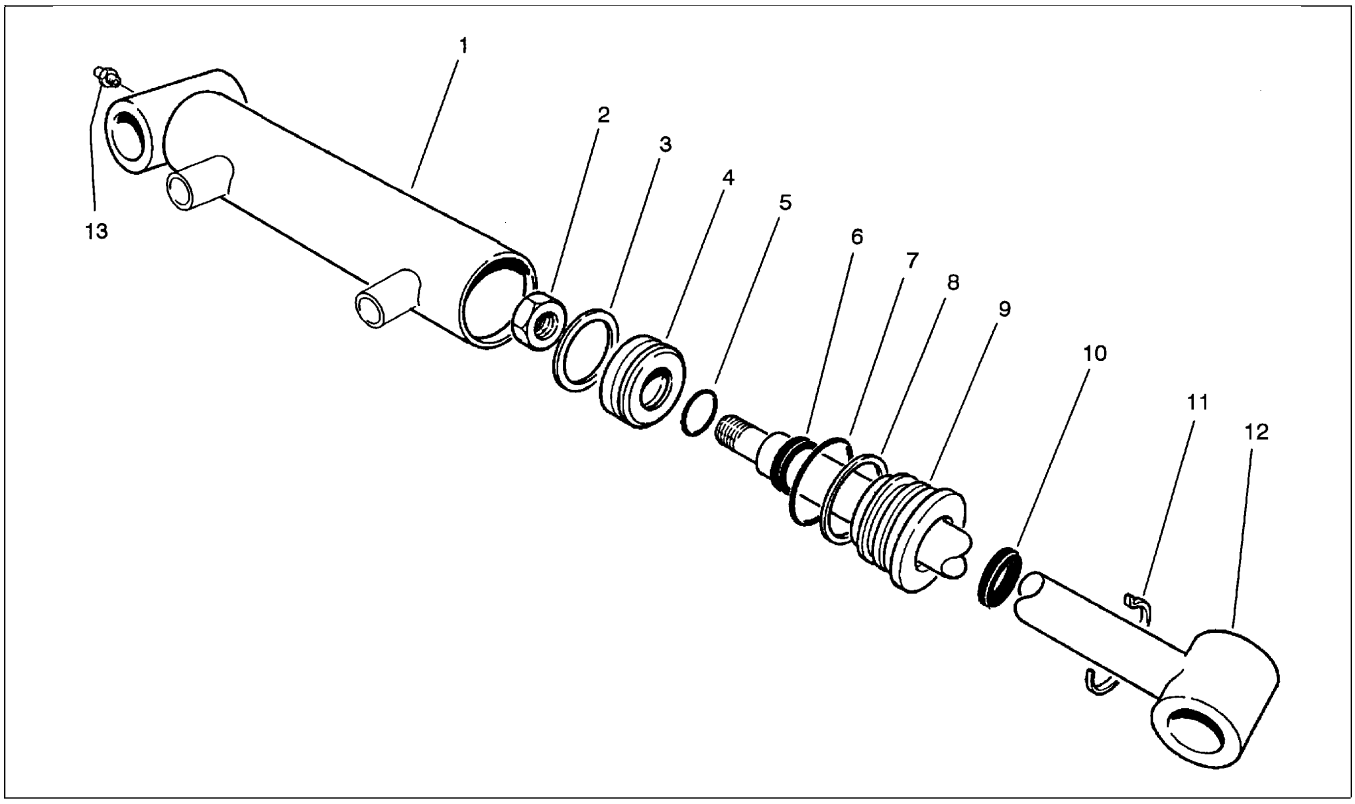

Figure 98

1. Barrel
2. Nut
3. Uni-ring seal
4. Piston
5. O-ring seal
6. Rod seal
7. O-ring seal
8. Back-up ring
9. Head
10. Dust seal
11. Retaining ring
12. Rod

IMPORTANT: To prevent damage when clamping the cylinder barrel in a vise, clamp only on the pivot end. Do not clamp the vise jaws against the smooth shaft surface. Protect the shaft surface before mounting in the vise.

1. After removing the cylinder, pump the oil out of the cylinder into a drain pan by SLOWLY moving the cylinder's piston in and out of the cylinder bore.

2. Plug the ports and wash the outside of the cylinder with cleaning solvent.

3. Mount the cylinder in a vise so the shaft end of the cylinder is tilted up slightly. Do not close the vise so firmly that the barrel could become distorted.

4. Use a spanner wrench to rotate the head and remove the retaining ring (Fig. 99).



Figure 99

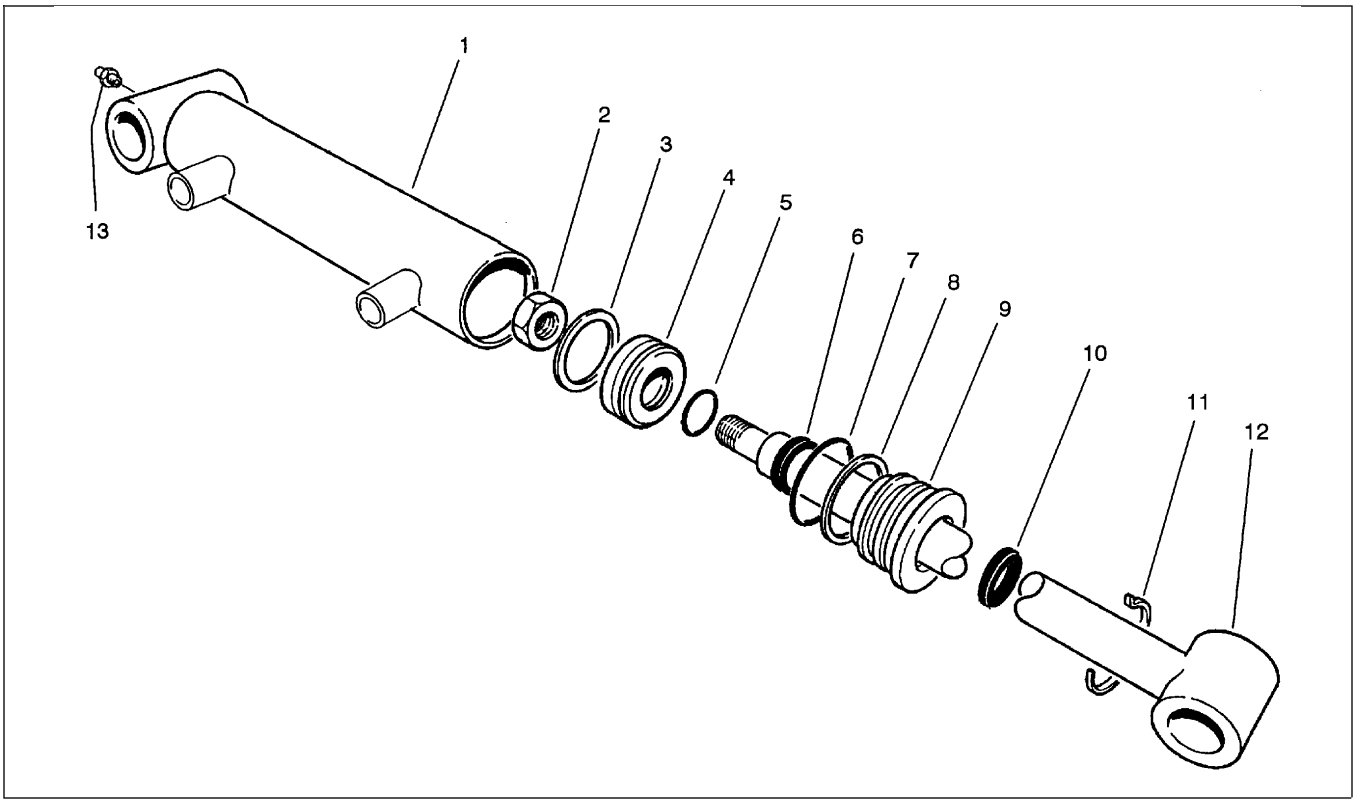

Figure 100

1. Barrel	**5. O-ring seal**	**9. Head**
2. Nut	**6. Rod seal**	**10. Dust seal**
3. Uni-ring seal	**7. O-ring seal**	**11. Retaining ring**
4. Piston	**8. Back-up ring**	**12. Rod**

5. Grasp the clevis end of the shaft and use a twisting and pulling motion to carefully extract the piston, shaft, and head from the barrel.

6. Securely mount the clevis end of the shaft in a vise and remove the lock nut from the piston end of the shaft. Remove the piston. Slide the head off of the shaft.

7. Remove and discard all seals and back-up rings.

8. Wash the parts in a safe solvent. Dry the parts with compressed air. DO NOT wipe them dry with a cloth or paper as lint and dirt may remain.

9. Inspect the internal surface of the barrel for damage (deep scratches, out-of-round, etc.). Inspect the head, shaft and piston for evidence of excessive scoring, pitting, or wear. Replace any defective parts.

10. To install the two piece Uni-ring piston seal:

A.Soak the seal rings in hot water. The hot water will soften the rings allowing then to stretch over the piston.

B. Apply clean hydraulic oil to the black inner ring and Install the ring into the seal groove on the piston.

C. Apply clean hydraulic oil to the purple outer ring and install the ring into the same groove over the black ring.

11. Put a light coating of hydraulic oil on all other new seals and back-up washers. Install the new seals and back-up washers. Install the head onto the piston rod. Install the piston onto the shaft and tighten the lock nut.

12. Put a heavy coating of hydraulic oil on all cylinder parts to ease assembly. Slide the shaft assembly and head into the barrel. Install the retaining ring to secure the assembly in the barrel. Make sure “sharp edge” of retaining ring faces OUT. Make sure snap ring is fully installed into mating groove.

Flushing The Hydraulic System

IMPORTANT: Drain and refill reservoir, change oil filter and flush hydraulic system if component failure was severe or system is contaminated (oil appears milky or black or contains metal particles.

1. Lower cutting units, stop engine, engage parking brake and remove key from ignition switch.

2. Put drain pan under reservoir (Fig. 101). Remove drain plug from bottom of reservoir and let oil drain into pan. Install drain plug.

3. Inspect and clean reservoir (see Inspecting Reservoir Parts).

4. Clean area around filter mounting area. Remove and discard filter (Fig. 102). Make sure filter mounting surface is clean. Apply hydraulic oil to gasket on new filter. Fill filter with hydraulic oil. Screw filter on until gasket contacts mounting plate, then tighten filter one-half turn.

5. Fill hydraulic reservoir with approximately 8.5 gallons of hydraulic oil and install reservoir cap.

Use only hydraulic oils specified (see Specifications section of this chapter). Other fluids could cause system damage.

6. Disconnect fuel stop solenoid electrical connector to prevent engine from starting.

7. Turn ignition key switch to engage starter for ten (10) seconds to prime pump. Repeat this procedure again.

8. Connect fuel stop solenoid electrical connector.

9. Start engine and let idle at low speed for minimum of two (2) minutes.

10. Increase engine speed to high idle for minimum of one (1) minute under no load.

11. Turn steering wheel fully left and right several times.

12. Raise and lower cutting units several times.

13. Engage cutting units and run under no load for five (5) minutes.

IMPORTANT: Stop engine and remove bedknife to reel contact before operating cutting units under no load. Operating cutting units with bedknife to reel contact will cause reel and bedknife cutting edges to "rifle" and/or become dull.

14. Shut off engine and check for hydraulic oil leaks. Check oil level in hydraulic reservoir and add correct oil if necessary.

15. Replace hydraulic filter again after first 10 to 15 hours of operation, or sooner if filter bypass indicator enters the RED zone when the engine is running.

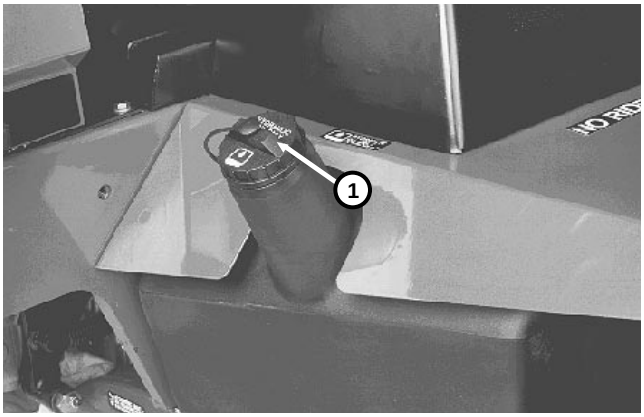

Figure 101

1. Hydraulic reservoir

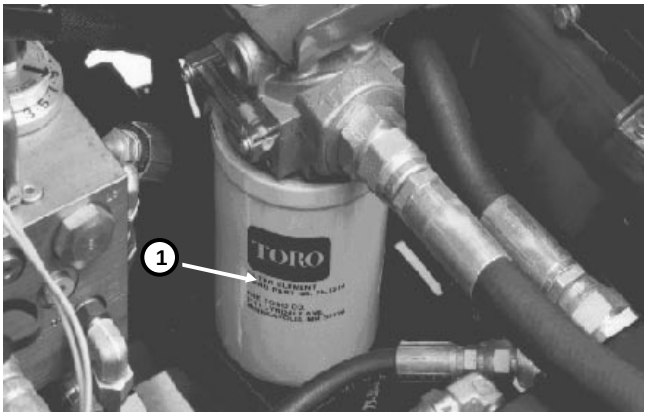

Figure 102

1. Hydraulic filter

Inspecting Reservoir Parts

1. Clean filler screen, suction screen and reservoir with clean solvent (Fig. 103).

2. Inspect reservoir for leaks, cracks or other damage.

3. Replace hoses or fittings if worn or leaking.

4. Replace breather with new part.

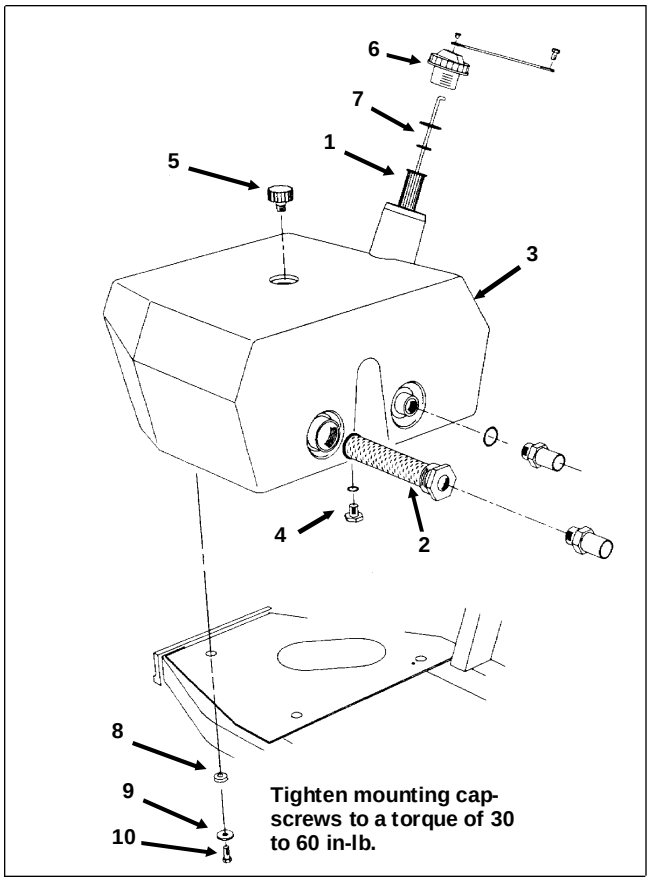

Figure 103

1. Filler screen
2. Suction strainer
3. Reservoir
4. Drain plug
5. Breather
6. Cap
7. Dipstick
8. Grommet (3)
9. Washer (3)
10. Capscrew (3)

Chapter 5

Electrical System

Table of Contents

WIRING SCHEMATICS 3
LOGIC CHART 2
SPECIAL TOOLS 5
TROUBLESHOOTING 7
- Quick Reference Troubleshooting Guide 7
- Starting Problems 9
- General Run and Transport Problems. 11
- Cutting Operation Problems 12
- Verify Interlock Operation 17

TESTING 18
- Ignition Key Switch 18
- Electronic Control Unit (ECU) 19
- Seat Switch 19
- Traction (Neutral) Switch. 20
- Cutting Unit Down Switches 20
- Lower-Mow/Raise Switches 21
- Enable/Disable Switch 21
- Backlap Switch 22
- Start Relay. 22
- Glow Relay 23
- Battery. 23
- Fuel Stop (ETR) Solenoid 24
- Indicator Lights and Gauges 25
- High Temperature Shut-Down Switch 26
- Temperature Gauge Sender 26
- Engine Oil Pressure Switch. 27
- Fuel Gauge Sender. 27
- Hydraulic Valve Block Solenoids 28
- Checking Starter Pinion Gap. 29
- Starter No-Load Test 29
- Magnetic Switch (Solenoid) Attraction Test 30
- Magnetic Switch (Solenoid) Holding Test 30
- Magnetic Switch (Solenoid) Return Test 30
- Alternator Regulated Voltage Test 31
- Alternator Output Test 31

REPAIRS 32
- Battery Service 32
- Fuses. 33
- Traction (Neutral) Switch Replacement. 34
- Electronic Control Unit (ECU) Replacement . . . 35
- Solenoid Valve Coil Replacement 36
- Starter Service. 37
- Alternator Service 41
- Speedometer Sensor Installation 45
- Reel Speed Sensor Installation 46

LOGIC GRID

KEY: X=CLOSED, O=OPEN, P=OUTPUT ON,
M=MOMENTARILY CLOSED,
A=OUTPUT ON IF REELS WERE PREVIOUSLY RUNNING

TIMERS
T1= .5 sec
T2= 5.0 sec
T3= .9 sec
T4= .1 sec
T5= .9 sec
T6= 15 sec

ACTIONS	INPUTS 0	1	2 Key Run	3 Traction Neutral	4 Seat Switch	5 High Coolant Temp	6	7 Raise	8 Enable Reels	9 Front Units Down	10 Backlap Front	11 Backlap Rear	12 Lower / Mow	13	14	15	16	17	AØ Start Key	A1	T Timer Involved	OUTPUTS 0 Diagnostic Light	1 S8,S9	2 S2	3 S3	4 S4	5 S5	6 S6	7 ETR Hold / Alt	8 VS1	9 VS2	10 S1	11 S7	12 Start	13 Preheat
0) Controller OK			X																			P												
1) Preheat			X																		T6	P												P
2) Start				X				O	O				O						X			P											P	P
3) Run (No operator)			X	X		O																P						P						
Run (with operator)			X	O	X	O																P						P						
4) Lower (To turn around)			X					O	O	O	O	O	X									P			P			P						
Lower (All units when disabled)			X					O	O	X	O	O	X									P			P	P	P	P						
Lower (All units when enabled)			X		X			O	X	O	O	O	X									P			P	P		P						
Lower / Mow–Front			X		X			O	X	X	O	O	M								T1	P			P	P		P	P		P			
Lower / Mow–Front & Rear			X		X			O	X	X	O	O	X								T2	P		P	P	P	P	P	P	P	P			
5) Mow			X		X			O	X	X	O	O	M									P		P					P	P	P			
6) Raise (transport)			X					X	O		O	O	O									P			P	P	P					T		
Raise (To turn around front)			X		X			M	X	X	O	O	O								T3	P		A	P	P				A		P		
Raise (To turn around front & rear)			X		X			X	X	X	O	O	O									P			P	P	P					T	P	
Raise (To turn around front & rear)			X		X			X	X	O	O	O	O								T5	P				P	P					T	P	
7) Backlap Front			X	X				O	X	X	X	O	M								T2	P	P		P	P	P	P		P		P		
			X	X				O	X	X	X	O										P	P							P		P		
8) Backlap Rear			X	X				O	X	X	O	X	M								T2	P	P	P	P	P	P	P			P			
			X	X				O	X	X	O	X										P	P	P							P			

Wiring Schematic (S/N Below 51001)

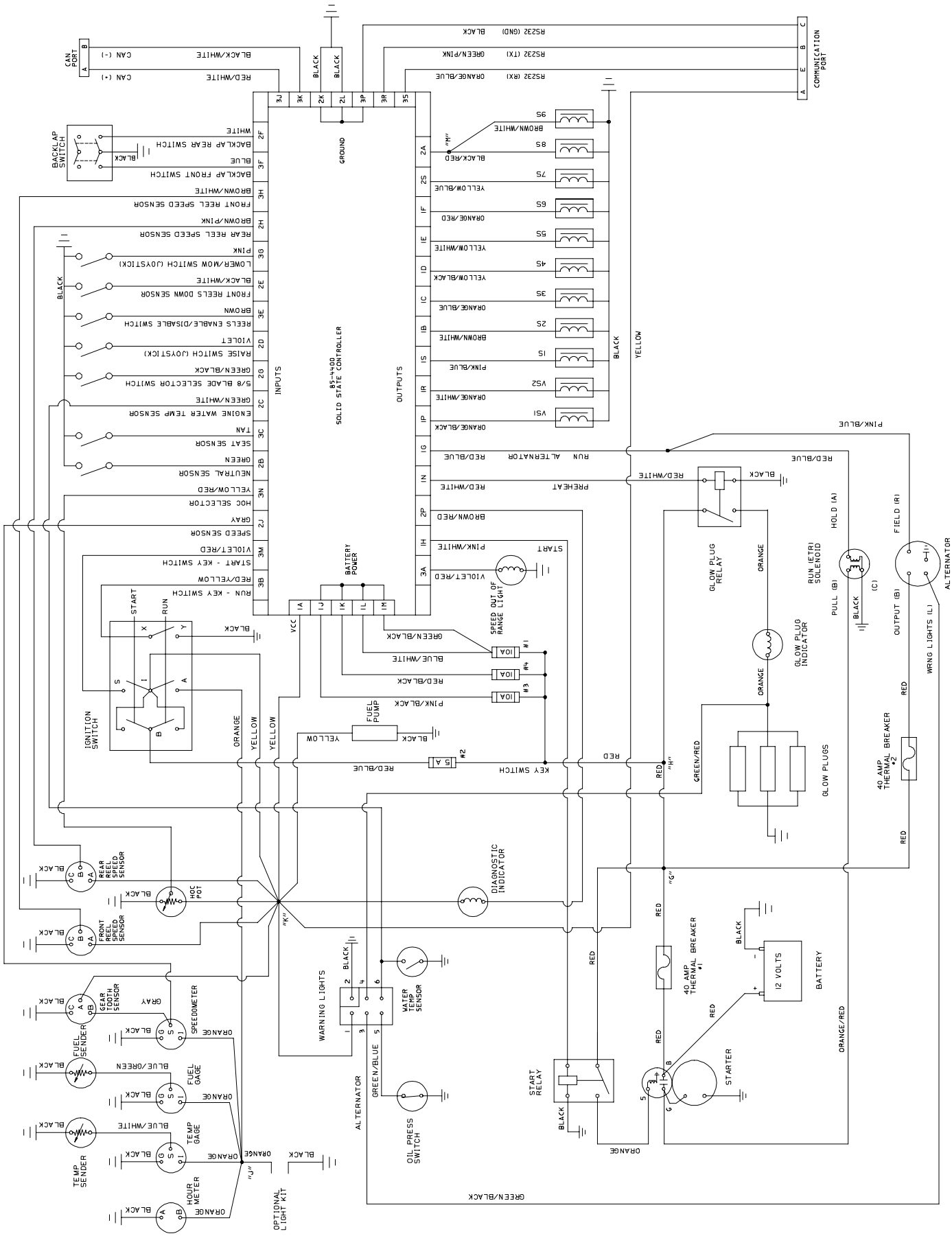

Wiring Schematic (S/N 51001 – 59999)

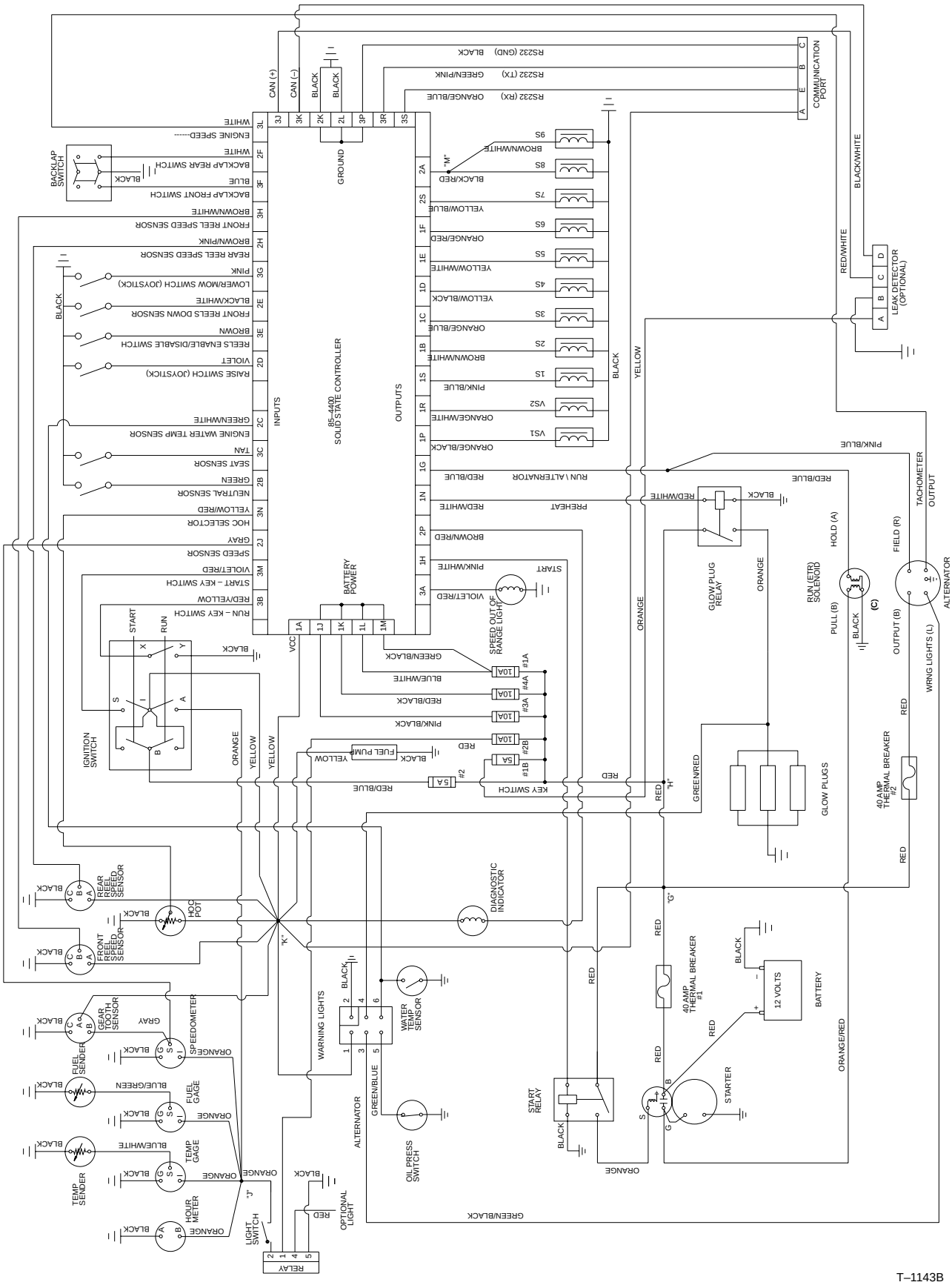

T–1143B

Wiring Schematic (S/N 60001 & Up)

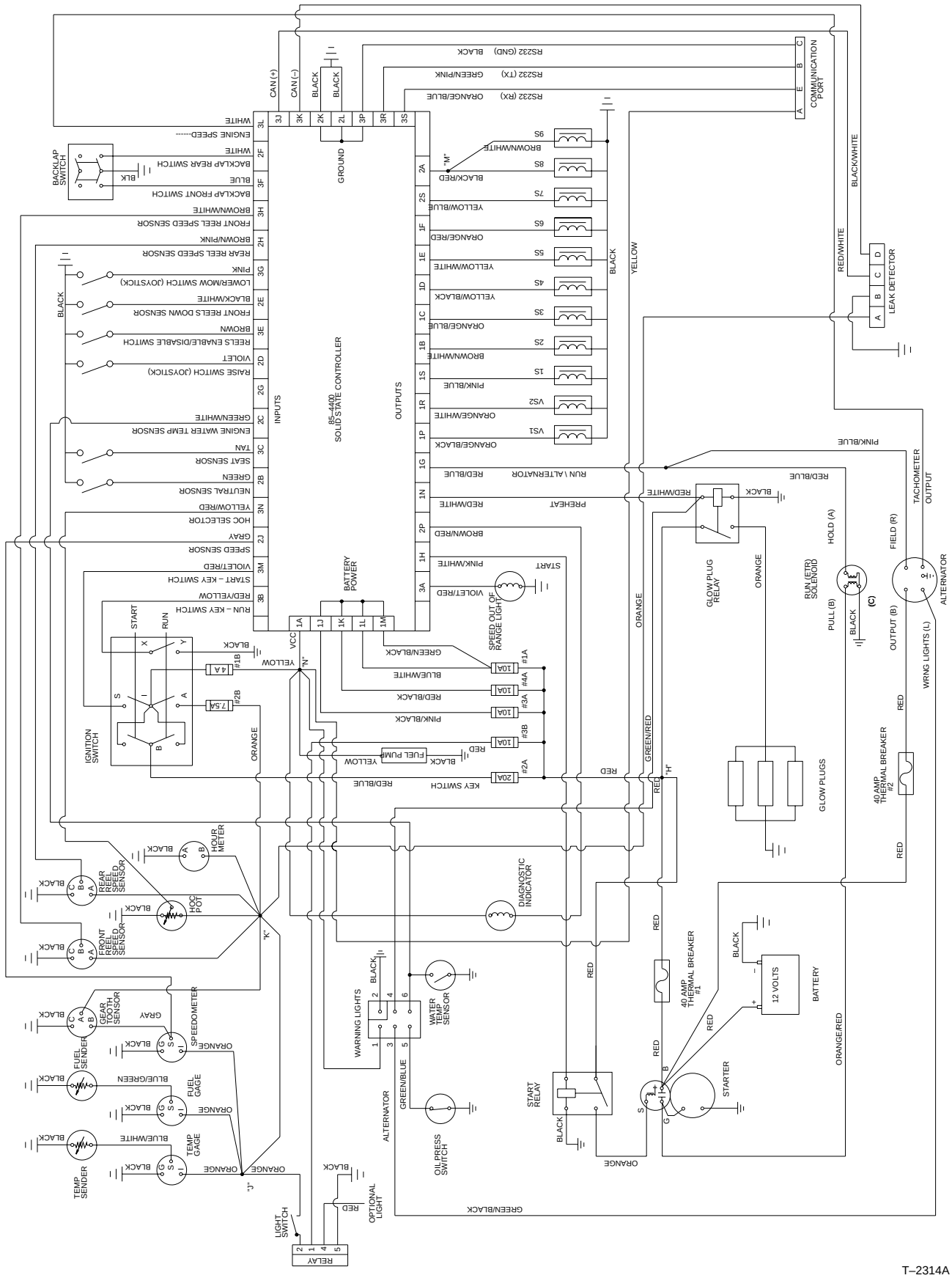

T–2314A

Wiring Schematic – Leak Detector

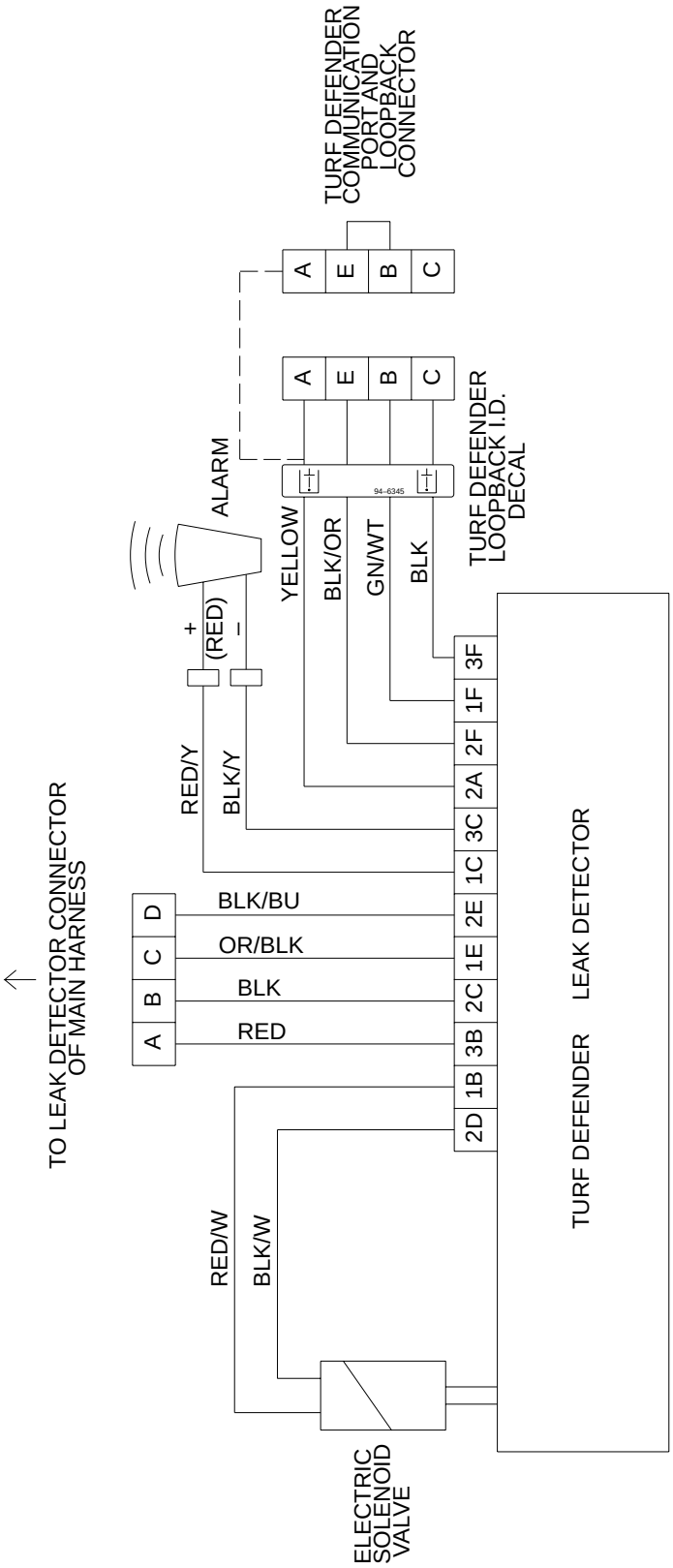

Special Tools

NOTE: Special tools may be ordered from:
Owatonna Tool Co.
2013 4th Street, NW
Owatonna, MN 55060

Some tools may bebe listed in the Reelmaster 5100-D Parts Catalog or sold under Toro Model Numbers. Some tools may also be available from a local supplier.

Digital Multimeter

The meter can test electrical components and circuits for current, resistance, or voltage drop.

NOTE: Toro recommends the use of a DIGITAL mutlimeter when testing electrical circuits. The high impedance (internal resistance) of a digital meter will ensure that excess current is not allowed through the meter. Excess current can cause damage to a circuit that is not designed to carry it.

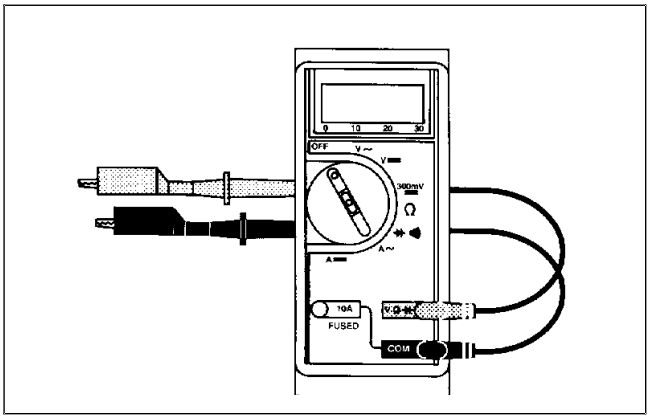

Figure 1

Inductive Ammeter (AC/DC Current Transducer – Hall Effect)

Use this tool, connected to a Digital multimeter for doing current draw tests. This tool can be useful when checking glow plug and starter circuits.

Skin-Over Grease

Special non-conductive grease which forms a light protective skin to help waterproof electrical switches and contacts (Fig. 2).

Toro P/N **505–47** 8 oz. (.24 L) can

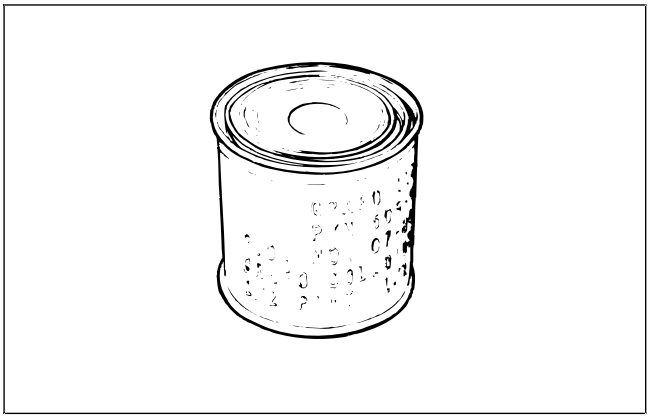

Figure 2

Diagnostic ACE Display

The diagnostic display (Fig. 4) is connected to the wiring harness connector near the electronic control unit (ECU) to help the user verfiy correct electrical functions of the machine.

When in “INPUTS DISPLAYED” mode, LED’s on the display illuminate to show input switches that are closed. When in “OUTPUTS DISPLAYED” mode, LED’s illuminate to show outputs turned on by the ECU.

Diagnostic ACE Tool, Toro P/N **85-4750**

RM5100-D/5300-D Overlay, V1.0, Toro P/N **85-4760**

TurfDefender Overlay, V1.0, Toro P/N **94-5386**

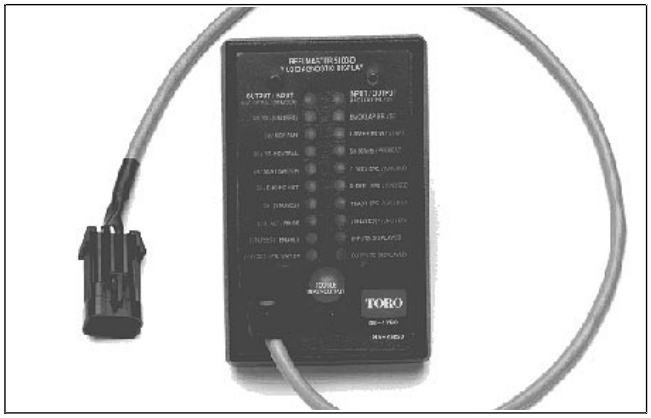

Figure 4

Troubleshooting

For all electrical problems, the use of the quick reference troubleshooting method is recommended. Using the Diagnostic ACE™ Display allows you to quickly find the source of the electrical problem.

For **intermittent electrical problems**, which are not repeatable, use of the Data Log System is recommended. The data log system records the actual state of machine inputs and outputs at the time of malfunction. Your Toro Distributor can then isolate the cause of the electrical problem.

Quick Reference Troubleshooting Guide

Controller Diagnostic Lamp

NOTE: See "Using the Diagnostic ACE" book, Form 92-800-SL for more information.

Controller Diagnostic Lamp

Before doing any troubleshooting, check green controller diagnostic lamp. If diagnostic lamp is *ON*, with key switch in RUN position, the electronic control unit (ECU) is functioning normally.

If diagnostic lamp is *FLASHING ON* and *OFF*:

1. ECU has detected an output with a short circuit.
2. ECU has detected an output with an open circuit.

Use diagnostic display to find which output is malfunctioning.

If the diagnostic lamp is *OFF*:

1. Loop-back connector is not attached.
2. Diagnostic light is burned out.
3. ECU is not powered on.
4. ECU is not functioning correctly.

Check electrical connections, input fuses and diagnostic light to find malfunction. Make sure loop-back connector is secured to wire harness connector.

Diagnostic ACE™ Display

Use diagnostic display tool to verify correct electrical function of the machine and to locate electrical malfunctions.

1. Park machine on a level surface, engage parking brake, lower cutting units and turn ignition key switch off.

2. Carefully disconnect loop-back connector from wire harness (Fig. 7).

3. Connect diagnostic display tool to communication connector on wiring harness (where loop-back connector was removed). Make sure correct overlay decal is installed on diagnositc display.

4. Turn ignition key switch ON, but DO NOT start the engine.

5. The "INPUTS DISPLAYED" LED, on lower right column of diagnositc display, should be on. If necessary, push input-output toggle switch on diagnostic display so "INPUTS DISPLAYED" LED is on. Do not hold the button down.

NOTE: Red text on overlay decal refers to input switches and green text to outputs.

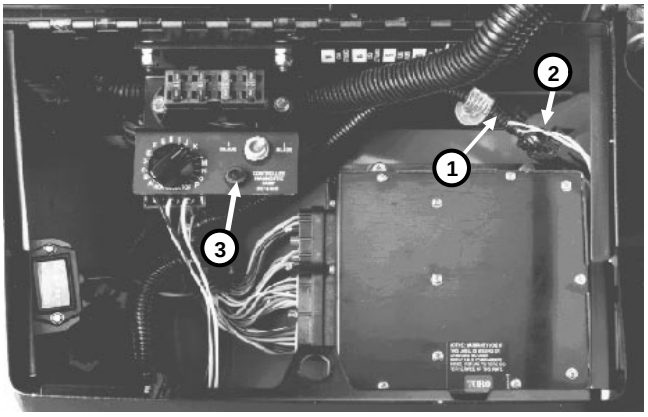

Figure 7

1. Wire harness and connector
2. Loop-back connector
3. Controller diagnostic lamp

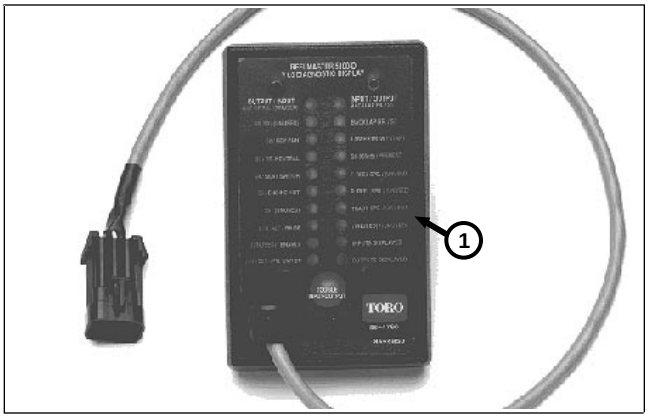

Figure 8

1. Diagnostic ACE™ Display

6. The diagnostic display will illuminate the LED associated with each of the inputs when that input switch is closed. Check each switch (input) by opening and closing switch, then verifying that corresponding LED goes on and off as switch position is changed. For example, with traction pedal in neutral, "TR. NEUTRAL" LED should be on, then go off, when traction pedal is moved out of neutral. Check function for each switch that can be changed manually.

7. If a switch is closed and corresponding LED does not go on, check all wiring and connections to switch and/or test switch with a continuity tester or ohm-meter. Replace any faulty switches and repair or replace any faulty wiring or connectors.

To verify output functions:

8. Do steps 1 - 4 in above procedure to connect diagnostic display, if not already connected.

9. If necessary, push input-output toggle switch on diagnositic display so "OUTPUTS DISPLAYED" LED is on.

NOTE: Red text on overlay decal refers to input switches and green text to outputs.

NOTE: It may be necessary to toggle between "INPUTS DISPLAYED" and "OUTPUTS DISPLAYED" several times to do this procedure. To toggle back and forth, press toggle button once. This may be done as often as necessary. DO NOT hold button.

10. Sit on the seat and attempt to operate desired function of machine – DO NOT start engine. Put input switches in required position to allow desired functions to occur as defined by Logic Chart on page 4. The appropriate output LED's should illuminate to indicate that the ECU is turning on that function.

If any output LED is *FLASHING ON* and *OFF*, this indicates and electrical problem with that OUTPUT. To reset a flashing LED, turn the key switch OFF, then back ON.

If no output LED's are flashing on and off, but the correct output LED's do not illuminate, verify that the required input switches are in the necessary positions to allow that function to occur. If input switches are correct, but output LED's are not correct, this indicates a controller malfunction.

If output LED's are correct, but machine does not function properly, this indicates a hydraulic problem.

NOTE: Due to electrical system constraints, the output LED's for "START", "PREHEAT" and "ETR/ALT" may not flash on and off, even though an electrical problem may exist for one of those functions. If the machine problem appears to be with one of these functions, see the troubleshooting charts.

IMPORTANT: The diagnostic display must not remain connected to the machine. When done using diagnostic display, carefully disconnect it. Connect loop-back connector to wire harness connector. Machine will not operate without loop-back connector installed on wire harness. Store diagnostic display in dry, secure location in shop, not on machine.



Figure 8A

1. Diagnostic ACE™ Display

Retrieving Stored Faults

NOTE: The machine may require installaton of updated software for this function to operate. This required software was installed on machines starting with S/N 70001. Older machines can have new software installed. Contact your Toro Distributor for assistance.

1. Turn ignition key switch to OFF. Unplug loopback connector and connect Diagnostic ACE to the ECU harness connector.

2. Move the Lower–Mow/Raise lever to the RAISE position and hold.

3. Turn Ignition key switch to ON while continuing to hold the lever in the RAISE position until the top left light on the Diagnostic ACE comes on (approximately 2 seconds).

4. Make sure Diagnostic ACE is set to OUTPUTS.

5. Release the RAISE lever to the center position.

   There will be 8 records displayed. The fault is displayed on the 8th record. Each record will be displayed for 10 seconds. Records will repeat until the Ignition switch is turned to OFF. The machine will not start in this mode.

6. Observe Diagnostic ACE for the playback of the retained fault in the ECU memory. The problem circuit will be flashing.

Clearing Fault Memory

Once a fault is repaired, it must be must be cleared from the ECU memory so any future fault can then be stored.

1. Turn Ignition key switch to OFF.

2. Move the Backlap switch to the FRONT or REAR position.

3. Move the Enable/Disable switch to the ENABLE position.

4. Move the Lower–Mow/Raise lever to the RAISE position and hold.

5. Turn Ignition key switch to ON while continuing to hold the lever in the RAISE position until the Reel Control Lamp on the steering column starts to flash (approximately 2 seconds).

6. Release the RAISE lever and turn Ignition switch to OFF. Move the Backlap switch to OFF and the Enable/Disable switch to DISABLE. **Fault memory is now cleared.**

IMPORTANT: The Diagnostic ACE display must not be left connected to the machine. After using the Diagnostic ACE, disconnect it from the machine and reconnect loopback connector to the harness connector. The machine will not operate without the loopback connector installed to the harness. Store Diagnostic ACE in a dry, secure location.

TurfDefender Leak Detector

The TurfDefender™ is an electronic hydraulic fluid leak detection device that fits inside the hydraulic tank of your machine. It is a pressure based system which requires a sealed hydraulic tank to function properly. Very small changes to the oil level in the sealed tank result in a large movement of the leak detector's internal float. The TurfDefender's internal microprocessor analyzes the float movement and determines if there is a leak in the system.

- Turn ignition key to "ON" position start the system. The system will reset itself whenever the ignition key is moved to "OFF" position. Wait 5 seconds, then move key to "ON" position to restart the system.
- When machine is started, the alarm will give one short beep to indicate that everything is operating properly. If the alarm makes no noise at all, it should be checked by a mechanic.
- If the alarm gives 4 short beeps it means a system problem has been detected and it should be checked by a mechanic. The 4 beep pattern will continue for approximately 1–1/2 minutes, then stop, unless the ignition key is moved to "OFF" position.

  Note: The low or high oil level 4 beep signal may occur if machine is started on a slope. Move machine to a level surface, move ignition key to "OFF" position, wait 5 seconds, then move key to "ON" position to restart the system.
- If the alarm gives a loud continuous beep while mowing and shuts off the cutting units, it means that a leak has been detected. On the traction unit, the red light on the steering console will also blink indicating the ECU has shut off the cutting units.

Checking Leak Detector Operation

The operation of the TurfDefender™ should be checked if any of the following conditions occur:

a. No beeps are heard when ignition switch is turned "ON".

b. Any time the machine gives a series of 4 short beeps.

c. False alarms are observed.

1. Park machine on a level surface, stop the engine and engage the parking brake.

2. Open control panel cover. Locate leak detector harness loopback connector with hydraulic symbol tag. Carefully unplug loopback connector from harness connector.



3. Connect the Diagnostic ACE display connector to the correct harness loopback connector. Install TurfDefender overlay decal (supplied with leak detector kit) onto Diagnostic ACE (Fig. 8b).

4. Turn the key switch to the ON position, but do not start machine.

Note: Red text on the overlay decal refers to inputs and green text refers to outputs.

5. The red "Inputs displayed" LED (Light Emitting Diode), on lower right column of the Diagnostic ACE, should be illuminated. If green "Outputs displayed" LED is illuminated, press and release the toggle button, on Diagnostic ACE, to change LED to "Inputs displayed". Do not hold button down (Fig. 8b).

If TurfDefender is functioning normally:

1. When the "Inputs displayed" LED is lit, the actual Float position (1 or 2 LED's on left row) and "Oil level OK" LED – should be displayed (Fig. 8c).

2. Press toggle button until green "Outputs displayed" LED is lit. "Valve ON", "data line" and "self diagnostic"LED's should be lit steadily. "Alarm ON" LED may be displayed temporarily (about 5 seconds) (Fig. 8d).

Note: If "data line" or "self diagnostic" LED's are blinking, there is a problem in the system.

If No beeps are heard:

1. Check alarm wires to make sure they are not disconnected, broken or "+" and "–" reversed.

2. Toggle "outputs displayed" on Diagnostic ACE display (Fig. 8d).

- Alarm open circuit (LED blinking): Check / replace TurfDefender alarm or wires.
- Alarm short circuit (LED blinking): Check / replace TurfDefender alarm or wires.

If 4 beeps are heard:

The most common cause for a 4 beep signal is from an improper oil level reading. Make sure machine is on a level surface when checking oil level. Since oil level will vary with temperature, it is best to check when cool.

1. When toggling "input", a LED should display (Fig. 8c) any of the following problems diagnosed by the TurfDefender:

- Oil level low: Position machine on a level surface and fill to proper level.
- Oil level high: Position machine on a level surface and remove excess oil until proper level is attained.
- Oil too hot: Allow machine to cool and clean any debris from oil cooler.
- Air leak in system: Assure tank cap is tight or check for leak in tank.

  Note: Only large air leaks can be detected by hand held Diagnostic ACE. A leakdown test is required to identify small air leaks. Consult your Authorized Toro Distributor for assistance.

2. When toggling “output” a LED should display (Fig. 8d) any of the following problems diagnosed by the TurfDefender:

- Valve open circuit (LED blinking): Check / replace TurfDefender electric solenoid valve or wires.
- Valve short circuit (LED blinking): Check / replace TurfDefender electric solenoid valve or wires.
- Self diagnostic LED Blinking: Internal circuit failure in TurfDefender. Consult your Authorized Toro Distributor for assistance.
- Data Line LED Blinking: Problem with communications between machine and leak detector; or problem with wires. Consult your Authorized Toro Distributor for assistance.

Note: If machine must be operable with leak detector disabled, unplug leak detector 4–pin connector from 4–pin connector of main harness. Do not unplug leak detector alarm.

If false alarms are observed:

1. Oil level may be low causing air to be drawn out of system. Check oil level.

2. Extremely hard left turns can cause oil to slosh to the right, exposing suction line and purging air out of system. Normal maneuvering should not cause this condition.

3. Air leak in system. Check to make sure cap is securely on tank. Contact your local authorized Toro Distributor for further assistance with air leak problem.

4. To check for a system problem, install hand held Diagnostic ACE, toggle input/output and check for any problems previously discussed.

Note: The system will reset itself whenever the ignition key is turned to “OFF” position. The hand held Diagnostic ACE must be connected and observed during a false alarm. Once the ignition key is turned to “OFF” position, the TurfDefender will reset itself.

5. Your Authorized Toro Distributor has equipment to analyze system problems.

IMPORTANT: The Diagnostic ACE displays must not be left connected to the machine. It is not designed to withstand the environment of the machine’s every day use. When done using Diagnostic ACE, disconnect them from the machine and reconnect loopback connectors to harness connectors. Machine will not operate without loopback connectors installed on harnesss. Store Diagnostic ACE in dry, secure location in shop, not on machine.

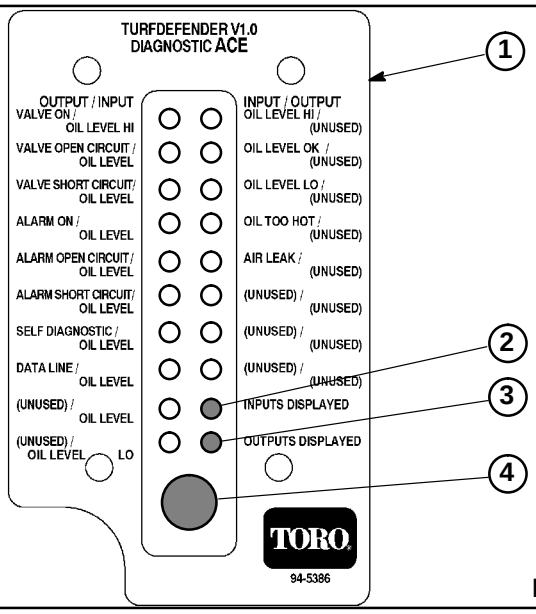

Diagnostic ACE Display Functions

1. **Overlay decal (English shown)**
2. **“Inputs Displayed” LED (Red)**
3. **“Outputs Displayed” LED (Green)**
4. **Toggle button**

Figure 8b

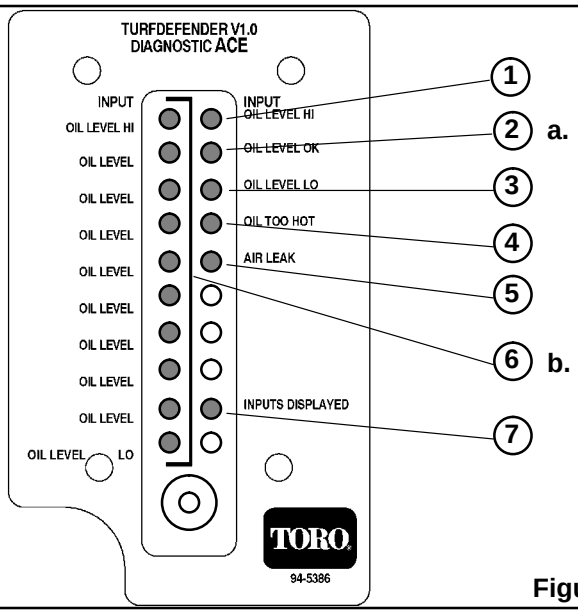

Using “Inputs Displayed” (Red Text)

1. **LED lit if oil level is too high**
2. **LED lit if oil level is OK**
3. **LED lit if oil level is too low**
4. **LED lit if oil is too hot**
5. **LED lit if system air leak has been detected**
6. **One or two LED’s lit displaying relative position of the Turfdefender’s internal float.**
7. **“Inputs Displayed” LED “ON” (Red)**

Normal Operation:

a. “Oil Level OK” LED lit

b. 1 or 2 LED’s lit on left column

Figure 8c

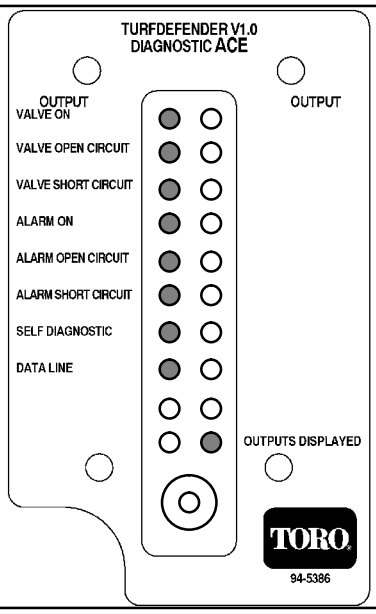

Using “Outputs Displayed” (Green Text)

Normal Operation:

a. “Valve ON” LED lit steadily

b. “Self Diagnostic” LED lit steadily

c. “DATA LINE” LED lit steadily

d. “Alarm ON” LED lit temporarily

Problem Diagnosed:

The appropriate LED will blink to identify the problem

Figure 8d

Starting Problems

Condition	Possible Cause	Correction
All electrical is dead, including gauges.	Low battery charge.	Charge battery. Replace battery if it will not hold a charge.
	Thermal circuit breaker No. 1 open.	Find cause for open circuit breaker and correct. Circuit breaker will reset automatically after has cooled.
	5A key switch fuse open.	Check fuse and replace if fuse is open. If fuses burn out often, find and correct cause. NOTE: If auxillary lights are added, this fuse must be replaced with a 15A fuse.
	Faulty key switch wiring.	Repair wiring.
	Faulty key switch.	Test key switch and replace if necessary.
Starter solenoid clicks, but starter will not crank. (If solenoid clicks, problem is not in interlock system or controller.)	Low battery charge.	Charge battery. Replace battery if it will not hold a charge.
	Loose or corroded battery cables. Loose or corroded ground.	Clean and tighten or repair as necessary.
	Faulty wiring at starter.	Repair wiring.
	Loose starter mounting bolts.	Clean mounting surface and tighten bolts.
	Faulty starter.	Repair or replace starter.
	Faulty starter solenoid.	Replace starter solenoid.

Condition	Possible Cause	Correction
Nothing happens when start attempt is made (control panel lights and gauges DO operate with ignition key switch in ON position).	Faulty ignition (key) switch or wiring.	Test switch and replace if faulty. Correct wiring problem if necessary.
	Traction neutral switch circuit open.	Check traction control linkage and adjust or repair.
	Short circuit or open circuit between controller and start relay.	Check wiring and repair if necessary.
	Start relay faulty.	Test relay and replace if necessary.
	Wiring between start relay and starter faulty.	Check wiring and repair if necessary.
	Start solenoid faulty.	Test start solenoid and replace if necessary.
Engine starts, but dies when ignition key switch is released from start position.	Run solenoid out of adjustment.	Adjust run solenoid.
	Run solenoid faulty.	Replace run solenoid.
	Run solenoid wiring faulty.	Repair wiring.
	Faulty high engine water temperature shut-down switch (engine not overheated) or wiring.	Check switch and wiring and replace or repair if necessary.
Starter cranks but engine will not start.	Engine not cranking fast enough.	Check battery and cable connections. Charge battery. Replace battery if it won't accept a charge. Repair wiring if necessary.
	Run solenoid out of adjustment	Adjust run solenoid.
	Faulty run solenoid.	Replace run solenoid.
	Problem is not electrical.	See Troubleshooting section of Chapter 3 - Engine.
Starter cranks, but should not when traction pedal is depressed.	Traction neutral switch circuit closed.	Check traction neutral switch adjustment and adjust if faulty.
		Test traction neutral switch and replace if faulty.
		Check traction neutral switch wiring and repair if faulty.

General Run and Transport Problems

Condition	Possible Cause	Correction
Engine continues to run, but should not, when ignition key is turned off.	Engine fuel lever or run solenoid stuck in “on” position.	Check operation of run solenoid and adjust or replace if necessary. Make sure fuel stop lever moves without sticking and repair if necessary.
	Ignition switch faulty.	Replace ignition switch.
Engine continues to run, but should not, when traction pedal is engaged with no operator on seat.	Seat switch circuit is closed.	Check seat plate hinges and seat support pin and repair if faulty. Check for water soaked seat cushion. Test seat switch and replace if faulty. Check seat switch wiring and repair if faulty.
	Traction neutral switch circuit closed.	Check traction neutral switch adjustment and adjust if faulty. Test traction neutral switch and replace if faulty. Check traction neutral switch wiring and repair if faulty.
Engine kills during operation, but restarts.	Seat lifting off seat switch.	Instruct operator to sit back in seat during operation. Operate machine slower when operating in rough terrain.
	Seat switch circuit open.	Check seat plate hinges and seat support pin and repair if faulty. Test seat switch and replace if faulty. Check seat switch wiring and repair if faulty.
	Faulty ignition switch.	Replace switch.
	Faulty ignition switch wiring.	Repair wiring.

Condition	Possible Cause	Correction
Engine kills when traction pedal is depressed.	Seat lifting off seat switch.	Instruct operator to sit back in seat during operation. Check seat plate hinges and seat support pin and repair if faulty.
	Seat switch circuit open.	Test seat switch and replace if faulty. Check seat switch wiring and repair if faulty.
Battery does not charge.	Alternator belt slipping.	Adjust belt tension.
	Faulty wiring.	Check and repair wiring.
	Malfunctioning alternator.	Repair or replace alternator.
	Faulty battery.	Replace battery.

Cutting Unit Operation Problems

Condition	Possible Cause	Correction
Cutting units remain engaged, but should not, with no operator on seat.	Seat switch circuit closed.	Check seat plate hinges and seat support pin and repair if faulty. Check for water soaked seat cushion. Check seat switch and replace if faulty. Check seat switch circuit wiring and repair if faulty.
Cutting units run, but should not, when raised (but shut off with Enable/Disable switch).	Front reels down sensor closed.	Test front reels down sensor and replace if faulty. Check front reels down sensor wiring and repair if faulty.

Condition	Possible Cause	Correction
Cutting units run, but should not, when raised and do not shut off with Enable/Disable switch.	Both the front reels down sensor and enable switch circuits are closed.	Check front reels down sensor and enable switch and replace if necessary. Check wiring to both switches and repair if necessary.
	Hydraulic problem.	See Troubleshooting section of Chapter 4 - Hydraulic System.
Cutting units run, but should not, when lowered with Enable/ Disable switch in disable position.	Enable/Disable switch circuit closed.	Test Enable/Disable switch and replace if faulty. Check Enable/Disable switch wiring and repair if faulty.
No cutting units operate in either direction (raise and lower function OK).	Seat lifting off seat switch.	Instruct operator to sit back in seat during operation. Check seat plate hinges and seat support pin and repair if faulty.
	Seat switch circuit open.	Check seat switch and replace if faulty. Check seat switch wiring and repair if faulty.
	Enable/Disable switch circuit open.	Check Enable/Disable switch and replace if faulty. Check Enable/Disable switch wiring and repair if faulty.
	Front reels down sensor circuit open.	Check front reels down sensor and replace if faulty. Check front reels down sensor wiring and repair if faulty.
	Solenoid problem.	Test solenoid and replace if faulty. Check wiring to solenoid and repair if necessary.
	Hydraulic problem.	See Troubleshooting section of Chapter 4 - Hydraulic System.

Condition	Possible Cause	Correction
Front cutting units do not operate in either direction (raise and lower function OK).	Problem with solenoid S1.	Test solenoid S1 and replace if faulty. Check wiring to S1 solenoid and repair if faulty.
	Problem with S7 solenoid.	Check wiring to S7 solenoid and repair if faulty.
	Hydraulic problem.	See Troubleshooting section of Chapter 4 - Hydraulic System.
Rear cutting units do not operate in either direction (raise and lower function OK).	Problem with solenoid S2.	Test solenoid S2 and replace if faulty. Check wiring to S2 solenoid and repair if necessary.
	Hydraulic problem.	See Troubleshooting section of Chapter 4 - Hydraulic System.
Cutting units operate, but speed is either too slow or too fast and is not regulated by changing the HOC selector or traction speed.	Problem with solenoid VS1 or VS2 (only front or rear cutting units will be affected).	Test solenoid VS1 (front cutting units) or VS2 (rear cutting units) and replace if faulty. Check wiring to VS1 or VS2 solenoid and repair if faulty.
	Problem with reel speed sensor (only front or rear cutting units will be affected).	Check affected reel speed sensor (front or rear) and replace if faulty. Check wiring to affected reel speed sensor and repair if faulty.
	Problem with HOC selector.	Check calibration of HOC selector and replace if necessary. Check wiring to HOC selector and repair if necessary.
	Problem with traction speed sensor.	Check speedometer for proper performance. If it is not functioning, check operation of traction speed sensor and replace if faulty. Check wiring to traction speed sensor and repair if necessary.

Condition	Possible Cause	Correction
No cutting units lower.	Lower - Mow switch circuit is open.	Check for faulty Lower-Mow switch (joystick). Check Lower-Mow switch wiring and repair if faulty.
	Problem with solenoid S6.	5A SOL S3/S6 fuse open. If fuses burn out often, find and correct cause.
	Faulty S6 solenoid coil.	Check S6 solenoid wiring and repair if faulty.
	Hydraulic problem.	See Troubleshooting section of Chapter 4 - Hydraulic System.
No cutting units raise.	Raise switch circuit open .	Test for faulty Raise switch (joystick). Check Raise switch wiring and repair if faulty.
	Problem with S7 solenoid.	Test solenoid S7 and replace if faulty. Check wiring to solenoid S7 and repair if necessary.
	Hydraulic problem.	See Troubleshooting section of Chapter 4 - Hydraulic System.
Left (No. 4) and right (No. 5) front cutting units will not raise/lower, but other cutting units raise and lower OK.	Problem with solenoid S3.	Test solenoid S3 and replace if faulty. Check wiring to solenoid S3 and repair if necessary.
	Hydraulic problem.	See Troubleshooting section of Chapter 4 - Hydraulic System.
Center (No. 1) cutting unit will not raise/lower, but other cutting units raise and lower OK.	Problem with solenoid S4.	Test solenoid S4 and replace if faulty. Check wiring to solenoid S4 and repair if necessary.
	Hydraulic problem.	See Troubleshooting section of Chapter 4 - Hydraulic System.

Condition	Possible Cause	Correction
Rear (No. 2 and 3) cutting units will not raise/lower, but other cutting units raise and lower OK.	Problem with solenoid S5.	Test solenoid S5 and replace if faulty. Check wiring to solenoid S5 and repair if necessary.
	Hydraulic problem.	See Troubleshooting section of Chapter 4 - Hydraulic System.
Front cutting units do not backlap, but run forward instead.	Problem with solenoid S8.	Test solenoid S8 and replace if faulty. Check wiring to solenoid S8 and repair if necessary.
	Hydraulic problem.	See Troubleshooting section of Chapter 4 - Hydraulic System.
Front cutting units do not backlap, but ALL cutting units run forward instead.	Front backlap switch circuit open.	Test front backlap switch and replace if faulty. Check wiring to front backlap switch and repair if necessary.
Rear cutting units do not backlap, but run forward instead.	Problem with solenoid S9.	Test solenoid S9 and replace if faulty. Check wiring to solenoid S9 and repair if necessary.
	Hydraulic problem.	See Troubleshooting section of Chapter 4 - Hydraulic System.
Rear cutting units do not backlap, but ALL cutting units run forward instead.	Rear backlap switch circuit open.	Test rear backlap switch and replace if faulty. Check wiring to rear backlap switch and repair if necessary.

Verify Interlock System Operation

The purpose of the interlock system is to prevent the engine from cranking or starting unless the traction pedal is in NEUTRAL the Enable/Disable switch is in DISABLE and the Lower-Mow/Raise control is in the neutral position. Also, the engine will stop when the traction pedal is depressed with the operator off the seat.

CAUTION

The interlock switches are for the operator's protection, so do not disconnect them. Check operation of the switches daily to assure interlock system is operating. If a switch is defective, replace it before operating. Do not rely entirely on safety switches - use common sense!

To check interlock system operation:

1. In a wide open area free of debris and bystanders, lower cutting units to the ground. Stop engine.

2. Sit on the seat. Depress traction pedal in forward and reverse directions, while trying to start the engine. If engine cranks there may be a malfunction in the interlock system. Use Diagnostic Display to help isolate problem and repair immediately. If engine does not crank, proceed to step 3.

3. Sit on seat. Position ENABLE/DISABLE switch in ENABLE. Try to start the engine. If engine cranks, there may be a malfunction in the interlock system. Use Diagnostic Display to help isolate problem and repair immediately. If engine does not crank, proceed to step 4.

4. Sit on seat and start engine. Position the ENABLE/DISABLE switch in ENABLE. Move the LOWER-MOW/RAISE control forward to turn the cutting units ON. Rise off the seat slowly. The cutting units should stop. If cutting units stop, the switch is operating correctly. Proceed to step 5. If cutting units do not stop, there is a malfunction in the interlock system. Use Diagnostic Display to help isolate problem and repair immediately.

5. Position the ENABLE/DISABLE switch in DISABLE. Sit on seat and start the engine. Raise the cutting units to the transport position. Position the ENABLE/DISABLE switch in ENABLE. Move the LOWER-MOW/RAISE control forward to lower the cutting units. If any of the cutting units begin operating before the front left and right cutting units have reached the turn around position, there may be a malfunction in the interlock system. Use Diagnostic Display to help isolate problem and repair immediately. If the cutting units remain OFF until the turnaround position; proceed to step 6.

6. Sit on seat and start the engine. Lower the cutting units to the ground. Position the ENABLE/DISABLE switch in ENABLE. Raise the cutting units. If the front right or left cutting units raise past the turnaround position, there may be a malfunction in the interlock system. Use Diagnostic Display to help isolate problem and repair immediately.

Testing

Testing of the electrical system has been greatly simplified by use of the ACE ™ Diagnostic Display, Data Log system and ToroPC software. Before testing or replacing any electrical components, it is recommended that you verify electrical performance of the part(s) in question by using the above mentioned tools (see Troubleshooting section of this chapter).

This section will define given components, and the tests that can be performed on those components, when those parts are disconnected from the electrical system.

For accurate resistance and/or continuity checks, electrically disconnect the component being tested from the circuit (e.g. unplug the seat switch connector before doing a continuity check).

CAUTION

When testing electrical components for continuity with a volt-ohm meter or continuity tester, make sure that power to the circuit has been disconnected.

NOTE: Electrical troubleshooting of any 12 Volt power connection can also be performed through voltage drop tests without disconnection of the component.

Ignition Key Switch

The ignition (key) switch has three positions (OFF, START and RUN). The terminals are marked as shown in Figure 9.

The circuitry of the ignition switch is shown in the chart (Fig. 10). With the use of a continuity tester, the switch functions may be tested to determine whether all circuits are being completed while the key is moved to each position.

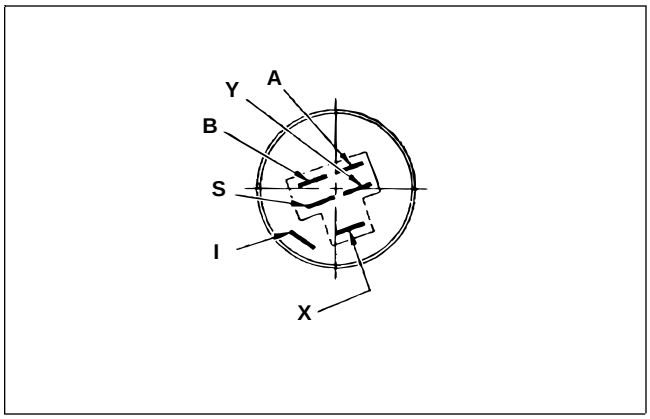

Figure 9

POSITION	CONTINUITY AMONG TERMINALS	OTHER CIRCUITS MADE
1. OFF	NONE	NONE
2. RUN	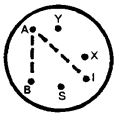 B + I + A	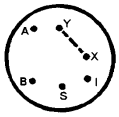 X + Y
3. START	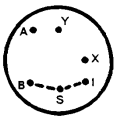 B + I + S	NONE

Figure 10

Electronic Control Unit (ECU)

The Toro electronic control unit (ECU) senses the condition of various switches, such as the seat switch, cutting unit down switches, traction neutral switch, etc., and directs power output to allow certain machine functions, such as engine run, cutting units engage, etc.

Because of the solid state circuitry built into the controller, there is no method to test it directly. The controller may be damaged if an attempt is made to test it with an electrical test device, such as a volt-ohm meter.

IMPORTANT: Before welding on the machine, disconnect both battery cables from the battery, disconnect both wire harness connectors from the electronic control unit and disconnect the terminal connector from the alternator to prevent damage to the electrical system.

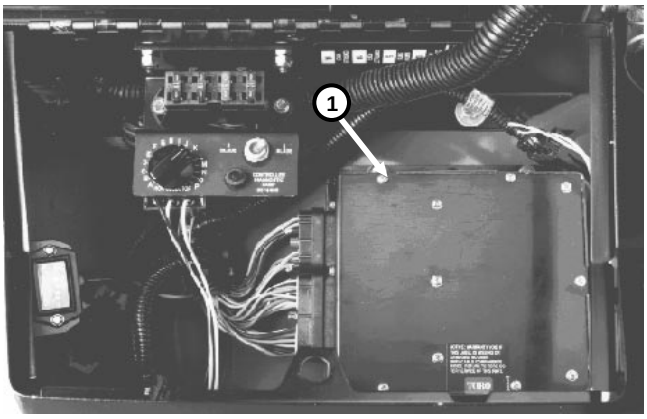

Figure 11

1. Electronic control unit (ECU)

Seat Switch

The seat switch is a proximity type, normally open (NO) reed switch that closes when the operator is on the seat. With the operator on the seat, the magnet on the bottom of the seat activates the reed switch causing it to close and complete the circuit.

1. Raise the seat to get access to the seat switch wiring connector.

2. Disconnect the seat switch wiring connector and install a continuity tester or ohm meter between the two leads of the seat switch.

3. Lower the seat. The continuity tester should show no continuity.

NOTE: Make sure the compression spring holds the seat up off the seat switch when there is no operator on the seat.

4. Have the operator sit on the seat, slowly depressing the seat switch magnet. The continuity tester should show continuity as the seat approaches the bottom of its travel.

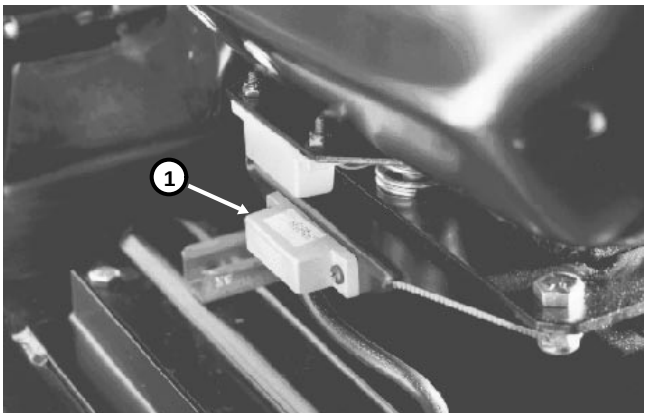

Figure 12

1. Seat switch

Traction (Neutral) Switch

The traction switch is a normally closed and opens when traction pedal is depressed in either direction. The switch is located on the right side of the hydrostatic transmission.

IMPORTANT: The traction switch has three (3) terminals. Make sure the wires are connected to the "COMMON" and "NO" terminals.

Test the switch by disconnecting the wires from the switch terminals and connecting a continuity tester across the two terminals that had wires connected to them. With the engine turned off, slowly push the traction pedal in a forward and reverse direction while watching the continuity tester. There should be indications that the traction switch is opening and closing. Allow the traction pedal to return to neutral. There should be continuity across the terminals. (See Replacing the Traction Switch in the Repairs section of this chapter for replacement and adjustment procedures.)

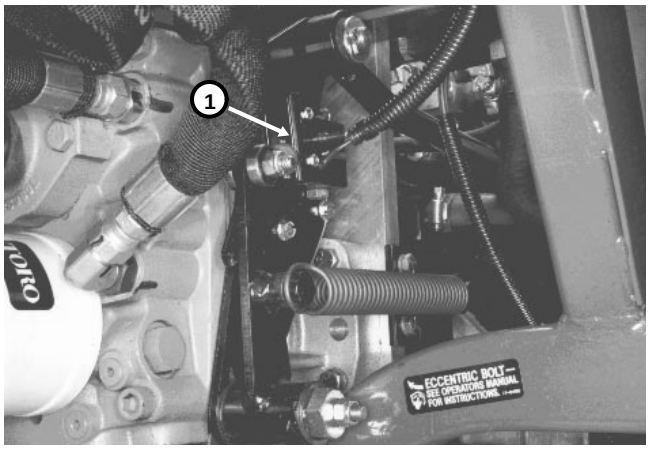

Figure 13

1. Traction (neutral) switch

Cutting Unit Down Switch

The cutting unit down switch is a normally open (NO) reed switch located on the left front lift arm that closes when the lift arm is in the lowered position. As the lift arm is lowered a magnet in the lift arm causes the reed switch to close and complete the circuit.

1. Disconnect the switch wire connector and install a continuity tester or ohm meter between the two leads of the switch.

2. With the lift arm in the lowered position the tester should show continuity. With the lift arm in the raised position, the tester should show no continuity.

NOTE: When the Enable/Disable switch is in the ENABLE position, the controller uses the input from this switch to turn the cutting units on and off. When raising the cutting units with the Enable/Disable switch in ENABLE, the cutting units lift part way to a "turn around" position.

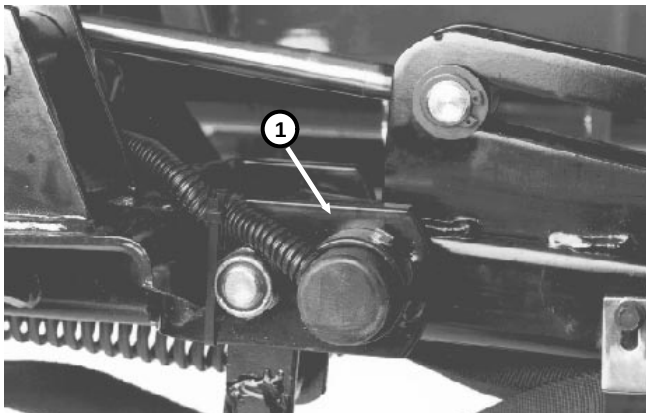

Figure 14

1. Cutting unit down switch

Lower-Mow/Raise Switches (Joystick)

The Lower-Mow/Raise Control has two (2) normally open (NO) switches, one for the Lower-Mow function and one for the Raise function. Each switch is normally open and closes when the joystick is moved (Fig. 15).

Test each switch by disconnecting the wiring connector from the switch and connecting a continuity tester across the two terminals of the switch being tested.

Lower-Mow Switch

With the engine turned off, move the joystick forward, then allow it to return to neutral while watching the continuity tester. There should be indications that the switch is opening and closing. With the joystick in the neutral position there should be no continuity across the terminals.

Lower-Mow Switch

With the engine turned off, move the joystick toward the rear, then allow it to return to neutral while watching the continuity tester. There should be indications that the switch is opening and closing. With the joystick in the neutral position there should be no continuity across the terminals.

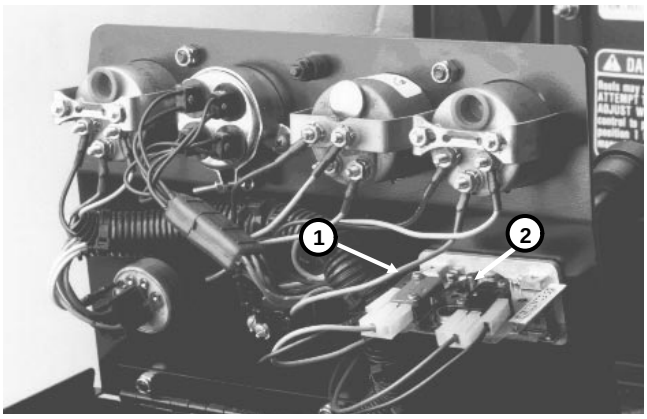

Figure 15

1. Lower-mow switch **2. Raise switch**

Enable/Disable Switch

Test the Enable/Disasble switch by disconnecting the wires from the switch and connecting a continuity tester across the terminals of the switch.

With the switch in the DISABLE position, the tester should show no continuity. With the switch in the ENABLE position, the tester should show continuity.

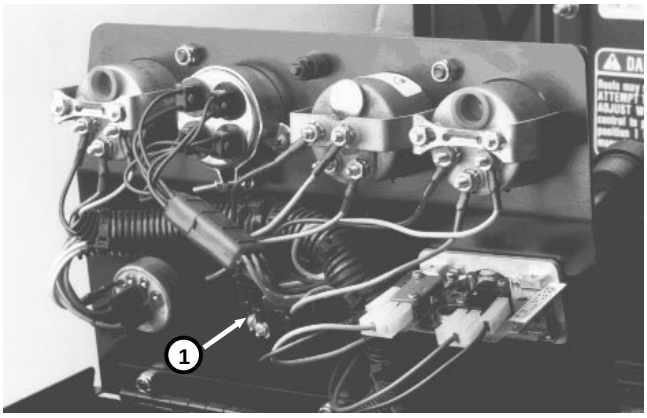

Figure 16

1. Enable/Disable switch

Backlap Switch

The Backlap switch is a three-way switch (Fig. 17). Test the switch by disconnecting the wires and connecting a continuity tester across terminals of switch.

With the switch OFF, the tester should show no continuity across terminals 4 – 5 or 5 – 6.

With the switch in the FRONT position (toward keyway), tester should show continuity across terminals 4 and 5.

With the switch in the REAR position (away from keyway), tester should show continuity across terminals 5 and 6.

Terminals on switch	Wire color
1	(Not used)
2	(Not used)
3	(Not used)
4	Blue
5	Black
6	White

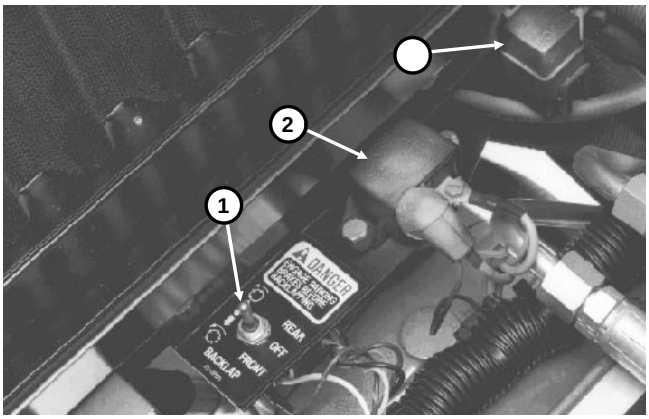

Figure 17

1. Backlap switch
2. Glow relay
3. Start relay

Start Relay

To test the start relay (Fig. 17), disconnect the relay wire connector and install a continuity tester between the relay terminals (terminals 30 and 87) (Fig. 18). The relay should make and break continuity at terminals 30 and 87 as 12 V.D.C. is connected and disconnected to terminal 85 with terminal 86 connected to ground.

Resistance specifications:

Terminals 85 and 86 = 80 to 90 Ohms

Terminals 30 and 87a (normally closed) = continuity

Terminals 30 and 87 (normally open) = continuity when 12V DC is applied to terminals 85 and 86

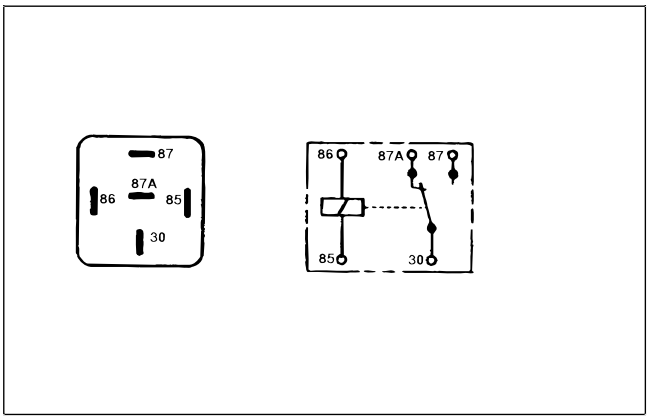

Figure 18

Glow Relay

To test the glow relay (Fig. 17), disconnect the relay wire connector and install a continuity tester between the relay terminals (terminals 30 and 87) (Fig. 19). The relay should make and break continuity at terminals 30 and 87 as 12 V.D.C. is connected and disconnected to terminal 85 with terminal 86 connected to ground.

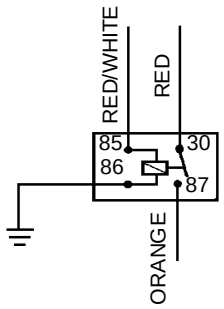

Figure 19

Battery

1. Use a volt-ohm meter to measure the voltage between the battery terminals.

2. If the voltage is less than 12.3 Volts D.C. , the battery should be charged.

NOTE: Regulated voltage will increase to 13.5 Volts when the engine is running.

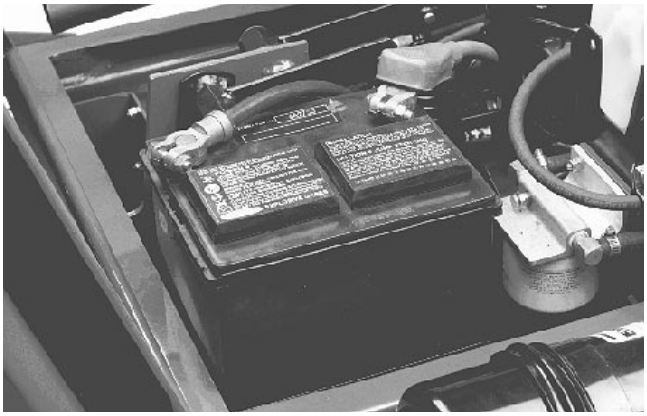

Figure 20

Fuel Stop (ETR) Solenoid

The Reelmaster® 5100-D has an energize-to-run (ETR) fuel stop solenoid. The solenoid will stop injector pump fuel delivery with any electrical failure in the RUN circuit.

1. Disconnect the wire connector and remove the fuel stop solenoid from the engine (Fig. 21).

2. Connect a 12 volt battery so the positive (+) battery terminal is connected to terminals A (hold) and B (pull) (Fig. 22). Connect the negative (–) battery terminal to solenoid terminal C (common). The plunger should retract to the dimension shown.

IMPORTANT: Do not connect Voltage to terminal B (pull) for more than 30 seconds or damage to the solenoid coil could result.

3. With the battery connected the same as step 2, disconnect the battery from solenoid terminal B (pull). The plunger should remain pulled in.

4. Disconnect the battery from terminal A (hold). The plunger should return to the extended position.

5. Check the solenoid internal spring tension. The spring must have 9.2 lbs (4.2 kg) minimum force with the plunger in the extended position.

Replace the fuel stop solenoid if it fails any of the above tests. (See Replacing and/or Adjusting Stop Solenoid in the External Engine Component Repair section of Chapter 3 - Engine.)

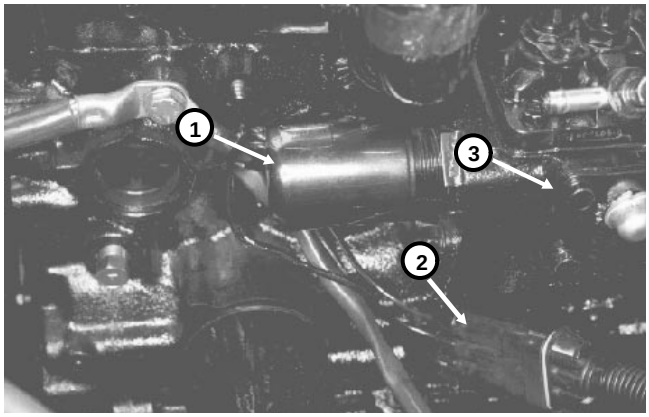

Figure 21

1. Fuel stop (ETR) solenoid
2. Wire connector
3. Governor tie rod cover

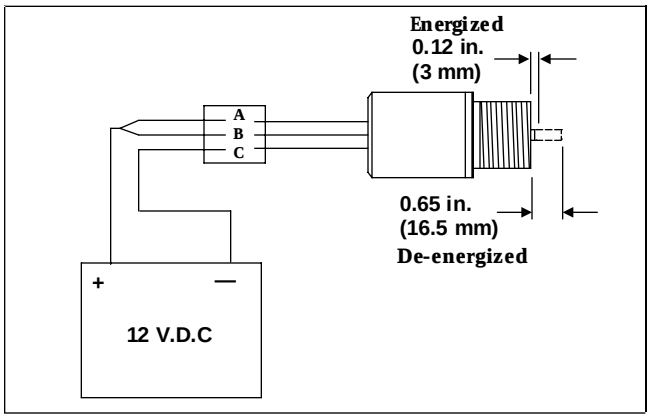

Figure 22

A. Hold
B. Pull
C. Common (ground)

To Test While Connected to Wire Harness

1. Remove the governor tie rod cover so you can observe the solenoid plunger.

2. Hold the manual fuel stop lever back to prevent fuel delivery. Turn the key switch to the START position and quickly return it to the ON position. The solenoid plunger should be retracted.

3. Turn the key switch to the OFF position. The solenoid plunger should extend.

NOTE: You can also test operation without removing the governor tie rod cover. Listen for an audible “click” as the solenoid extends and retracts while doing steps 2 and 3 of the above procedure. This will not show if the solenoid is adjusted correctly or if it is fully extending and retracting. (See Replacing and/or Adjusting the Stop Solenoid in the External Engine Component Repair section of Chapter 3 - Engine.)

Indicator Lights and Gauges

Diagnostic Lamp

The diagnostic lamp should come on when the ignition key switch is turned to the RUN position. If the lamp is ON, it indicates that the electronic control unit (ECU) is functioning normally. If this lamp is OFF, it indicates a lack of power to the ECU, or a disconnected loop-back connector. If this lamp is flashing ON and OFF, it indicates an output fault. If controller diagnostic lamp is flashing, immediately connect the diagnostic display (without turning off the key switch) and push input-output toggle switch on diagnostic display tool so "OUTPUTS DISPLAYED" LED is on. The flashing LED on the diagnostic display will indicate which output is faulted.

Test the lamp by disconnecting the wires and applying 12 V.D.C. between the lamp wiring terminals.

Reel Speed Light

The reel speed light should come ON when the cutting units are operating with the machine not moving. When the light is ON, it indicates that the machine is being operated in a way in which the automatic reel speed control cannot obtain the desired clip.

Test the lamp by disconnecting the wires and applying 12 V.D.C. between the lamp wiring terminals.

Oil Pressure Light

Oil pressure lamp should come on when the ignition key switch is in the RUN position with the engine not running or if the oil pressure switch closes during operation - oil pressure below 7 psi (0.5 kg/cm^2).

Test the lamp by disconnecting the wires and applying 12 V.D.C. between the lamp wiring terminals.

Amp Light

The amp light should come on when the ignition key switch is in the RUN position with the engine not running or if the charging circuit is not operating properly during operation.

Test the lamp by disconnecting the wires and applying 12 V.D.C. between the lamp wiring terminals.

Glow Light

The glow light should be on when the glow switch is ON or the ignition key switch is in the START position.

Test the lamp by disconnecting the wires and applying 12 V.D.C. between the lamp wiring terminals.

Temperature Light

The temperature light should come on only if the high temperature shut-down switch and relay has stopped the engine - coolant temperature above 225° F (108°C).

Test the lamp by grounding the wire that is connected to the high temperature shut-down switch (Fig. 14). The light should come on when the wire is grounded.

Hourmeter

Test the hourmeter by connecting a 12 volt battery so the positive (+) battery terminal is connected to the positive terminal on the hourmeter. Connect the negative (–) battery terminal to the negative (–) terminal on the alternator. The hourmeter should operate as 12 V.D.C. is applied between the terminals.

Temperature Gauge, Fuel Level Gauge and Speedometer

To test a gauge, use a commercial gauge tester. If a commercial gauge tester is not available, substitute a new gauge or test the sending unit.

High Temperature Shut-Down Switch

1. Lower the coolant level in the engine and remove the high temperature shut-down switch (Fig. 23).

2. Put the switch in a container of oil with a thermometer and heat the oil (Fig. 24).

3. The switch is normally open (NO) and should close at 226 - 237° F (108 - 114° C).

CAUTION

Handle hot oil with special care to prevent personal injury or fire.

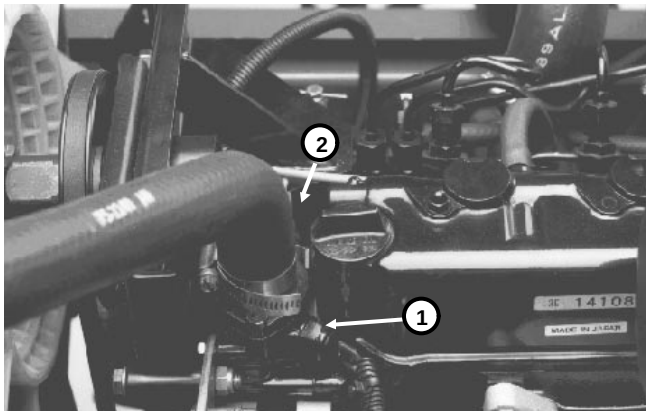

Figure 23

1. High temperature shut-down switch
2. Temperature gauge sender

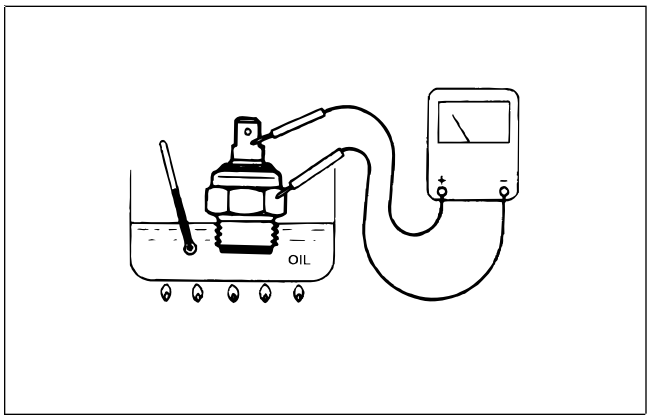

Figure 24

Temperature Gauge Sender

1. Lower the coolant level in the engine and remove the temperature gauge sender (Fig. 23).

2. Put the switch in a container of oil with a thermometer and heat the oil (Fig. 25).

3. With an Ohm meter connected as shown, the following resistance readings should be indicated.

90.5 - 117.5 ohm at 160° F (70° C)
21.3 - 26.3 ohm at 207° F (115° C)

CAUTION

Handle hot oil with special care to prevent personal injury or fire.

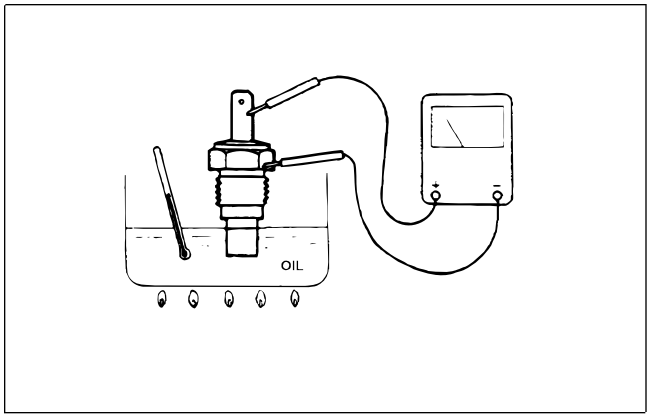

Figure 25

Engine Oil Pressure Switch

The switch is normally closed (NC) and opens with pressure.

The switch opens at approximately 8 psi.

1. Turn ignition key switch ON. Oil pressure lamp should be on.

If bulb is not on:

1. Disconnect wire from switch and touch wire to a good ground.

2. If lamp comes on, replace switch.

3. If lamp does not come on check wiring between lamp and switch for continuity.

If lamp is on with engine running:

1. Shut off engine immediately.

2. Check switch by disconnecting wire. Light should go out.

3. If light is still on, check for short circuit in wiring.

4. Install test gauge in engine oil pressure switch port. Start engine and check for 30 psi minimum at 1500 rpm. If engine pressure is good, replace switch. If engine pressure is low, DO NOT operate the engine.

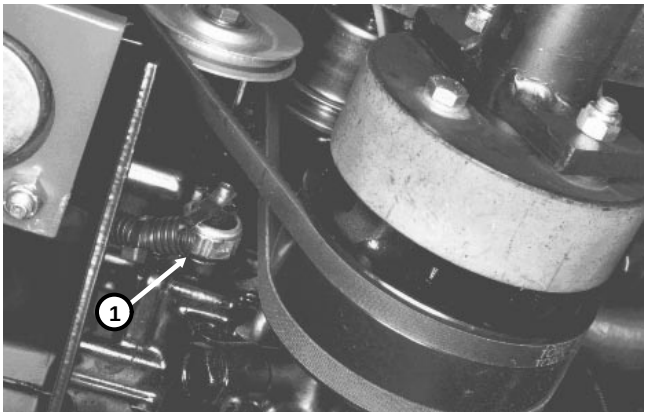

Figure 26

1. Engine oil pressure switch

Fuel Gauge Sender

1. Disconnect wire and remove the fuel gauge sender from the fuel tank.

2. Install an ohm meter between the terminal and base.

3. With arm completely down (empty position), resistance should be 240-260 ohms.

4. With arm completely up (full position), resistance should be 29-34 ohms.

NOTE: Bend float arm, if necessary, to get proper gauge reading for a 1/2 full tank.

CAUTION

Make sure the sending unit is completely dry (no fuel on it) before testing. Perform test away from fuel tank to prevent an explosion or fire from sparks.

Hydraulic Valve Block Solenoids

1. Disconnect the wire connector.

2. Connect a 12 volt battery so the positive (+) battery terminal is connected to colored solenoid lead. Connect the negative (–) battery terminal to black lead. The valve spool should retract completely as 12 V.D.C is applied between leads.

3. If valve spool does not retract check for binding or damage in valve.

4. If valve operates smoothly, but does not retract when 12 V.D.C is applied to solenoid leads, replace solenoid coil.

5. If valve still does not retract after replacing solenoid coil, replace the valve.

NOTE: To to a quick test without removing solenoid valve, hold a screwdriver to top of affected valve. When solenoid is energized, screw driver should be attracted to valve stem, due to magnetism from energized solenoid. This test will not identify a sticking valve spool.

Resistance specifications:

20 Watt solenoid:7.2 Ohms

28 Watt solenoid: 5.1 Ohms

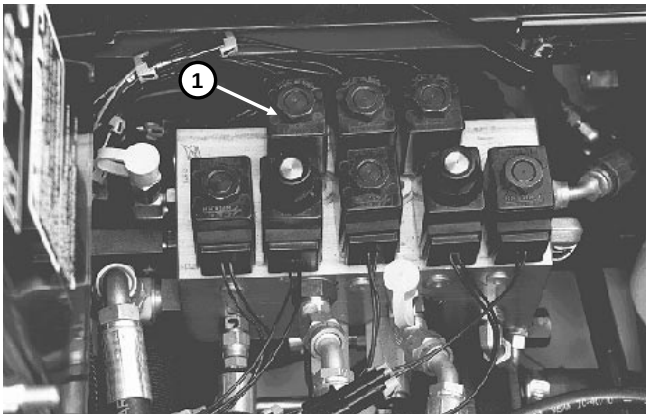

Figure 27

1. Solenoid

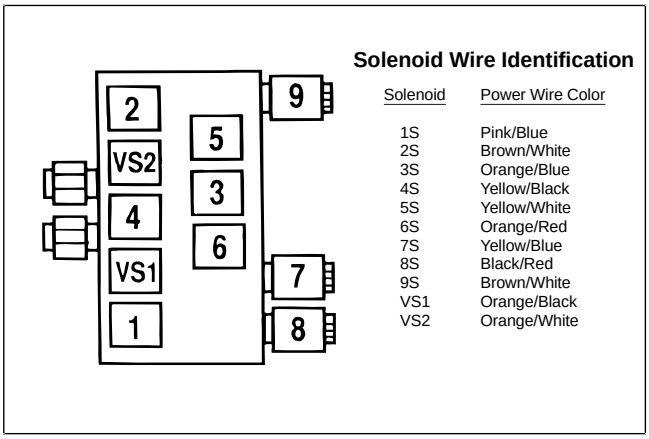

Figure 28

Checking Starter Pinion Gap

1. Install 12 volt battery between the “S” terminal and the starter body (Fig. 29). The pinion should protrude and stop.

IMPORTANT: Never apply battery voltage to the starter for longer than 10 seconds.

2. Lightly push the pinion back and measure the return stroke (called pinion gap).

3. If the pinion gap is not within standard range of 0.5 - 2.0 mm (0.02 - 0.08 in.), adjust it by increasing or decreasing the number of packings on the magnetic switch. The gap is decreased as the number of packings increases.

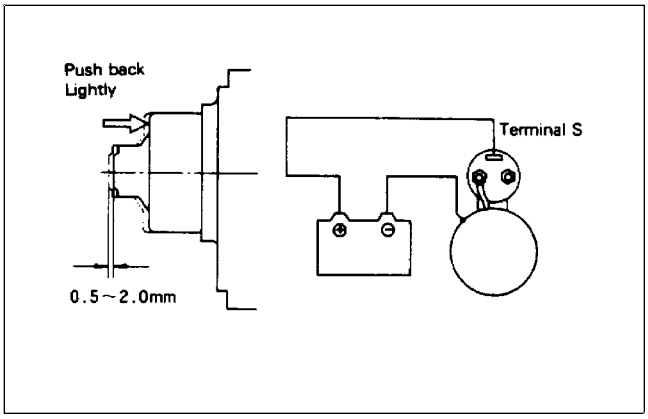

Figure 29

Starter No-Load Test

1. Connect a 12 volt battery, ammeter and voltmeter to the starter as shown (Fig. 30).

2. When terminals “S” and “B” are connected the pinion should protrude and the starter should run smoothly.

Terminal voltage: 11.5V
Current: 100 A
Speed: 3000 rpm

No-Load Test Results

Low speed and high current draw:

- High friction (faulty bearings, bent armature shaft).
- Shorted armature.
- Grounded armature or fields.

Failure to operate with high current draw:

- Direct ground in terminals or fields.
- “Frozen” bearings.

Failure to operate with no current draw:

- Open field circuit.

Low speed and low current draw:

- Open armature coils - check commutator for badly burned bars after disassembly.

High speed and high current draw:

- Poor contact between brushes and commutator (broken brush springs, worn brushes, high insulation between commutator bars).
- High internal resistance (poor connections, damaged leads, dirty commutator or open field circuit).
- Shorted fields.

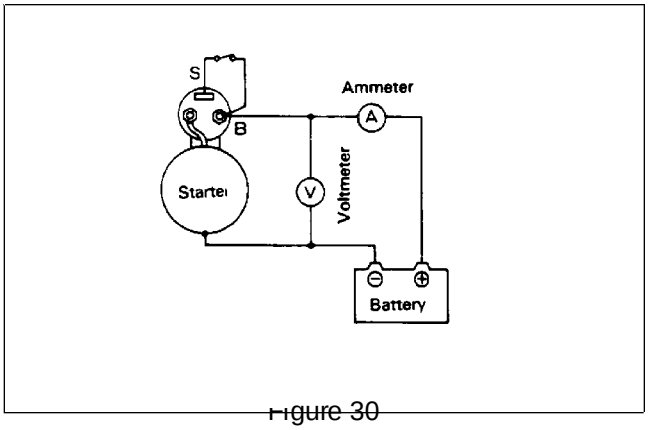

Figure 30

Magnetic Switch (Solenoid) Attraction Test

1. Disconnect the wire from terminal “M” (Fig. 31).

2. Connect a 12 volt battery to the magnetic switch terminals “S” and “M”. The pinion must protrude.

IMPORTANT: Never apply battery voltage to the starter for longer than 10 seconds.

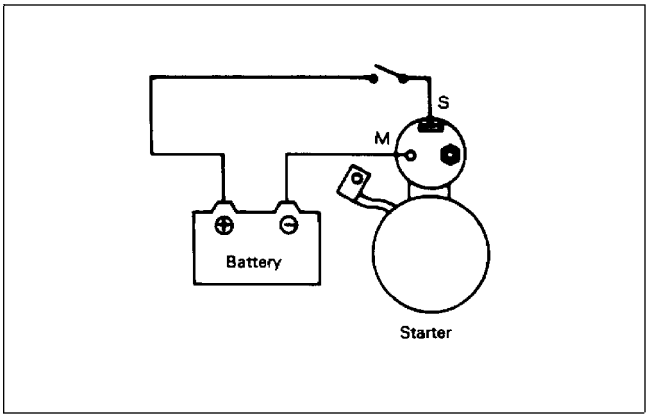

Figure 31

Magnetic Switch (Solenoid) Holding Test

1. Disconnect the wire from terminal “M” (Fig. 32).

2. Connect a 12 volt battery to the magnetic switch terminal “S” and the starter body. Pull out the pinion fully. The pinion must remain at that position even when released.

IMPORTANT: Never apply battery voltage to the starter for longer than 10 seconds.

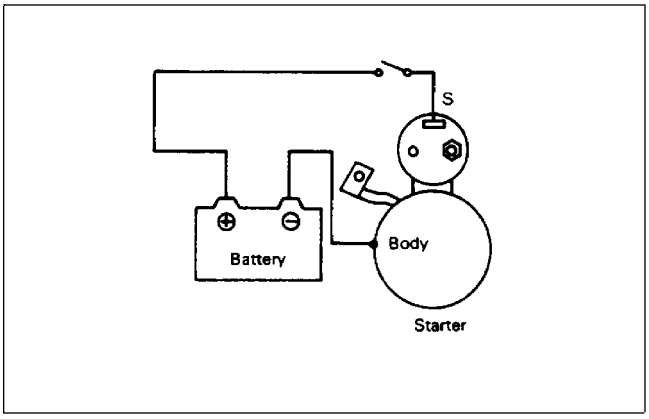

Figure 32

Magnetic Switch (Solenoid) Return Test

1. Disconnect the wire from terminal “M” (Fig. 33).

2. Connect a 12 volt battery to the magnetic switch terminal “M” and the starter body. Pull out the pinion fully. The pinion must return to its original position when released.

IMPORTANT: Never apply battery voltage to the starter for longer than 10 seconds.

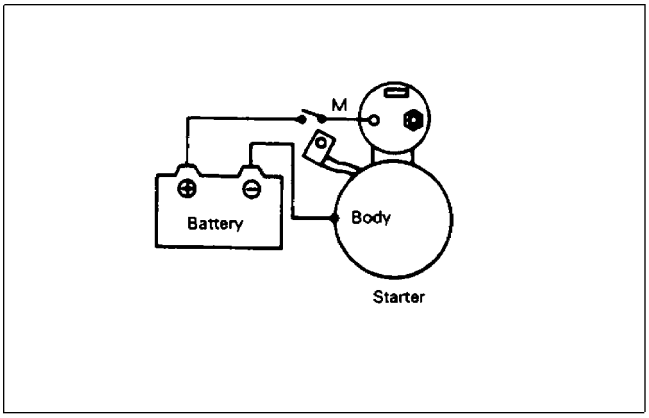

Figure 33

Alternator Regulated Voltage Test

1. Install an ammeter between the positive (+) terminal of the battery and terminal “B” of the alternator (Fig. 34).

2. Ground alternator terminal “L” through a voltmeter.

3. Note that the voltmeter shows 0 volts when the ignition key switch is in the OFF position. The voltmeter will show voltage lower than battery voltage when the ignition key switch is in the ON position (engine not running).

4. Start the engine.

5. Run the engine with the alternator at 1300 and 2500 rpm and observe the voltmeter with all accessories OFF, Ammeter below 5 A. Regulated voltage will decrease slightly as alternator temperature increases.

Regulated voltage: 13.5 V

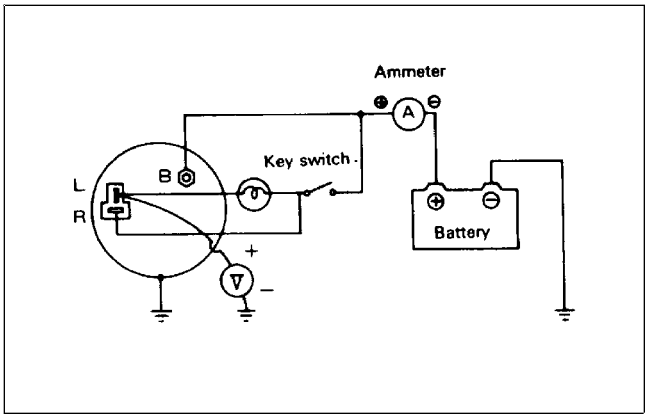

Figure 34

Alternator Output Test

1. Disconnect the battery ground (–) cable.

2. Install an ammeter between the positive (+) terminal of the battery and terminal “B” of the alternator (Fig. 35).

3. Ground alternator terminal “B” through a voltmeter.

4. Connect the battery ground (–) cable.

5. Start the engine.

6. Run the engine with the alternator at 2500 and 5000 rpm and observe the voltmeter with all electrical load applied. Read the maximum indication on the ammeter with the voltmeter showing 13.5 V.

Output Characteristics (Hot):

21 A at 2500 rpm
37 A at 5000 rpm

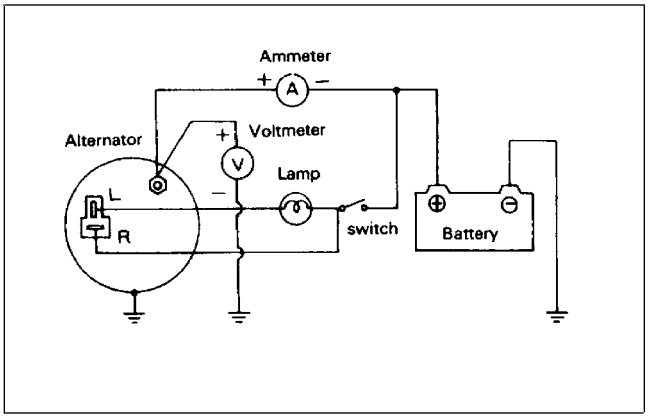

Figure 35

Repairs

IMPORTANT: Before welding on the machine, disconnect both battery cables from the battery, disconnect both wire harness plugs from the electronic control unit and disconnect the terminal connector from the alternator to prevent damage to the electrical system.

Battery Service

IMPORTANT: To prevent damage to the electrical components, do not operate the engine with the battery cables disconnected.

Keep the terminals and entire battery case clean. To clean the battery, wash the entire case with a solution of baking soda and water. Rinse with clear water. Do not get the soda solution into the battery because damage to the battery will result. Coat the battery posts and cable connectors with skin-over grease, or petroleum jelly to prevent corrosion.

Check for loose battery hold-downs. A loose battery may crack or cause the container to wear and leak acid.

Check the electrolyte solution to make sure the level is above the plates (Fig. 37). If the level is low (but above the plates inside the battery), add water so the level is to the bottom of the cap tubes. If the level is below the plates, add water only until the plates are covered and then charge the battery. After charging, fill the battery to the proper level.

CAUTION

Do not charge a frozen battery because it can explode and cause injury. Let the battery warm to 60° F (15.5° C) before connecting to a charger.

Charge the battery in a well-ventilated place so that gases produced while charging can dissipate. Since the gases are explosive, keep open flame and electrical spark away from the battery; do not smoke. Nausea may result if the gases are inhaled. Unplug the charger from the electrical outlet before connecting or disconnecting the charger leads from the battery posts.

Electrolyte Specific Gravity

Fully charged: 1.250 - 1.280
Discharged: less than 1.240

Battery Specifications

BCI Group 26 SMF–5 Battery:
530 Amp Cranking Performance at 0° F (–17 ° C)
85 min. Reserve Capacity at 80° F (27 ° C)

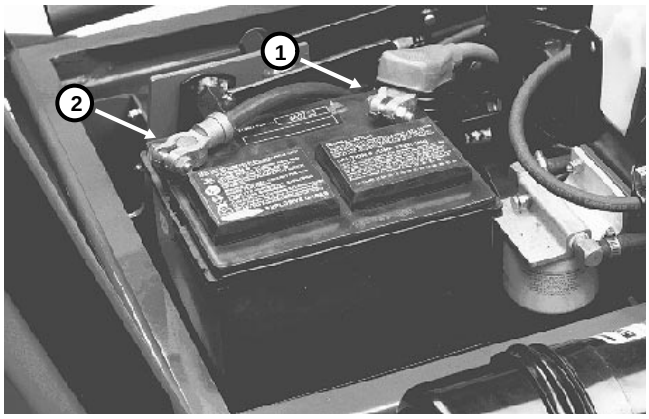

Figure 36

1. Positive (+) terminal
2. Negative (–) terminal

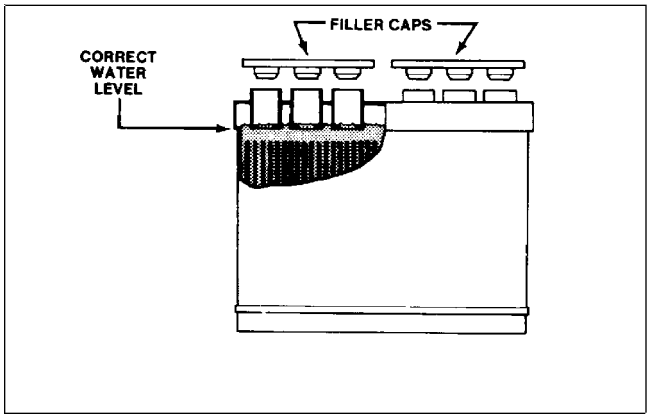

Figure 37

Fuses

The electrical system is protected by fuses located under the control panel to the operator's right (Fig. 38).

NOTE: It is not always possible to see if a fuse is faulty. It is recommended that you check for faulty fuses with a continutiy tester, not visually.

The electrical system is also equipped with thermal circuit breakers. The thermal circuit breakers automatically reset when allowed to cool.

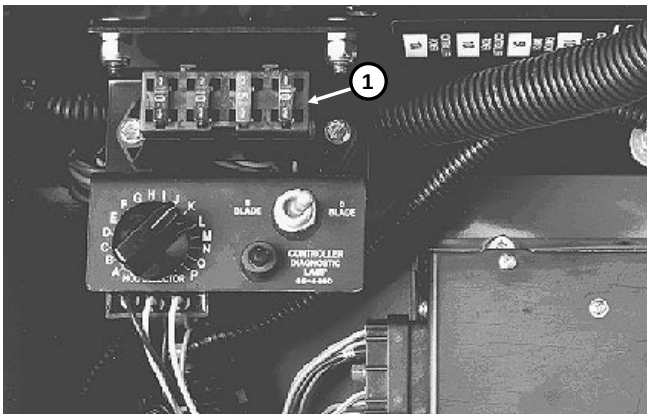

Figure 38

1. Fuses

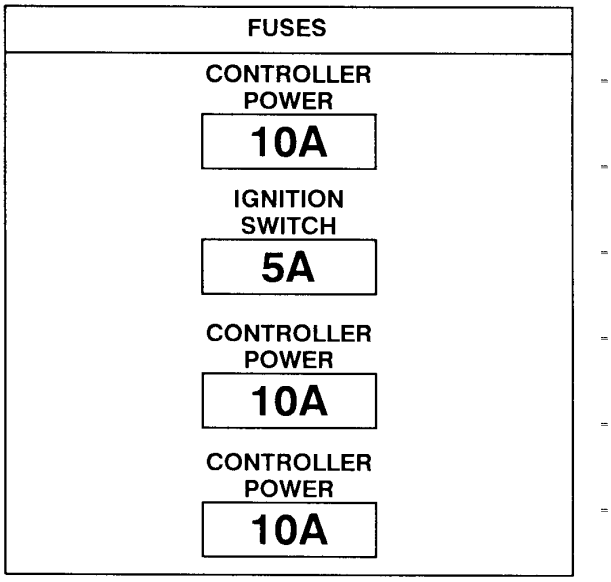

Figure 39a
(S/N Below 51001)

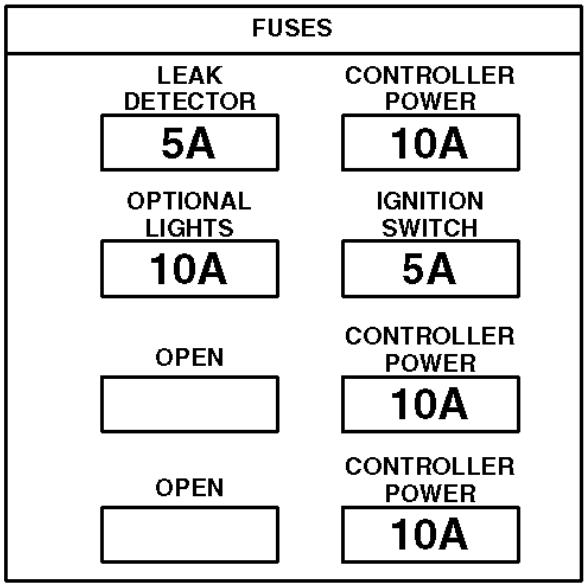

Figure 39b
(S/N 51001 - 59999)

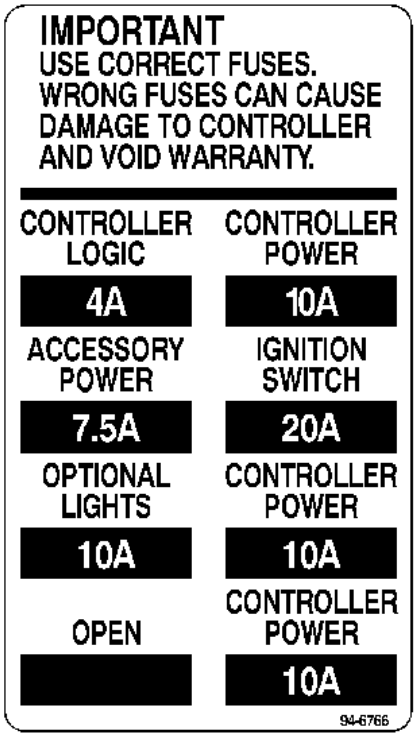

Figure 39c
(S/N 60001 & Up)

Traction (Neutral) Switch Replacement

1. Remove the two wires that are connected to the traction switch (Fig. 39).

2. Have a helper push the traction pedal down into either the FORWARD or REVERSE position; this will take the switch arm tension off of the switch. Loosen two (2) screws and remove the switch.

3. Install new switch. DO NOT over-tighten screws as the switch case could break.

NOTE: Have a helper hold the traction pedal down while installing the switch.

4. Reconnect the two wires to the new switch. Make sure that one wire is connected to the “COMMON” terminal, and one wire is connected to the “NORMALLY OPEN” (NO) terminal.

IMPORTANT: The traction switch has three (3) terminals. If the two (2) wires are not connected to the “COMMON” and “NORMALLY OPEN” (NO) terminals, the engine will be unable to start and the safety interlock circuit will not function properly.

CAUTION

If the wires are not correctly installed to the switch, the engine could start with the traction pedal in forward or reverse.

5. Coat the switch terminals and wires with skin-over grease.

6. Check traction control neutral adjustment. (See Traction Control Neutral Adjustment in the Adjustments section of Chapter 4 - HYDRAULIC SYSTEM.

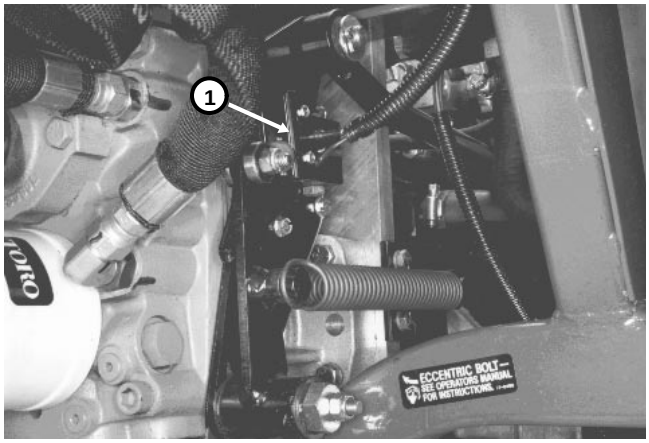

Figure 39

1. Traction (neutral) switch

Electronic Control Unit (ECU) Replacement

IMPORTANT: Before welding on the machine, disconnect both battery cables from the battery, disconnect both wire harness connectors from the ECU and disconnect the terminal connector from the alternator to prevent damage to the electrical system.

1. Stop the engine.

2. Remove nuts securing ECU to frame.

3. Loosen nuts on wiring connectors with a 1/4" nut driver, then disconnect wiring connectors from ECU (Fig. 40).

4. Remove ECU.

5. To install ECU, connect wiring connectors to ECU, then tighten nuts on wiring connectors. Secure ECU to frame with nuts removed in step 2.

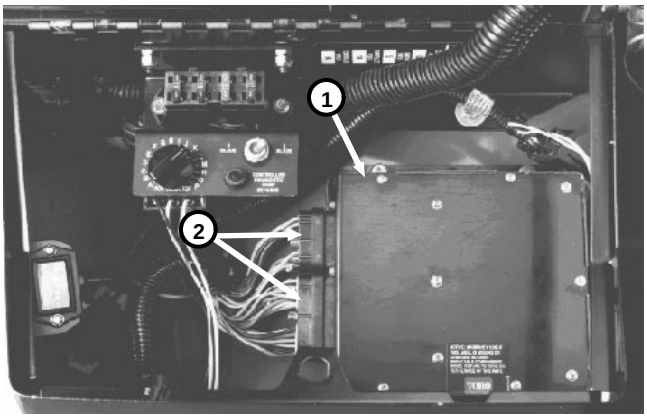

Figure 40

1. Electronic control unit (ECU)
2. Wiring connectors

Solenoid Valve Coil Replacement

1. Park machine on a level surface, engage parking brake, lower the cutting units and turn engine OFF.

2. Disconnect solenoid electrical connector.

3. Remove nut from solenoid.

4. Remove solenoid coil.

5. Install new solenoid coil and secure with nut. Apply “Locktite 242" or equivalent to threads on end of stem tube before installing nut. Tighten nut to a torque of 15 in-lb. Over-tightening may damage the solenoid or cause the solenoid valve to malfunction.

6. Connect electrical wiring connector.

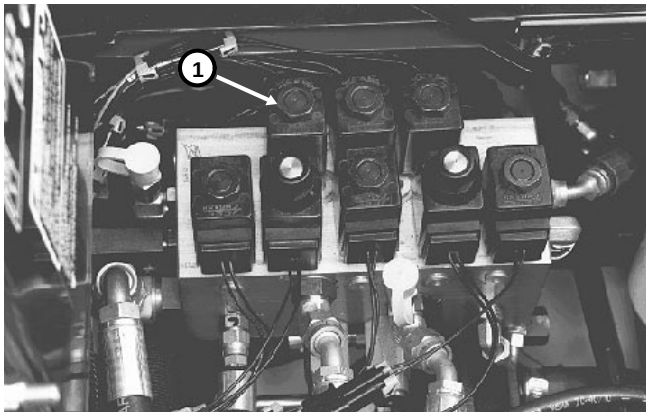

Figure 41

1. Solenoid

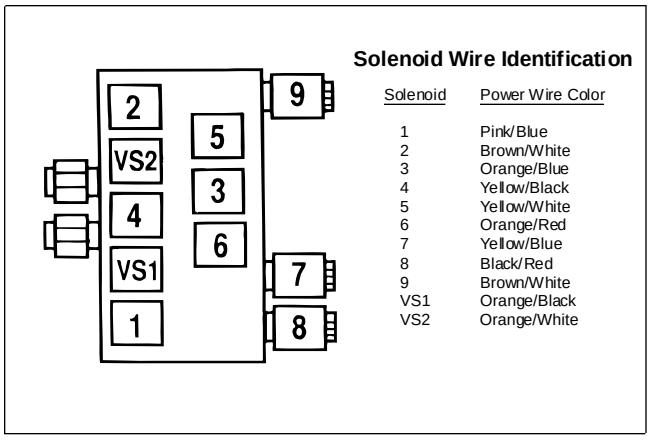

Figure 42

Starter Service

Disassembly and Inspection

1. Remove the starter from the engine (see Starter Removal and Installation in the External Engine Component Repair section of Chapter 4 - Mitsubishi Diesel Engine).

2. Disconnect wire from magnetic switch terminal “M”.

3. Loose two screws securing the magnetic switch (Fig. 44). Remove the magnetic switch.

4. Remove two through bolts and screws securing the brush holder. Remove the rear bracket.

5. With the two brushes in the floating state, remove the yoke and brush holder assembly. Pull the armature out.

6. Remove the cover, pry the snap ring out and remove the washer.

7. Unscrew the bolts and remove the center bracket. As the bracket is removed, washers for pinion shaft end play adjustment will come off.

8. Pull out the reduction gear lever and lever spring from the front bracket.

9. Pry the snap ring out on the pinion side and pull out the pinion and pinion shaft.

10. Remove the ball bearings from each end of the armature with a bearing puller. The bearing that is press-fitted in the front bracket cannot be removed. Replace the bracket assembly if the bearing is worn or damaged.

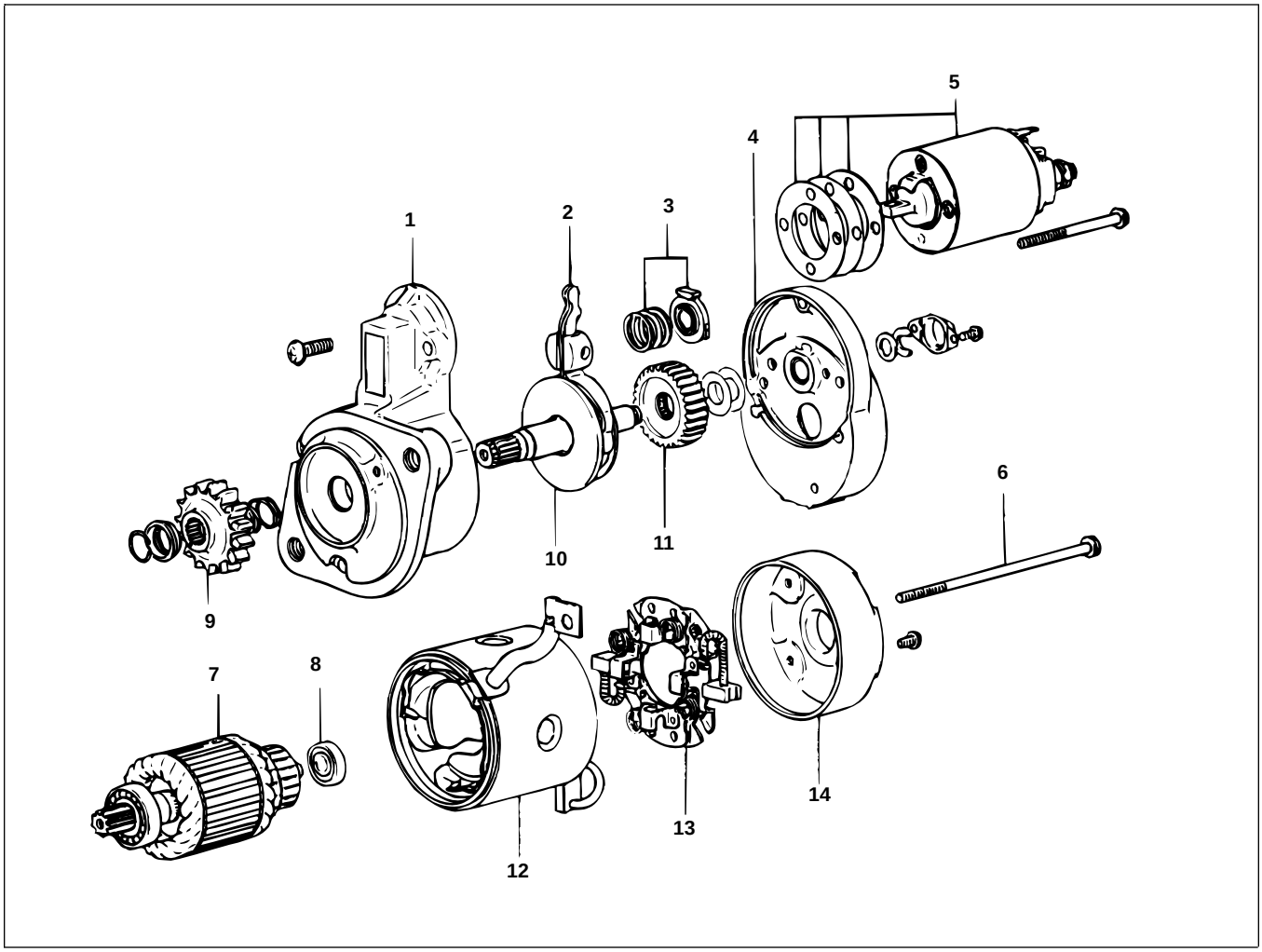

Figure 44

1. Front bracket assembly
2. Lever assembly
3. Spring set
4. Center bracket assembly
5. Switch assembly
6. Through bolt
7. Armature
8. Rear bearing
9. Pinion
10. Pinion shaft assembly
11. Gear
12. Yoke assembly
13. Brush holder assembly
14. Rear bracket

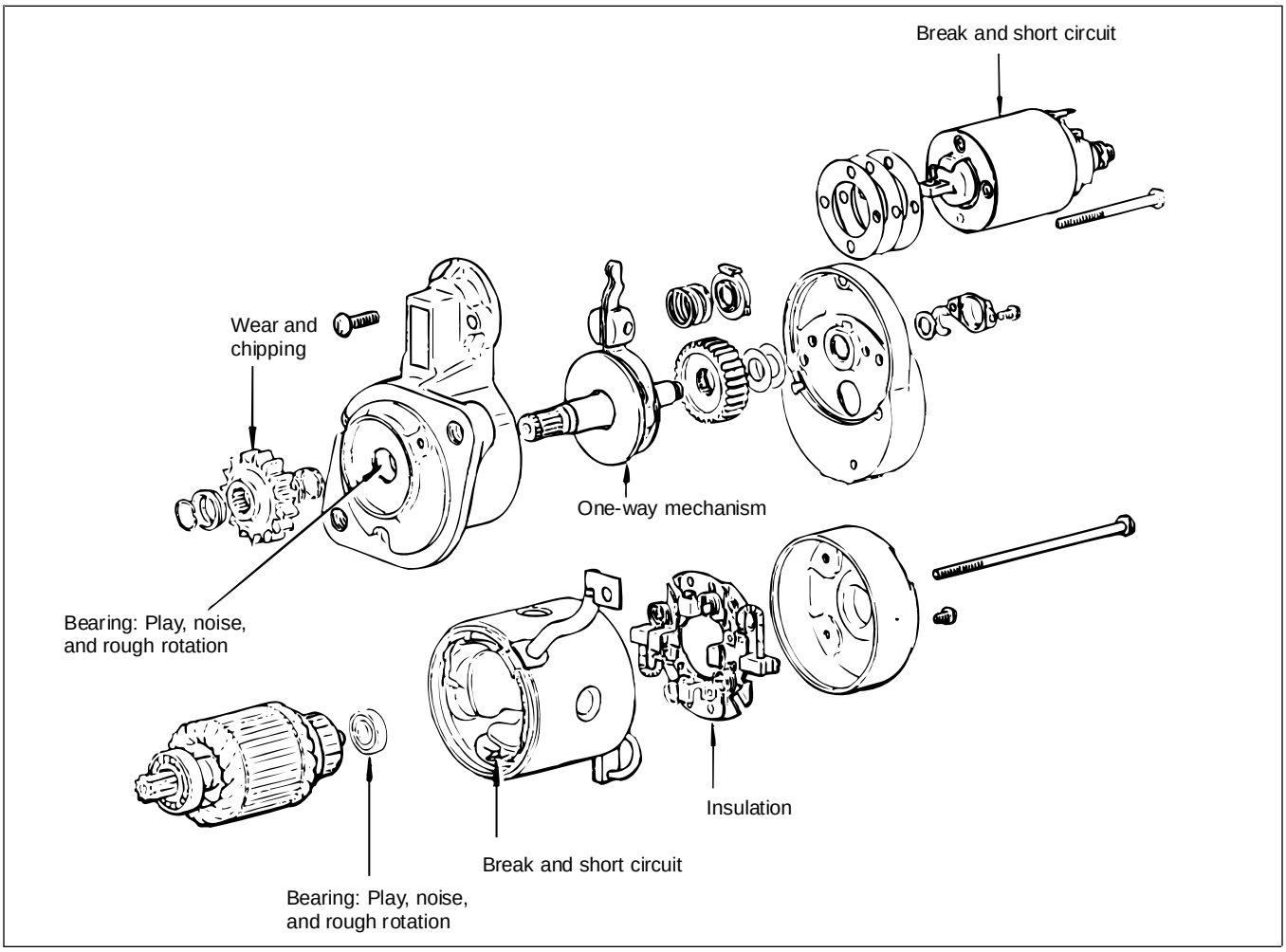

Figure 45

10. Check the magnetic switch for continuity between terminals “S” and “M” and between terminals “S” and body (Fig. 46). If there is continuity (or zero ohm is indicated), replace the magnetic switch.

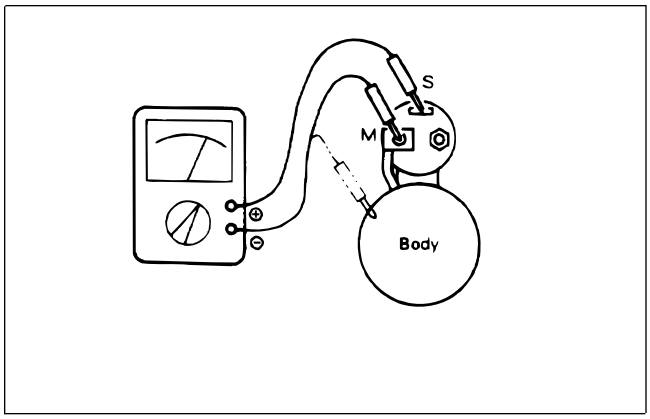

Figure 46

11. Put the armature on a growler tester to check for a shorted armature (Fig. 47). A burned commutator bar is an indication of a shorted armature. With the growler turned on, put a thin strip of steel or a hacksaw blade on the armature as it is slowly rotated. If the metal strip vibrates over a winding, that winding is short circuited. Short circuited windings are sometimes caused by metal in the commutator bridging the gap from on commutator bar to the next. By removing the bridged metal, this condition can be corrected. If this does not correct the short replace the armature.

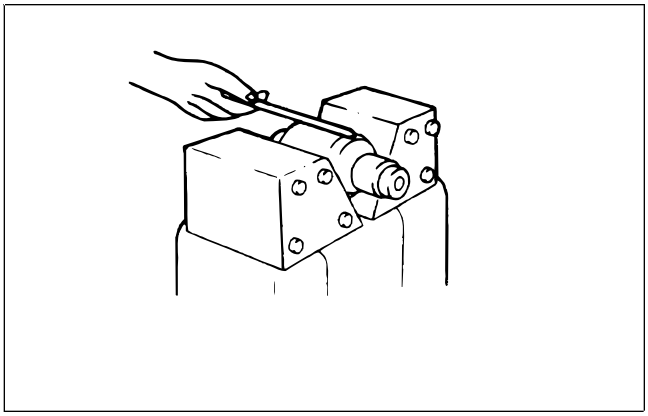

Figure 47

12. Measure the commutator O.D. and depth of undercut. Repair or replace if the service limit is exceeded. Check the commutator outside surface for dirt and roughness. If rough, polish the commutator with fine (00 or 000) sandpaper. DO NOT use emery cloth.

Item	Standard	Service Limit
Commutator O.D.	38.7 mm (1.52 in.)	– 1.0 mm (– 0.4 in.)
Depth of Undercut	0.5 mm (0.02 in.)	0.2 mm (0.008 in.)

13. Check the brushes (Fig. 48). Replace if worn beyond the service limit. Check the brush spring tension. Replace the springs if tension is less than the service limit. Check for insulation between the positive brush holder and holder base. If poorly insulated, replace the holder assembly. Check the brush holders for proper staking.

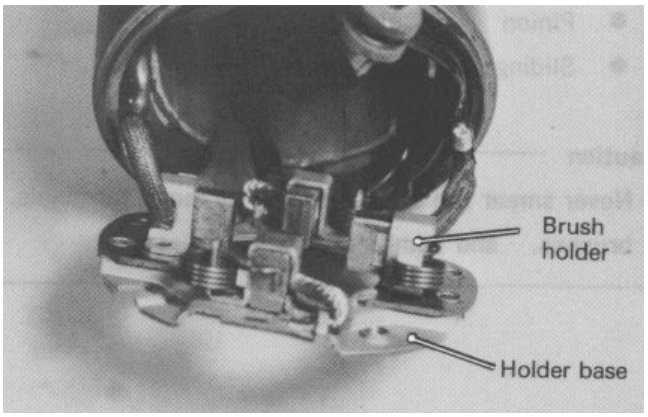

Figure 48

Item	Standard	Service Limit
Height of Brush	17 mm (0.67 in.)	6 mm (0.24 in.)
Spring Pressure	3 kg (6.6 lb.)	

14. Check for continuity between one end of field coil (brush) and yoke (Fig. 49). There should be no continuity. Check for continuity between both ends of coil (brushes). There should be continuity if the field coil is good. Check the poles and coil for tightness.

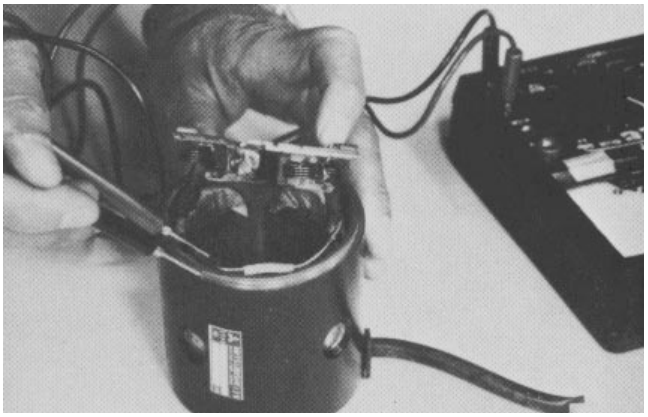

Figure 49

Assembly and Adjustment of Starter

1. Reverse steps 1 - 10 under Disassembly and Inspection and also following the following instructions:

2. Set the pinion shaft end play (thrust gap) to 0.5 mm (0.02 in.) or less by inserting an adjusting washer between the center bracket and reduction gear (Fig. 50).

A. Fit the pinion shaft, reduction gear washer and snap ring to the center bracket.

B. Measure end play by moving the pinion shaft in and out. If end play exceeds 0.5 mm (0.02 in.), increase the number of adjusting washers.

3. Put grease on the following parts whenever the starter has been overhauled:

Armature shaft gear and reduction gear
All bearings
Bearing shaft washers and snap rings
Bearing sleeves
Pinion
Sliding part of lever

IMPORTANT: Never put grease on terminals, brushes, commutator or surface that mounts to the engine.

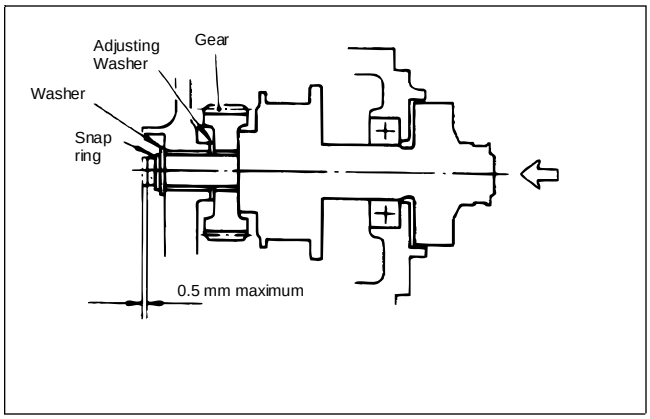

Figure 50

Alternator Service

Disassembly and Inspection

1. Remove the alternator from the engine (see Alternator Removal and Installation in the External Engine Component Repair section of Chapter 4 - Mitsubishi Diesel Engine).

2. Remove the three through bolts (Fig. 51).

3. Use a solder iron to heat the rear bracket around the rear bearing to 120 - 140° F (50 - 60° C). Separate the front and rear brackets by prying with a screwdriver blade inserted between the brackets.

IMPORTANT: Be careful not to insert the blade too far causing damage to the windings.

4. Put the rotor in a vise. Remove pulley nut and pull off the pulley and spacer.

5. Pull the rotor assembly from the front bracket.

6. Unsolder the stator core lead wires. Remove the stator assembly.

IMPORTANT: To prevent damage to the diodes, heat the stator core lead wires only long enough to remove.

7. Disconnect the capacitor from terminal “B”.

8. Loosen the screws securing the rectifier and remove the rectifier.

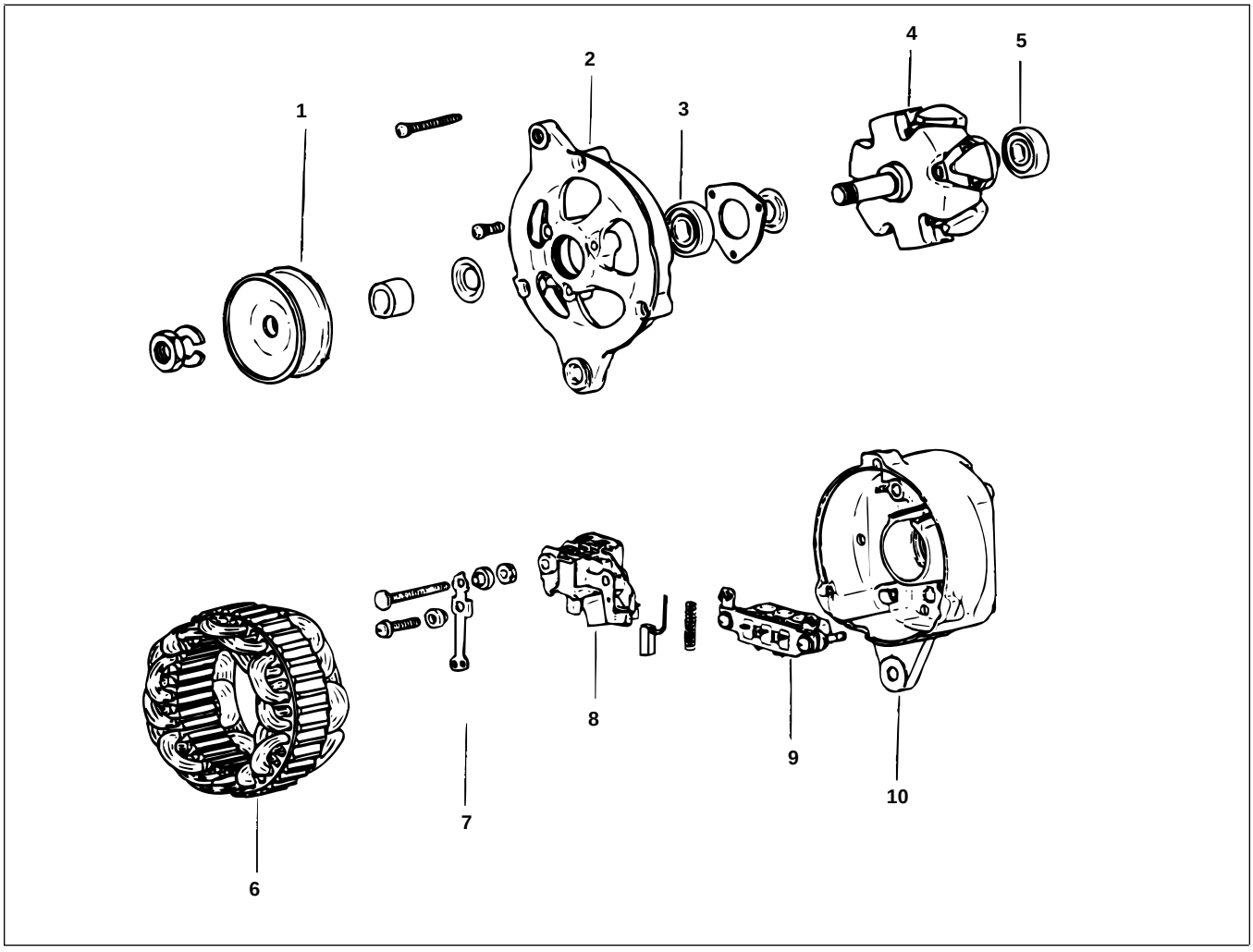

Figure 51

1. Pulley
2. Front bracket assembly
3. Front bearing
4. Rotor assembly
5. Rear bearing
6. Stator
7. Terminal set assembly
8. Regulator assembly
9. Rectifier assembly
10. Rear bracket assembly

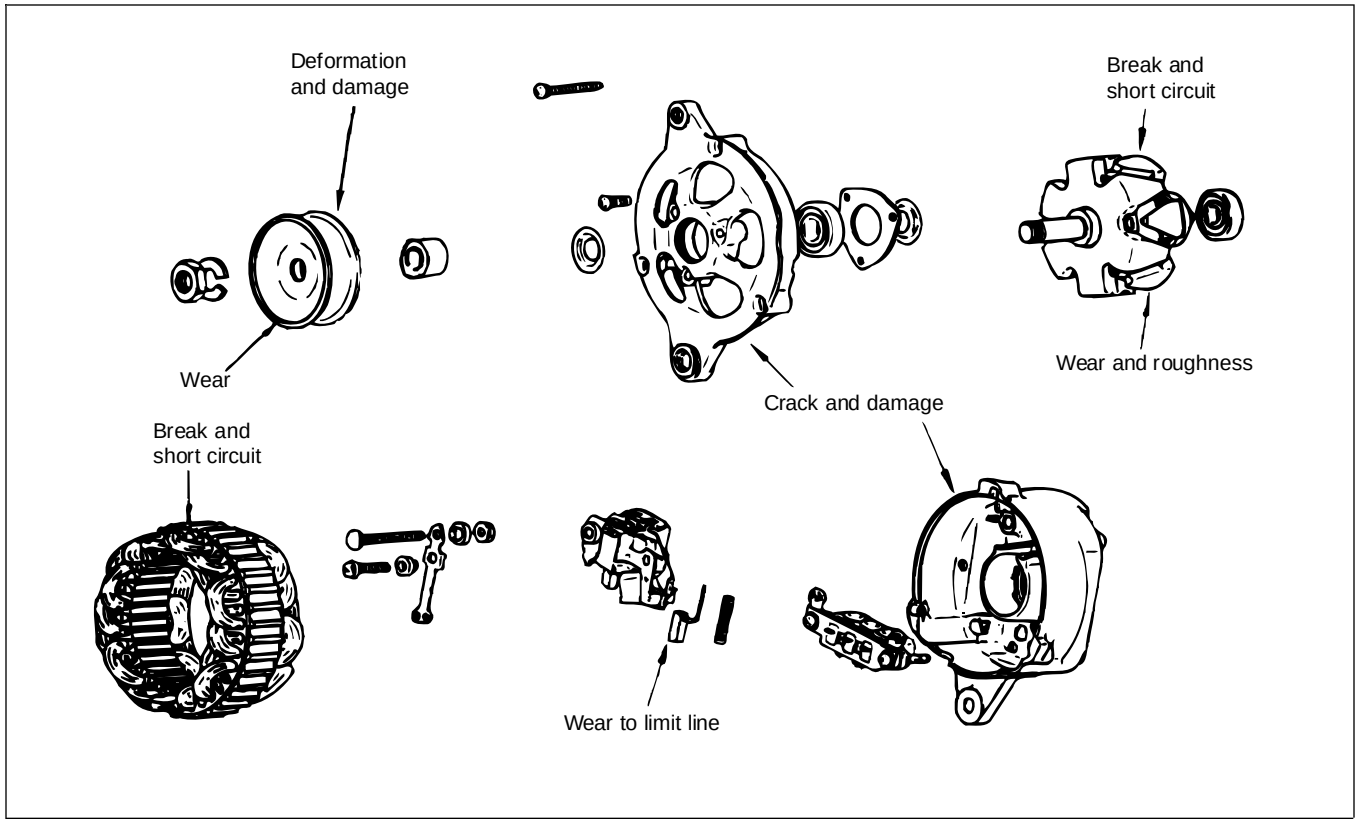

Figure 52

9. Check each diode in the rectifier for conduction (Fig. 53). Connect an ohm meter across the lead wire and diode case. The diode is normal if its resistance is large in one direction and small in the reverse direction. If there is equal resistance in both directions the diode is damaged. Replace the rectifier assembly if a diode is damaged.

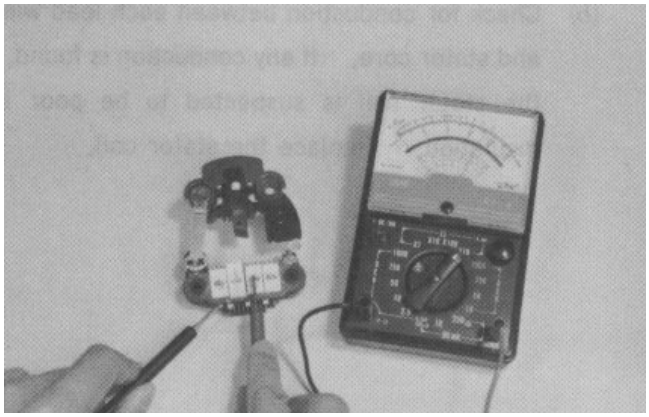

Figure 53

10. Check the field coil for continuity between the slip rings (Fig. 54). If there is no continuity, replace the field coil.

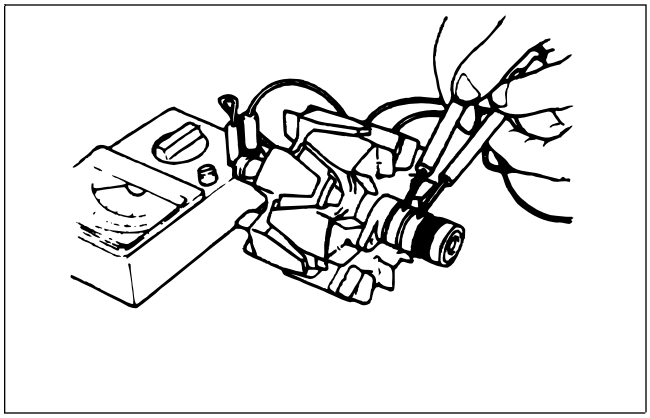

Figure 54

11. Check for continuity between a slip ring and shaft (core) (Fig. 55). Replace the field coil if there is continuity.

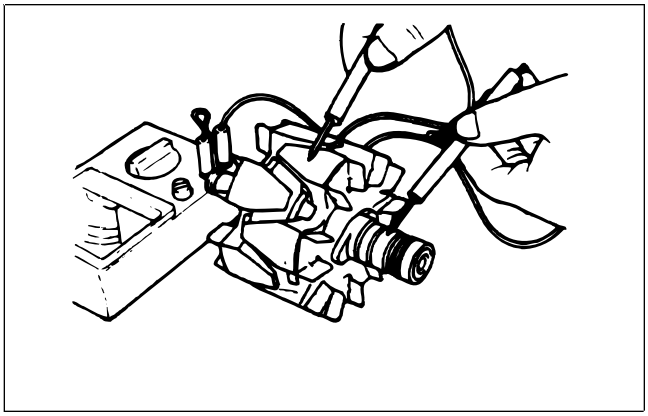

Figure 55

12. Check for continuity between lead wires of the stator coil (Fig. 56). Replace the stator coil if there is no continuity.

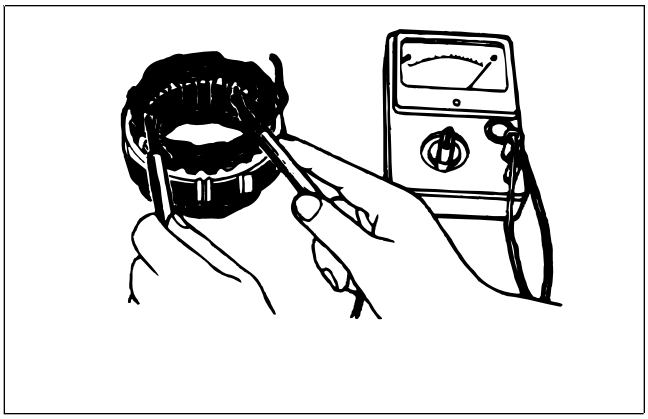

Figure 56

13. Check for continuity between each lead wire and stator core (Fig. 57). Replace the stator coil if there is continuity.

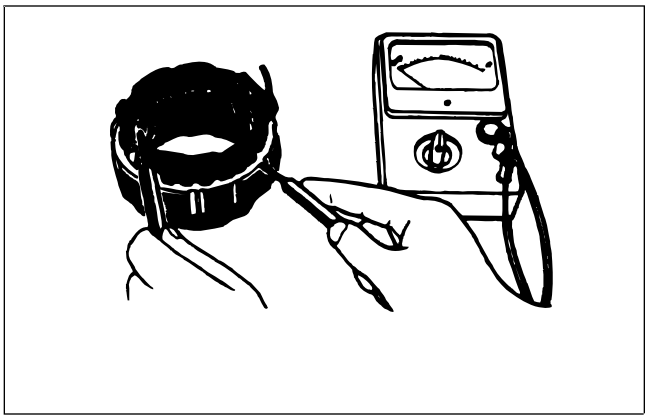

Figure 57

Assembly of Alternator

1. Reverse steps 1 - 8 under Disassembly and Inspection and also following the following instructions:

2. The rear bearing has an eccentric groove. Install the snap ring so its projection fits in the deepest part of the groove.

3. When installing a new rear bearing, press fit the bearing with its groove facing the slip ring side.

4. Heat the rear bracket when press fitting the rear bearing into the bracket.

IMPORTANT: Put a wire through the small hole in the rear bracket to lift the brushes before installing the rotor to the rear bracket (Fig. 58). Remove the wire after the rotor is installed.

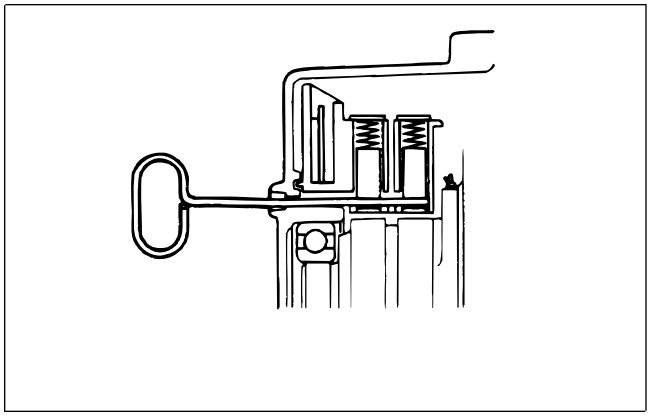

Figure 58

Speedometer Sensor Installation

To install speedometer sensor:

1. If axle cover plate was not removed, go to step 9.

2. Lubricate and install O-ring into plate.

3. Apply silicone sealant to face of plate where it will contact cover.

4. Install plate to inside face of cover, then install capscrew and lockwasher through cover into plate.

5. Install machine screw throught plate and cover, then install locknut to machine screw.

6. Tighten capscrew and locknut to secure plate to cover.

7. Install jam nut onto long machine screw until near lock nut.

8. Install plate and cover assembly to axle assembly using silicone sealant to seal cover to axle, then install eight (8) screws to secure cover.

9. Lubricate and install O-ring if not done in step 2 above.

10. Insert sensor into hole in cover with hole in sensor going over long machine screw, and push sensor in until it contacts axle gear.

11. Thread jam nut out until is contacts sensor. Turn jam nut one more turn out from this point (this pulls sensor out slightly).

12. Install other locknut to machine screw and tighten to secure sensor in position.

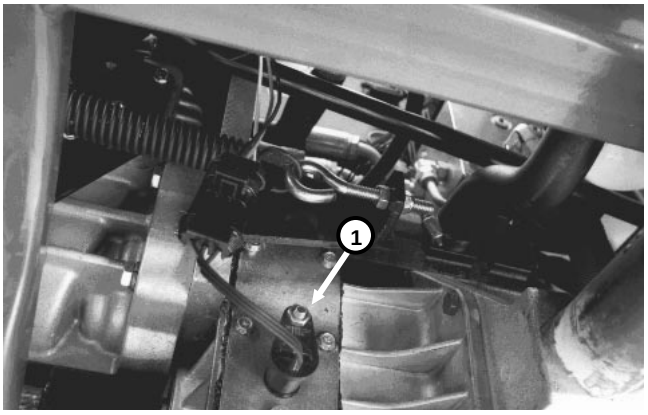

Figure 59A

1. Speedmeter sensor

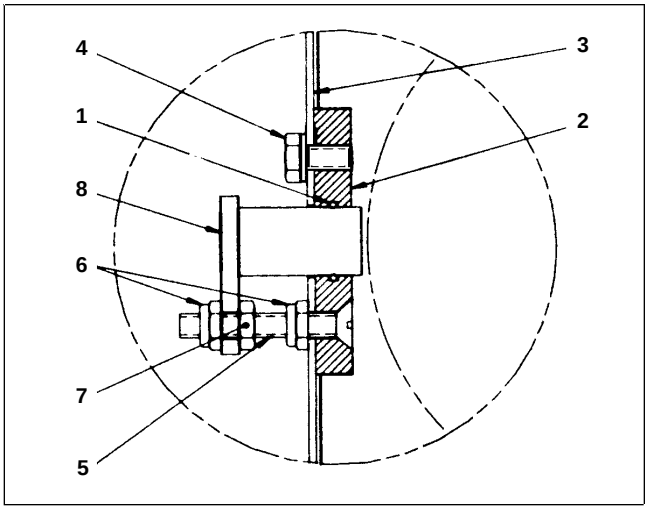

Figure 59B

1. O-ring	**5. Machine screw**
2. Plate	**6. Locknut (2)**
3. Cover	**7. Jam nut**
4. Capscrew & lockwasher	**8. Sensor**

Reel Speed Sensor Installation

Reel speed sensors are located on the left front and left rear cutting units.

1. Thread reel speed sensor into sensor holder until dimension shown in Figure 60 is attained. Lock adjustment with two (2) jam nuts.

2. Align mounting holes and insert sensor and holder into hole in top of counterweight.

3. Secure sensor holder to counterweight with 1/4-20 x 3/4" capscrew.

4. Install magnet on end of reel shaft through opening in end of counterweight with a 3/8-16 x 1" capscrew. Install magnet so counterbore faces towards end of reel shaft and smooth side faces out. Tighten capscrew securing magnet to a maximum torque of 5 ft-lb.

IMPORTANT: Over tightening capscrew securing magnet will damage magnet and cause sensor to malfunction.

5. Install cap plug into end of counterweight.

6. Route front sensor wire across carrier frame cross tube, up the pull arm and connect to wiring harness above front cutting unit lift cylinders.

7. Route rear sensor wire across carrier frame cross tube, up the pull arm and connect to wiring harness connector near engine fuel stop (ETR) solenoid.

8. Use cable ties to secure sensor wires to carrier frame cross tubes and hydraulic hoses.

IMPORTANT: Make sure sensor wires do not hang where they could come in contact with hot or moving parts or interfere with operator getting on or off machine.

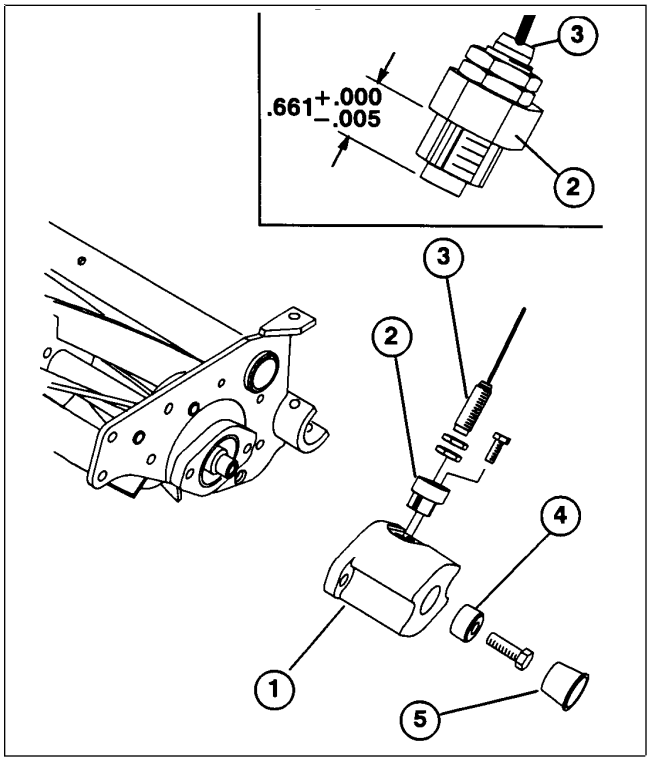

Figure 60

1. Counterweight
2. Sensor holder
3. Sensor
4. Magnet
5. Cap plug

Reel Speed Sensor Installation

Reel speed sensors are located on the left front and left rear cutting units.

1. Install magnet on end of reel shaft through opening in end of counterweight. Install magnet so counterbore faces towards end of reel shaft and smooth side faces out. Tighten capscrew securing magnet to a maximum torque of 5 ft-lb.

IMPORTANT: Over tightening capscrew securing magnet will damage magnet and cause sensor to malfunction.

2. Install cap plug into end of counterweight.

3. Thread reel speed sensor into hole in counterweight until light contact is made with magnet, then back sensor out one (1) turn. Tighten jam nut to hold sensor in position.

4. Route front sensor wire across carrier frame cross tube, up the pull arm and connect to wiring harness above front cutting unit lift cylinders.

5. Route rear sensor wire across carrier frame cross tube, up the pull arm and connect to wiring harness connector near engine fuel stop (ETR) solenoid.

5. Use cable ties to secure sensor wires to carrier frame cross tubes and hydraulic hoses.

IMPORTANT: Make sure sensor wires do not hang where they could come in contact with hot or moving parts or interfere with operator getting on or off machine.

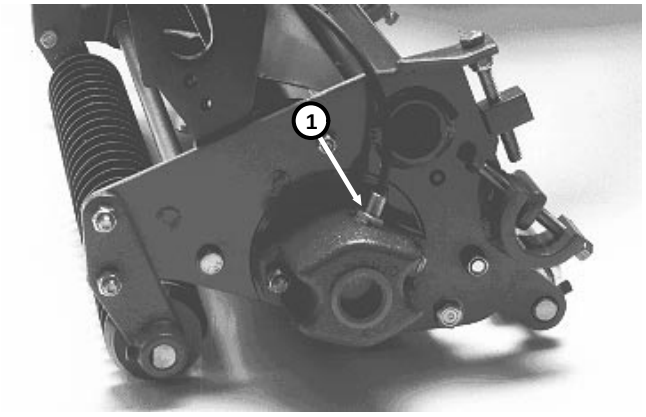

Figure 61

1. Reel speed sensor

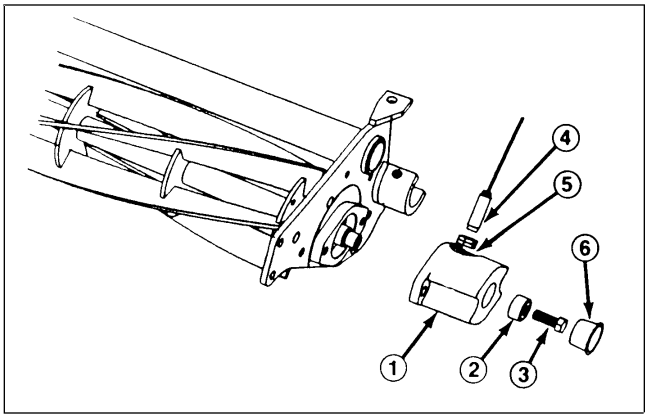

Figure 62

1. Counterweight
2. Magnet
3. Capscrew
4. Sensor
5. Jam nut
6. Cap plug

Chapter 6

Differential Axle

Table of Contents

INTRODUCTION 1
TORQUE SPECIFICATIONS 2
SPECIAL TOOLS 2
REPAIRS 3
Axle Removal and Installation 3
Axle Shaft Disassembly and Wheel Bearing Service 4
Differential and Housing Disassembly 8
Differential and Housing Reassembly 14

Introduction

The Reelmaster® 223-D and 5100-D uses a Dana Hydrostatic Axle, model GT-20. The differential and axle form the final drive of the power train (Fig. 1).

The differential has a heavy duty case with automotive type, cut gears that rotate on tapered roller bearings. Single-row, pre-set, tapered roller bearings are used on the outside ends of the axle shafts.

The entire drive line of the axle assembly is made of alloy steel. The axle has a die-cast aluminum housing that also serves as the hydraulic oil reservoir.

Power is transmitted from the transmission output gear to the pinion spur gear. The pinion spur gear transmits power directly to the differential drive gears, to turn the axles and the wheels.

The differential axle has a one-piece axle shaft with the flange being part of the axle stem (Fig. 1A).

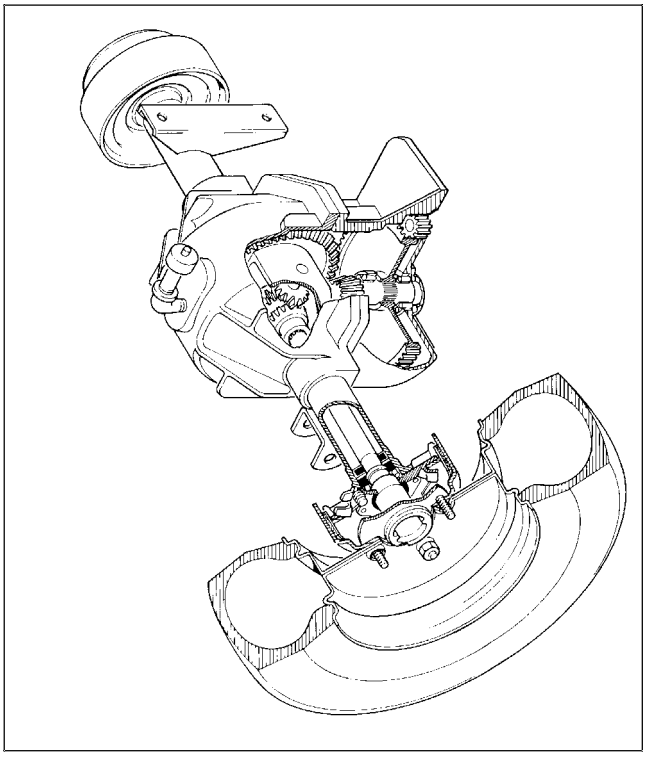

Figure 1

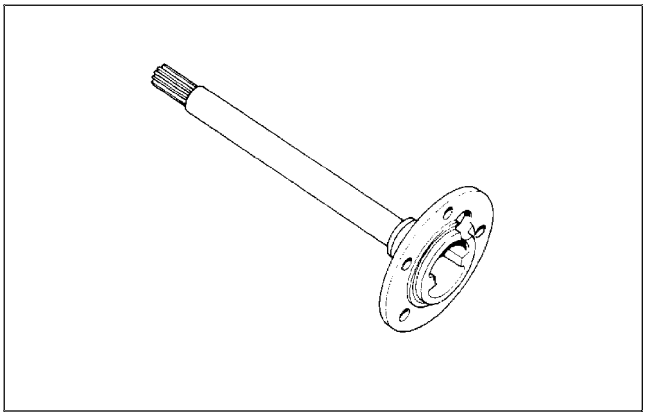

Figure 1A

Specifications

Item	Specification
Front wheel lug nut torque	45 to 55 ft-lb
Front to rear housing torque	18 to 28 ft-lb
Transmission to axle torque	25 to 30 ft-lb
Differential bearing caps torque	30 to 45 ft-lb
Ring gear to differential case torque	45 to 65 ft-lb
Fill pipe torque	20 to 30 ft-lb
Side plate (gear cover) torque	25 to 40 in-lb
Axle shaft bearing retainer (nut) torque With hex head screw With socket head screw (newer models)	 37 to 45 ft-lb 16 to 20 ft-lb
Ring gear to pinion gear backlash	0.003 to 0.007 in.
Pinion gear end play	0.00 to 0.005 in.

Special Tools

NOTE: Order special tools from the *TORO SPECIAL TOOLS AND APPLICATIONS GUIDE (COMMERCIAL PRODUCTS)*. Some tools may be listed in the Parts Catalog for your Toro equipment. Some tools may also be available from a local supplier.

Differential Gear Holder

Remove gear cover from right hand side of differential and bolt this tool in place to lock spur gear in position when removing nut that secures pinion coupler for 4WD drive shaft.

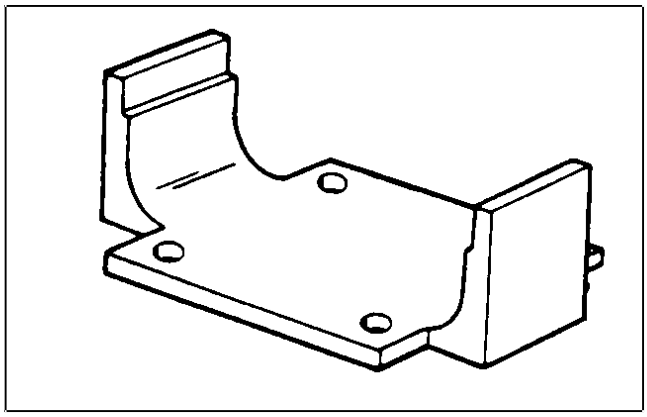

Figure 2

Axle Removal and Installation

1. Put machine on a level surface, lower cutting units, stop the engine and remove key from ignition switch. Block rear wheels to prevent machine from moving.

2. Remove the cutting units. (See the Repairs section of Chapter 8 - Cutting Units.)

3. If unit is equipped with 4WD, remove rear axle drive shaft (see Chapter 9 - 4WD Axle). Remove nut, pinion spacer and pinion coupler.

5. Remove hydrostatic transmission. (See Repairs section of Chapter 4 - Hydraulic System.) Keep transmission support attached to frame and gear pump attached to transmission support.

6. Slightly loosen all front wheel lug nuts. Jack both front wheels off the ground and install jackstands or blocks under traction unit frame (not axle tubes) to prevent machine from falling. Remove both front wheels.

7. Remove the cotter pin and clevis pin to disconnect the brake cable from brake actuating lever on each brake. Loosen jam nut to remove brake cable from each end of axle bracket. Disconnect speedometer sensor wire connector.

9. Put a jack or blocking under differential to hold it in place. Remove cap screws and lock nuts securing axle mounting pads to frame. Carefully lower differential axle and pull it out from under traction unit.

10. To install axle , reverse steps 1 - 9. Apply silicone sealant between axle housing and transmission support. Leave axle mounting pad nuts loose. Install shims (P/N 42-6080) between axle mounting pads and frame to align differential with transmission support, then tighten axle mounting nuts.

11. Before installing pinion coupler, apply Permatex No. 2 to external splines of pinion and internal splines of pinion coupler. Tighten nut securing pinion coupler. Tighten nut to 75 - 90 ft-lb (102 - 122 N-m)

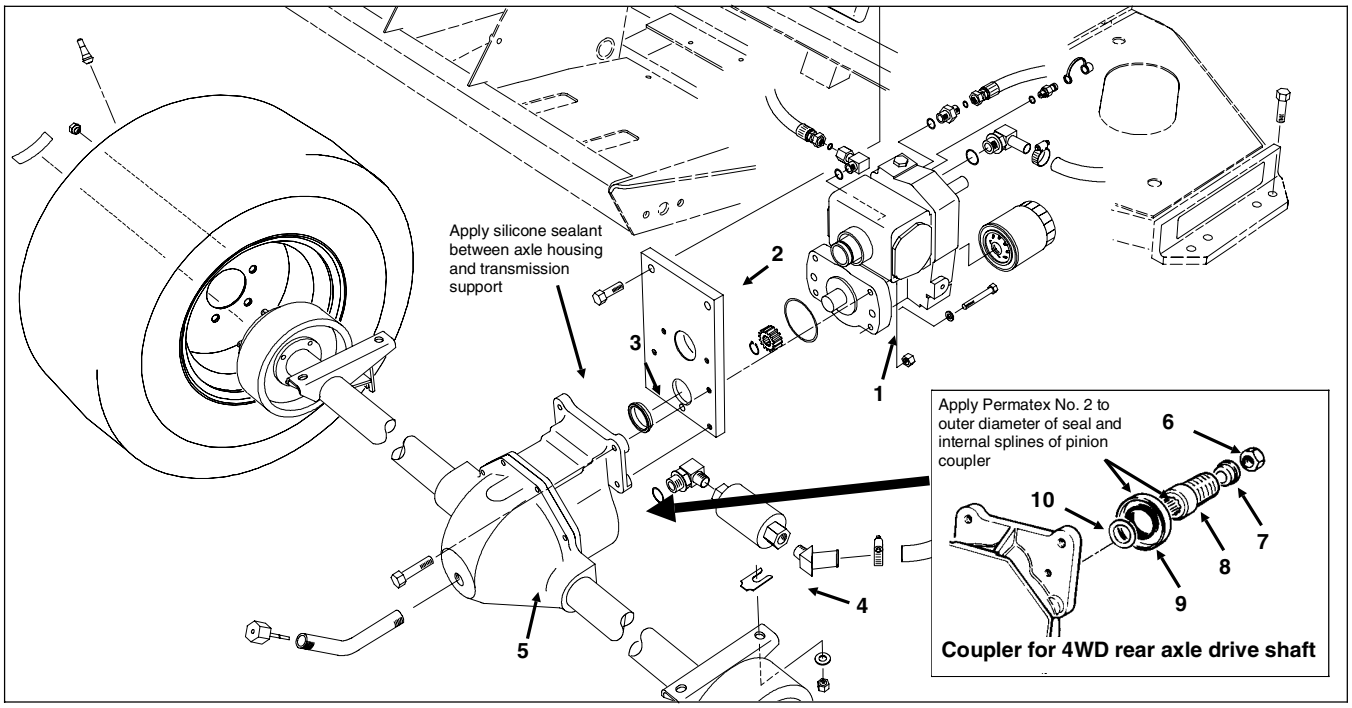

Figure 3

1. Hydrostatic transmission
2. Transmission support
3. Transmission collar
4. Axle shim
5. Differential axle
6. Nut
7. Spacer
8. Pinion coupler
9. Seal
10. Shim

Axle Shaft Disassembly and Wheel Bearing Service

NOTE: When servicing the bearing and seal area of the axle shaft, it is recommended that you replace hex head screws and flange nuts with socket head screws (94-6934), washers (94-6936) and nuts (94-6935). See Figure 18.

1. After the wheel has been removed, slide the brake drum off of the axle flange (Fig. 5).

NOTE: It may be necessary to loosen the brake shoes by turning the star wheel inside the brake drum assembly. (See Chapter 7 - Steering and Brakes.)



Figure 5

2. Line up the hole in the axle shaft flange and remove the backing plate nuts which hold the axle shaft assembly to the axle housing. Use a 1/2 inch socket wrench (Fig. 6).

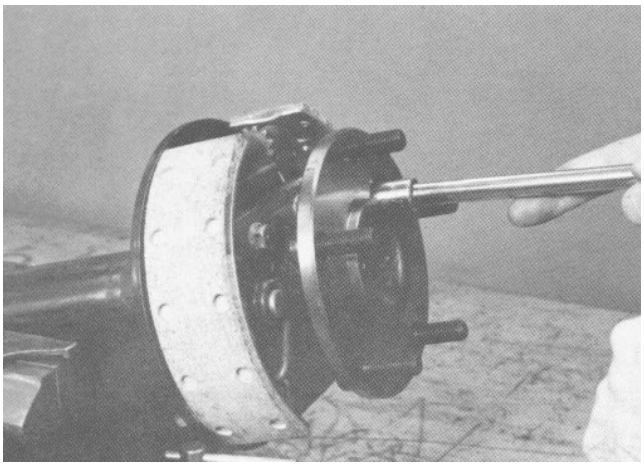

Figure 6

3. Pull out the axle shaft and brake assembly (Fig. 7).

NOTE: Bearing races and retainer ring are cemented together with an epoxy adhesive. If the bearing and race come apart, remove the bearing cup from the housing with a puller.

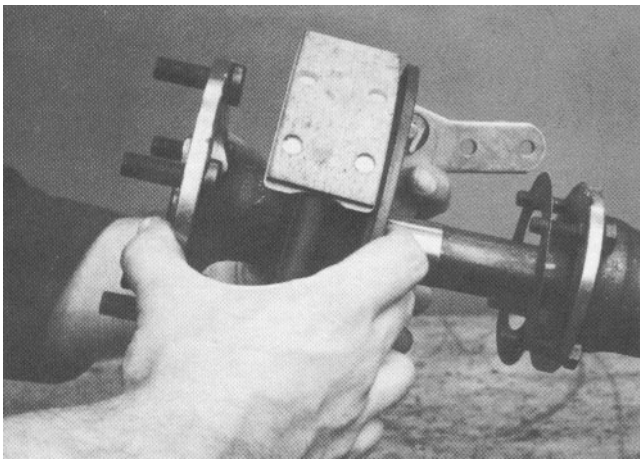

Figure 7

4. Remove the inner axle shaft seal (Fig. 8). Discard the seal and replace with a new one at the time of assembly.

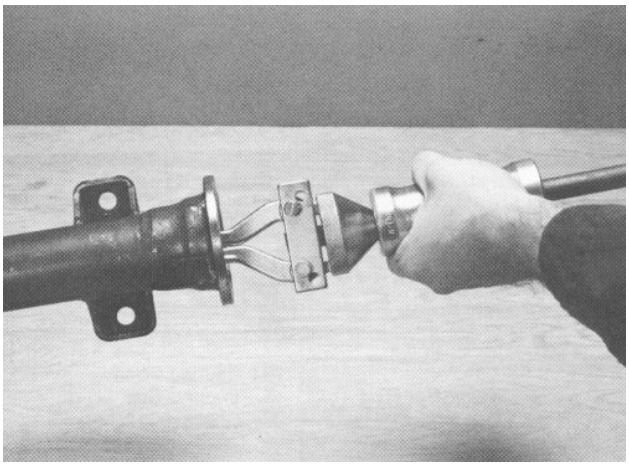

Figure 8

5. Center punch the outside of the retaining ring (Fig. 9).

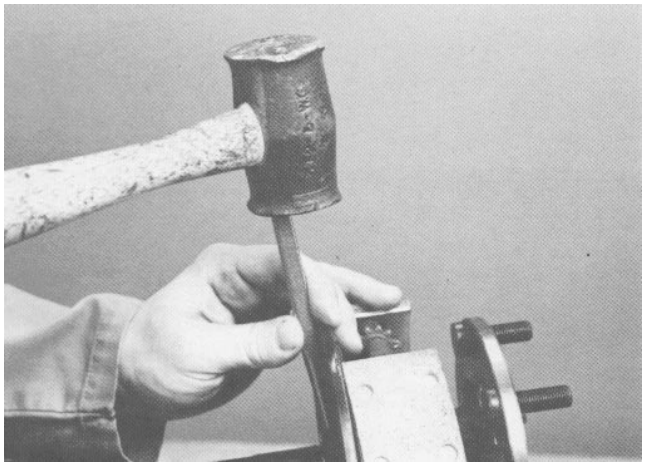

Figure 9

6. Drill a 1/4 inch hole (approximate) into the outside of the retainer ring to a depth of about 3/4 the thickness of the ring (Fig. 10).

IMPORTANT: Drilling completely through the retainer ring could damage the shaft.

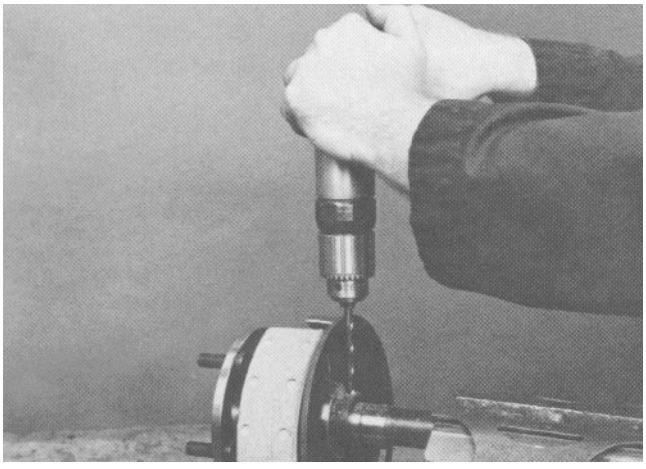

Figure 10

7. After drilling, put a chisel in position across the hole and strike sharply to break the ring. Replace with a new ring at time of reassembly (Fig. 11).

WARNING

Wear protective safety goggles when breaking the retaining ring. Personal injury could result from flying metal particles. Keep all personnel away during this procedure.

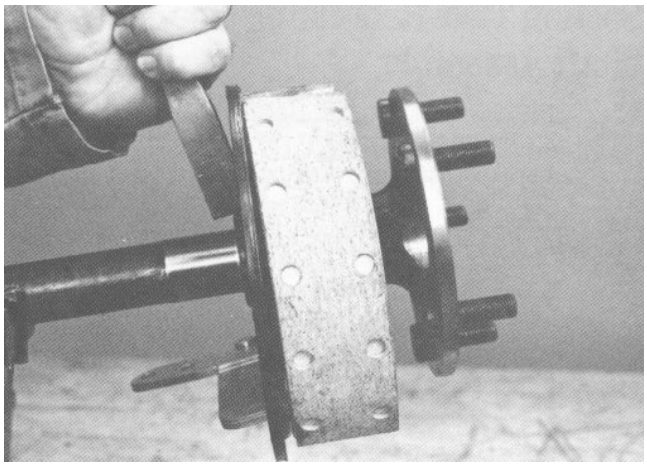

Figure 11

8. Inspect the shaft for possible damage (Fig. 12). Inspect the sealing surface of the hub and shaft. Replace it if the seal has grooved the surface more that 1/64 inch (0.4 mm).

9. Put a new grease seal, brake assembly, and a new grease packed bearing (in that order) onto the axle shaft.

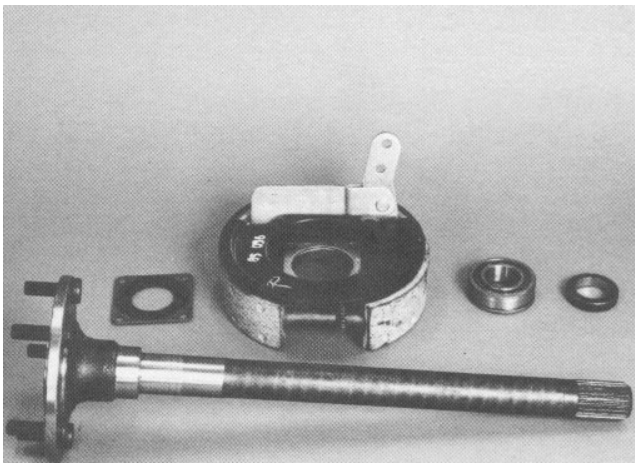

Figure 12

10. Press the assembly until the bearing is firmly seated against the axle shaft shoulder (Fig. 13).

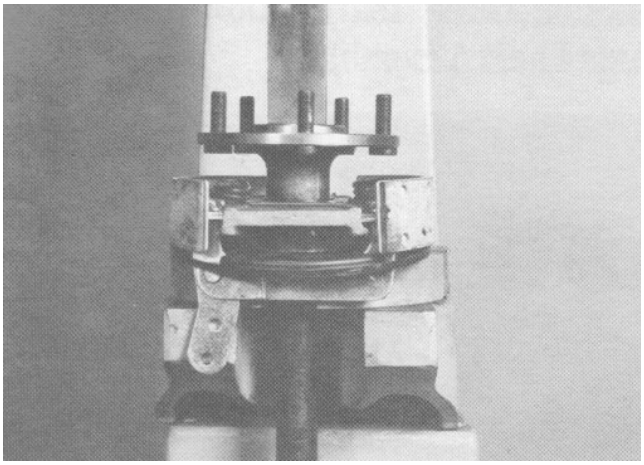

Figure 13

11. Slide a new retaining ring on the axle shaft and support the shaft and ring in a suitable press (Fig. 14). Press the retaining ring firmly against the bearing.

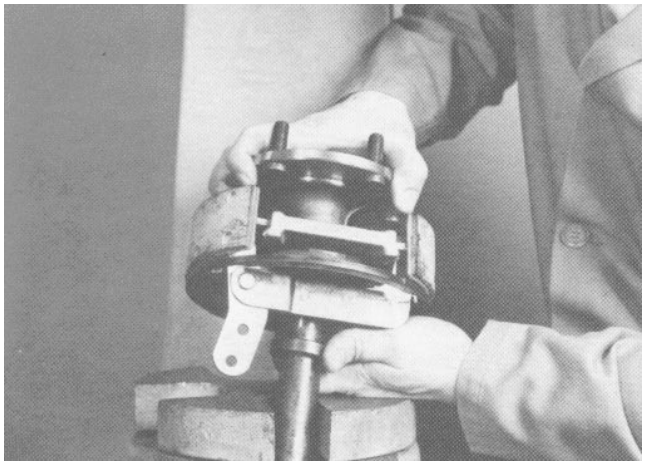

Figure 14

12. Put a light coating of No. 1 Permatex on the outside diameter of a new grease seal (surface that contacts the axle housing). Install the new seal to a depth of 1.218 in. into the housing (Fig. 15, 16). After the seal has been assembled, put grease on the lip of the seal.

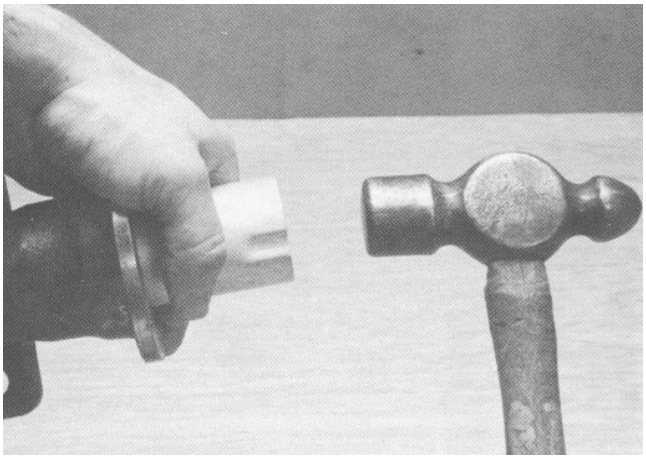

Figure 15

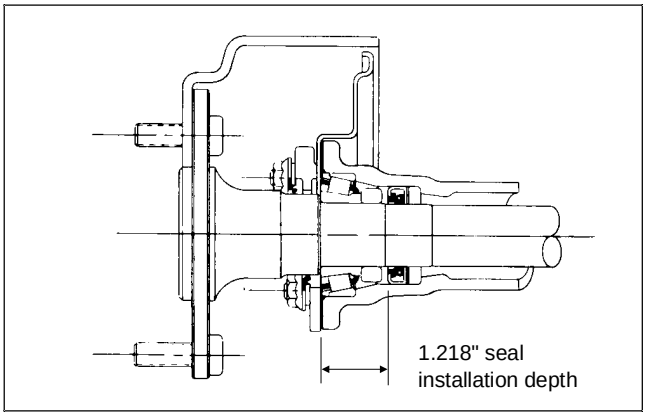

Figure 16

13. Assemble the bearing retainer bolts to the axle housing. Apply a .0625 in. (16 mm) bead of gasket material to flange on end of axle housing, then install the axle shaft assembly into the axle housing. Be careful not to damage the, oil seal and bearing. Line up the holes of the brake assembly and oil seal. Push the axle shaft as far as possible into the axle housing (Fig. 17).

Wheel end gasket material: P/N 92-8775 Liquid Gasket Kit (Kit contains Loctite Ultra-Gray gasket eliminator and instructions)

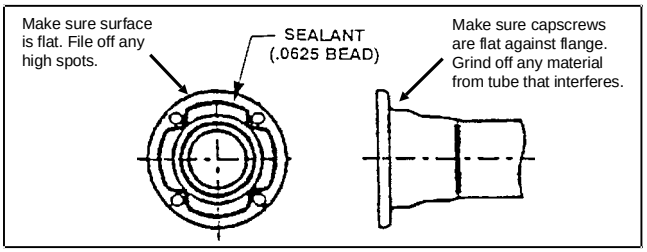

14. Start the nuts by hand. Tighten the nuts so the bearing assembly is drawn evenly into the axle housing (Fig. 18). **NOTE:** It is recommended that you replace hex head screws and flange nuts with socket head screws, washers and nuts (Fig. 18). If installing socket head screws, tighten the nuts to a torque of 16 - 20 ft.-lb. (2 - 3 Kgm). If reinstalling hex head screws, tighten the nuts to a torque of 37 - 45 ft.-lb. (5 - 6 Kgm).

IMPORTANT: Hold the socket head screw or hex head screw when tightening the nut to prevent the head from turning into the tube radius.



Figure 17

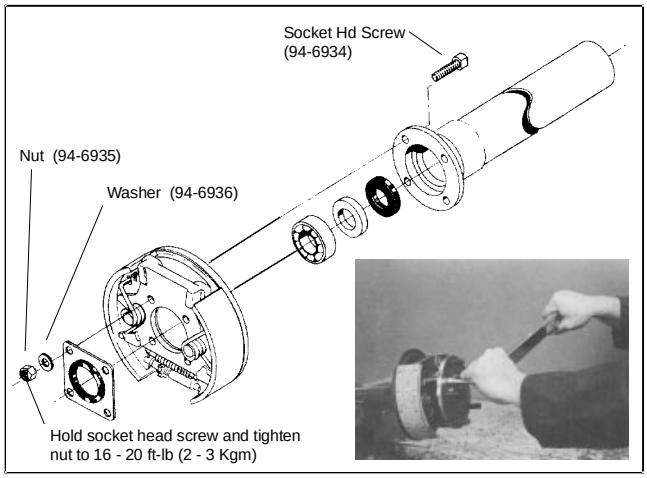

Figure 18

Differential and Housing Disassembly

1. Remove the right and left-hand axle assemblies. (See Axle Shaft Disassembly and Wheel Bearing Service in this section of the book.)

Remove the eight (8) housing cap screws and separate the upper and lower axle housings (Fig. 19). Clean the gasket material from the mating surfaces before reassembly.

NOTE: A complete Upper Housing Assembly for Differential repairs is available. Using this assembly eliminates the need for “trial and error” shimming procedures to establilsh the correct contact pattern between the ring and pinion gears.

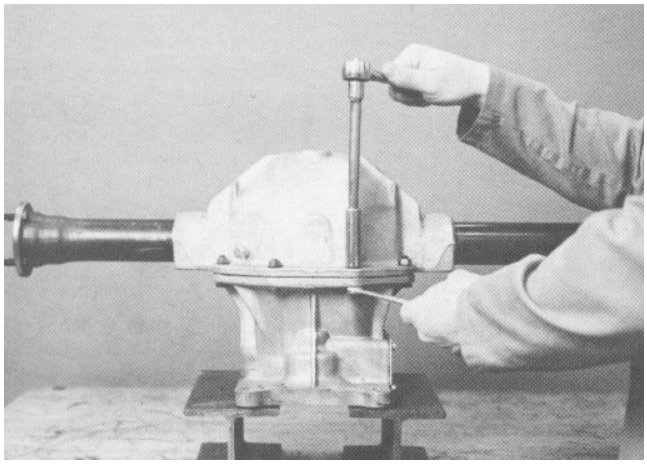

Figure 19

2. Remove the four bearing cap screws and remove the caps. Place the caps in a safe place to avoid damaging their machined surfaces (Fig. 20).

The bearing caps are marked for identification. The letters or numbers are in horizontal and vertical positions. When reassembling, place them back in the same position.

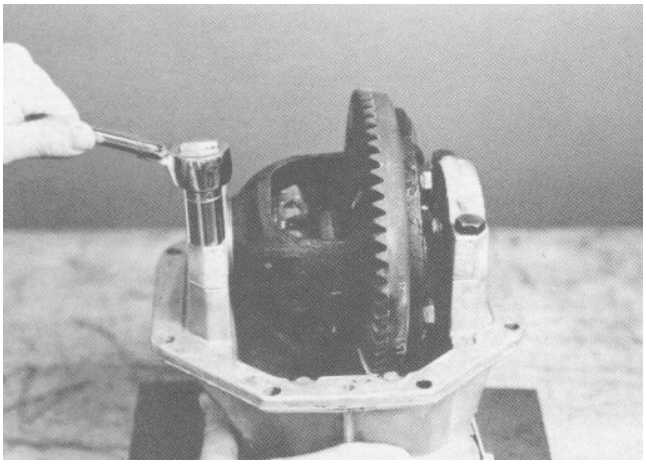

Figure 20

3. To remove the differential assembly, place two wooden devices (i.e. hammer handles) under the differential case and pry firmly upward. The bearing cups must be kept with their mating cones (Fig. 21).

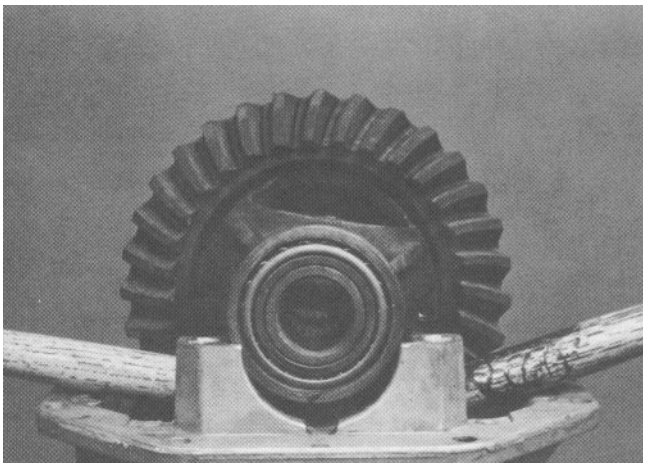

Figure 21

4. Remove the ring gear cap screws. Using a hard wooden block and a hammer, drive the ring gear off of the differential case. Be prepared to protect the ring gear when removing it from the differential case; this will avoid damage of the ring gear teeth (Fig. 22).

NOTE: It is recommended that whenever the ring gear screws are removed, they are to be replaced with new screws.

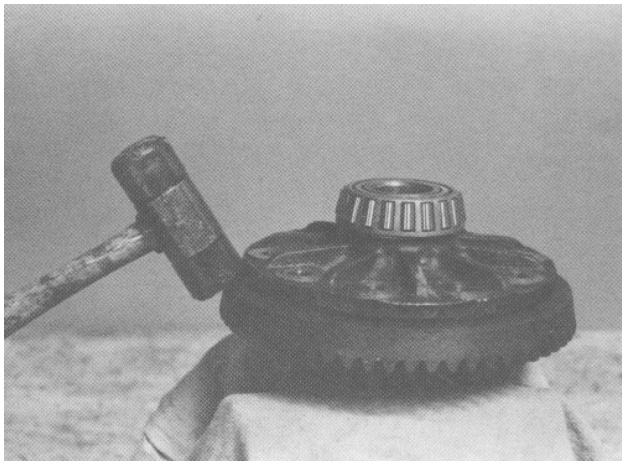

Figure 22

5. Do not remove the bearings from the differential case unless bearing failure is evident. It is recommended that whenever bearings are removed (regardless of usage) they must be replaced with new ones. Remove the case side bearing with a puller as shown (Fig. 23).

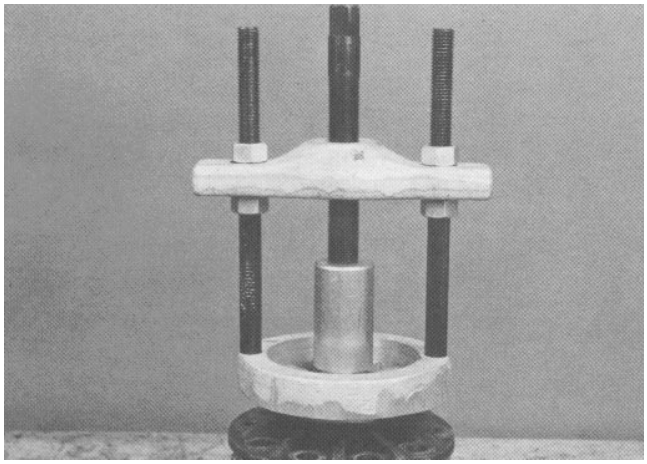

Figure 23

6. Put the case in a vise. Drive the lock pin out of the pinion shaft (Fig. 24). Use a small drift punch as shown.

WARNING

To prevent personal injury, always wear a face shield or safety goggles when striking a drift punch with a hammer.

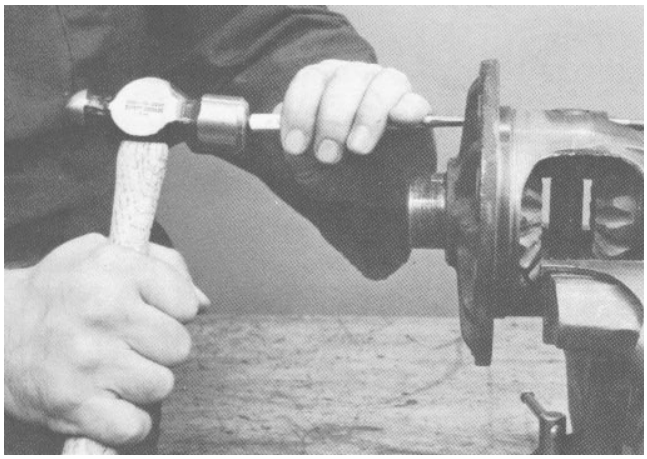

Figure 24

7. While supporting the differential in a vise, drive the pinion mate shaft from the differential with a long drift punch (Fig. 25).

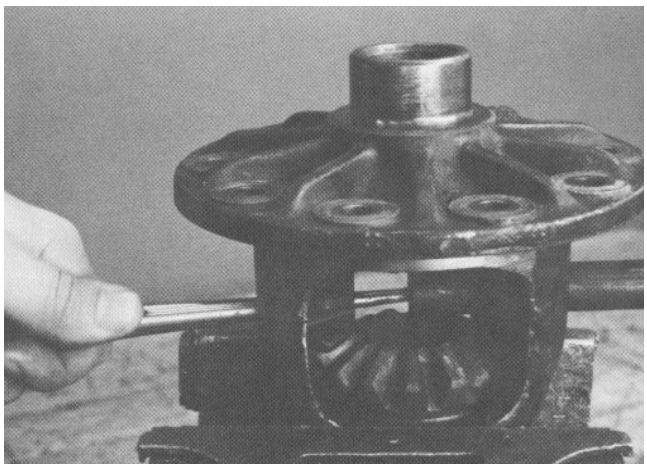

Figure 25

8. To remove the side gears and pinion mate gears, rotate the side gears. This will allow the pinion mate gears to turn to the opening of the case (Fig. 26). Remove the pinion mate gears and the spherical washers behind the gears.

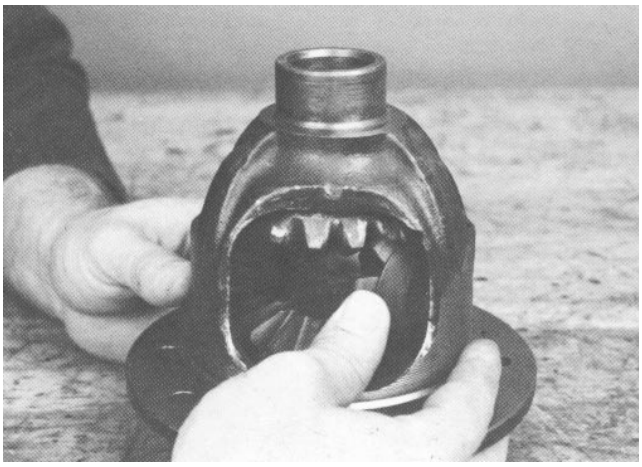

Figure 26

9. Remove the eight side cover capscrews. Remove the the side cover from the carrier assembly (Fig. 27). Clean the gasket material from the mating surfaces before reassembly.

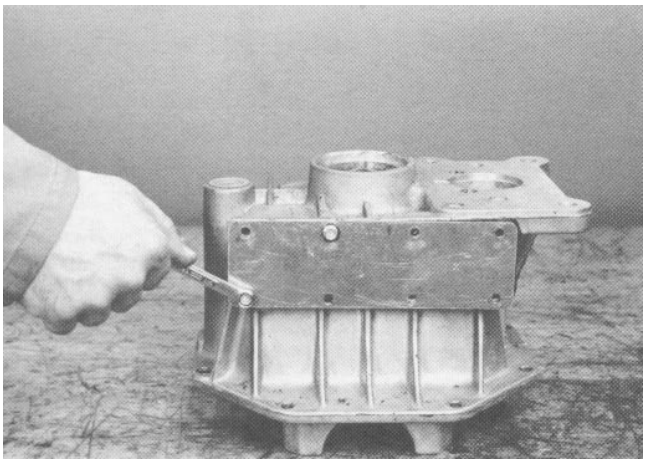

Figure 27

10. If unit has an expansion plug, remove it by driving a pointed punch through the plug about 3/8 inch (10 mm) from the outer edge. When the hole is large enough, insert a large screwdriver through it and pry the plug outward (Fig. 28).

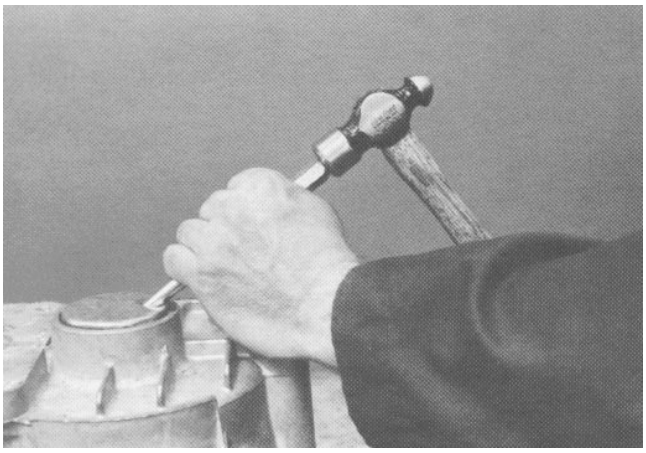

Figure 28

11. Before pressing pinion out of housing:

If unit was equipped with an expansion plug (removed in step 10), remove the snap ring and shim from the end of the pinion (Fig. 29).

If unit is equipped with a pinion coupler for 4WD (no expansion plug), nut, pinion spacer and pinion coupler (Fig. 3) must be removed before pressing pinion out of housing.

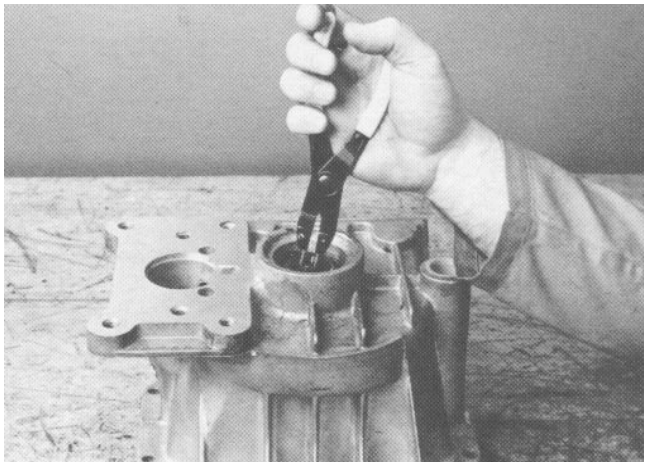

Figure 29

12. Position the housing assembly on a suitable press. Place a 1/8 inch (3 mm) piece of steel or a screwdriver blade under the edge of the spur gear. This will prevent the spur gear from cocking and possibly cracking the housing (Fig. 30).

When the pinion is close to being pressed completely out of the bearing, reach under the housing and catch the pinion in your hand to prevent any damage to the pinion.

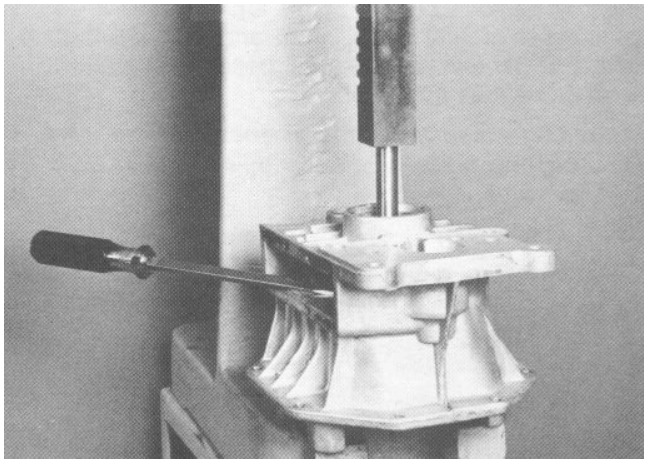

Figure 30

Removing the drive pinion releases the spur gear, spacer, and outer pinion bearing for removal (Fig. 31).

If unit was equipped with a pinion coupler for 4WD (no expansion plug), remove oil seal from housing (Fig. 3).

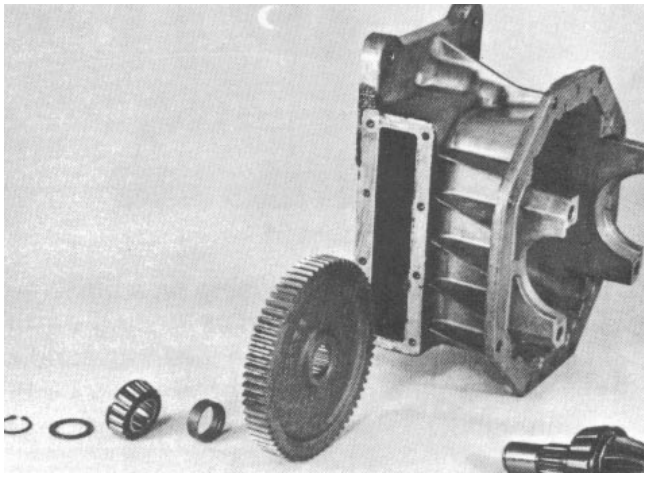

Figure 31

13. Clamp the inner pinion bearing with a universal bearing remover (Fig. 32). Position the unit in a press and carefully push the drive pinion out of the bearing.

DO NOT allow the pinion to drop on the floor - damage will result.

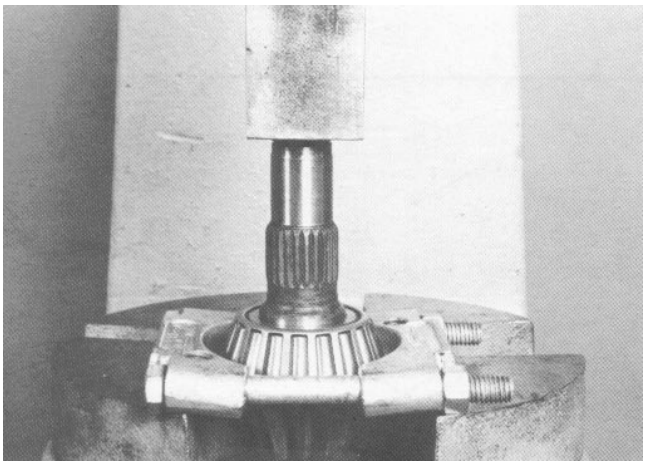

Figure 32

14. To remove the outer pinion bearing cup, position the housing in a press. Place a press plate of the proper size against the cup. Press the cup out of the housing (Fig. 33).

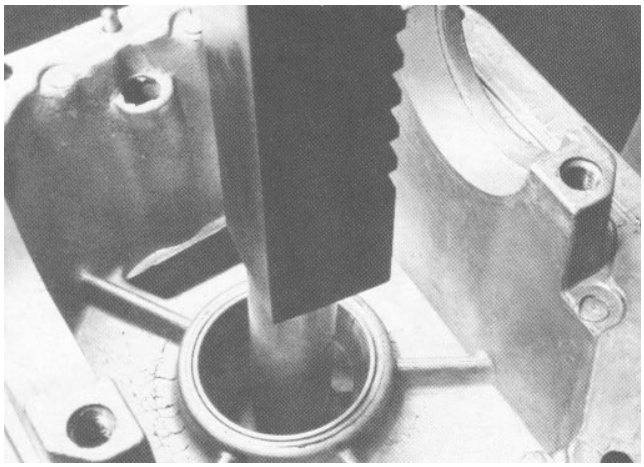

Figure 33

15. Position the front housing on a press bed with the bearing saddles resting on the press bed. Protect the bearing saddles with a strip of wood if the press bed is rough.

Insert a press plate of the proper size and press the bearing cup toward the inside of the housing. Retain the shims located under the bearing cup (Fig. 34). If the shims are damaged, replace with new shims of the same thickness.

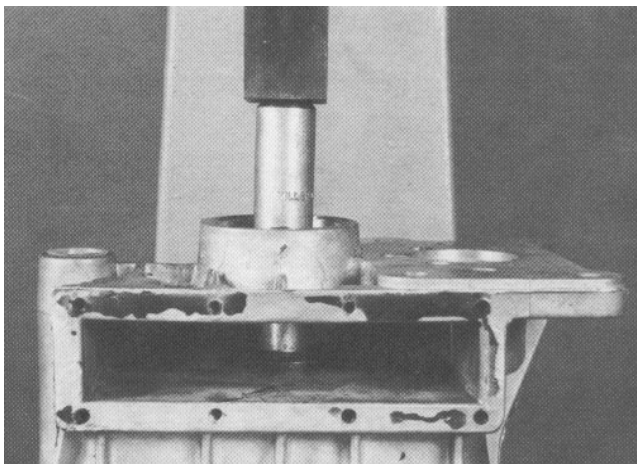

Figure 34

Differential and Housing Reassembly

1. Inspect the differential parts for damage before assembling.

   A. If any bearings are damaged they must be replaced with new ones.

   B. Check the ring, pinion, and spur gear for abnormal wear and damage; replace worn components.

   C. Inspect the housings for cracks and external damage that could affect the operation of the axle assembly.

   D. Inspect the differential case for wear in the side gear and pinion mate area. Replace the case if its machined areas are scored or if the pinion mate shaft fits loosely in the bore.

2. Press the inner pinion bearing onto the pinion drive gear. Support the bearing on the inner cup of the bearing ONLY WHEN INSTALLING (Fig. 35).

3. Put the front housing on a press. Using a press plate, push the outer pinion bearing cup into the housing until it bottoms in the housing (Fig. 36).

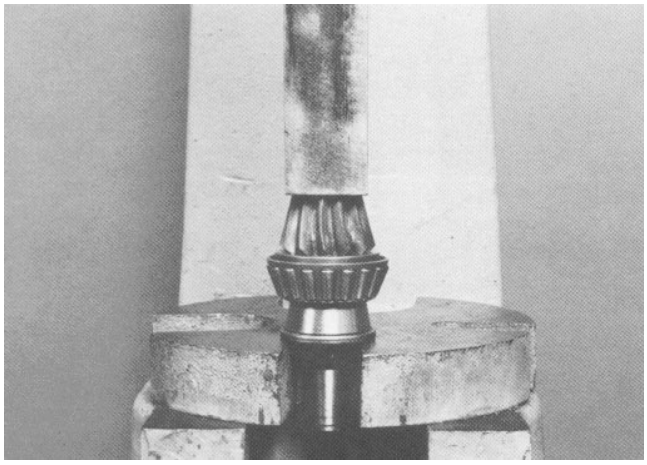

Figure 35

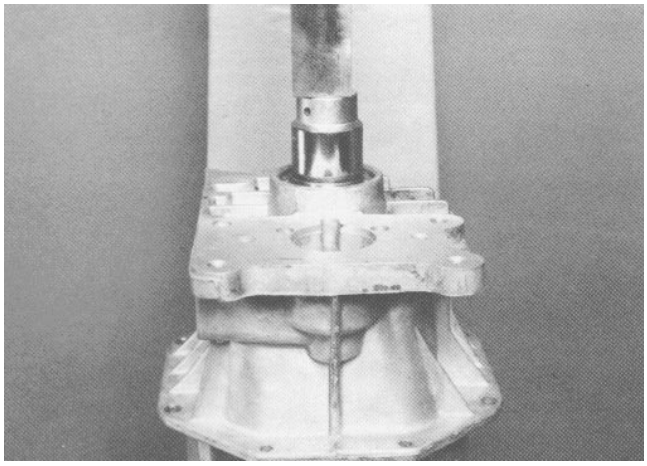

Figure 36

Ring and Pinion Set

Rings gears and pinions are supplied in matched sets only. Matching numbers are etched on both the pinion and ring gear (Fig. 37).

The mounting distance from the bottom of the differential bearing bores to the button end of the pinion is 1.210 in.

On the button end of each pinion there is a plus (+) or minus (–) number, or a (0) number. This number indicates the best running position for each particular gear set. This dimension is controlled by the shimming behind the inner bearing cup.

For example, if a pinion is etched +3, this pinion would require 0.003 in. less than a pinion etched “0". This means that by removing shims, the mounting distance of the pinion is increased to 1.213 in., which is just what +3 indicates. Or if a pinion is etched –3, we would want to add 0.003 in. shims, the mounting distance of the the pinion was decreased to 1.207 in., which is just what a –3 etching indicates.

If a new gear set is being used, notice the (+) or (–) etching on both the old and new pinion and adjust the thickness of the new shim pack to compensate for the difference of these two numbers.

For example: If the old pinion reads +2 and the new pinion is –2, add .004 in. shims to the original shim pack.

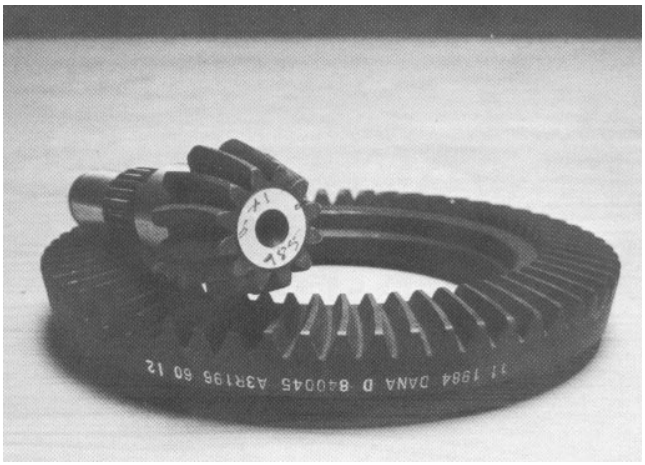

Figure 37

4. Install a new inner bearing cup using a press plate of proper diameter. Reuse the original shims or use new shims of the same thickness. Push the bearing cup into the housing until it bottoms against the housing (Fig. 38).

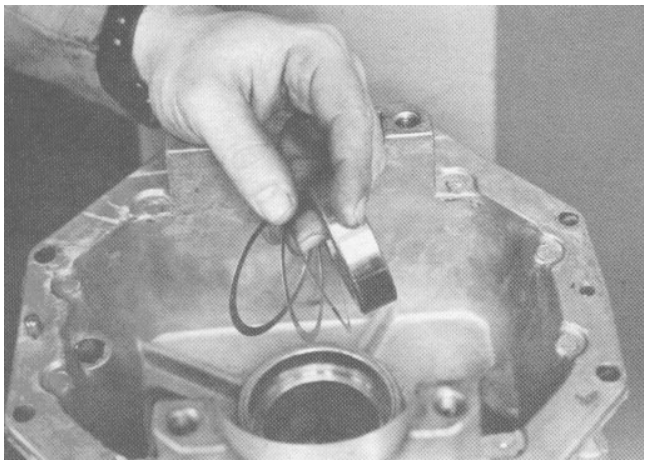

Figure 38

5. Insert the pinion into the housing.

NOTE: A number marked on the new ring and pinion set is used to establish the proper amount of shims required prior to installing the pinion gear (see page 15). The final pinion position will be verified by using the gear contact pattern method as described on page 21of this chapter.

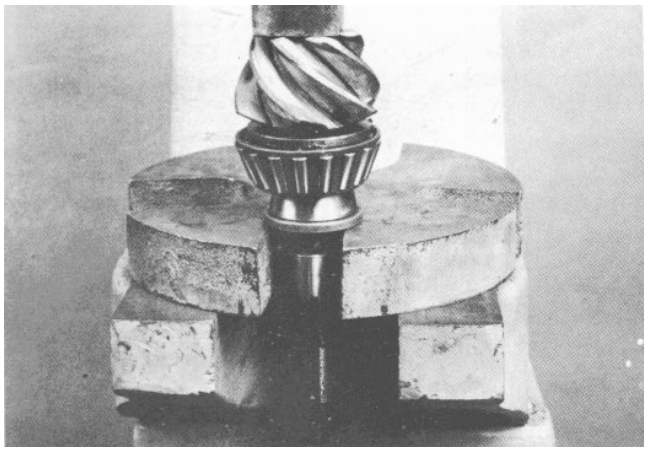

Figure 39

6. Insert the spur gear into the front housing with the chamfered area of the center spline toward the drive pinion. Install the drive pinion with a soft mallet to engage the splines in the spur gear (Fig. 40).

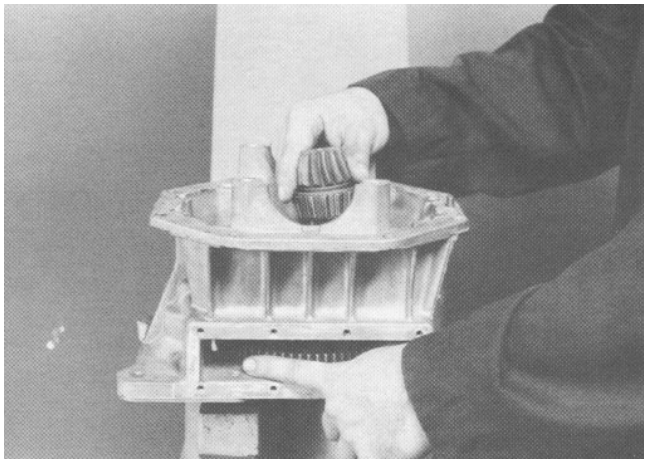

Figure 40

7. Support the drive pinion in a suitable press (Fig. 41).

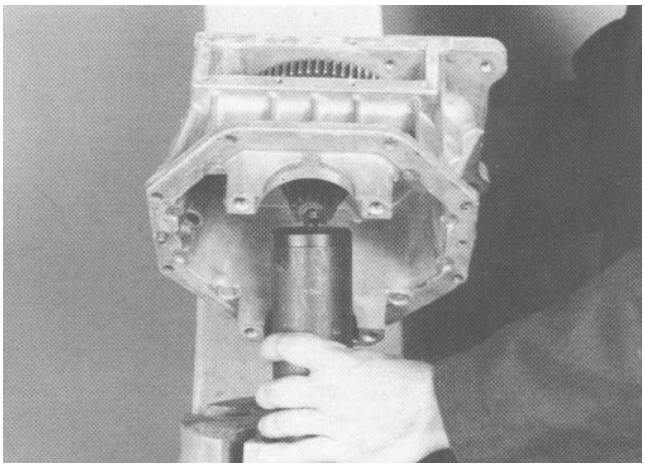

Figure 41

8. Install the outer pinion spacer with the chamfer towards the pinion splines and install the new outer pinion bearing cone (Fig. 42).

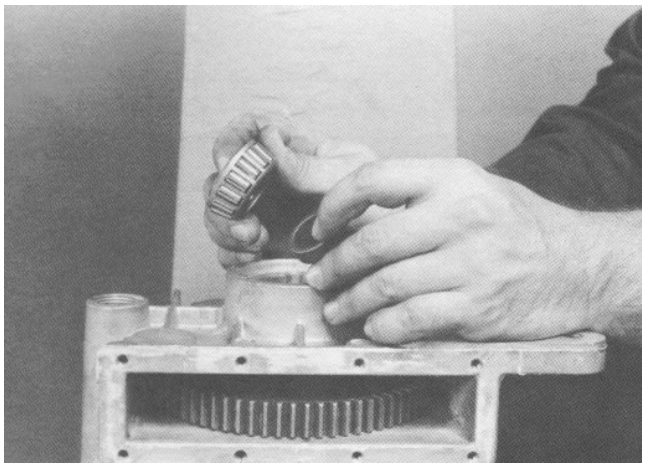

Figure 42

9. With a hollow press sleeve of proper diameter, press on the outer bearing cone race until the drive pinion seats in the carrier and a slight drag is noticed when the gear is rotated by hand (2-13 in.-lb. torque to rotate) (Fig. 43). If the drag is to severe, tap the pinion shaft with a soft mallet until the drag is reduced.

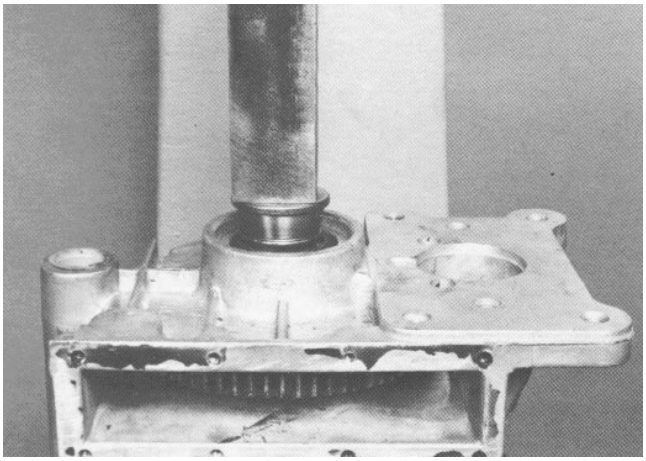

Figure 43

10. Install the shim and snap ring onto the end of the pinion shaft. Use the thickest shim possible which will permit installation of the snap ring (Fig. 44). Limit the end play to 0.000 - 0.005 inch (0.000 - 0.127 mm).

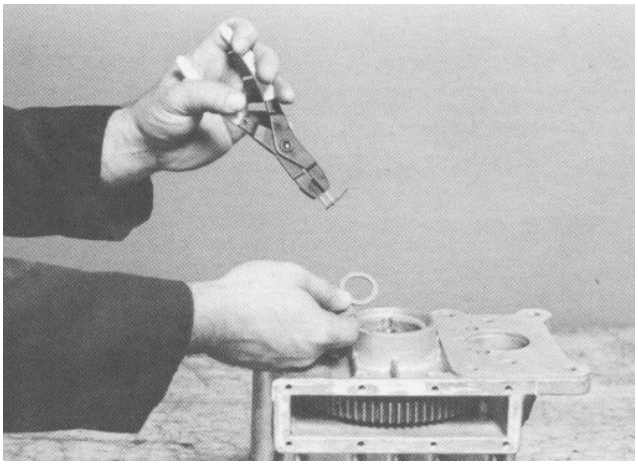

Figure 44

11. Apply a small bead of Permatex No. 2 or silicone sealant to the outer edge of the carrier bore. Install the expansion plug (or seal if equipped with pinion coupler for 4WD) into carrier until plug or seal seats firmly in carrier bore (Fig. 45).

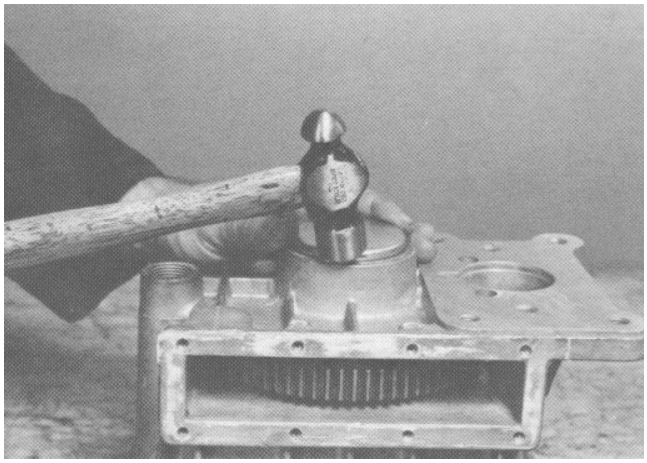

Figure 45

12. Install the spur gear cover. Use Permatex No. 2 or silicone sealant when installing the cover. Tighten the capscrews to a torque of 25 - 40 in.-lb. (Fig. 46).

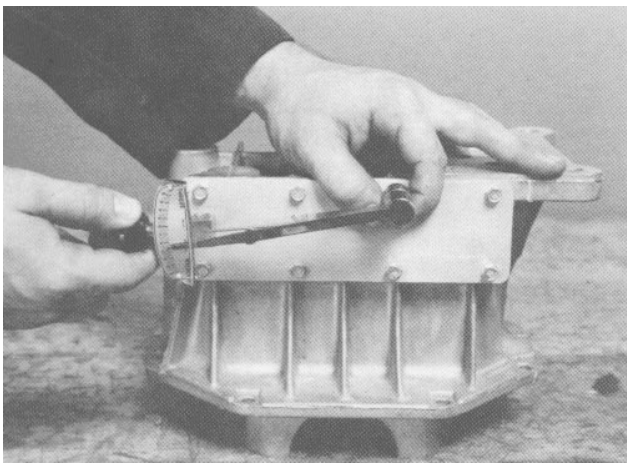

Figure 46

13. Place the differential case in a vise as shown (Fig. 47). Apply grease to new side gear thrust washers and hubs of the side gears. Apply grease to new pinion mate spherical washers and pinion mate gears. Place the side gears and thrust washers in the case. Install the pinion gears while holding the side gears in place.

Rotate the side gears until the holes of the washers and pinion gears line up with the holes of the case. If the gears cannot be rotated by hand, install one of the axle shafts into the side gear spline and use a pipe wrench to turn the shafts.

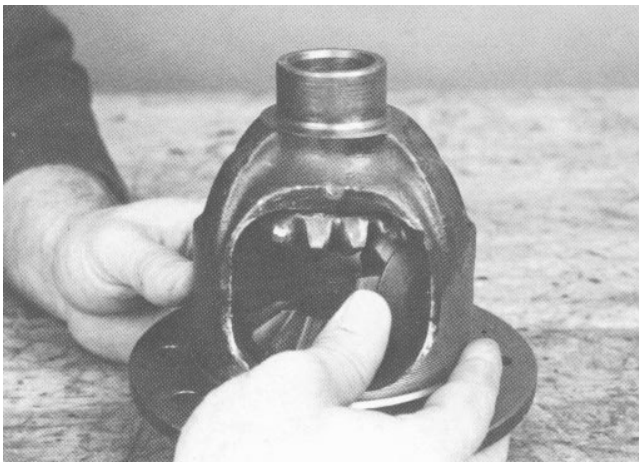

Figure 47

14. Install the pinion shaft. Grease the shaft to aid assembly. Be sure the hole in the pinion shaft lines up with the hole in the differential case (Fig. 48).

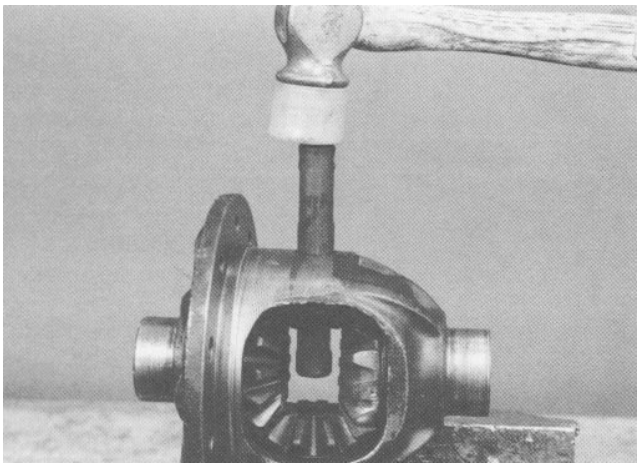

Figure 48

15. Assemble the lock pin. Drive the pin to the approximate center location of the pinion mate shaft. Peen the metal of the case to lock the pin in place (Fig. 49).



Figure 49

16. Put the ring gear onto the differential case and start the new capscrews into the gear with your fingers. Tighten the screws, alternating back and forth across the gear to allow the gear to be pulled evenly into place. Tighten the cap screws to a torque of 45 - 65 ft-lb (6.2 - 9.0 KgM) (Fig. 50).

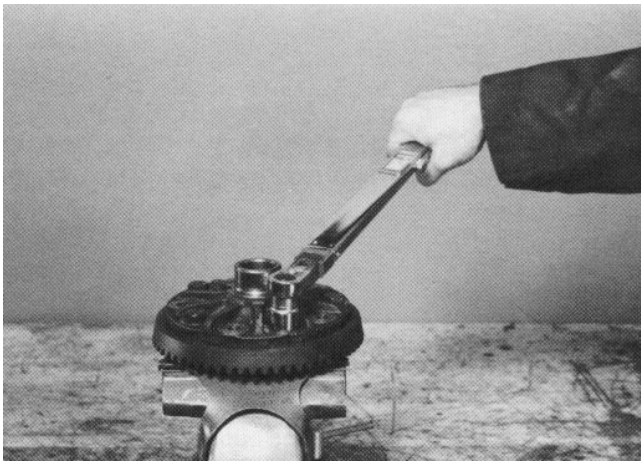

Figure 50

17. When installing new differential bearings, reuse the original shims or use new shims of the same thickness. Press the bearing onto the differential case. If a new differential case is being installed, start with a .020 inch pack of shims under each differential bearing. Shims are available in .003, .005, .010, and .030 inch sizes (Fig. 51).

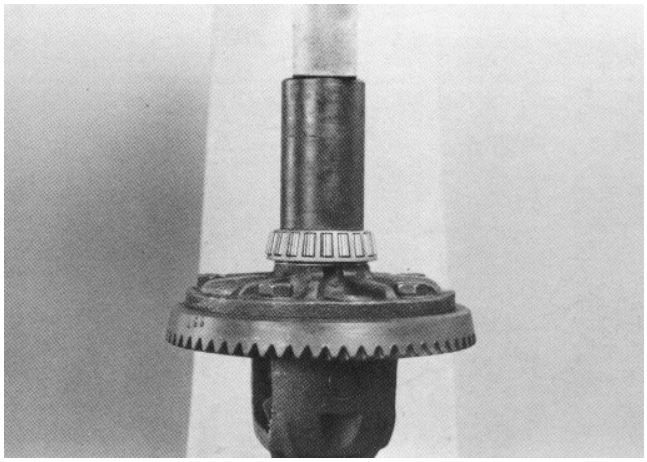

Figure 51

18. Assemble new differential bearing cups to differential bearing cones. Seat differential assembly with drive gear on proper side of carrier into carrier bearing cradles.

NOTE: The Reelmaster 223-D/5100-D/5300-D application requires that the ring gear teeth face toward the spur gear cover.

The bearing cradles are designed to apply a slight preload to the bearings. It is important to push both of the bearing assemblies simultaneously into their saddles.

Install the bearing caps into their original position as previously marked. Tighten the cap screws to a torque of 30 - 45 ft-lb (4.1-6.2 KgM) (Fig. 52).

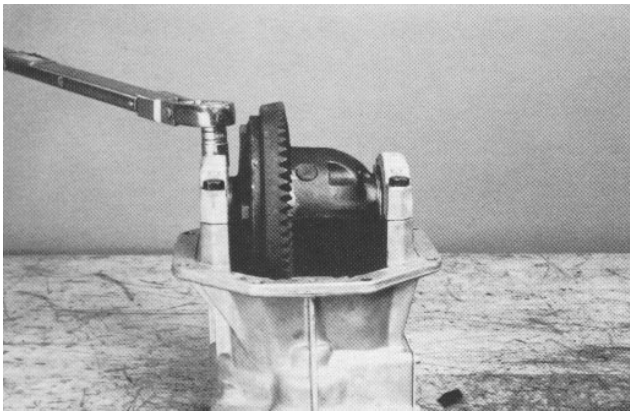

Figure 52

19. Using a dial indicator, check the ring gear backlash in three equally spaced points. Ring gear backlash should be .003 - .007 inch (.076 - .178 mm) and must not vary more than .002 in. between points checked (Fig. 53).

If the backlash is not in this range, move the shims which are located beneath the differential bearings, from one side to the other until the correct backlash is attained.

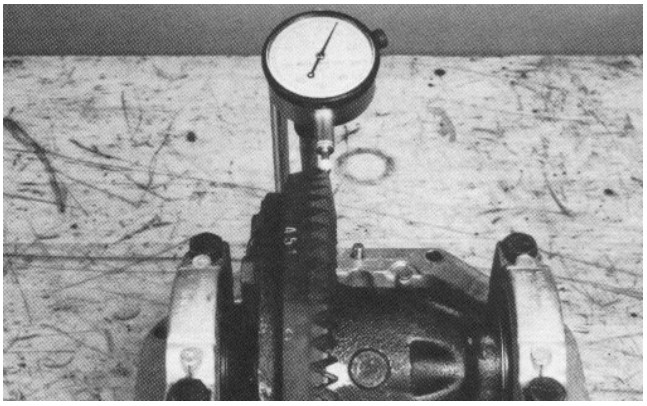

Figure 53

Checking Ring Gear Pattern

Final position of pinion is verified by using the gear contact pattern method as described in the following procedure.

Gear tooth **Toe** - the portion of the tooth surface at the end towards the center.
Gear tooth **Heel** - the portion of the gear tooth at the outer end.
Gear tooth **Top Land** - top surface of tooth.

Every gear has a characterisitc pattern. The illustrations show typical patterns only and explaing how patterns shift as gear location is changed. When making pinion position changes, shims should be changed in the range of .002 inch to .004 inch until a correct pattern has been obtained.

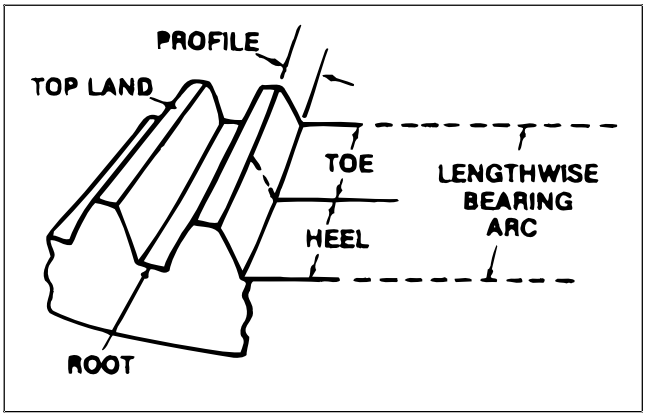

Figure 54

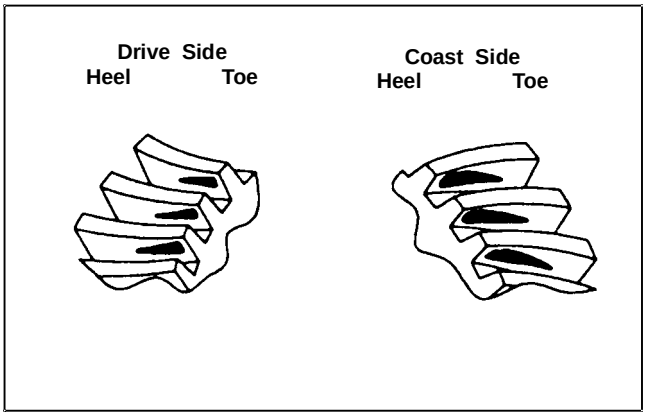

Figure 54A

When a change in backlash is required, backlash shims should be changed in the range of 1-1/2 times the amount of backlash required to bring the gears into specification. For example, if the backlash needed to be changed by .004 inch, the shim pack should be changed by .006 inch as a starting point.

High backlash is corrected by moving the ring gear closer to the pinion. Low backlash is corrected by moving the ring gear away from the pinion. These corrections are made by switching shims from one side of the differential case to the other.

To check the ring gear and pinion pattern:

1. Paint the teeth of the ring gear, both drive and coast side, with a gear marking compound, such as DyKem Steel Blue.

2. While applying a light load to the ring gear, rotate the pinion gear until the ring gear has made one complete revolution. Study the patterns in the following illustrations and correct as necessary.

The preferred pattern is shown in Figure 54A. The drive side pattern should be located at the toe portion of the tooth. The coast pattern should also be at the toe portion of the tooth.

NOTE: When making changes, note that two variables are involved. Example: If you have the backlash set correctly to specifications and you change the pinion position shim, you may have to readjust backlash to the correct specification before checking the pattern.

Backlash correct. Thicker pinion position shims required.

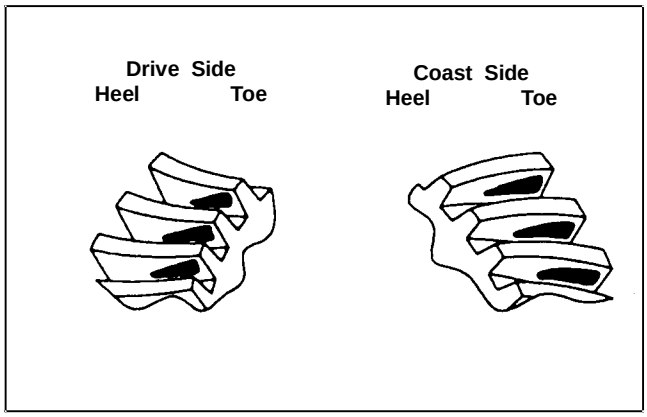

Figure 55

Backlash correct. Thinner pinion position shims required.

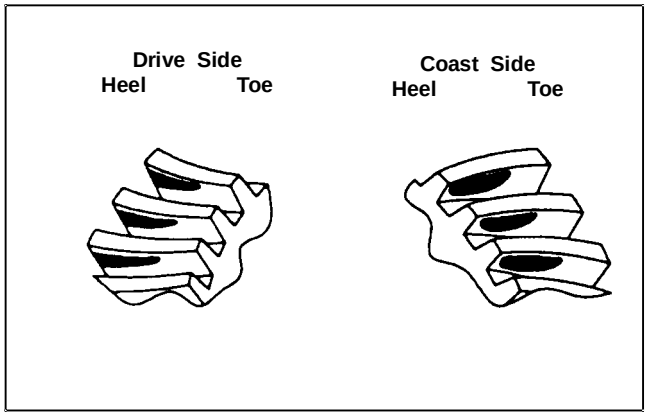

Figure 56

Backlash incorrect. Thinner pinion position shim required. Adjust backlash to match.

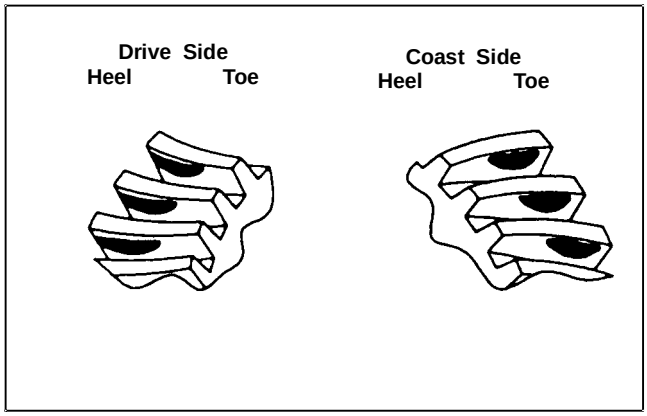

Figure 57

Gear Pattern Movements Summary

1. Decreasing backlash moves the ring gear closer to the pinion.

   Drive pattern (convex side of gear) moves lower and toward the toe.

   Coast pattern (concave side of gear) moves slightly higher and toward the heel.

2. Increasing backlash moves the ring gear away from the pinion.

   Drive pattern moves higher and toward the heel.

   Coast pattern moves slightely lower and toward the toe.

3. Thicker pinion position shim with the backlash constant moves the pinion closer to the ring gear.

   Drive pattern moves deeper on the tooth (flank contact) and slightly toward the toe.

   Coast pattern moves deeper on the tooth and toward the heel.

4. Thinner pinion position shim with backlash constant moves the pinion further from the ring gear.

   Drive pattern moves toward the top of the tooth (face contact) and toward the heel.

   Coast pattern moves toward the top of the tooth (face contact) and toward the heel.

Apply silicone sealant between the front and rear axle housings and install the eight housing cap screws. Tighten the cap screws to a torque of 18 - 23 ft-lb (2.5 - 3.2 KgM) (Fig. 58).

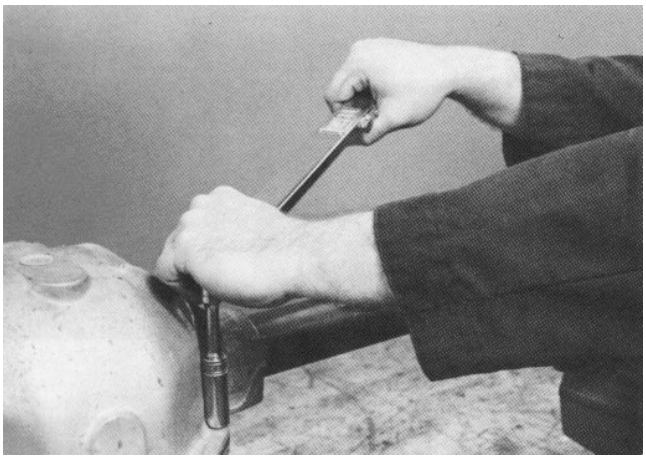

Figure 58

Chapter 7

Steering And Brakes

Table of Contents

INTRODUCTION 2
SCHEMATICS 3
SPECIFICATIONS 4
SPECIAL TOOLS 4
TROUBLESHOOTING 5
TESTING 7
- Steering Valve and Pump Tests 7
- Steering Cylinder Internal Leakage Test 8

ADJUSTMENTS 9
- Rear Wheel Toe-In Adjustment 9
- Brake Adjustment 10

REPAIRS 11
- Steering Wheel Removal and Installation 11
- Rear Axle Bushing Service 12
- Steering Pivot Bushing Service 12
- Rear Wheel Spindle Bushing Service 14
- Front Wheel Bearing Service 15
- Rear Wheel Bearing Service 16
- Steering Cylinder Removal and Installation 18
- Steering Cylinder Service 19
- Brake Shoe Replacement 20
- Steering Valve Removal and Installation 21
- Steering Valve Service 22

Introduction

Power Steering

The power steering valve is enclosed in the steering tower at the front of the traction unit. As the steering wheel is turned, the steering valve meters hydraulic fluid to the double-acting steering cylinder on the rear axle and turns the wheels. Hydraulic fluid flow for power steering is supplied by the front section of auxiliary hydraulic pump. The steering section of the pump has a built-in relief valve.

The Model HGF Hydraguide™ steering valve (Fig. 1) is manufactured by TRW, Ross Gear Division.

NOTE: Because the steering cylinder has different displacements when extended and retracted, the steering wheel will not return to its original position after making a turn.

NOTE: The steering system will operate with the engine off if necessary (with increased effort).

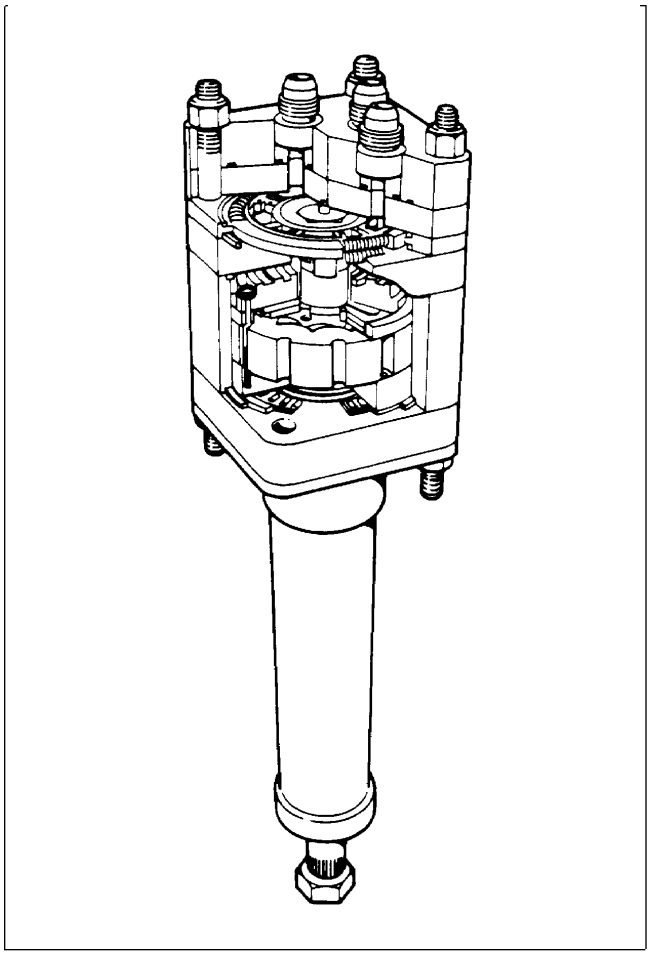

Figure 1

Brakes

The Reelmaster® 5100-D is equipped with 7 inch diameter x 1-3/4 inch wide mechanical drum brakes on the front wheels (Fig. 2).

Two pedals are used to control the brakes. When used separately, the pedals can control each wheel brake to assist steering or traction on side hills. The two pedals may be locked together with the brake lock arm. When the lock arm is engaged both wheels will brake equally and act as a service brake or parking brake.

The brake pedals operate the brakes through a cable system to a strut and lever on the brake shoes.

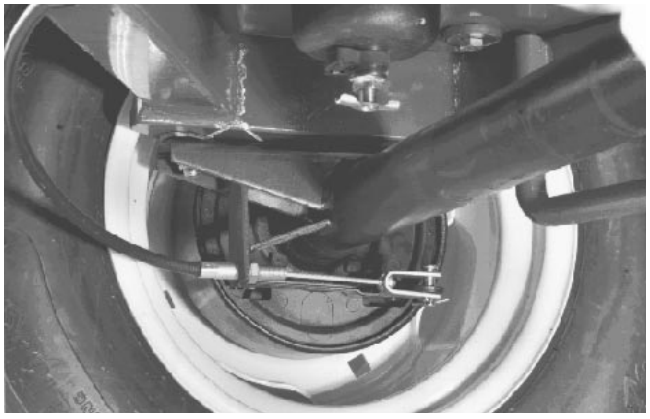

Figure 2

Power Steering Schematics

When the steering wheel is turned to the right (Fig. 3), the control valve within the steering valve shifts to close the “AUX” port. This directs oil supplied by the steering pump to the metering section of the steering valve. As the steering wheel is turned, system oil is metered out port “RT” to the steering cylinder. Oil displaced by the other end of the steering cylinder returns to the steering valve through port “LT” and is directed out port “OUT” back to reservoir.

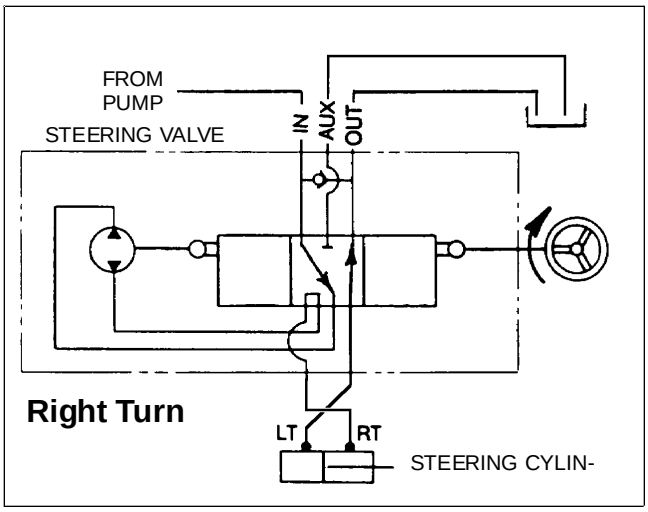

Figure 3

When the steering wheel is stationary, the control valve within the steering valve shifts back to neutral (Fig. 4), allowing system oil to flow through the steering valve and out the “AUX” port back to reservoir. Oil in the rest of the steering circuit is then trapped.

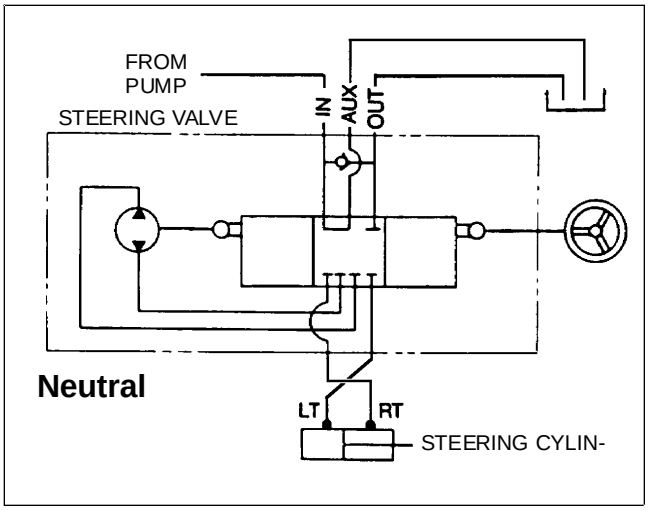

Figure 4

When the steering valve is turned to the left (Fig. 5) oil is metered out port “LT” to the steering cylinder. Oil displaced by the other end of the cylinder returns to the steering valve through port “RT” and is directed out port “OUT” back to reservoir.

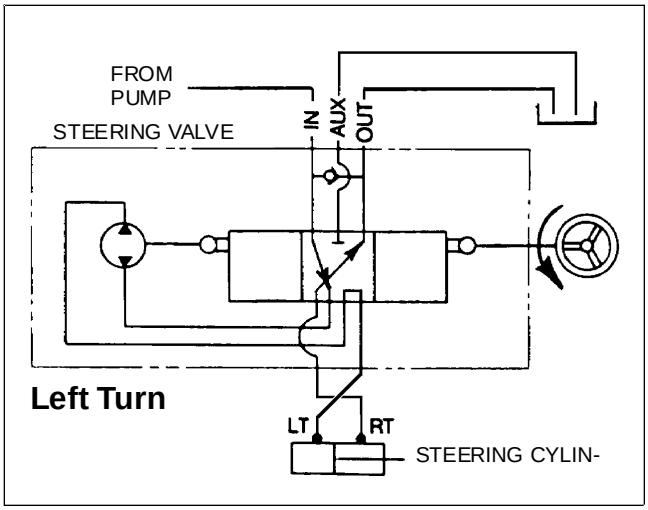

Figure 5

Specifications

Item	Specification
Front wheel lug nut torque	45 to 55 ft-lb
Rear wheel lug nut torque	30 to 35 ft-lb
Steering cylinder bolt torque	130 to 150 ft-lb
Rear wheel toe-in	0 to 1/8 in.
Tire pressure	10 to 15 psi, front and rear
Brake pedal free travel	1/2 to 1 in.

Special Tools

Steering Valve Service Fixture

To avoid distorting or damaging the steering valve when repairing, do not clamp it directly into a vise. Fabricate a service fixture (Fig. 6) and use it as instructed (See Steering Valve Service in the Repairs section of this chapter).

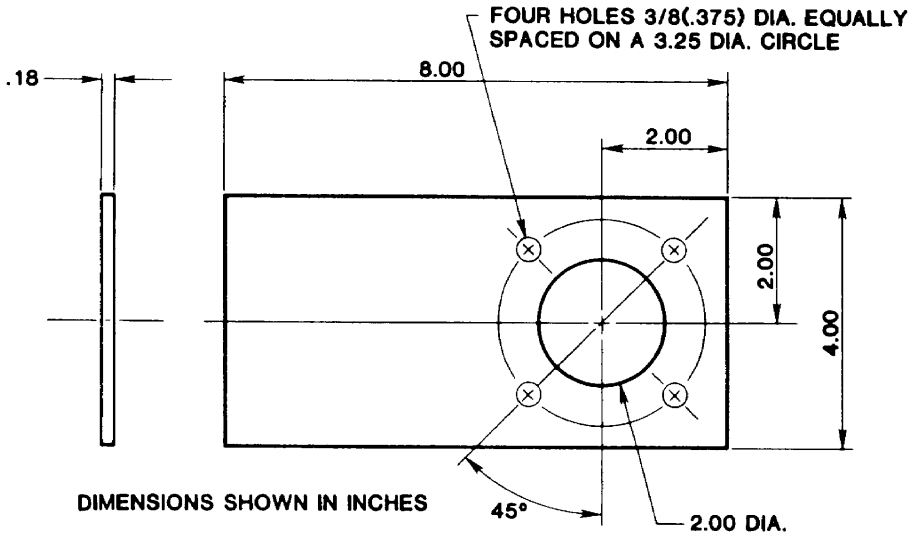

Figure 6

Troubleshooting

Problem	Possible Causes
Steering Wander	Tire pressure incorrect or unequal left to right. Loose or worn steering linkage. Improperly adjusted or worn rear wheel bearings. Rear wheels out of alignment; toe-in / toe-out. Internal leakage of steering cylinder.
Poor or No Returnability (Recovery)	Improper rear wheel alignment; toe-in. Steering linkage binding. Low tire pressure. Steering column binding or out of alignment.
Shimmy	Steering linkage loose, worn or out of adjustment. Wheel bearings out of adjustment. Air in hydraulic system. Internal leakage of steering cylinder.
High Steering Effort in One Direction	Low hydraulic system pressure. Excessive heat causing steering valve plate valve to stick (See Excessive Heat in this section).
High Steering Effort in Both Directions	Low hydraulic fluid level. Low flow or pressure from hydraulic pump. Steering linkage binding. Restriction in hydraulic return line.

Problem	Possible Causes
Steering Wheel Lash (Free Movement)	Steering wheel loose on column. Steering linkage loose or worn. Steering valve loose at mounting. Air in hydraulic system. Internal leakage in hydraulic cylinder.
Excessive Heat in Hydraulic System	Undersized replacement hose or tube line. Kinked or severely bent hose or tube line. Restricted oil cooler. Restricted recentering of steering valve control valve plate.

Steering Valve and Pump Tests

1. Make sure the hydraulic oil is at normal operating temperautre by operating the machine for approximately 5 minutes.

2. Engage the parking brakes, lower the cutting units to the floor and turn the engine OFF.

3. Remove the cover from the steering tower.

4. Place a drain pan under the steering valve. Disconnect the hydraulic hose at the AUX port of the steering valve (Fig. 7a).

5. Connect the inlet hose of the tester to the AUX port on the steering valve. Connect the outlet hose of the tester to hose that was disconnected in step 4.

IMPORTANT: Make sure that the oil flow indicator arrow on the flow gauge is showing that the oil will flow from the steering valve, through the tester and into the hose that was disconnected in step 4.

6. With the tester load valve fully open (counterclockwise) run the engine at full throttle.

Steering Valve Test (Control Valve Section)

7. Turn the steering wheel all the way in one direction and hold it against the right stop.

There should be no flow as the steering wheel is held against the right stop.

8. Release the steering wheel.

Flow should be approximately 3 gpm when the steering wheel is released. If flow does not return to approximately 3 gpm when the steering wheel is released the control valve within the steering valve may be sticking.

9. Repeat steps 7 and 8, turning the steering wheel in the opposite direction.

Steering Pump Flow and Relief Pressure Test

10. While watching the pressure gauges, slowly close flow control valve on tester untils 1000 PSI is obtained on gauge.

TESTER READING: Flow not less than 3.5 GPM at 1000 PSI.

11. If flow is lower than 3.5 GPM or a pressure of 1000 PSI cannot be obtained, check for restriction in pump intake line. Check relief valve in pump for contamination or wear. Adjust pump relief valve to 1250 PSI cracking pressure by removing cap and turning adjustment screw (Fig. 7b). If pump intake line is not restricted and relief valve is functioning properly, remove pump and repair or replace (see Pump Removal and Installation and Pump Repair in Mowing Circuit Repairs section of Chapter4 - Hydraulic system).

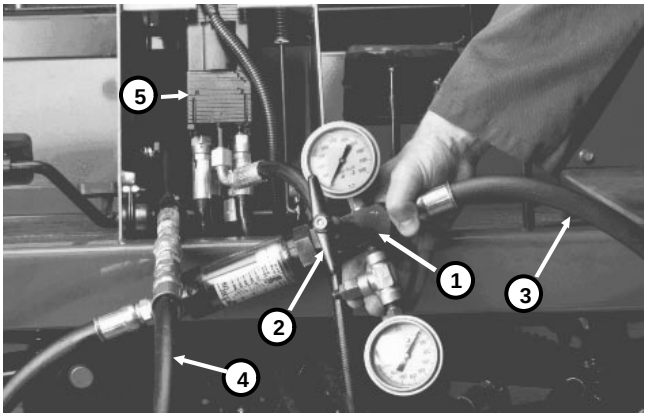

Figure 7a

1. Tester
2. Load valve
3. Inlet line to tester
4. Outlet line from tester
5. Steering valve

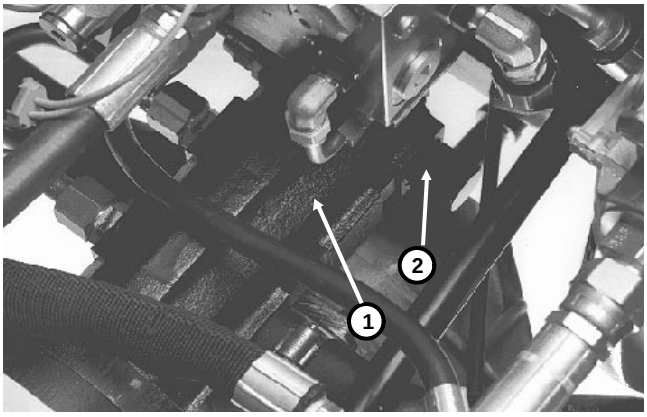

Figure 7b

1. Pump
2. Relief valve

Steering Cylinder Internal Leakage Test

1. Engage the parking brake, and lower the cutting units to the floor.

2. Turn the steering wheel all the way to the left (counterclockwise) so the steering cylinder rod is extended all the way.

3. Turn the engine OFF.

4. Disconnect the hydraulic hose from the fitting on the rod end of the cylinder (Fig. 8). Put a plug in the end of the hose to prevent contamination.

5. With the engine OFF, continue turning the steering wheel to the left (counterclockwise) with the cylinder rod completely extended and observe the open fitting on the steering cylinder. If oil comes out of the fitting while turning the steering wheel to the left, the steering cylinder has internal leakage and must be repaired or replaced.

NOTE: DO NOT turn the steering wheel to the right (clockwise) or the steering valve will meter oil out the disconnected hydraulic hose.

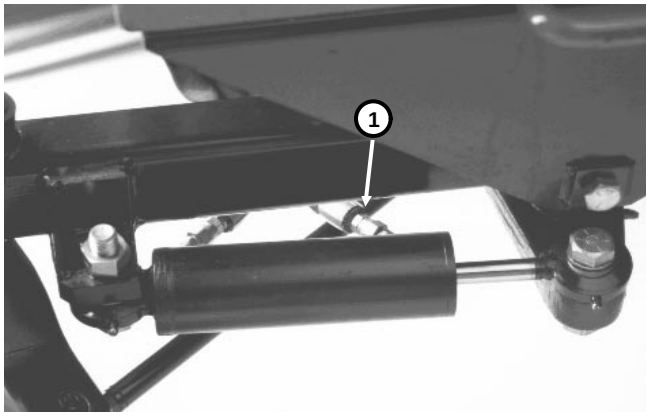

Figure 8

1. Hydraulic hose and fitting

Rear Wheel Toe-in Adjustment

The rear wheels should have 0 to 1/8 of an inch toe-in when they are pointed straight ahead. To check toe-in, measure the center-to-center distance, at axle height, in front and rear of steering tires. If toe-in is not within specifications, an adjustment is required.

1. Rotate the steering wheel so the rear wheels are straight ahead.

2. Loosen the jam nuts on both tie rods. Adjust both tie rods until center-to-center distance at front of rear wheels is 0 - 1/8 of an inch less than at the rear of the wheels (Fig. 9).

3. When toe-in is correct, tighten jam nuts against tie rods (Fig. 9).

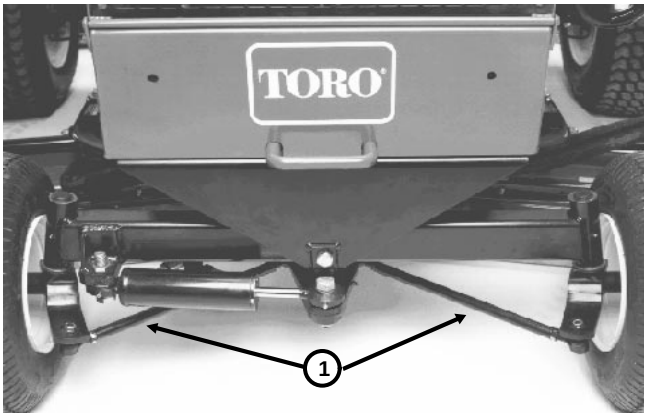

Figure 9

1. Tie rods

Brake Adjustment

Adjust the service brakes when there is more that one inch of “free travel” of the brake pedals. Free travel is the distance the brake pedal moves before braking resistance is felt (Fig. 11).

Adjust where brake cables connect to bottom of brake pedals. When cable is no longer adjustable, star nut on inside of the brake drum must be adjusted to move brake shoes outward. Brake pedals must be adjusted again after star nut is adjusted.

1. Disengage lock arm from left brake pedal so both pedals work independently of each other.

2. To reduce free travel of brake pedals:

   A. Loosen front nut on threaded end of brake cable (Fig. 12).

   B. Tighten rear nut to move cable toward the rear until brake pedals have 1/2 to 1 in. of free travel.

   C. Tighten front nut after adjusting.

3. When brake cables cannot be adjusted to get free travel within 1/2 to 1 in., star nut inside brake drum must be adjusted. Before adjusting the star nut, loosen brake cable nuts to prevent unnecessary strain on the cables.

4. Loosen (do not remove) the five (5) wheel lug nuts.

5. Jack up machine until front wheel is off the floor. Use jack stands or block machine to prevent it from falling accidentally.

6. Remove wheel nuts and slide wheel off the studs. Rotate the brake drum until adjusting slot is at the top and centered over star-nut (Fig. 13).

7. Use a brake adjusting tool or a screwdriver to rotate star nut until brake drum locks because of outward pressure of brake shoes (Fig. 14).

8. Loosen star nut approximately 12 to 15 notches or until brake drum rotates freely.

9. Install wheel onto studs with five (5) wheel nuts. Tighten the wheel lug nuts.

10. Remove jack stands or blocking and lower machine to floor. Tighten wheel lug nuts to a torque of 45 to 55 ft-lb.

11. Adjust brake cables (see step 2 of this procedure).



Figure 11

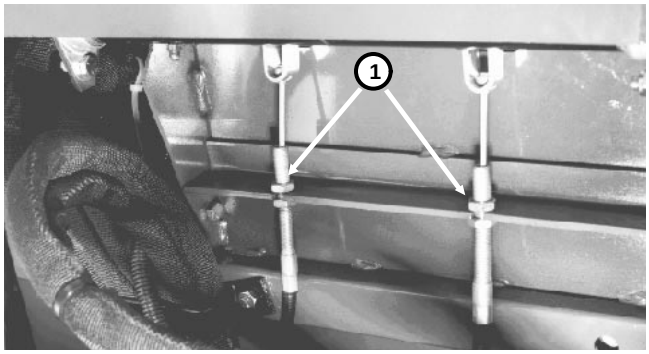

Figure 12

1. Jam nuts

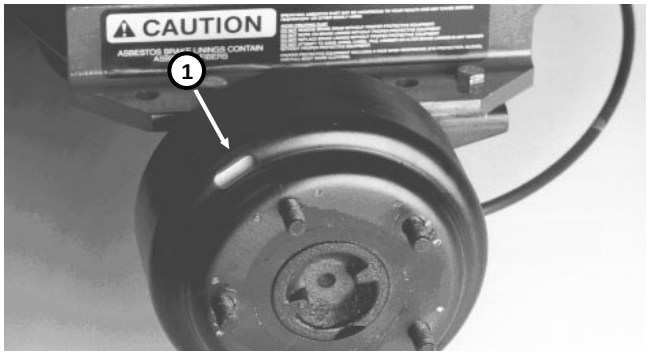

Figure 13

1. Brake adjusting slot

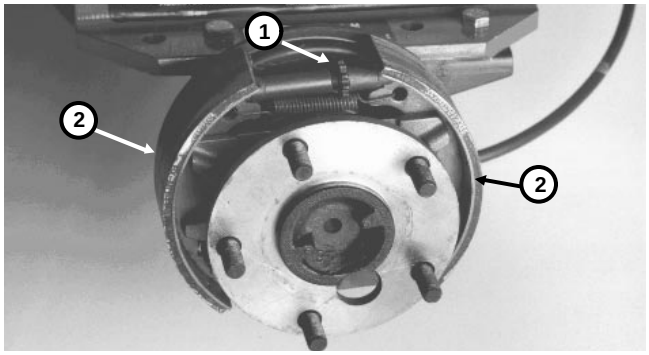

Figure 14

1. Star nut **2. Brake shoe**

Steering Wheel Removal and Installation

Removing the Steering Wheel

Remove the cover from the steering wheel hub. Remove the locknut that secures the steering wheel to the shaft (Fig. 15). Pull the steering wheel off the shaft.

NOTE: It may be necessary to use a jaw-type puller to remove the steering wheel from the steering shaft.

IMPORTANT: DO NOT hit the steering shaft with a hammer. This could damage the steering valve components.

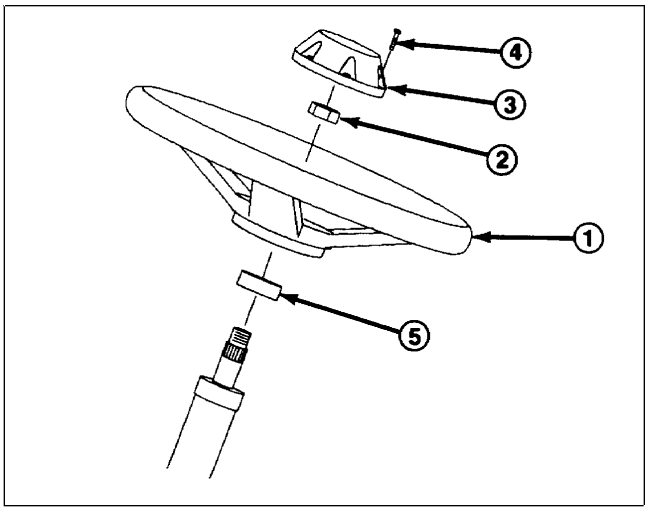

Figure 15

1. Steering wheel
2. Jam nut
3. Cap
4. Screw
5. Foam seal

Installing the Steering Wheel

1. Use the steering wheel to put the rear wheels in the straight ahead position.

2. Slide the steering wheel onto the steering shaft.

3. Secure the steering wheel in place with the jam nut (Fig. 10). Tighten the nut to 10 to 15 ft-lb.

4. Install cap to steering wheel with screw.

Rear Axle Bushing Service

The rear axle must be held in place snugly by the axle pin. Excessive movement of the axle, which is characterized by erratic steering, usually indicates worn bushings. To correct the problem, replace the bushings.

1. Disconnect the hydraulic hoses from the steering cylinder. Put caps or plugs on all the fittings and hoses to prevent contamination.

NOTE: To ease reassembly, tag each of the hoses to show their correct position on the steering cylinder.

2. Remove the cap screw securing the end of the axle pin to the chassis (Fig. 16).

3. Jack up the frame (just ahead of the rear wheels) until pressure is taken off the axle pin. Support the machine with jack stands to prevent it from falling.

4. Pull the axle pin out. This will release the rear axle and washer(s) from the frame. Carefully pull the entire axle and wheel assembly out from under the machine.

NOTE: Several washers may have been installed between the axle pivot tube and frame during manufacture. Make sure the same number of washers are installed during reassembly.

5. Use a drift punch and hammer to drive both bushings out of the axle. Clean the inside of the axle pivot tube to remove dirt and foreign material.

6. Apply grease to the inside and outside of the new bushing. Use an arbor press to install the bushings into the top and bottom of the axle pivot tube. Bushings must be flush with the axle tube.

7. Wipe the rear axle pin with a rag to remove dirt and grease. Inspect the pin for wear or damage and replace as necessary.

8. Mount the axle to the frame with the axle pin. The washer(s) must be positioned between the rear end of the pivot tube and the frame (see the NOTE after step 3). Secure the axle pin in place with the cap screw.

9. Remove the jackstands and lower the machine to the floor.

10. Install the hydraulic hoses to the steering cylinder.

11. Lubricate the rear axle bushings through the grease fitting on the rear axle.

Steering Pivot Bushing Service

The steering pivot must fit snugly onto the mounting pin. Excessive movement of the steering pivot may indicate worn bushings or tie rod ball joints.

1. Remove the lock nut and cap screw securing the steering cylinder rod end to the steering pivot (Fig. 16).

2. Remove two (2) nuts to disconnect the tie rod end from the spindle arm. Inspect all tie rod end ball joints for wear or damage and replace as necessary.

3. Remove the retaining ring and thrust washer. Slide the steering pivot off of the mounting pin on the bottom of the axle.

4. Use a drift punch and hammer to drive both bushings out of the steering pivot. Clean the inside of the steering pivot to remove dirt and foreign material. Also clean the mounting pin on the bottom of the rear axle.

5. Apply grease to the inside and outside of the new bushings. Use an arbor press to install the bushings into the top and bottom of the steering pivot tube. Bushings must be flush with the end of the tube.

6. Slide the steering pivot onto the mounting pin. Secure the plate in place with the thrust washer and retaining ring.

7. Connect the tie rod end to the spindle bracket with one (1) nut. Tighten the nut to a torque of 25 - 33 ft-lb. Install the jam nut and tighten against the other nut to secure tie rod end.

8. Install the lock nut and cap screw to secure the steering cylinder rod end to the steering pivot. Tighten the nut to 130 to 150 ft-lb.

9. Lubricate the bushings through the grease fitting on the steering pivot.

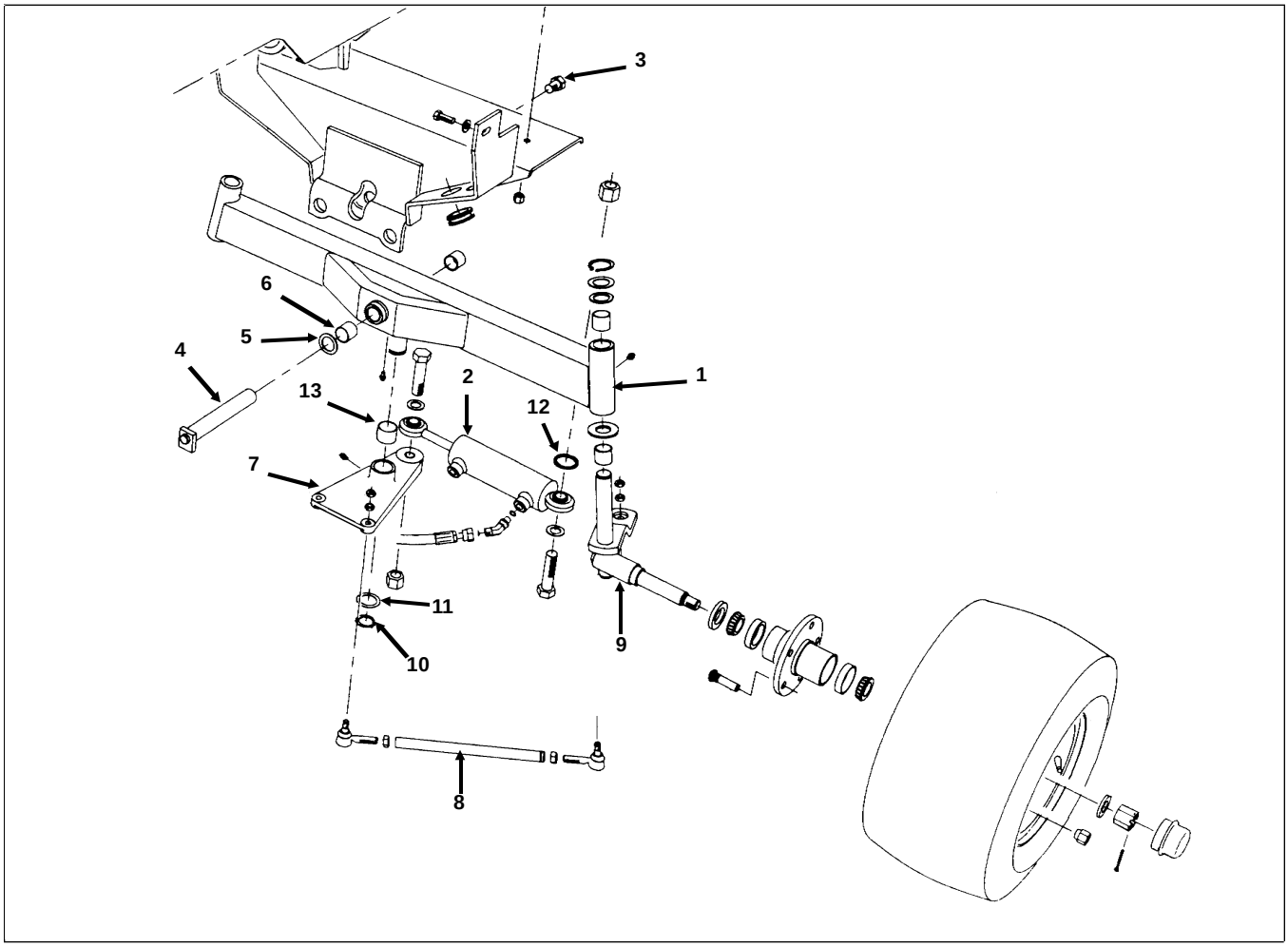

Figure 16

1. Rear axle
2. Steering cylinder
3. Lock nut
4. Rear axle pin
5. Washer
6. Axle bushings
7. Steering pivot
8. Tie rod
9. Wheel spindle
10. Snap ring
11. Washer
12. Cylinder spacer
13. Steering pivot bushings

Rear Wheel Spindle Bushing Service

The rear wheel spindles must fit snugly in the rear axle. Excessive movement of the spindle in the axle indicates that the bushings are probably worn and must be replaced.

1. Disconnect the hydraulic hoses from the steering cylinder. Put caps or plugs on the fittings and hoses to prevent contamination.

NOTE: To ease reassembly, tag each of the hoses to show their correct position on the steering cylinder.

2. Remove the cap screw securing the end of the axle pin to the chassis (Fig. 17).

3. Jack up the frame (just ahead of the rear wheels) until pressure is taken off the axle pin. Support the machine with jackstands to prevent it from falling. Pull the axle pin out to release the rear axle and washer(s) from the frame.

NOTE: Several washers may have been installed between the axle pivot tube and frame during manufacture. Make sure the same number of washers are installed during reassembly.

4. Carefully roll the entire rear axle and wheel assembly out from under the machine.

5. Remove two (2) nuts to disconnect the tie rod end from the spindle arm.

6. Remove the snap ring and washers that secure the wheel spindle into the axle tube. Slide the spindle and wheel assembly out of the axle tube to expose the bushings.

7. Use a punch and hammer to drive both bushings out of the axle tube. Clean the inside of the axle tube to remove any dirt and foreign material.

8. Apply grease to the inside and outside of the new bushings. Use an arbor press to install the bushings into the top and bottom of the axle tube. The bushings must be flush with the axle tube.

9. Wipe the spindle shaft with a rag to remove any dirt and grease. Inspect the spindles for wear and replace as necessary.

10. Install a washer onto the spindle shaft and push the shaft through the axle tube. Hold the wheel and spindle shaft assembly in place and install the washer flat washer and snap ring onto the end of the spindle shaft.

11. Connect the tie rod end to the spindle bracket with one (1) nut. Tighten the nut to a torque of 25 - 33 ft-lb. Install the jam nut and tighten against the other nut to secure tie rod end.

12. Mount the axle to the frame with the axle pin. The washer(s) must be positioned the between the front end of the pivot tube and the frame (see the NOTE after step 3). Secure the axle pin in place with the cap screw.

13. Remove the jackstands and lower the machine to the shop floor.

14. Install the hydraulic hoses to the steering cylinder.

15. Lubricate the steering spindle and rear axle pivot.

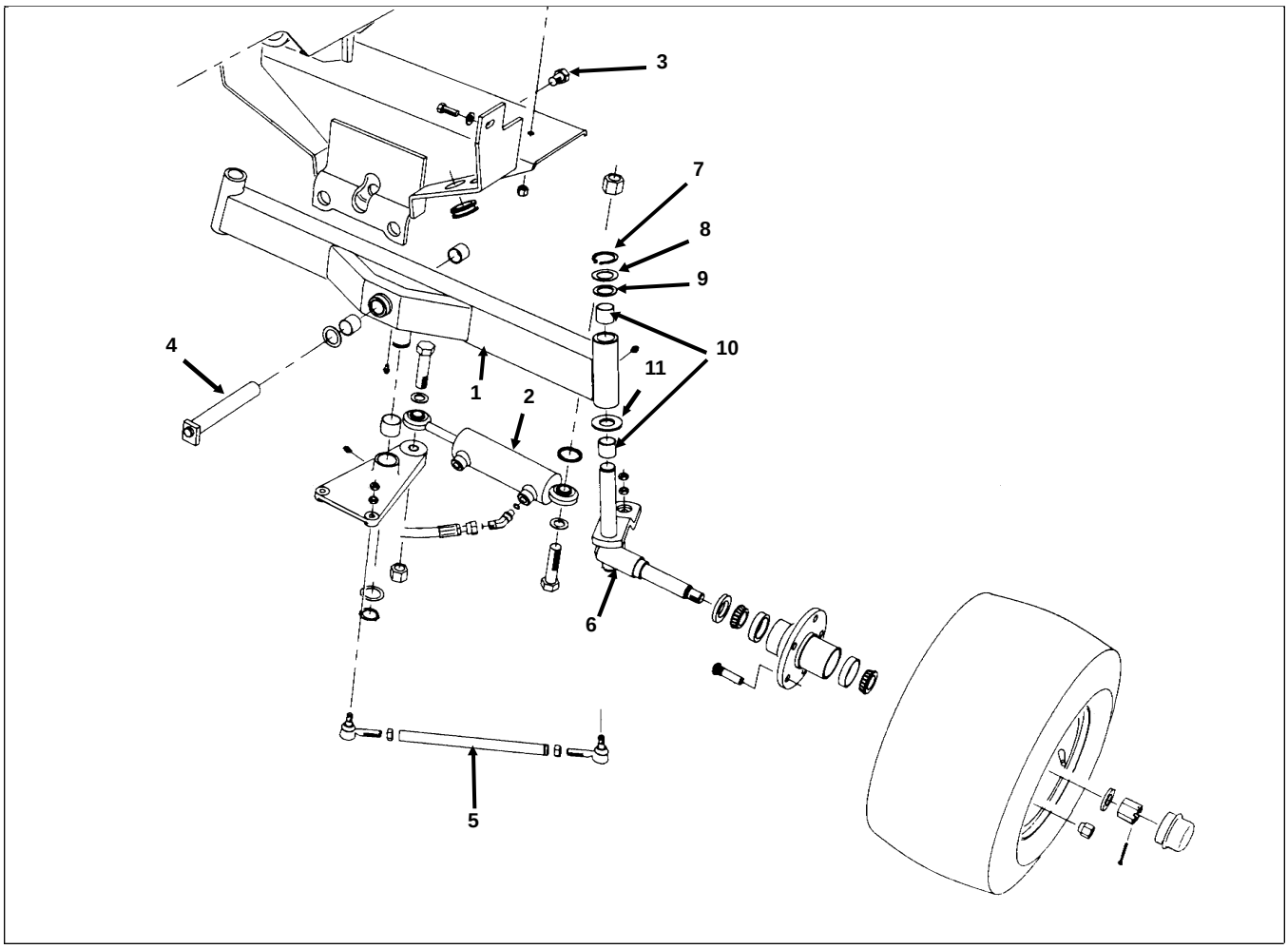

Figure 17

1. Rear axle
2. Steering cylinder
3. Capscrew
4. Rear axle pin
5. Tie rod
6. Wheel spindle
7. Snap ring
8. Shim washer
9. Thrust washer
10. Bushing
11. Thrust washer

Front Wheel Bearing Service

See Axle Shaft Disassembly and Wheel Bearing Service in the Repairs section of Chapter 6 - Differential.

Rear Wheel Bearing Service

Disassemble, clean, repack and adjust the rear wheel bearings after each 500 hours of operation or once a year. Use No. 2 general purpose lithium base grease containing E.P. additive. If operating conditions are extremely dusty and dirty, it may be necessary to perform this maintenance more often.

1. Jack up the rear of the machine until the tire is off the floor. Support the machine with jack stands or blocks to prevent it from falling.

2. Remove the dust cap from the end of the wheel spindle (Fig. 18).

3. Remove the cotter pin, slotted nut, and washer. Slide the wheel off spindle shaft.

4. Pull the seal out of the wheel hub.

5. Remove the bearings from both sides of the wheel hub. Clean the bearings in solvent. Make sure the bearings are in good operating condition. Clean the inside of the wheel hub. Check the bearing cups for wear, pitting or other noticeable damage. Replace worn or damaged parts.

6. If bearing cups were removed from the wheel hub, press them into the hub until they seat against the shoulder.

7. Pack both bearings with grease. Install one bearing into the cup on inboard side of the wheel hub. Lubricate the inside of the new lip seal and press it into the wheel hub.

IMPORTANT: The lip seal must be pressed in so it is flush with the end of the hub. The lip of the seal must be toward the bearing.

8. Pack inside of wheel hub with some grease (not full). Install remaining bearing into the bearing cup.

9. Slide the wheel onto the spindle shaft and secure it in place with the flat washer and slotted nut. DO NOT tighten the nut or install the cotter pin.

10. Adjust preload on the wheel bearings.

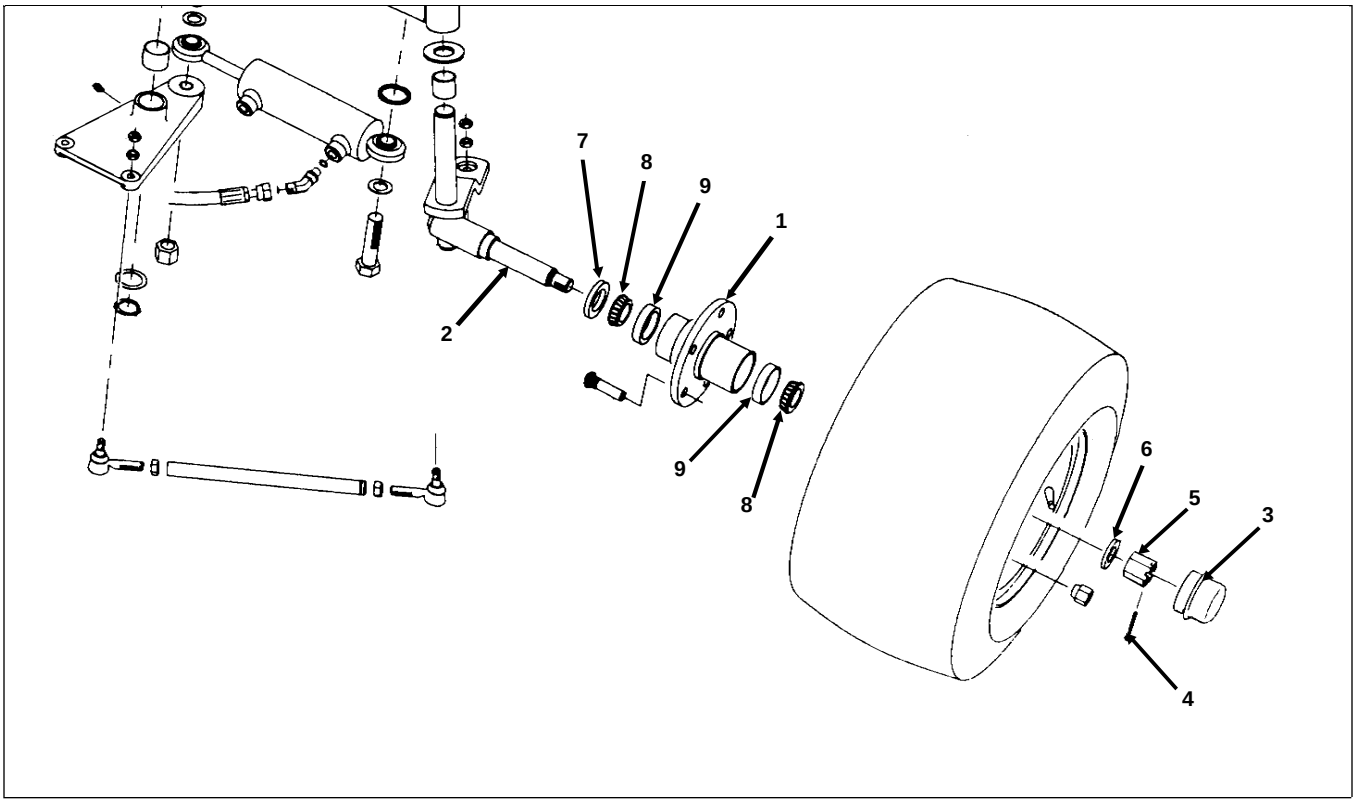

Figure 18

1. Wheel hub
2. Wheel spindle
3. Dust cap
4. Cotter pin
5. Slotted nut
6. Washer
7. Seal
8. Bearing cone
9. Bearing cup

Adjusting Rear Wheel Bearings

1. Remove dust cap from end of wheel spindle. Also remove cotter pin retaining slotted nut in place (Fig. 18).

2. Rotate the wheel by hand and tighten the slotted nut (Fig. 19) until the bearing binds SLIGHTLY. Then, loosen the nut until the nearest slot and hole in the spindle line up. Reinstall the cotter pin to retain the slotted nut in place. NOTE: The correct end play of the adjusted assembly is .002 -. 005 inches.

3. Remove jack stands or blocks and lower machine to floor.

4. Put a coating of grease on the inside of the dust cap. Install dust cap on the end of the wheel spindle (Fig. 18).

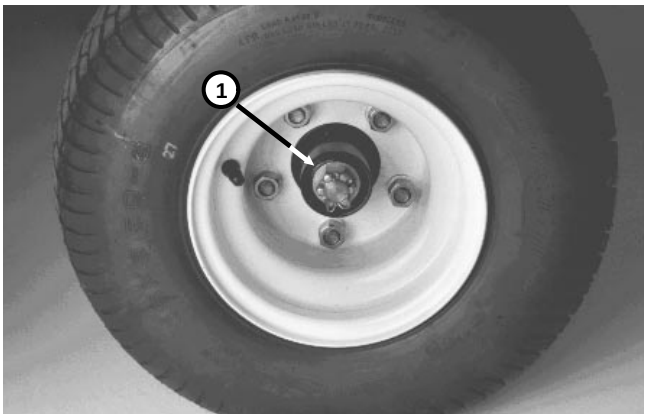

Figure 19

1. Cotter pin and slotted nut

Steering Cylinder Removal and Installation

1. Engage the parking brakes, lower the cutting units to the ground, turn the engine OFF and remove the key from the ignition switch.

2. Disconnect the hydraulic hoses from the steering cylinder. Put caps or plugs on all the fittings and hoses to prevent contamination.

NOTE: To ease reassembly, tag each of the hoses to show their correct position on the steering cylinder.

3. Remove the lock nut and cap screw securing the rod end of the cylinder to the steering pivot (Fig. 20).

4. Remove the lock nut, cap screw and spacer securing the barrel end of the cylinder to the rear axle.

5. Remove the cylinder.

6. Reverse steps 2 - 5 to install the steering cylinder. Tighten the cap screw and nut securing the rod end of the cylinder to the steering pivot to 130 - 150 ft-lb.

7. After installing the cylinder, bleed the hydraulic system. (See Bleeding the Hydraulic System in the Repairs section of Chapter 4 - Hydraulic System.)

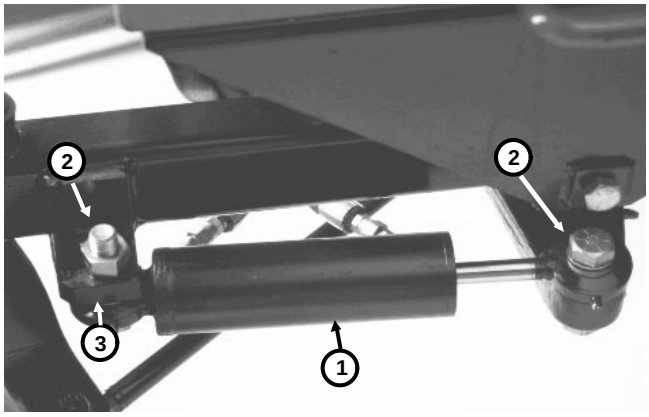

Figure 20

1. Steering cylinder
2. Lock nut and cap screw
3. Cylinder spacer

Steering Cylinder Service

IMPORTANT: To prevent damage to rod or barrel, clamp vise on pivot ends only. DO NOT clamp against smooth rod surface.

1. After removing the cylinder, pump oil out of cylinder into a drain pan by SLOWLY moving piston in and out of cylinder bore.

2. Plug the ports and clean the outside of the cylinder.

3. Mount cylinder in a vise so rod end of cylinder is tilted up slightly. Do not close the vise so firmly that the cylinder barrel could become distorted.

4. Use a spanner wrench to unscrew (counterclockwise) head from barrel (Fig. 21).

5. Grasp large end of piston rod and use a twisting and pulling motion to carefully extract piston, rod, and head from cylinder tube.

6. Securely mount piston, rod, and head into vise so large nut is easily accessible for removal. Remove nut by turning it counterclockwise.

7. Remove piston. Slide head off of piston rod.

8. Remove all seals and O-rings.

9. Wash parts in a safe solvent. Dry parts with compressed air. DO NOT wipe them dry with a cloth or paper as lint and dirt may remain.

10. Carefully inspect internal surface of barrel for damage (deep scratches, out-of-round, etc.). Replace entire cylinder if barrel is damaged. Inspect head, rod, and piston for evidence of excessive scoring, pitting, or wear. Replace any damaged parts.

11. Put a light coating of oil on all new seals, and O-rings. Install new seals and O-rings.

12. Install head onto piston rod.

13. Install piston onto rod and tighten hex nut to 30 - 34 ft-lb.

14. Put a light coating of oil on all cylinder parts.

15. Slide piston rod assembly into cylinder tube.

16. Install head into tube and tighten by hand to properly engage threads. Tighten head with a spanner wrench.

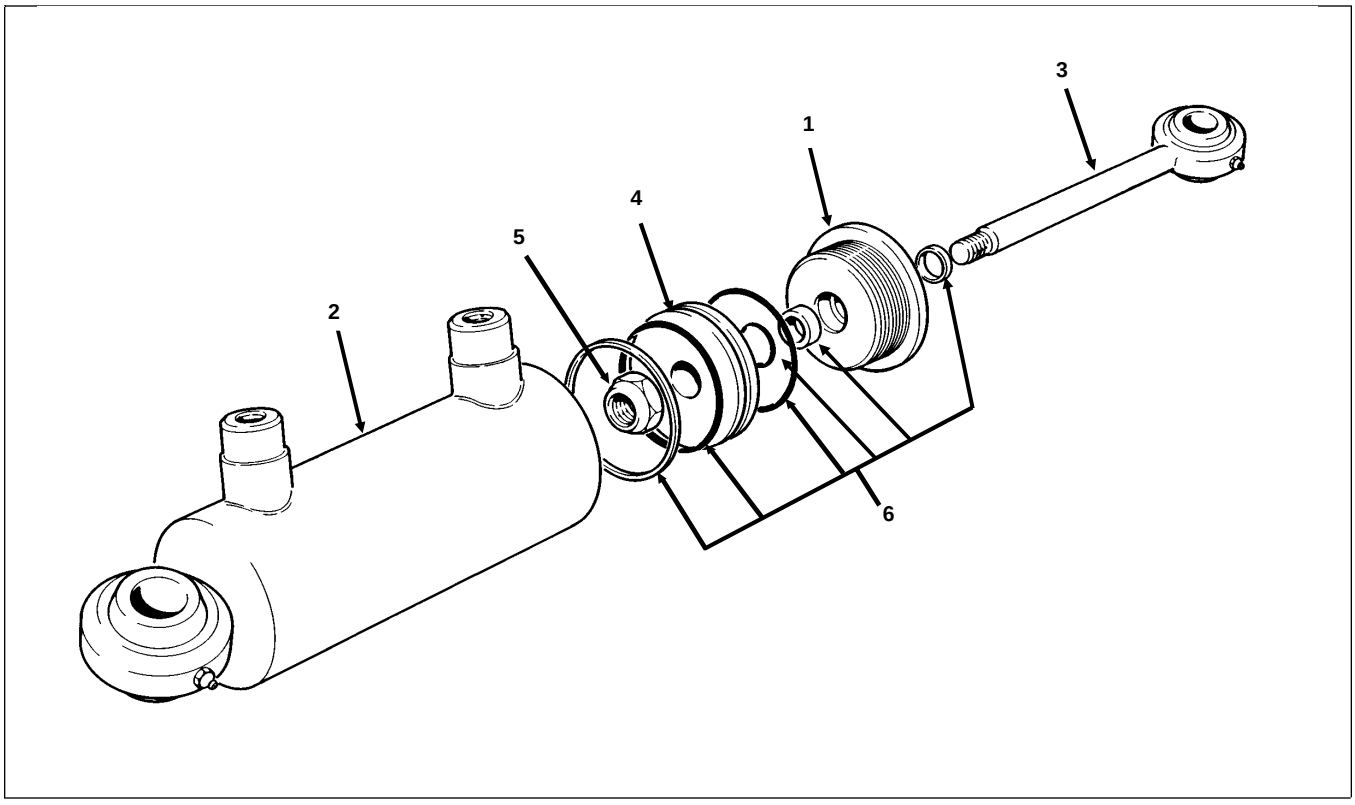

Figure 21

1. Head
2. Cylinder barrel
3. Piston rod
4. Piston
5. Lock Nut
6. Seals

Brake Shoe Replacement

CAUTION

The brake linings contain asbestos fibers. Breathing dust containing asbestos fibers may be hazardous to your health and may cause serious respiratory or other bodily harm. When servicing wheel brake parts, do not create dust by grinding, sanding or filing brake linings or by cleaning wheel brake parts with a dry brush or compressed air. (Use a water dampened cloth.) Use proper protective equipment when working with asbestos materials.

1. Loosen wheel lug nuts. Jack up machine until front wheel is off of floor. Use jackstands to prevent machine from falling accidentally. Remove wheel lug nuts and slide wheel and tire assembly off of studs.

2. Remove brake drum. If drum will not come off easily, brake shoes may have to be retracted with star nut (see Brake Adjustment).

3. Remove brake shoe return spring (Fig. 22) by prying the end of the spring up and over its retaining boss. Use a brake spring pliers or flat blade screwdriver.

CAUTION

Wear a face shield when removing brake return spring (Fig. 22). The spring is under tension and could possibly slip during removal.

4. Remove brake lever retainers (cotter pins) with a slip joint pliers.

5. Pull strut and lever from brake shoes. Remove brake shoes by sliding them both on one motion straight down off cast-iron spider.

6. Remove adjusting screw spring and star wheel assembly.

7. Install new brake shoes (reverse steps 2 - 7) Install new brake drum if it is severely scored.

8. Install wheel and tire assembly on studs with five (5) wheel nuts. Tighten wheel lug nuts. Remove jack stands or blocking and lower machine to the floor. Tighten wheel lug nuts to a torque of 45 - 55 ft-lb.

9. Adjust brakes (see Brake Adjustment).

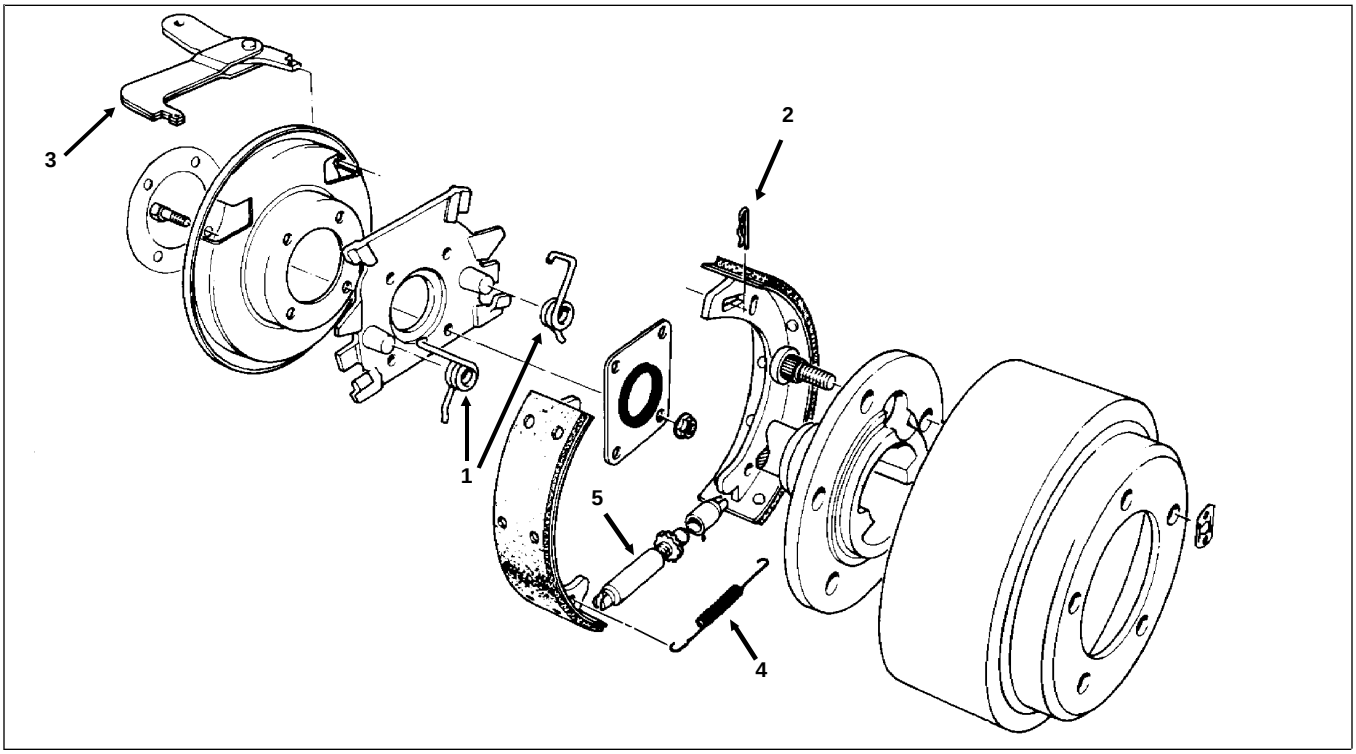

Figure 22

1. Return spring
2. Cotter pins
3. Strut and lever
4. Adjusting screw spring
5. Star wheel assembly

Steering Valve Removal and Installation

1. Engage the parking brakes, lower the cutting units to the ground, turn the engine OFF and remove the key from the ignition switch.

2. Remove the front center cutting unit (see Repairs section of Chapter 8 - Cutting Units).

3. Remove cap screws from steering tower cover and remove the cover from steering tower.

4. Clean outside of the steering valve and the area around the hydraulic fittings. Disconnect hydraulic hoses from steering valve (Fig. 23). Put caps or plugs on all fittings and hoses to prevent contamination.

NOTE: To ease reassembly, tag each hose and tube line to show their correct position on the steering valve.

5. Remove the steering wheel.

6. Remove the clamp securing the steering column to the steering tower.

7. Remove four (4) nuts and washers securing steering valve to steering tower.

8. Carefully move hydraulic lines to the side and pull steering valve and column out through bottom of steering tower.

9. Reverse steps 2 - 8 to install the steering valve.

10. After installing the steering valve, bleed the hydraulic system (see Chapter 4 - Hydraulic System).

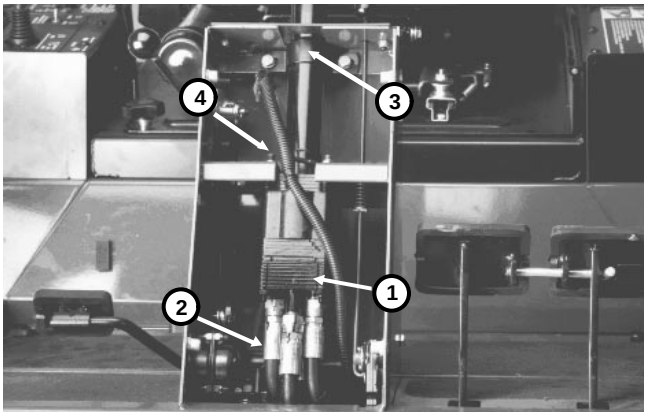

Figure 23

1. Steering valve
2. Hydraulic lines
3. Clamp
4. Nuts and washers

Steering Valve Service

Before Disassembly

When disassembling any of the parts, use a clean work bench. Wash all parts in solvent and dry them with compressed air. DO NOT wipe them dry with a cloth of paper as lint and dirt may remain. Keep each part separate to prevent nicks and burrs.

Components of the steering valve are stacked on four bolts and held in alignment with alignment pins. The alignment pins are designed to be a slip fit into the components. Use the minimum force necessary and maximum care when separating or assembling the components.

The steering valve has several components that are of brazed laminate construction. These components have plates and parts bonded together permanently to form an integral component that cannot be disassembled. Disassemble the steering valve only to the extent shown in this book.

IMPORTANT: Do not force or abuse closely fitted parts, or you may damage them.

Components of the steering valve with alignment grooves, must be assembled so that their alignment grooves are positioned as illustrated for the valve to function correctly (Fig. 24).

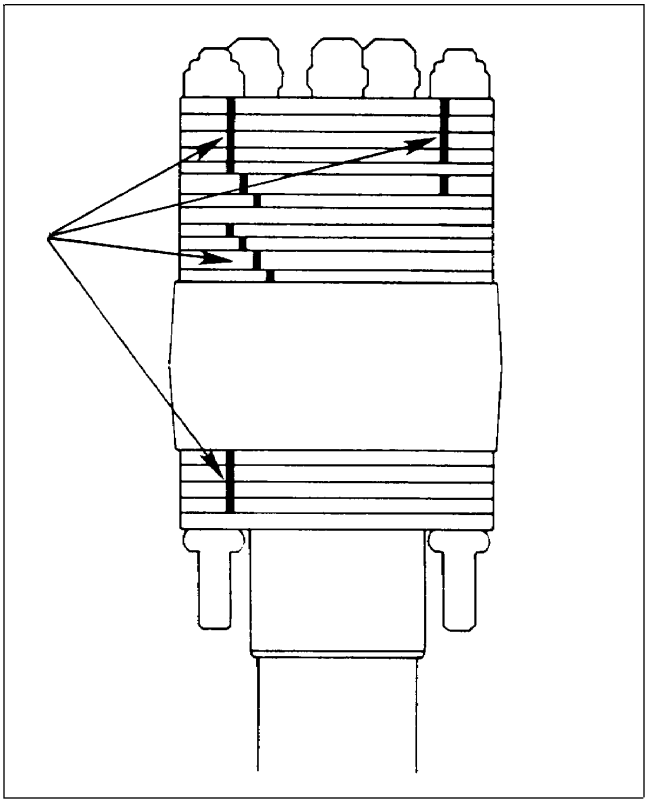

Figure 24

Disassembly of Steering Valve

1. To avoid distorting or damaging the steering valve, do not clamp it directly into a vise. Clamp a service assembly fixture securely in a vise (Fig. 25). Put the steering valve, input shaft first, into the service assembly fixture. Attache the steering valve to the fixture with four (4) 5/16-24 UNF nuts (Fig. 26).

NOTE: Before beginning the disassembly of the steering valve, study the relative positions of the alignment grooves on the side of the components in the assembly. The relative alignment groove positions on the components must be maintained at reassembly (Fig. 24).

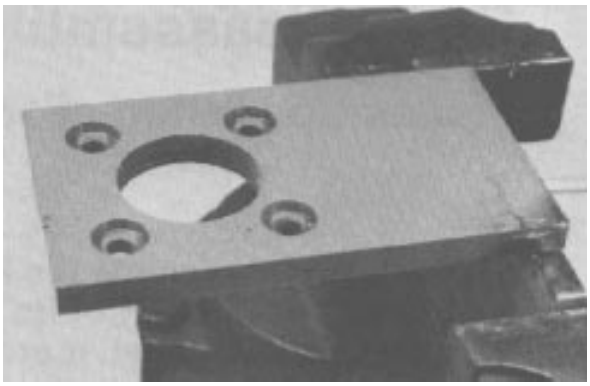

Figure 25

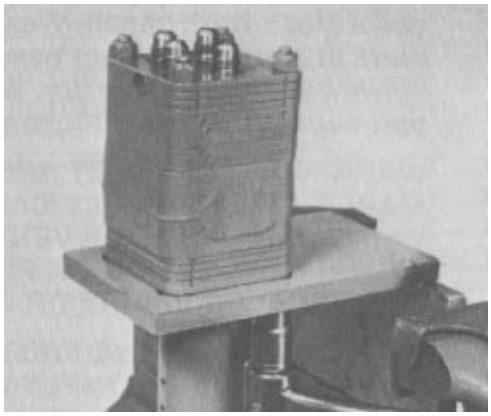

Figure 26

2. Use a slot type screwdriver or screwdriver socket to loosen the plug assembly one turn counterclockwise. (Fig. 27). Do not remove the plug assembly.

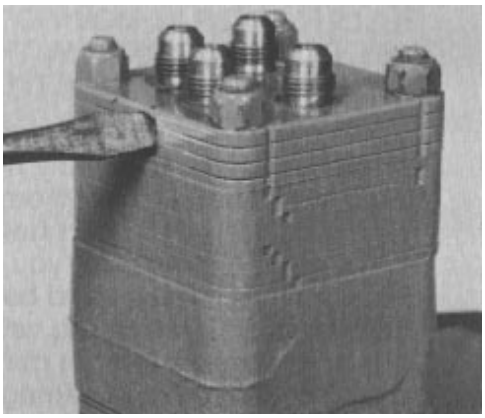

Figure 27

3. Remove the four nuts from the port cover assembly. Be careful not to damage the ports (Fig. 28).

IMPORTANT: The nuts are a special self-locking type. Do not substitute any other type.

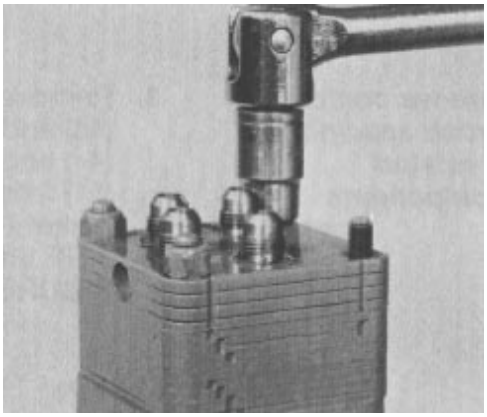

Figure 28

4. Grasp the port cover assembly (four plates bonded together) and lift it from the unit. Remove and discard the four o-rings and seal ring (Fig. 29).

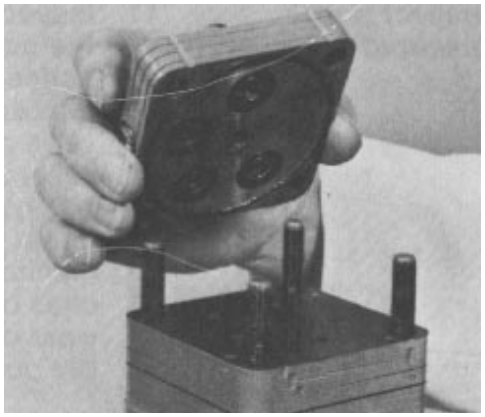

Figure 29

5. Remove the loosened plug and o-ring assembly from the port cover. Be ready to catch the steel check ball as it falls from its cavity (Fig. 30). Discard the o-ring.

6. Inspect the port cover for port fitting sealing surface scratches and thread damage. Replace the port cover if it is damaged.

NOTE: Be prepared to catch three springs which may become disengaged when removing the port manifold.

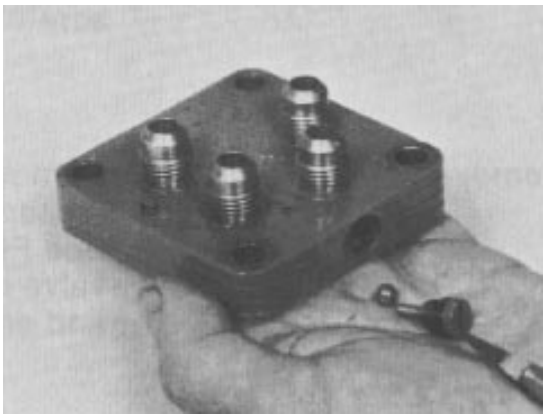

Figure 30

7. Carefully lift the port manifold (3 plates bonded together) from the unit (Fig. 31).

8. Remove the three springs from the port manifold.

NOTE: The unit has two different length spring sets. The set you have just removed from the port manifold are 3/4 in. (19 mm) long. Keep this set of three springs separate from the next set of three springs to be removed.

9. Inspect the springs for bent or distorted coils. If a spring is broken or deformed, all six springs in the unit should be replaced.

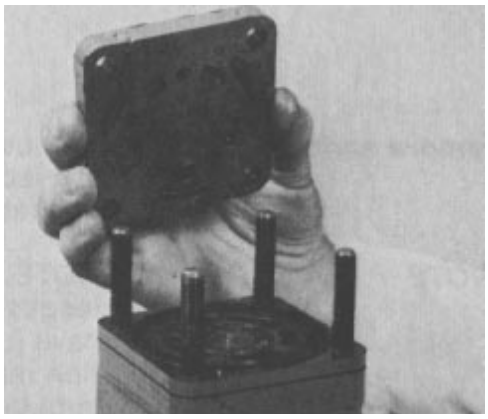

Figure 31

10. Inspect the ground surfaces of the port manifold. You should notice a “normal” polished pattern due to the rotation of the valve plate and hex drive assembly. All edges should be sharp and free of nicks and burrs. The surfaces of the port manifold should be free of scratches or scoring.

NOTE: Scoring is indicated by fine scratches or grooves. If these scratches can be detected by feel, finger nail, or lead pencil, the manifold should be replaced.

IMPORTANT: Many components in the unit have finely ground surfaces. Be careful not nick or scratch these surfaces.

11. Remove the valve ring (Fig. 32). Remove and discard the two seal rings (Fig. 33). The valve ring should be free of nicks and scoring.

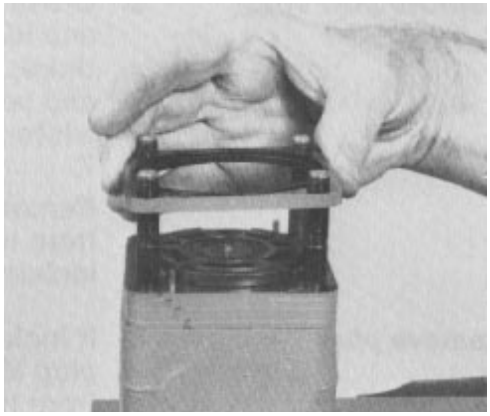

Figure 32

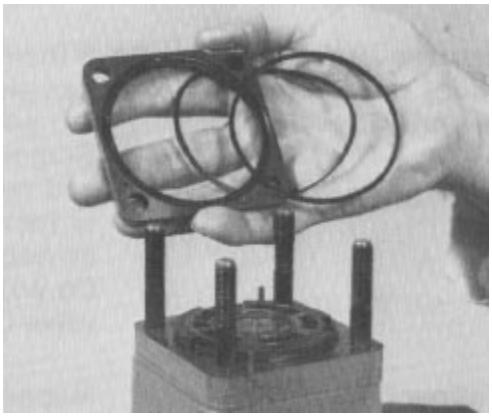

Figure 33

12. Remove the valve plate by lifting it from the isolation manifold (Fig. 34).

13. Inspect the slot edges and ground surfaces. If the valve plate shows nicks or scoring or the edges are not sharp, it must be replaced.

NOTE: The valve ring and valve plate are a matched set and must be replaced as a set.

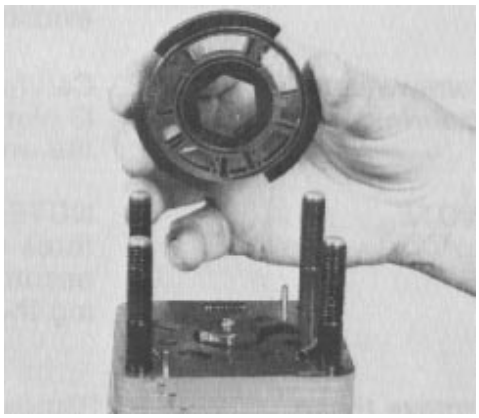

Figure 34

14. Remove three springs from the isolation manifold pockets (Fig. 35).

NOTE: The unit has two different length spring sets. the set you have just removed from the isolation manifold is 1/2 in. (13 mm) long. Keep this spring set separate from the set removed from the port manifold.

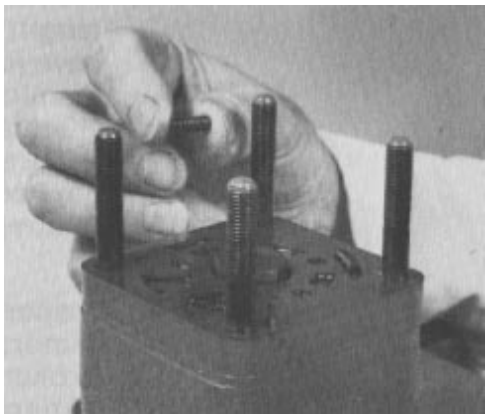

Figure 35

15. Inspect the springs for bent or distorted coils. If a spring is broken or deformed, all six springs in the unit must be replaced (Fig. 36).

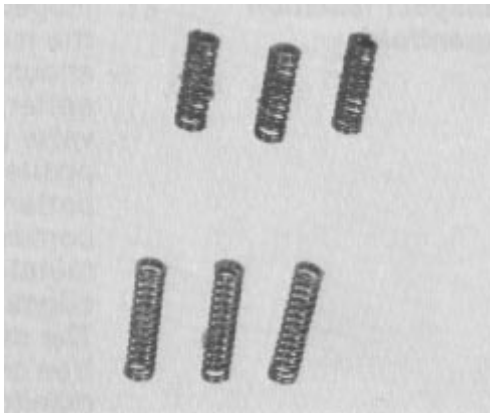

Figure 36

16. Remove the hex drive assembly from the drive link (Fig. 37).

17. The pin in the hex drive assembly should not show wear and must be firmly pressed in place. the sides of the hex and slot should not have grooves or scoring. if the hex drive assembly shows signs of this type of wear, it must be replaced.

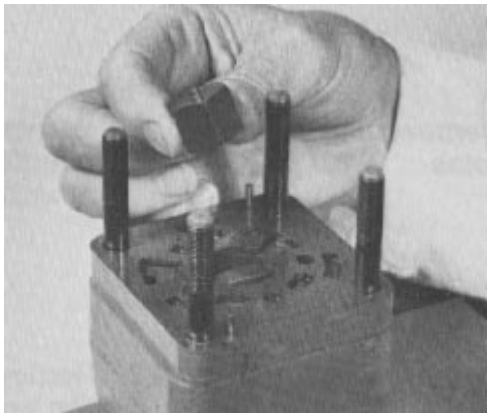

Figure 37

18. Remove the two alignment pins that align the port manifold, valve ring and isolation manifold (Fig. 38).

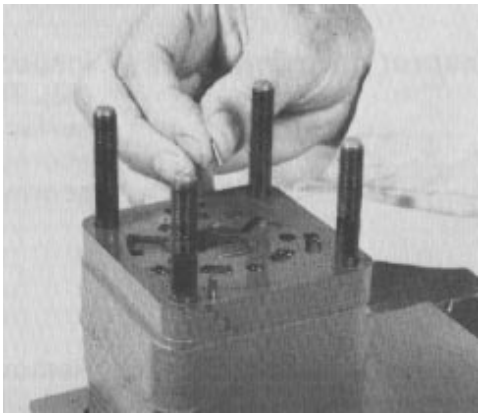

Figure 38

19. Remove the isolation manifold (four plates bonded together) (Fig. 39).

20. Inspect the ground surfaces of the isolation manifold. You should notice a “normal” polished pattern due to the rotation of the valve plate, and on the opposite side a “normal” polished pattern due to the action of the commutator cover and commutator seal. The holes and edges should be free of nicks. The manifold surfaces should be free of nicks or scoring. If the manifold has developed any of these conditions, it must be replaced.

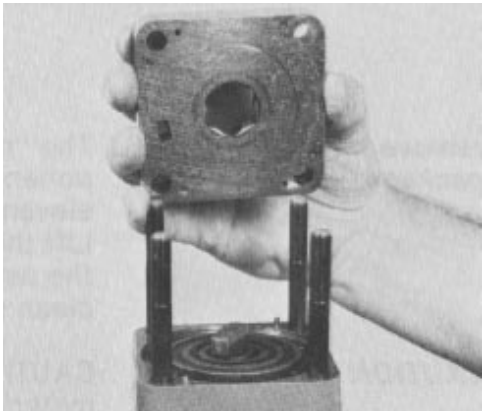

Figure 39

21. Remove the two isolation manifold-metering ring alignment pins (Fig. 40).

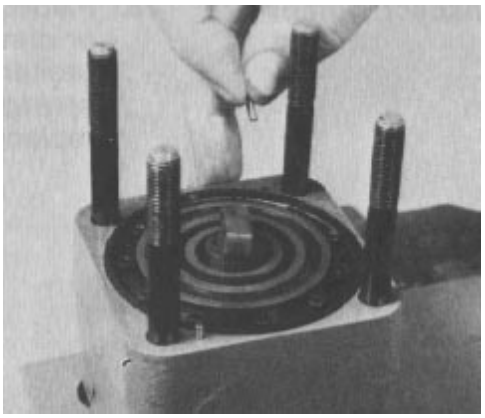

Figure 40

22. Remove the drive link from the unit (Fig. 41).

23. Inspect each end of the drive link. the four crowned contact surfaces should not be worn or scored. Replace if wear or scoring is evident.

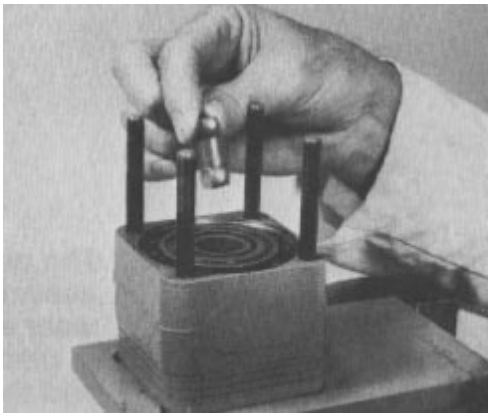

Figure 41

24. Remove the metering ring and discard the two seal rings (Fig. 42). If the metering ring bore is scored, it should be replaced.



Figure 42

25. The “metering package” components are held together with eleven hex socket head screws. Lift the metering package from the assembly, and put it on a clean surface (Fig. 43).

IMPORTANT: Do not clamp the metering package in a vise, as this could damage the components.



Figure 43

26. Remove and discard the commutator seal from the commutator cover (Fig. 44).

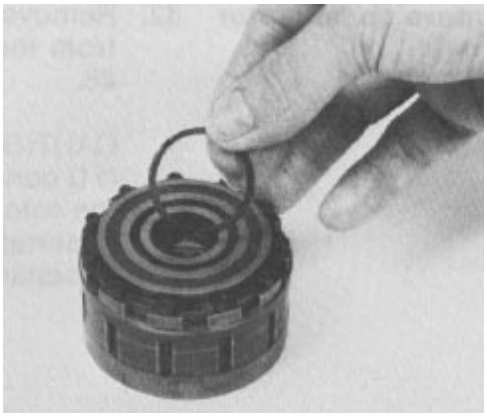

Figure 44

27. Remove the eleven hex socket head screws, that hold the metering package together (Fig. 45). Use a 3/32 in. allen wrench. Inspect the screws for thread and socket damage and replace as necessary.

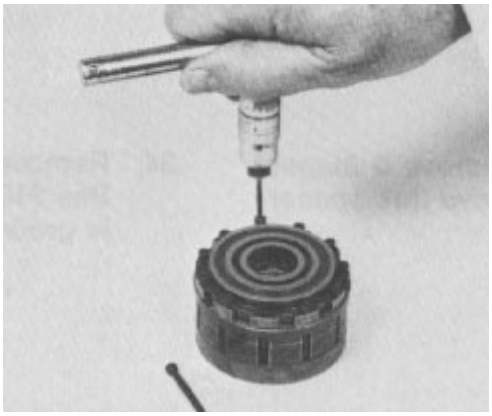

Figure 45

28. Lift the commutator cover from the metering package (Fig. 46).

29. Inspect the ground surfaces of the commutator cover. You should notice a “normal” polished pattern due to the rotation of the commutator. If the cover has nicks, burrs, or scoring, it must be replaced.

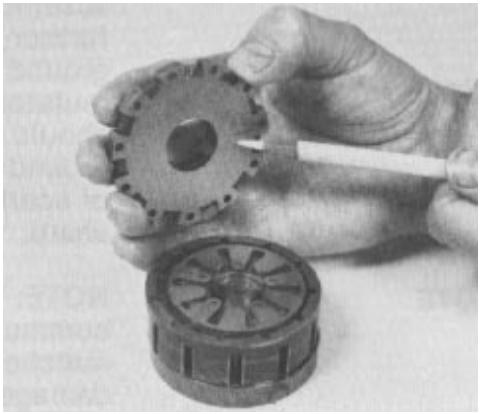

Figure 46

30. Remove the commutator ring (Fig. 47). Inspect for cracks, burrs and scoring.

IMPORTANT: Handle the commutator ring with care, as it is easily broken.



Figure 47

31. Remove the commutator from the rotor (Fig. 48).

IMPORTANT: To prevent damage, DO NOT use a screwdriver to remove the commutator. Use a wood dowel if necessary.

32. The commutator is made up of two round plates, pinned and bonded together as a permanent assembly that cannot be disassembled. Inspect the ground surfaces of the commutator. The holes and edges should be free of nicks. The ground surfaces should be free of scoring. The edges should be sharp.

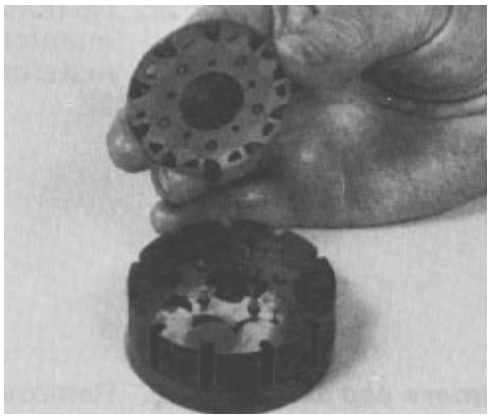

Figure 48

NOTE: The commutator and commutator ring are a matched set. If either is worn or damaged, the set must be replaced.

IMPORTANT: Five alignment pins connect the commutator to the rotor with a slip fit. Care and minimum force should be used to separate the two components.

33. Remove the five alignment pins (Fig. 49).

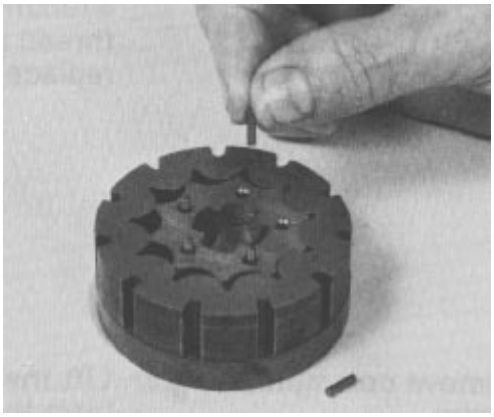

Figure 49

34. Remove the drive link spacer (Fig. 50). Replace it if it grooved or worn.

35. With the rotor set lying on the drive plate, the rotor should rotate and orbit freely within the stator. The commutator side of the stator face must be free of grooves or scoring.

NOTE: the rotor and stator are a matched set. You must replace them as a matched set, if either is worn or damaged.

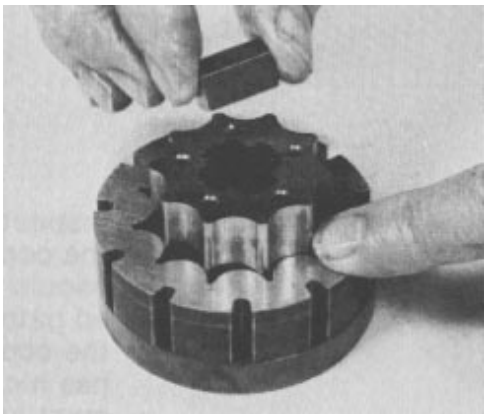

Figure 50

36. Check the rotor lobe “tip” to stator lobe “tip” clearance, with a feeler gauge (Fig. 51). The rotor lobe, directly across from the rotor lobe tip being measured (see pointer in Fig. 51) must be centered between stator lobes during the measurement. A rotor and stator that exceeds the maximum allowable “tip” clearance, must be replaced.

Max. rotor to stator “tip” clearance: 0.003 in. (0.08 mm)

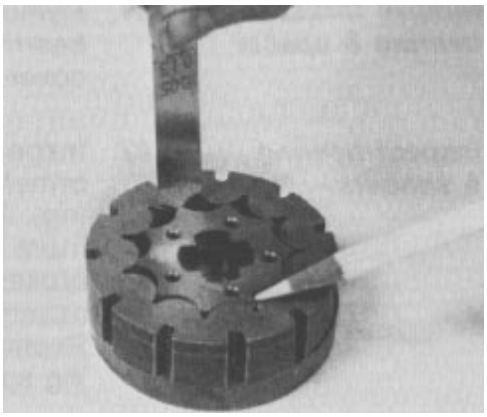

Figure 51

37. Remove the rotor set from the drive plate. The drive plate side of the rotor set also must be free of grooves or scoring.

NOTE: Handle the rotor set carefully to avoid nicks and scratches.

38. The rotor side of the drive plate (Fig. 52) should show the “normal” spiral pattern due to rotor movement.

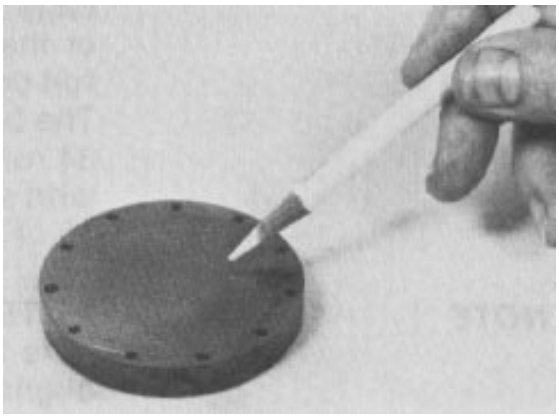

Figure 52

39. Inspect the thrust bearing side of the drive plate (Fig. 53) for brinelling (dents) or spalling (flaking). The flat sides of the input shaft engagement hole should not be grooved or worn. If any of these conditions in steps 38 and 39 are present, the drive plate must be replaced.

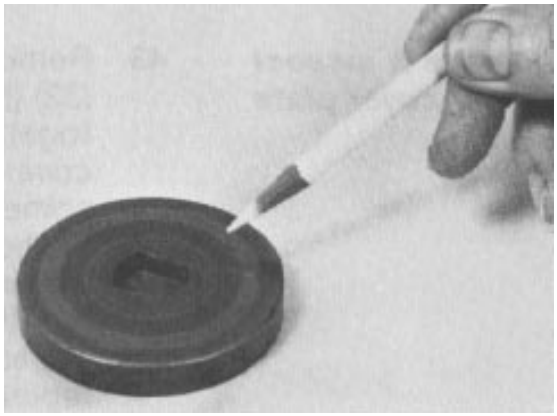

Figure 53

40.Remove the face seal, back-up ring, and face seal spacer from the upper cover plate (Fig. 54). Discard the face seal and back-up ring. Keep the metal spacer.

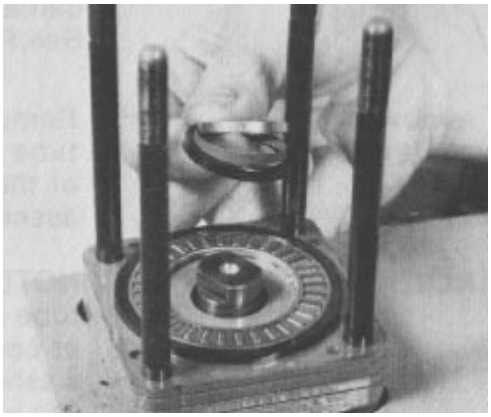

Figure 54

41. Remove the thrust bearing and bearing spacer from the upper cover plate (Fig. 55).

42. Inspect the thrust bearing for brinelling (dents) or spalling (flaking), if either exists, or if one or more of the rolls are lost or broken, replace the bearing assembly. Replace the seal spacer or bearing spacer if worn or broken.

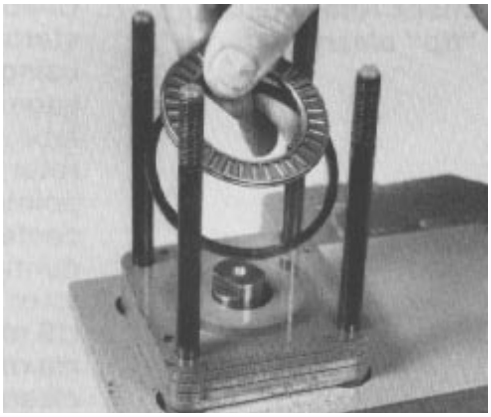

Figure 55

43. Remove the upper cover plate (four plates bonded together) (Fig. 56). Inspect the upper cover plate. You should notice some polishing due to the action of the seal. The plate should be free of brinelling (dents) or spalling (flaking). If it is damaged, the upper cover plate must be replaced.

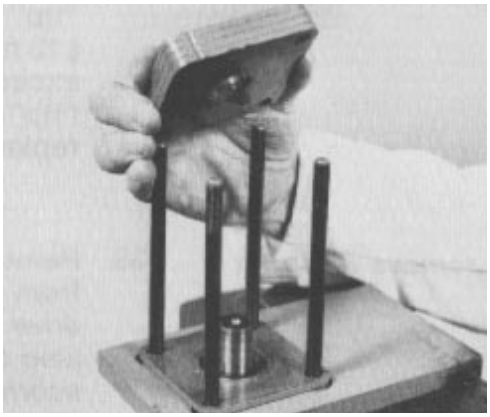

Figure 56

44. Slide the seal from the jacket tube (Fig. 57). If the seal is worn or damaged, it must be replaced.

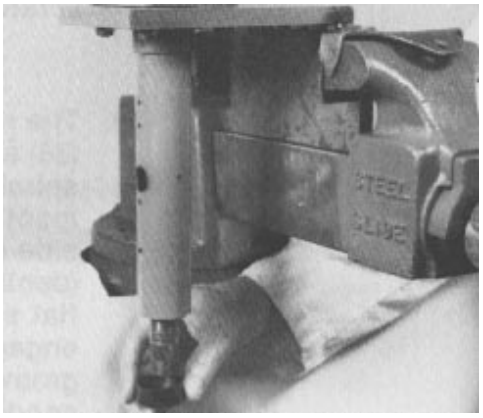

Figure 57

45. Remove the input shaft and snap ring, sliding it out of the upper cover end of the assembly (Fig. 58).

46. Inspect the input shaft serrations, threads and flats for grooves, wear, or damage.

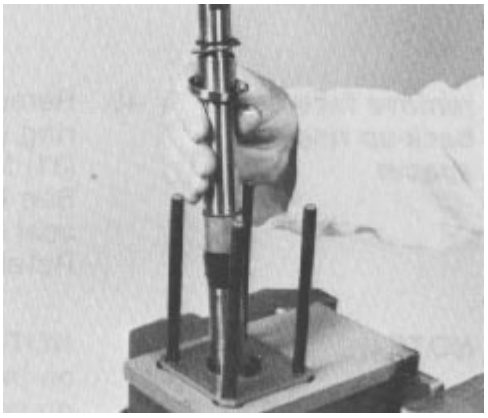

Figure 58

47. Remove the washer and upper cover & jacket (Fig. 59).

NOTE: The retaining plate and upper cover & jacket are a matched set. If either part is worn or damaged, both must be replaced.

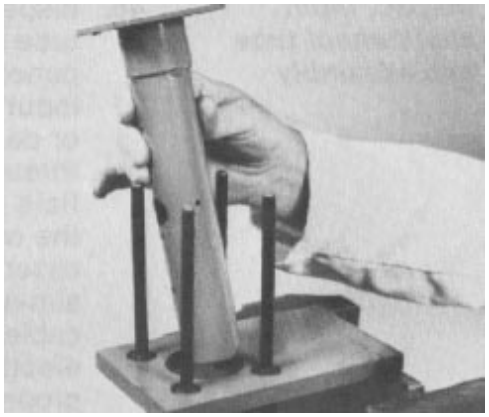

Figure 59

48. Inspect the bushing at the top of the cover & jacket for wear or damage. If bushing replacement is necessary. put the upper cover & jacket in a vise. Use a pliers or punch to straighten the crimped areas on the bushing end of the jacket tube (Fig. 60).

IMPORTANT: Hold the steering tube in a soft-jaw vise. Be careful not to damage the steering tube.

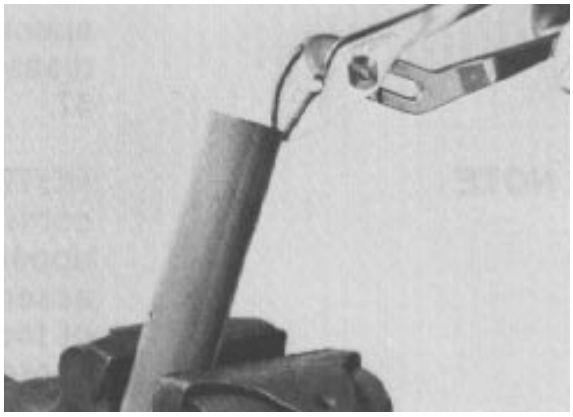

Figure 60

49. Use a bearing puller to remove the bushing (Fig. 61).

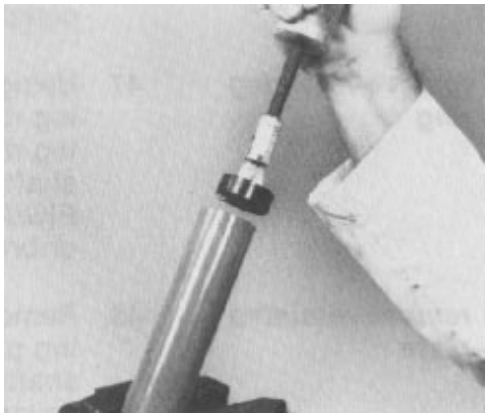

Figure 61

50. Remove the nuts holding the four bolts to the fixture, and remove the bolts (Fig. 62). Check the bolt threads for wear or damage.

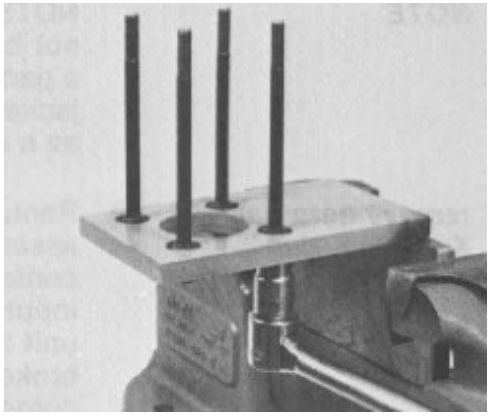

Figure 62

Assembly of Steering Valve

Replace all seals and o-rings with new ones. Make sure the seals and o-rings remain seated correctly when components are assembled.

Before assembling the steering valve, wash all parts in clean solvent. Dry the parts with compressed air. DO NOT wipe them dry with a cloth or paper as lint and dirt may remain.

1. Put the four bolts into the fixture with the shortest threaded end of the bolts through the fixture holes (Fig. 63). Secure the bolts to the fixture with four 5/16-24 UNF nuts. Tighten the nuts to secure the assembly to the fixture, but loose enough to turn the bolts and facilitate stacking of components.

2. If the bushing was removed from the upper cover and jacket for replacement, press a new bushing into the upper end of the jacket tube with the recessed end of the bushing toward the jacket tube. Use an arbor press or the wood handle end of a hammer (Fig. 64). Push the bushing down until it is 0.1 in. (2.5 mm) below the top of the jacket tube. Use a pliers or punch to “crimp” the end of the jacket tube over the bushing in two places approximately 90° away from the original crimped areas (Fig. 65). Put clean multi-purpose grease on the inside of the bushing.

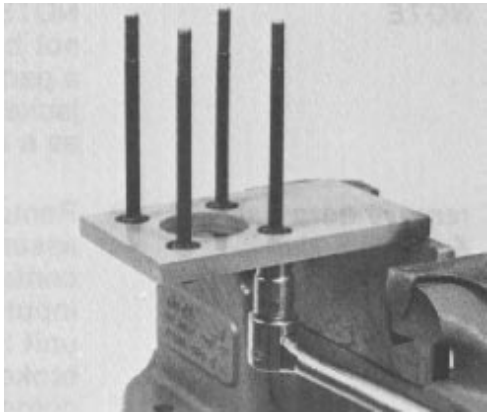

Figure 63

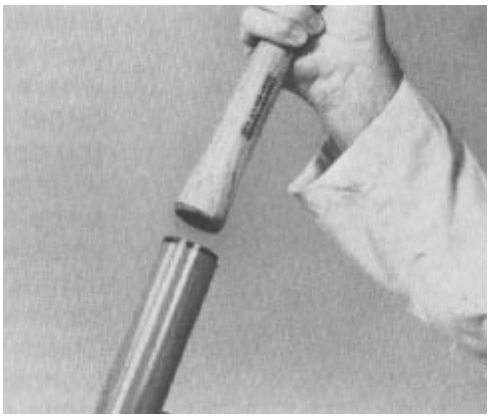

Figure 64

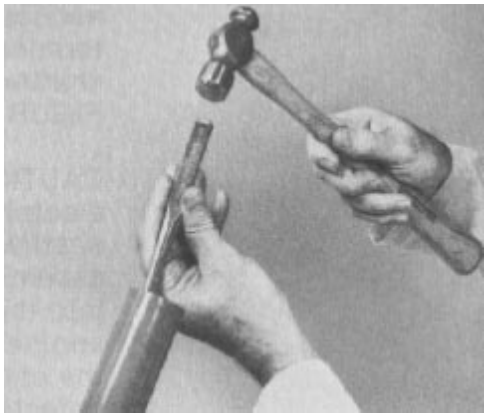

Figure 65

3. Put the upper cover and jacket on the four bolts with the jacket tube pointing down through the hole in fixture (Fig. 66). Make sure the square shoulder of the bolts engage the square holes in the upper cover.

4. Apply a small amount of multi-purpose grease to the recessed face of the retainer plate and washer. Put the retainer plate into the upper cover & jacket with the recessed retainer face out. Put the washer against the recessed face of the retainer plate.

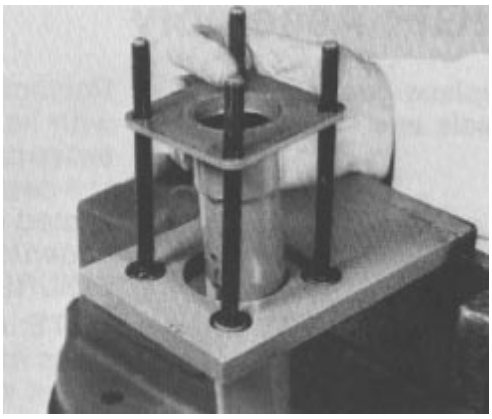

Figure 66

5. Install the snap ring onto the input shaft if it was removed (Fig. 67).

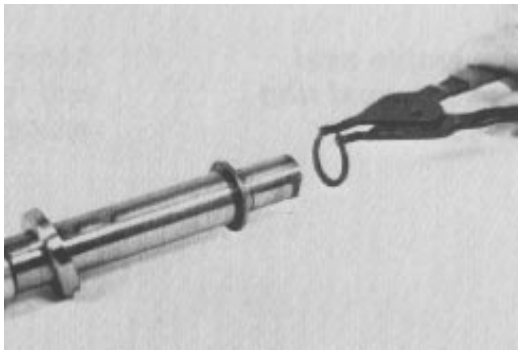

Figure 67

6. Slide the input shaft into the upper cover end of the upper cover & jacket and through the bushing until the retaining ring bottoms against the washer. Make sure the washer bottoms against the retainer plate recessed face and the retainer plate seats against the end of the jacket tube (Fig. 68).

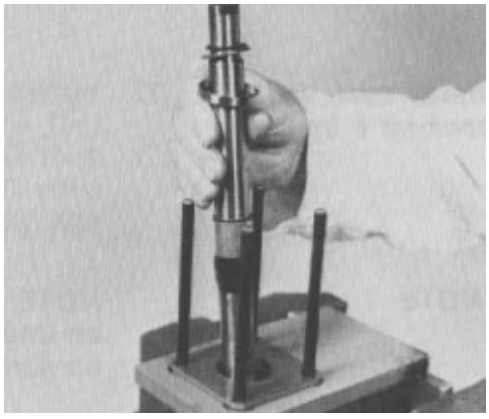

Figure 68

7. Install the upper cover plate over the four bolts with the highly polished surface up (Fig. 69).

IMPORTANT: The alignment grooves must be all on one side of the steering valve for proper operation.

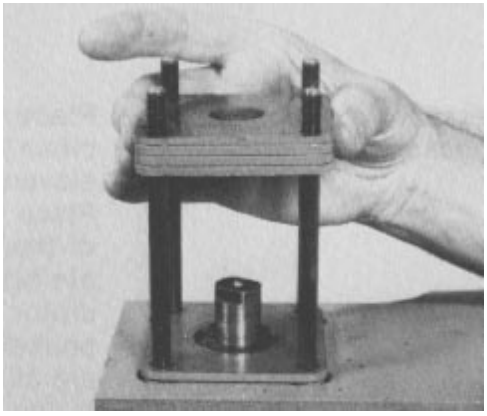

Figure 69

8. Apply clean multi-purpose grease to the face of the upper cover plate, input shaft and face seal (Fig. 70).

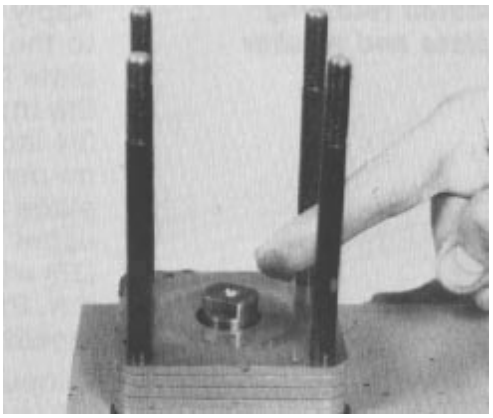

Figure 70

9. Assemble the seal back-up ring and face seal onto the seal spacer (Fig. 71).

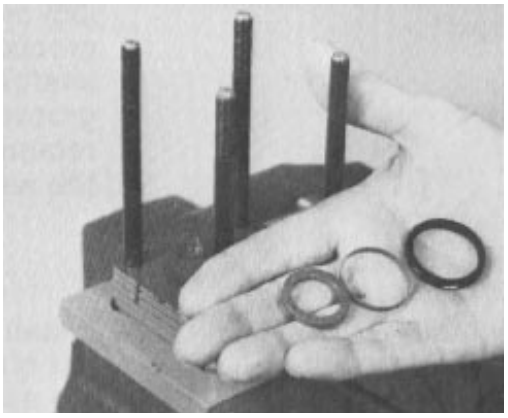

Figure 71

10. Install the face seal, back-up ring and spacer assembly over the end of the input shaft and onto the upper cover plate (Fig. 72).

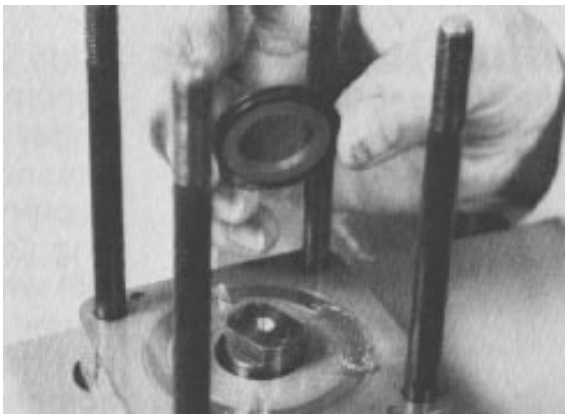

Figure 72

11. Put the drive plate on a clean lint-free surface with the eleven tapped holes facing up. Put the rotor set on top of the drive plate with the five pin holes facing up. Rotate the stator until the eleven hex socket head screw relief slots are aligned with the tapped holes in the drive plate (Fig. 73).

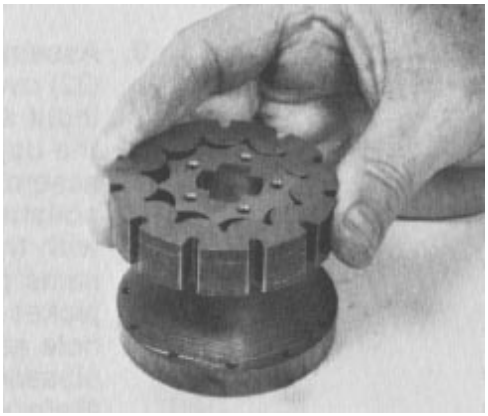

Figure 73

12. Apply a small amount of clean multi-purpose grease to the spacer and insert it into the drive slot in the rotor (Fig. 74). The grease will aid in retaining the spacer during other assembly procedures.

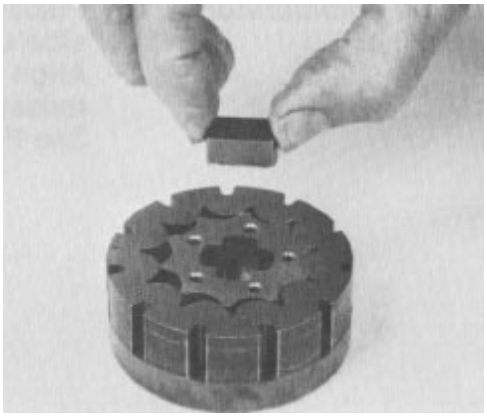

Figure 74

13. Put the commutator on top of the rotor. Be sure the correct surface (Fig. 75) is towards the rotor.

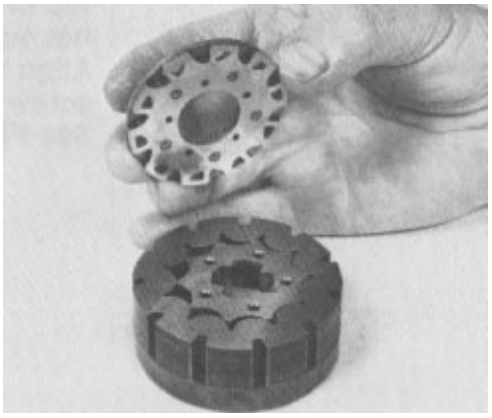

Figure 75

14. Align the five holes and press the five alignment pins in place (Fig. 76).

IMPORTANT: Make sure the five alignment pins are pressed below the surface of the commutator.

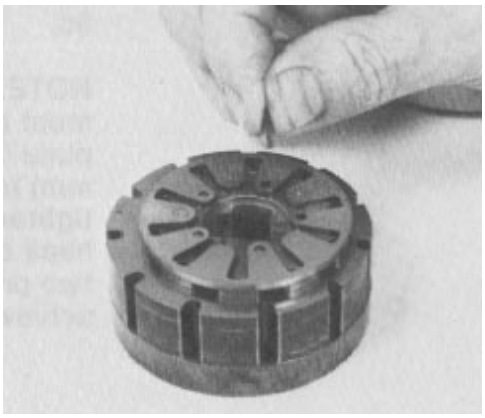

Figure 76

15. Put a few drops of oil into each recess in the commutator (Fig. 77).

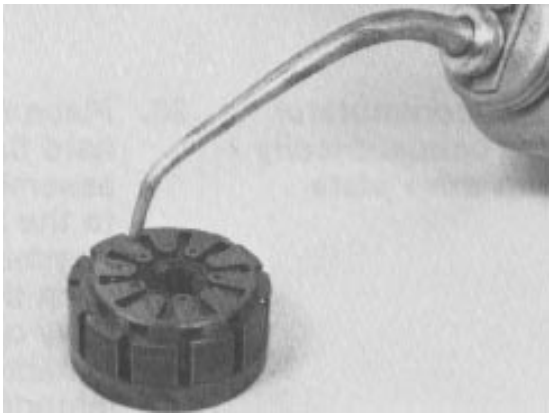

Figure 77

16. Put the commutator ring (either side up) on top of the stator (Fig. 78). Align the commutator ring screw recesses with the stator screw slots.



Figure 78

17. Put the commutator cover on top of the commutator ring with the flat surface towards the commutator (Fig. 79). Align the screw holes in the cover, with the screw holes in the drive plate.

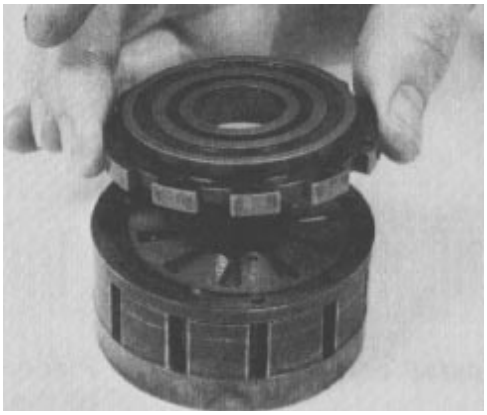

Figure 79

18. Screw the eleven hex socket head cap screws loosely into the metering package (Fig. 80).

NOTE: The commutator ring must be concentric with the drive plate within 0.005 in. (0.127 mm) total indicator reading AFTER tightening the eleven hex socket head cap screws. The next two procedures are a method of achieving the concentricity.

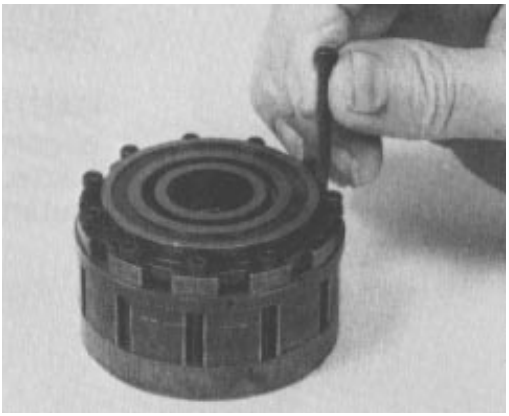

Figure 80

19. Put the metering ring on a hard flat surface. Put the assembled metering package into the metering ring with the commutator cover down, so the drive plate is partially out of the metering ring (Fig. 81). (A suitable wood block under the metering package will hold it in this position.) Put one piece of 0.007 in. (0.18 mm) shim stock approximately 0.5 in. (12 mm) wide and 1.5 in. (38 mm) long between the metering ring and drive plate in three places approximately equal distance around the outside diameter of the drive plate.

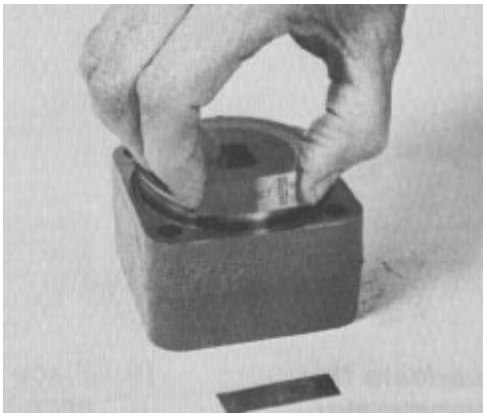

Figure 81

20. Put another piece of the 0.007 in. (0.18 mm) shim stock between the drive plate and each of the three pieces of shim stock already in place. Lift the metering ring and metering package and remove the wood block. Push the metering package and shims into the metering ring until the drive plate and shims are at least flush with the metering ring (Fig. 82).

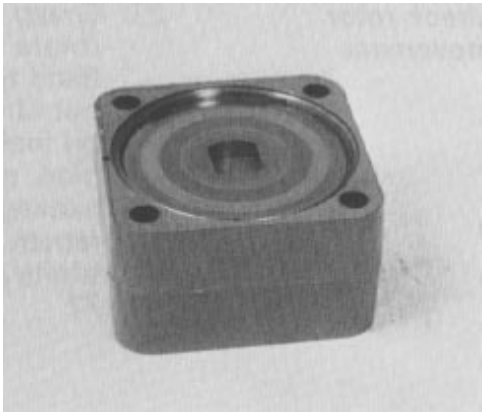

Figure 82

21. Reverse the metering ring and metering package as a unit on a flat surface. Push down on the metering package until the drive plate is on the flat surface. Be sure the cap screws are loose enough to allow the commutator ring and drive plate to align themselves concentrically in the metering ring bore. Gradually tighten the eleven cap screws, following the sequence shown in Figure 83 at least twice until a final torque of 11 - 13 in-lb (1.24 - 1.47 Nm) is reached (Fig. 83 and 84). Remove the metering package and shims from the metering ring. Discard the shims.

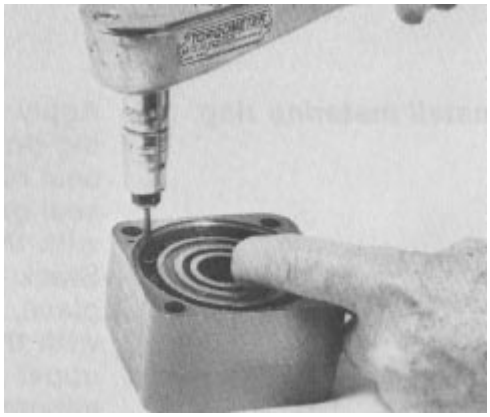

Figure 83

CAUTION

Use care and eye protection when adding and removing shims from the metering ring as the shims will be under spring tension and could fly into the air and cause injury.

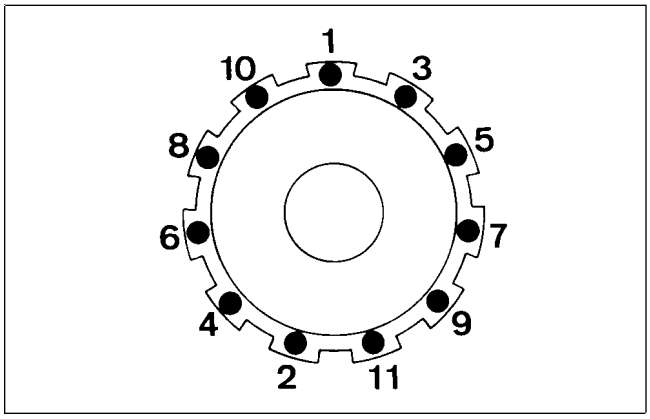

Figure 84

22. Insert the LARGE tang of the drive link into the slot in the rotor (Fig. 85).

IMPORTANT: An incorrect (reversed) assembly of the drive link will prevent the assembly of the hex drive.

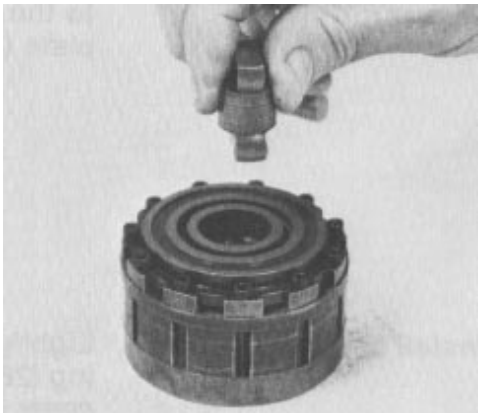

Figure 85

23. Grasp the drive link and rotate the metering package by hand to make sure the parts do not bind (Fig. 86). The rotor should orbit inside the stator. If they bind, disassemble the metering package, correct the cause and repeat the assembly and concentricity procedures.



Figure 86

24. Apply clean multi-purpose grease to the metering ring seal ring. Put the seal ring into position in the metering ring seal groove opposite to the end with the alignment pin holes. Stack the metering ring into place, over the four bolts, with the seal ring towards the upper cover plate. Make sure an alignment pin hole on the metering ring is in line with and on the same side as the alignment groove on the side of the upper cover plate (Fig. 87). This is required so the other components can be aligned correctly.

IMPORTANT: Make sure the seal ring does not slip from position.

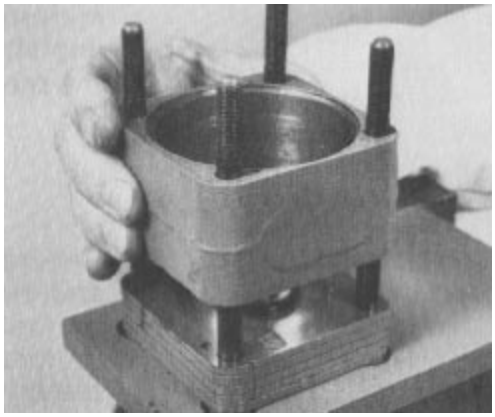

Figure 87

25. Put the bearing spacer onto the face of the upper cover plate (Fig. 88).

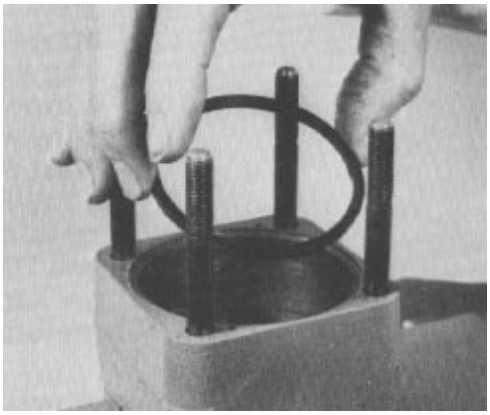

Figure 88

26. Lightly grease the roller thrust bearing and put it on the upper cover plate, inside the bearing spacer (Fig. 89).

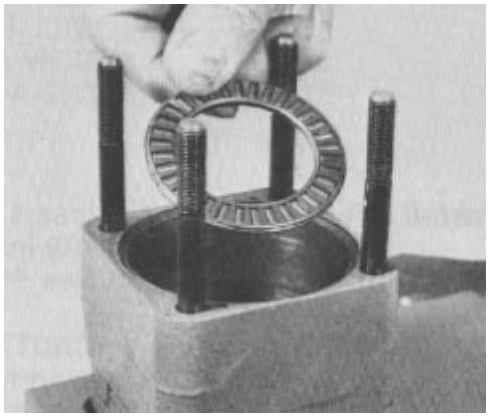

Figure 89

27. Inspect the exposed face of the drive plate making sure it is clean and lint free. Apply a small amount of clean multi-purpose grease on the drive plate (Fig. 90).



Figure 90

28. Put the metering package, drive plate side first, into the metering ring (Fig. 91). Revolve the input shaft or metering package until the hole in the drive plate engages the end of the input shaft and the drive plate is seated on the thrust bearing. When properly seated, the metering package will be below the surface of the metering ring.



Figure 91

29. Apply clean multi-purpose grease on the new commutator seal and put it into the commutator cover seal groove (Fig. 92). The rubber portion (the softer side) of the seal with the yellow mark must be put into the seal groove.

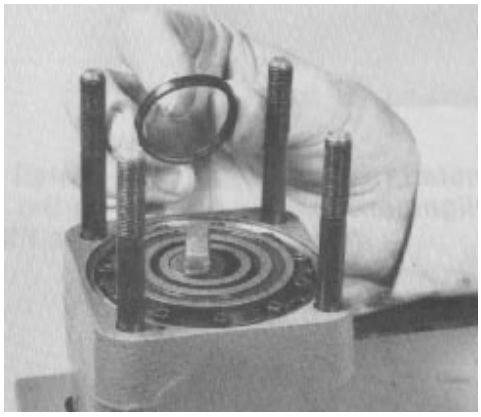

Figure 92

30. Apply clean multi-purpose grease to the metering ring seal ring. Put the seal ring into the metering ring seal ring groove (Fig. 93).

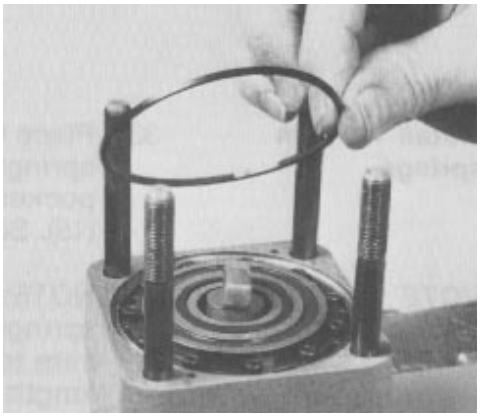

Figure 93

31. Put two alignment pins into the metering ring (Fig. 94).

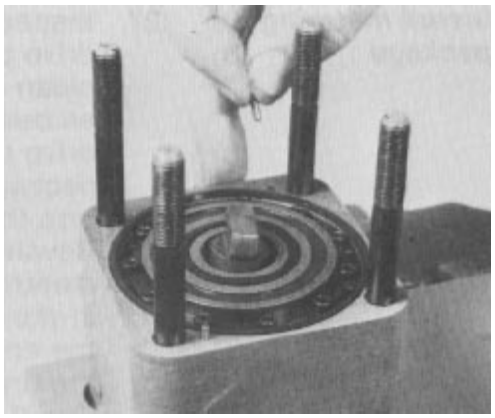

Figure 94

32. Stack the isolation manifold (4 plates bonded together) onto the metering ring, aligning the grooves on the side of the manifold with the grooves on the side of the upper cover plate (Fig. 95). Align the alignment pin holes with the alignment pins in the metering ring. The isolation manifold surface without the recessed slots must be toward the metering ring.

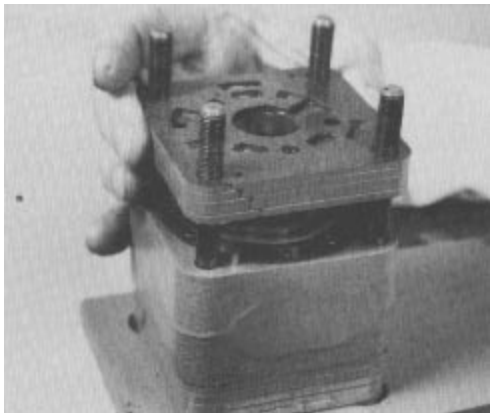

Figure 95

33. Install two alignment pins into the isolation manifold (Fig. 96).

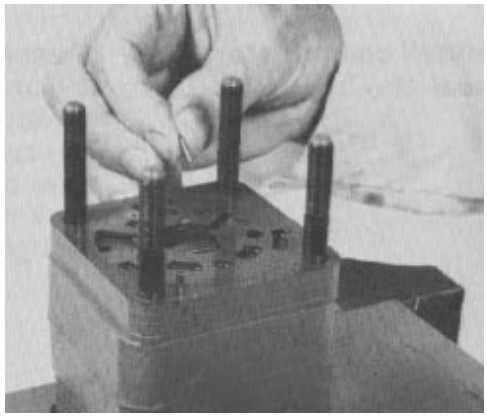

Figure 96

34. Put the three 1/2 in. (13 mm) springs into the spring pockets of the isolation manifold (Fig. 97).

NOTE: Two different length springs are used in the unit. Be sure to use the 1/2 in. (13 mm) length springs during this part of the assembly.

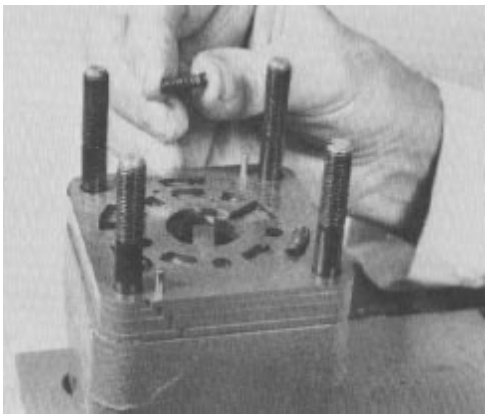

Figure 97

35. Apply clean grease to a seal ring and put it in the valve ring recess that will face down when installed. Install the valve ring over the bolts and alignment pins with the seal ring facing the isolation manifold (Fig. 98).

IMPORTANT: Be sure the seal ring is seated correctly after the valve ring is assembled.

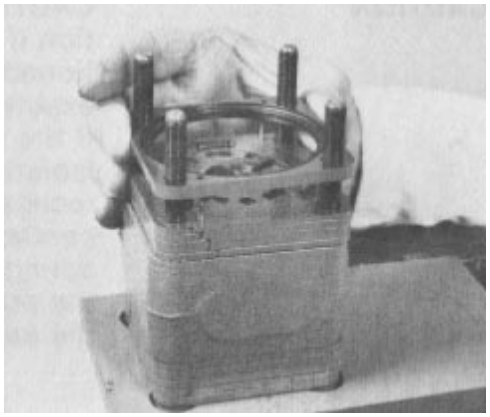

Figure 98

36. Put the hex drive assembly, pin side up, through the hole in the isolation manifold (Fig. 99). the slot in the hex drive must be engaged with the SMALL tang of the drive link. Turn the input shaft to assist the engagement.

NOTE: If the hex drive does not readily assemble on the drive link, the drive link was assembled incorrectly (See step 22 of this procedure.)

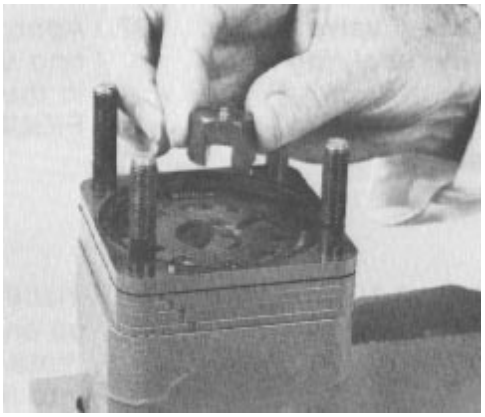

Figure 99

37. To install the valve plate correctly, first carefully study Figures 93 and 94 for positioning of the valve plate spring slots and other cavities in relation to the spring and spring recesses on the isolation manifold. Be sure to use the alignment grooves on the side of the isolation manifold for orientation.

Put the valve plate with the surface that reads “shaft side” down over the hex drive assembly. Align the three spring slots centrally over the three springs installed in the spring recesses of the isolation manifold. The valve plate spring slot with the small cavity and the words “port side” centrally below it (Fig. 100), must be placed over the spring and spring recess in the isolation manifold at the top (12 o’clock position) as shown (Fig. 100 and 101). Adjust the valve plate position radially to centralize the spring slots over the springs and the spring recesses in the isolation manifold.

IMPORTANT: The unit will not function if the valve plate is not positioned on the isolation manifold exactly as shown in Figure 101. If the valve plate spring slots, isolation manifold spring recesses and springs are not centrally aligned in this step, the springs could be damaged when the port manifold is installed onto the assembly.



Figure 100

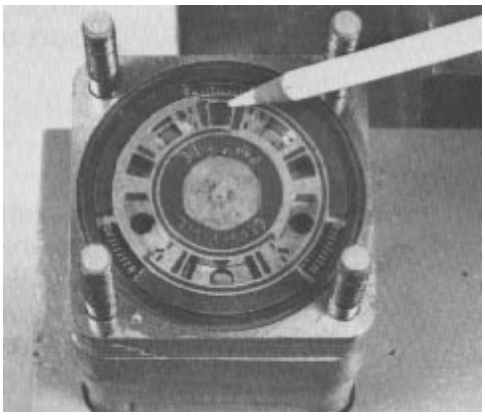

Figure 101

38. Apply clean multi-purpose grease to the valve ring seal ring. Install the seal ring in the valve ring (Fig. 102).

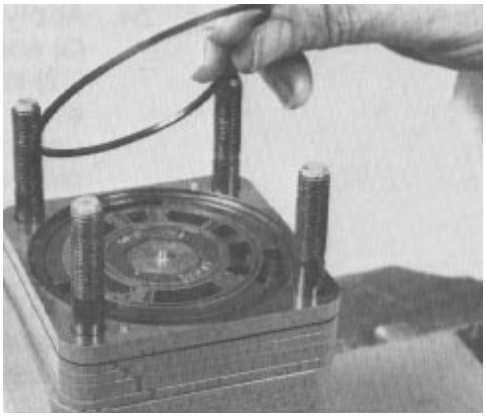

Figure 102

39. Put the port manifold (three plates bonded together), valve side up, in a clean surface. Install three 3/4 in. springs into the spring pockets (Fig. 103).

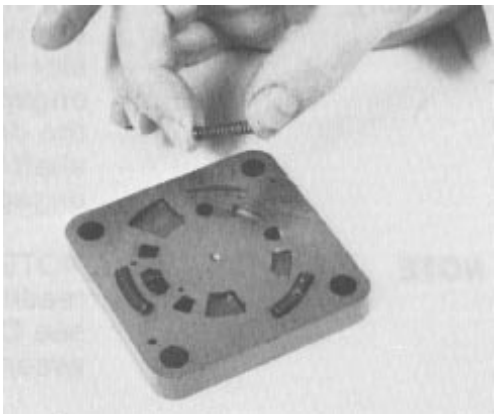

Figure 103

40. Apply a few drops of oil to the valve plate. Align the grooves on the side of the port manifold with the grooves on the side of the isolation manifold and assemble the port manifold with the springs toward the valve plate (Fig. 104). Be careful not to pinch a spring during installation. The two alignment pins in the valve plate will engage the holes in the port manifold. The pin on the hex drive assembly must engage the center hole in the port manifold.

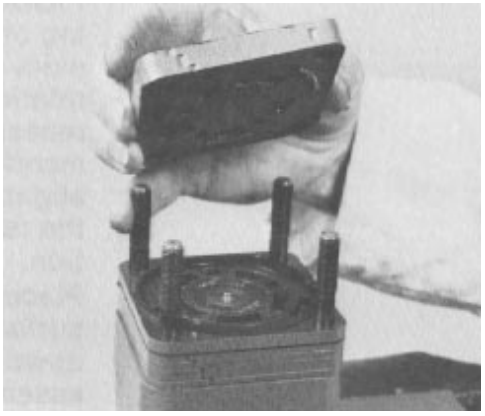

Figure 104

41. Install a new o-ring on the plug. Insert the check ball hole in the port cover. Be sure the ball is seated in the bottom of the check ball hole. Turn the plug assembly into the port cover until the ball is retained (Fig. 105).



Figure 105

42. Apply clean multi-purpose grease to the four o-rings and seal ring. Put the new o-rings and seal ring into their proper location in the port cover (Fig. 106).

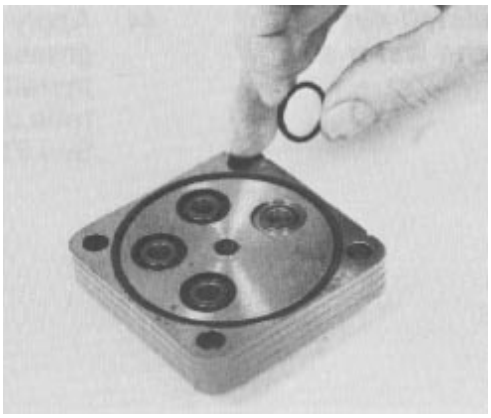

Figure 106

43. Align a groove on the side of the port cover with the grooves on the side of the port manifold and put the port cover into position (Fig. 107).

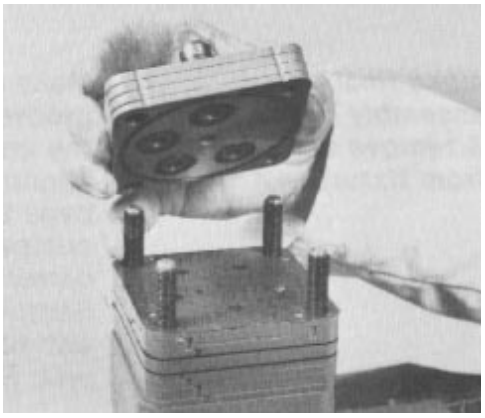

Figure 107

44. Install the lock nuts onto the bolts. Tighten each nut gradually until resistance is felt (Fig. 108). Tighten to a torque of 20 - 24 ft-lb (27 - 33 Nm) in the sequence shown (Fig. 109).



Figure 108

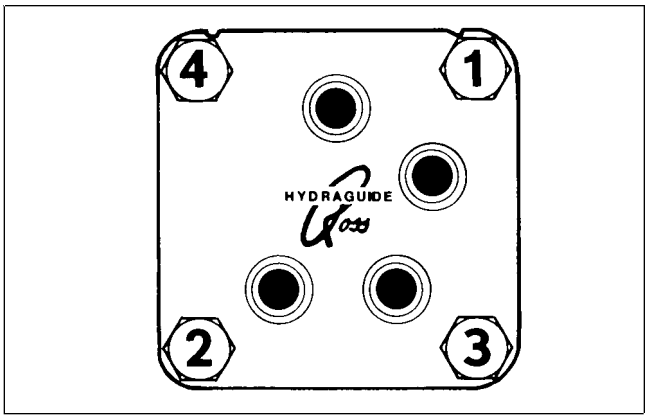

Figure 109

45. Tighten the plug to a torque of 8 - 12 ft-lb (11 - 16 Nm) (Fig. 110).

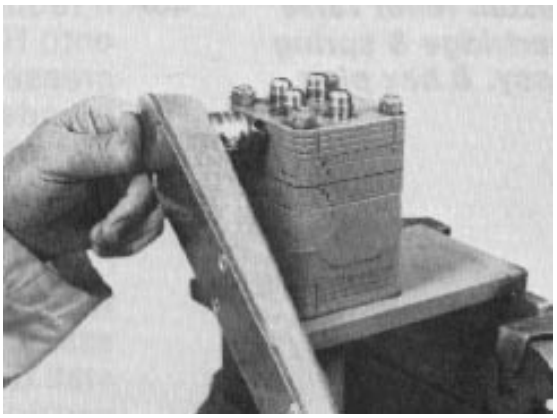

Figure 110

46. Apply a small amount of clean multi-purpose grease on the lip of the seal. Install the seal onto the jacket tube and input shaft (Fig. 111).

47. Make a final inspection of the relative groove positions on the side of the unit (Fig. 24). Components of the steering valve with alignment grooves, must be assembled so that their alignment grooves are positioned as illustrated for the valve to function correctly (Fig. 24). Disassemble and correct the assembly if necessary.

48. Remove the four nuts holding the unit to the fixture and remove the unit (Fig. 112).

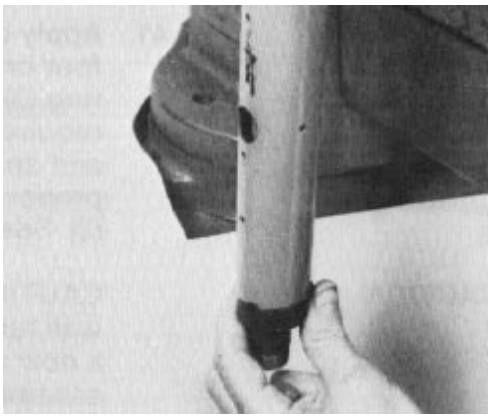

Figure 111

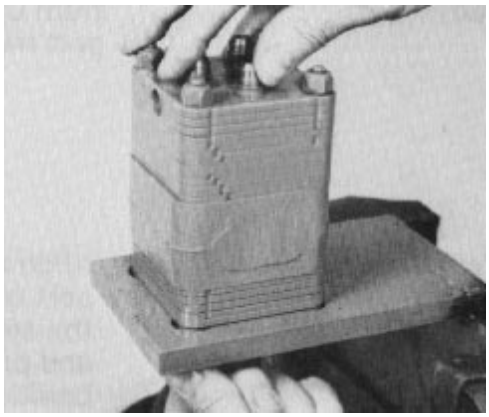

Figure 112

Chapter 8

Cutting Units

Table of Contents

SPECIFICATIONS 2
SPECIAL TOOLS 3
TROUBLESHOOTING 5
Factors That Can Affect Quality of Cut 5
SET UP AND ADJUSTMENTS 7
Adjustment Summary and Check List 7
Reel Bearing Service and Adjustment 8
Bedknife To Reel Adjustment 9
Front Roller Adjustment 10
Height Of Cut Adjustment 11
Shield Height Adjustment 12
Top Bar Adjustment 13
Lock-up Roller Adjustment 13
Lift Arm Down Pressure Adjustment 14
REPAIRS 15
Cutting Unit Removal and Installation 15
Reel Lapping 16
Bedbar Removal and Installation 18
Bedknife Replacement 19
Preparing Reel For Grinding 19
Reel Removal and Bearing Replacement 20
Lift Arm Spring Replacement 21

Specifications

Height of Cut:
5 Blade: 1/2 to 3/4 in.
8 Blade: 1/4 to 5/8 in.

Roller Adjustment:
Front: Fixed
Rear: Screw adjustable with bolt clamp lock

Bedknife To Reel Adjustment: Bedknife adjusts against reel, with opposed screw adjustment on each end of bedbar.

Bedknife Screw Torque: 200 in-lb.

Reel Splined Drive Nut Torque: 40 to 60 ft-lb.

Reel Bearing Rolling Torque: 4 to 7 in-lb with no end play.

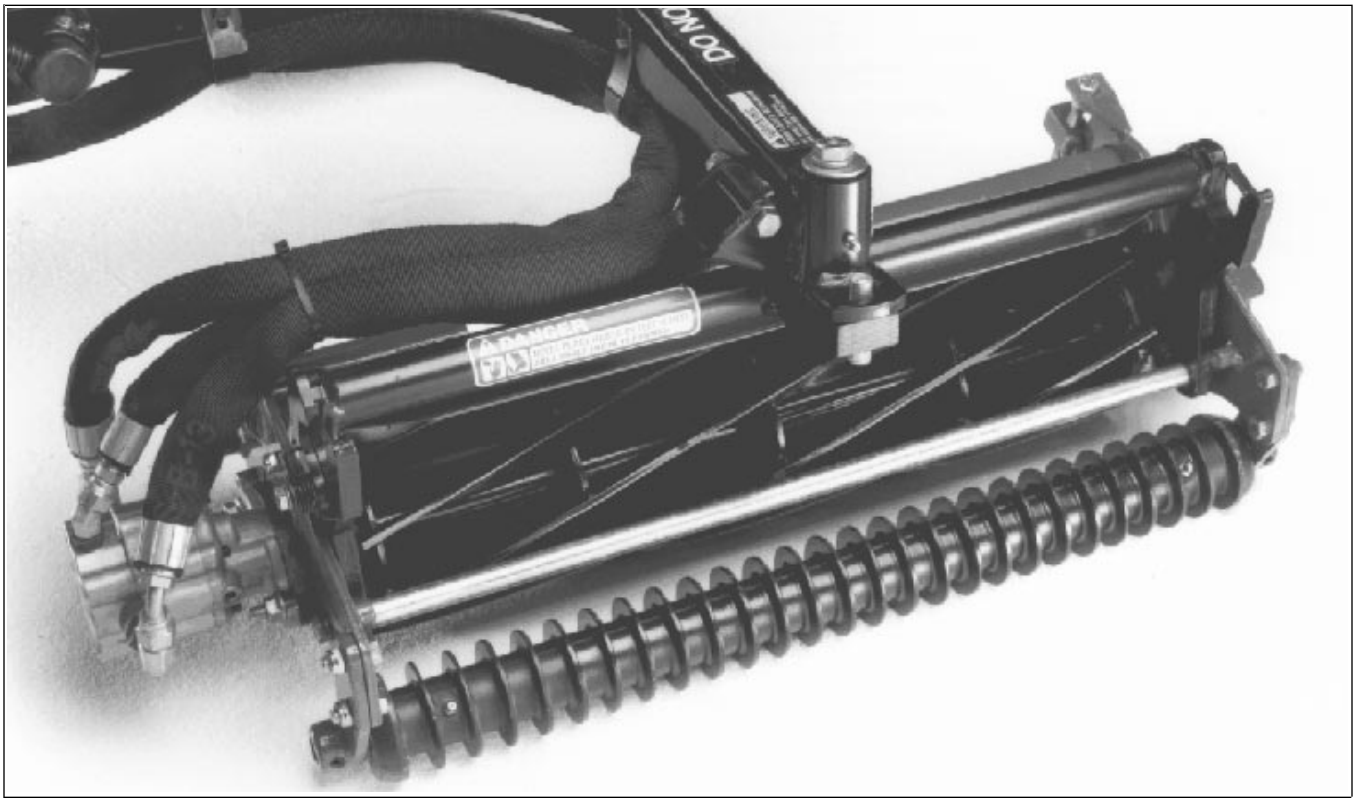

Figure 1

Special Tools

NOTE: Order special tools from the *TORO SPECIAL TOOLS AND APPLICATIONS GUIDE (COMMERCIAL PRODUCTS)*. Some tools may be listed in the Reelmaster Parts Catalog. Some tools may also be available from a local supplier.

Plastic Plug

Insert plug in cutting unit bearing housing in place of reel motor when sharpening or grinding the reel.

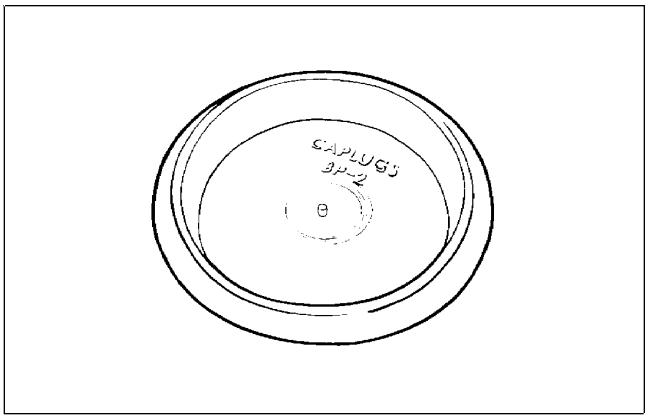

Figure 2

Handle Assembly

For applying lapping compound to cutting units while keeping hands a safe distance from the rotating reel assembly.

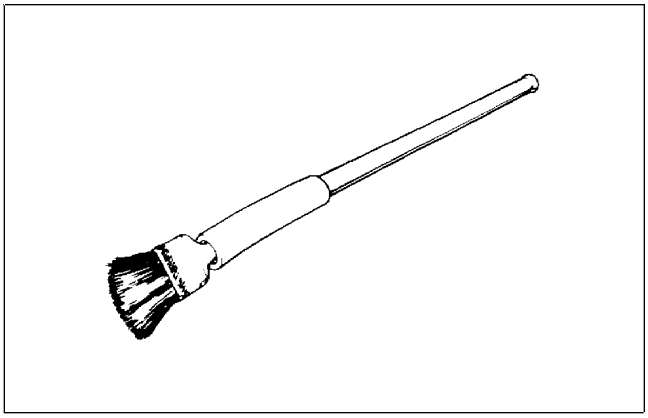

Figure 3

Bedknife Screw Tool

Fits Toro bedknife attaching screws. Use with torque wrench to secure bedknife to bedbar. With clean bedbar threads and new screws, tighten to a torque of 200 in-lb.

NOTE: Remove all rust, scale and corrosion from bedbar surface before installing bedknife.

DO NOT use an air impact wrench with this tool.

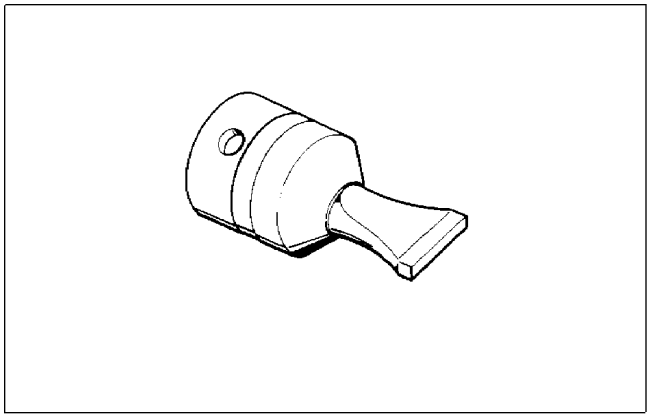

Figure 4

Troubleshooting

There are a number of factors that can contribute to unsatisfactory quality of cut, some of which may be turf conditions. Turf conditions such as excessive thatch, “sponginess” or attempting to cut off too much of the grass height may not always be overcome by adjusting the machine. It is important to remember that the lower the height of cut, the more critical these factors are. See the Adjustments and Repairs sections for detailed adjustment and repair information.

Factors That Can Affect Quality of Cut

Factor	Possible Problem/Correction
1. Engine maximum governed speed.	Check maximum governed engine speed. Adjust to specification if necessary. If engine is not running at specified maximum governed RPM, reel speed settings may not match ground speed.
2. Reel speed and ground speed.	Adjust reel speed to settings shown on REEL SPEED SETTINGS graph for number of reel blades (5 or 8) and desired ground speed (see Operator’s Manual). All reels must rotate at same speed (within 150 RPM). All cutting units must have equal bedknife to reel contact and reel bearing adjustment before checking. Do not run the reel too long or it may get hot and “rifle” when no grass is being cut. See Troubleshooting in Chapter 4 - Hydraulic System.
3. Cutting unit down pressure adjustment.	Down pressure spring on each cutting unit lift arm can be adjusted to compensate for different turf conditions. Increased down pressure will help keep the cutting units on the ground when mowing at higher speeds and helps maintain a uniform height of cut in rough conditions or in areas of thatch build up. Make sure all springs have the same down pressure adjustment. NOTE: Increased down pressure may lower the actual or “effective” height of cut.
4. Tire pressure.	Check tire pressure. Adjust to specification if necessary. Must be equal in two front tires and two rear tires.
5. Reel bearing condition/adjustment.	Check and adjust to specification. Replace bearings if worn or damaged. Bearing cones must be installed square to bearing housing - make sure there is no “flash”, paint or other foreign material in housing before installing new bearing cone.
6. Reel and bedknife sharpness.	Reel and/or bedknife that has rounded cutting edges or “rifling” cannot be corrected by tightening bedknife to reel contact. Grind reel to remove taper (cone shape) and/or rifling (grooved or ribbed appearance). Grind bedknife to sharpen and/or remove rifling. (Most common cause of rifling is bedknife to reel contact that is too tight.) NOTE: New bedknife must be ground after installing on bedbar to match bedknife to bedbar.

Factor	Possible Problem/Correction
7. Bedknife to reel contact.	Check bedknife to reel contact daily and adjust as necessary. Bedknife must have light contact all across reel. No contact will cause cutting edges to become dull. Excessive contact accelerates wear; quality of cut may be adversely affected. Slightly dull cutting edges may be corrected by backlapping. Excessively dull cutting edges must be corrected by grinding the reel and bedknife.
8. Front roller adjustment.	Check and adjust as necessary to avoid mismatch between cutting units.
9. Height of cut.	All cutting units set at same height of cut. Set with rear roller – must be equal at both ends of roller. Bench set height of cut and actual (effective) height of cut are different. Effective height of cut depends on cutting unit down pressure adjustment and turf conditions.
10. Rear roller scraper adjustment.	Set scraper to 1/32 in. clearance from roller.
11. Stability of bedbar.	Make sure bed bar pivot bolts are securely seated (maximum 40 ft-lb.) Make sure opposing bedknife adjustment screws are tight. To prevent distortion of adjustment screw mounting plate and to prevent damage to bedbar, do not over-tighten the screws.
12. Number of reel blades.	Select cutting unit model with correct number of blades for desired height of cut and reel speed.
13. Cutting unit alignment and carrier frame ground following.	Check lift arms and carrier frames for binding, bushing wear or damage. Repair if necessary.
14. Roller condition	All rollers must rotate freely. Grease when needed or repair bearings if necessary. Make sure roller brackets are in alignment to prevent excessive bearing wear.

Set Up and Adjustments

Adjustment Summary and Check List

DETAILED ADJUSTMENT INSTRUCTIONS FOLLOW THIS SUMMARY AND CHECK LIST. Study this information and refer to it often to get maximum life and performance from the cutting units.

Daily Performance Checks

NOTE: It is not necessary to remove cutting units from traction unit to perform these daily checks. It is recommended that mowers be washed after each use. Always remove key from ignition switch when working on the machine.

1. Purge water and debris from all bearings by greasing them. Use No. 2 multi-purpose lithium base grease.

2. Visually check for sharp reel and bedknife.

- Remove burrs, nicks, and rounded edges.

3. Lower cutting units to the ground (setting on both rollers). Remove reel motor and rotate the reel backwards by hand. Light contact between the bedknife and reel should be felt and heard.

- It should be possible to pinch newspaper when inserted from the front, and cut paper when inserted at a right angle (along entire length of bedknife).
- It should be possible to cut paper with minimum bedknife to reel contact. Should excessive reel drag be evident you must backlap or grind the cutting unit.
- No contact will dull the cutting edges.
- Excessive contact accelerates wear, and quality of cut may be adversely affected.

4. Check reel speed controls. If necessary, adjust reel speed to settings shown on REEL SPEED SETTINGS graph for number of reel blades (5 or 8) and desired ground speed (see Operator's Manual and decal on machine under seat plate).

NOTE: Reel speed settings may require "fine tuning" from initial adjustment for optimum cutting performance.

Weekly Checks

1. Check reel bearing adjustment and bearing condition.

2. Make sure bed bar pivot bolts are securely seated (maximum 40 ft-lb.).

3. Using a gauge bar, verify correct height of cut setting and adjust as necessary.

4. Check lift arm down pressure springs. Make sure all springs have same down pressure setting.

Monthly Adjustments

NOTE: Remove cutting unit from traction unit before doing these checks and adjustments (See Cutting Unit Removal and Installation in the Repairs section of this chapter.)

1. Visually check for sharp reel and bedknife. Backlap or grind reel and bedknife if necessary.

2. Adjust front roller.

3. Adjust bedknife to reel contact.

4. Using a gauge bar, set the height of cut adjustment.

5. Adjust rear roller scraper (if equipped) to be 1/32 in. from roller.

6. Check grass shield adjustment.

7. Set top bar adjustment.

- 0.060 in. from reel - normal.

Special Notes

1. A "rifled" reel and/or bedknife must be corrected by grinding.

2. If reel bearings will not hold adjustment during operation, loosen adjustment nut, tap on head of bolt at end of reel shaft with a small hammer until end play of reel shaft can be felt, tighten reel shaft *spline nut* to a torque of 40 to 60 ft-lb, then adjust reel bearings.

Reel Bearing Service and Adjustment

1. Adjust the bedknife so it is not in contact with the reel.

2. Reel bearing drag should be 4 to 7 in-lb. This can be measured with a torque wrench (Fig. 5). If bearing drag does not meet above specification, adjust the reel bearings.

NOTE: If you do not have an inch-pound torque wrench, do steps 1 - 3 under Reel Bearing Adjustment below.

Reel Bearing Adjustment

1. Remove mounting nuts from counterbalance end cap and remove end cap from the mounting studs (Fig. 6).

CAUTION

Do not use your hand to prevent reel from turning while servicing; this can result in personal injury. Use a 1/2 in. thick x 3 in. wide x 8 in. long piece of hardwood inserted into front of cutting unit between reel blades.

2. Loosen large reel bearing adjustment nut (Fig. 7). Tap on the head of the hex head bolt on the end of the reel shaft with a small hammer, until end play of the reel shaft can be felt.

NOTE: If reel bearings will not hold adjustment during operation, loosen adjustment nut, tighten reel shaft spline nut on right hand end of reel shaft to a torque of 40 to 60 ft-lb, then adjust reel bearings.

3. Tighten reel bearing adjustment nut until there is no reel shaft end play, then tighten an additional 1/16 to 1/8 turn. Be certain to remove all end play, but do not over-tighten.

NOTE: Adjustment nut must have enough resistance against reel shaft threads to retain bearing adjustment. Replace adjustment nut if necessary.

4. Check rolling torque with an inch-pound torque wrench (Fig. 7). Reel bearing rolling torque should not exceed 7 in-lb. Repeat steps 2, 3 and 4 if necessary.

5. If bearings require replacement, see Reel Removal and Bearing Replacement in the Repairs section of this chapter.

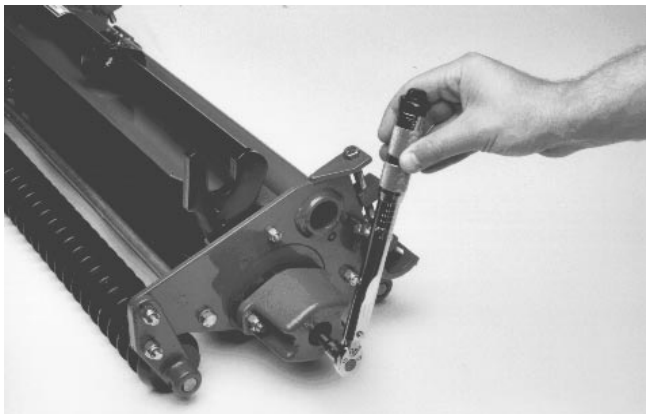

Figure 5

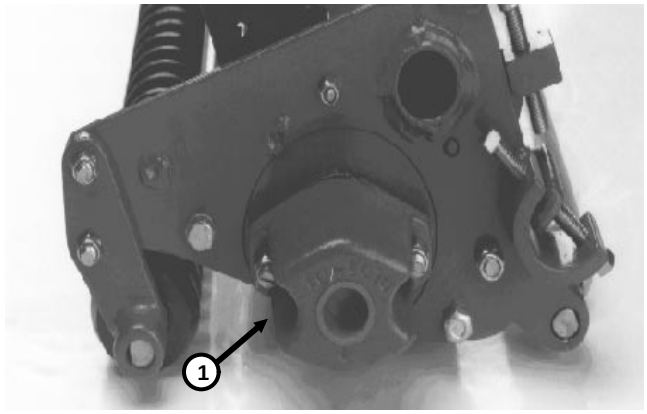

Figure 6

1. Counterbalance end cap

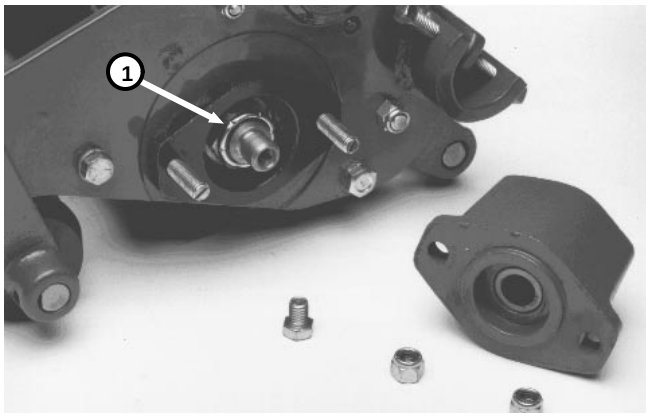

Figure 7

1. Reel bearing adjustment nut

Bedknife To Reel Adjustment

IMPORTANT: For adjusting bedknife to reel, use a 3/8 in. open end wrench that is 3 to 6 in. in length. A longer wrench will provide too much leverage and may cause distortion of the adjustment screw mounting plate or bedbar breakage.

1. To move bedbar closer to reel blades, loosen bottom screw on each side of cutting unit then tighten top adjustment screw on each side of cutting unit (Fig. 8). To move bedknife away from reel blades, loosen top screw on each side of cutting unit, then tighten bottom adjustment screw on each side of cutting unit.

2. After adjusting bedknife to reel, make sure that both the top and the bottom adjustment screws are secured at both ends of cutting unit.

3. After adjustment, check to see if reel can pinch paper when inserted from the front, and cut paper when inserted at a right angle (Fig. 9). It should be possible to cut paper with minimum contact between the bedknife and reel blades. Should excessive reel drag be necessary to cut paper (more than 7 in-lb) it **will** be necessary to either back lap or grind the cutting unit to achieve the sharp edges needed for precision cutting.

IMPORTANT: If excessive bedknife to reel contact is maintained, bedknife and reel wear will be accelerated. Uneven wear can result and quality of cut may be adversely affected.

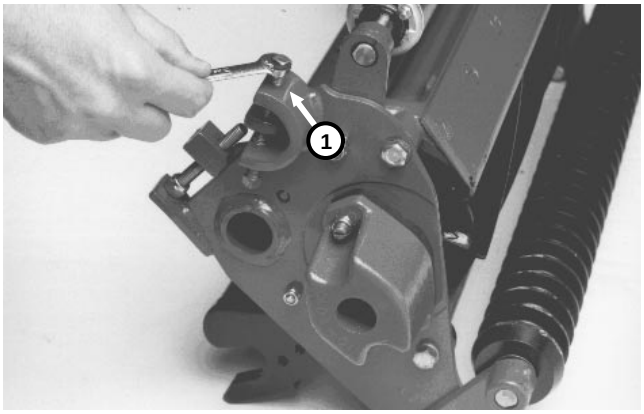

Figure 8A

1. Bottom bedknife adjustment screw

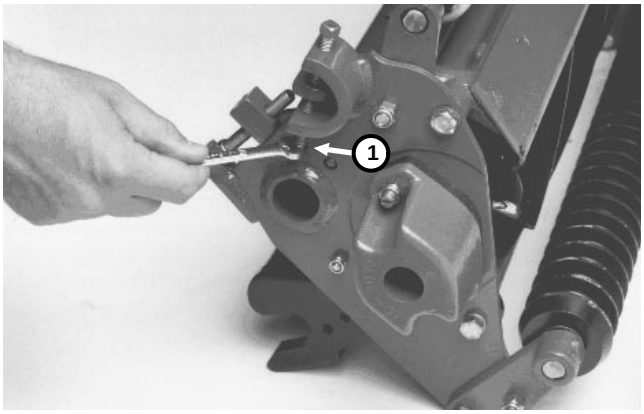

Figure 8B

1. Top bedknife adjustment screw

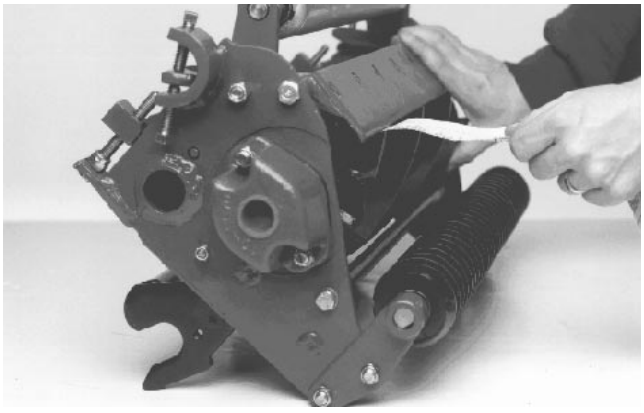

Figure 9

Front Roller Adjustment

Loosen four (4) capscrews holding front roller brackets. Push roller towards the rear, then hold in position and tighten capscrews. Make sure roller has not changed position. NOTE: When securing front roller brackets, tighten fastener on inside of cutting unit frame so position of roller bracket does not change.

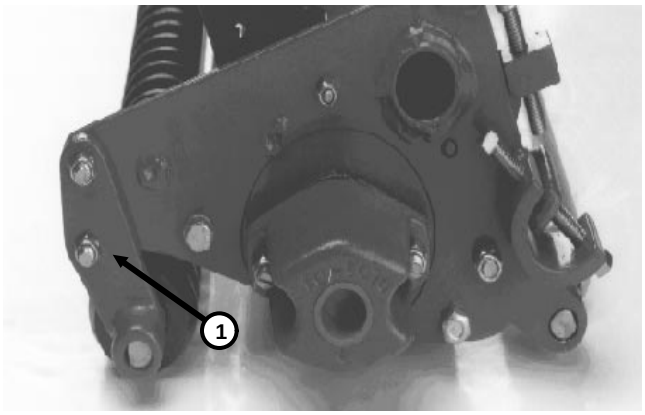

Figure 10

1. Roller bracket

Height Of Cut Adjustment

NOTE: Effective height of cut in the turf can be affected by lift arm down pressure adjustment and turf conditions, such as grass type, grass density, and amount of thatch.

1. Do bedknife to reel adjustment and front roller adjustment before adjusting height of cut.

2. To adjust height of cut, cutting unit should be turned over (Fig. 11).

3. Loosen locknut securing height of cut bracket to side plate on each end of cutting unit and loosen locknut on each height of cut adjusting bolt.

4. Set head of screw on gauge bar to desired height of cut. Height of cut measurement is from face of bar to under side of screw head.

5. Put bar across front and rear rollers. Turn height of cut adjustment bolt until underside of screw head engages bedknife cutting edge.

IMPORTANT: Do step 5 on each end of bedknife. Tighten height of cut adjustment bolt locknuts and height of cut bracket locknuts on both ends of cutting unit. Check adjustment and readjust if necessary.

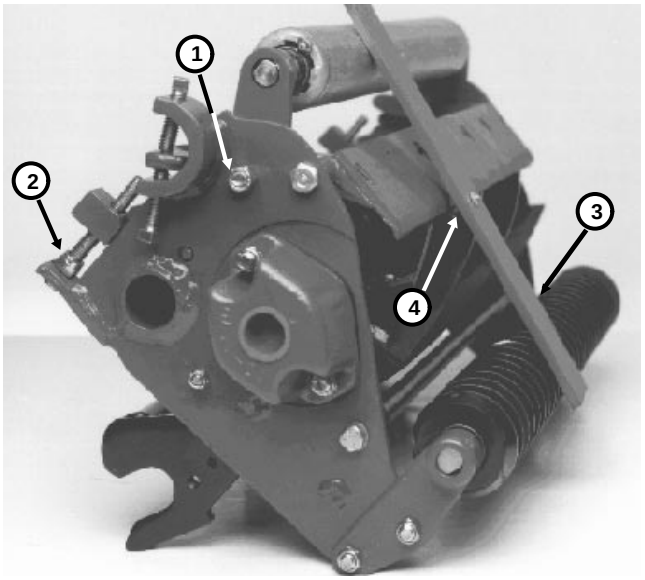

Figure 11

1. Locknut
2. Height of cut adjustment bolt
3. Gauge bar
4. Gauge bar screw head

Shield Height Adjustment

Adjust shield to get proper grass clipping discharge into basket or for desired front discharge when not using baskets.

1. Set cutting unit in normal cutting position.

2. Loosen capscrews and nuts securing shield to each side-plate, adjust shield to correct height and tighten fasteners (Fig. 13).

3. Repeat adjustment on remaining cutting units and adjust top bar. (See Top Bar Adjustment in this section of the book.)

NOTE: Shield can be lowered in dry grass conditions (clippings fly over top of baskets) or raised to allow for heavy wet grass conditions (clippings build up on rear edge of basket.

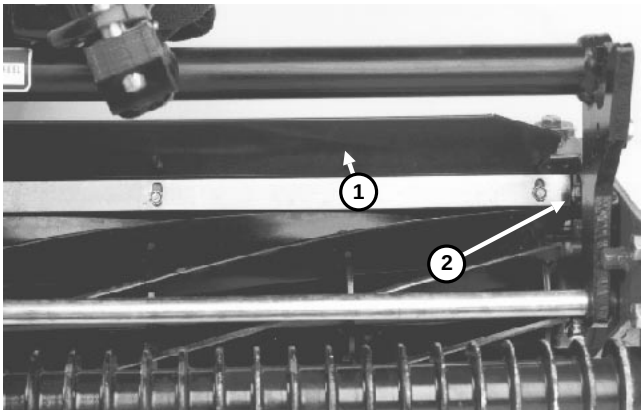

Figure 13

1. Shield **2. Shield fastener (one on each side)**

Opening Rear Shield

When mowing in conditions in which an excessive amount of clippings is being removed, rear discharge may be desirable. Opening the rear shield will allow direct discharge of clippings, to prevent cutting the clippings again.

1. Loosen locking bolt on side of cutting unit (Fig. 14).

2. Open rear shield to desired position.

3. Tighten locking bolt on each side of cutting unit.

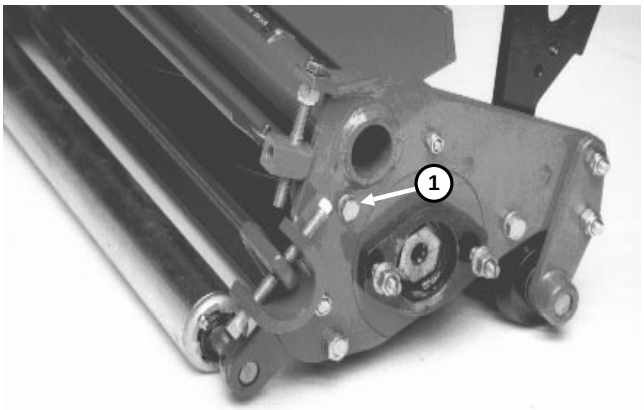

Figure 14

1. Rear shield locking bolt

Top Bar Adjustment

Adjust top bar to make sure clippings are cleanly discharged from reel area:

1. Loosen screws securing top bar (Fig. 15). Insert 0.060 inch feeler gauge between top of reel and bar and tighten screws. Make sure bar and reel are equal distance apart across complete reel.

2. Do adjustment on remaining cutting units.

NOTE: Bar should be parallel to reel for optimum performance and should be adjusted whenever shield height is adjusted or whenever reel is sharpened on a reel grinder.

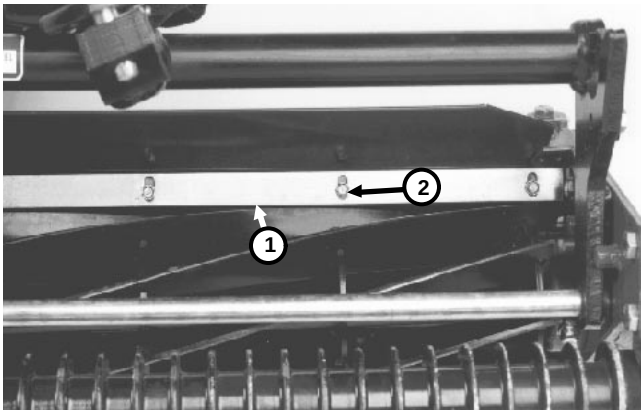

Figure 15

1. Top bar
2. Bar mounting screws

Lock-up Roller Adjustment

Adjust lock-up rollers so they contact the lock-up lever on each rear lift arm and support the cutting units when fully raised (Fig. 15a). The cutting units should have approximately 3/8 to 5/8 in. vertical travel when measured at the rear roller.

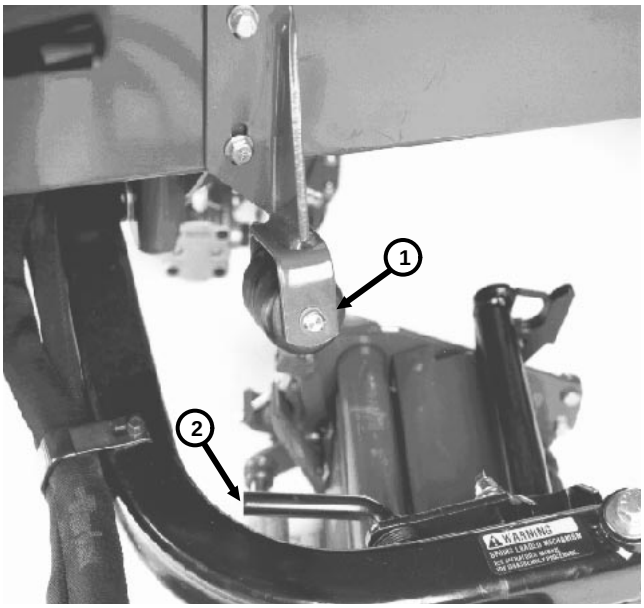

Figure 15a

1. Lock-up roller
2. Lock-up lever

Lift Arm Down Pressure Adjustment

The down pressure spring on each cutting unit lift arm can be adjusted to compensate for different turf conditions. Increased down pressure will help keep the cutting units on the ground when mowing at higher speeds and helps maintain a uniform height of cut in rough conditions or in areas of thatch build up.

Each down pressure spring may be adjusted to one of four (4) settings. Each increment increases or decreases down pressure on cutting unit by 8 lbs.

1. Put machine on a level surface, lower the cutting units, stop the engine, engage the parking brakes and remove key from ignition switch.

2. Remove floor plate in front of seat and open the hood to get access to all five (5) springs.

CAUTION

Springs are under tension. Use caution when adjusting.

3. Put an open end wrench on hex shaft of spring bracket.

NOTE: Because wrench can be moved only a limited distance, it may be necessary to use a second wrench to hold hex shaft while re-positioning other wrench for further rotation of hex shaft.

4. Remove capscrew and locknut securing retaining bracket, while rotating hex shaft to relieve spring tension.

5. Move spring bracket to desired position and install capscrew and locknut, while rotating hex shaft to relieve spring tension.

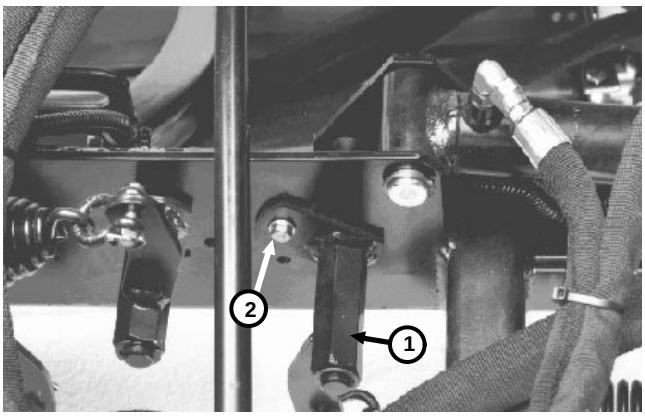

Figure 16

1. Spring bracket hex shaft
2. Retaining bracket

Cutting Unit Removal and Installation

Remove cutting unit from traction unit before doing adjustments or repairs.

1. Remove basket from cutting unit.

2. Disconnect chain from cross tube on each rear cutting unit (Fig. 17).

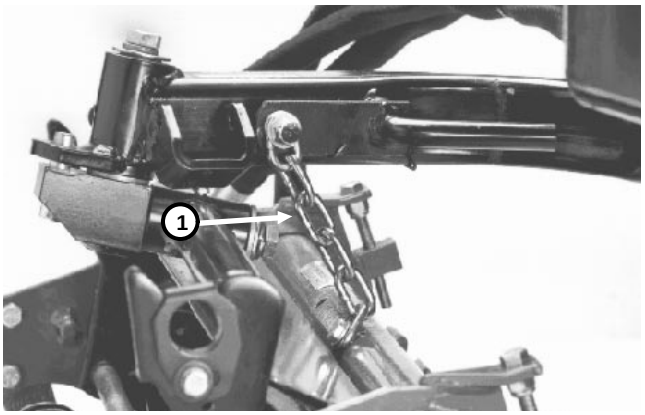

Figure 17

1. Lock up chain

3. Loosen reel motor mounting nuts (Fig. 18). Rotate the motor clockwise so motor flanges clear studs and pull motor off of cutting unit.

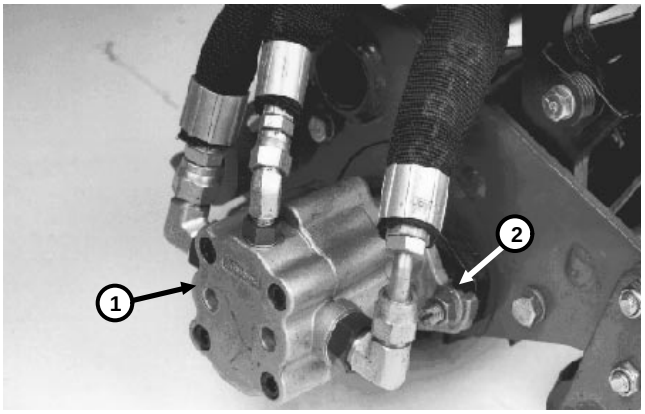

Figure 18

1. Reel drive motor **2. Mounting nuts**

4. Remove capscrew, lock washer, flat washer and thrust washer from cutting unit mounting shaft (Fig. 19).

5. Pull cutting unit off mounting shaft.

6. Reverse steps 1 - 5 to install cutting unit.

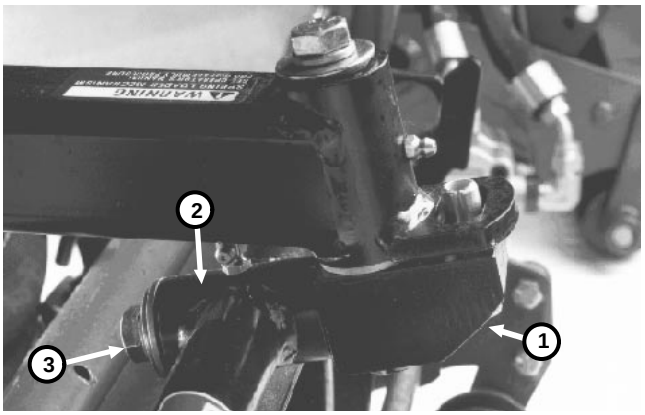

Figure 19

1. Cutting unit mounting shaft
2. Carrier tube frame pivot tube
3. Capscrew, lockwasher, flat washer and thrust washer

Reel Lapping

DANGER

Reel may stall while backlapping. Do not attempt to restart reels by hand or adjust while backlapping. Stop engine and turn H.O.C. knob one position toward "A".

1. Put the machine on a clean, level surface, lower cutting units, stop the engine, engage the parking brakes, move the enable/disable switch to DISABLE and remove key from ignition switch (Fig. 20)

2. Unlock and raise seat to expose controls.

3. Open control cover and turn the height of cut selection knob to position "P".

4. Make initial bedknife to reel adjustment for backlapping on all cutting units.

5. Start engine and run at IDLE SPEED.

DANGER

To avoid personal injury, never put hands or feet in reel area while engine is running. Changing reel speed while backlapping may cause reels to stall. Never change engine speed while backlapping. Only backlap at engine idle speed. Never attempt to turn reels by hand or with foot while engine is running.

6. Move backlap switch to either FRONT or REAR to select with reels are to be backlapped.

DANGER

To avoid personal injury, make sure you are clear of cutting units before proceeding.

7. Move enable/disable switch to ENABLE. Move lower mow/raise lever forward to start backlapping operation on selected reels (front or rear).

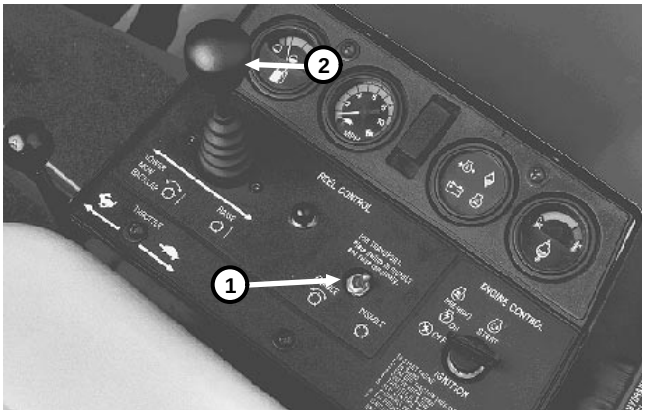

Figure 20

1. Enable / Disable switch
2. Lower Mow / Raise control lever

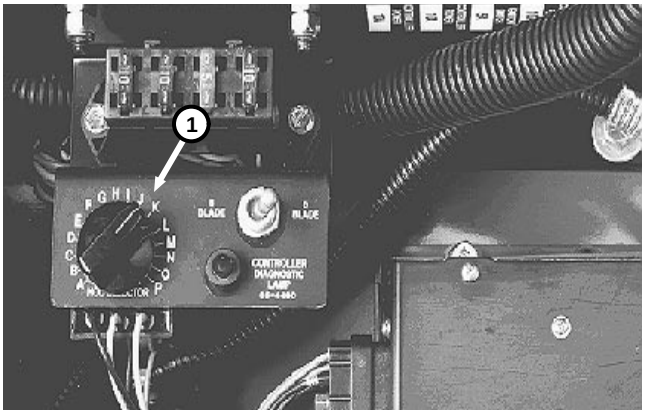

Figure 21

1. Height of cut (H.O.C.) selector knob

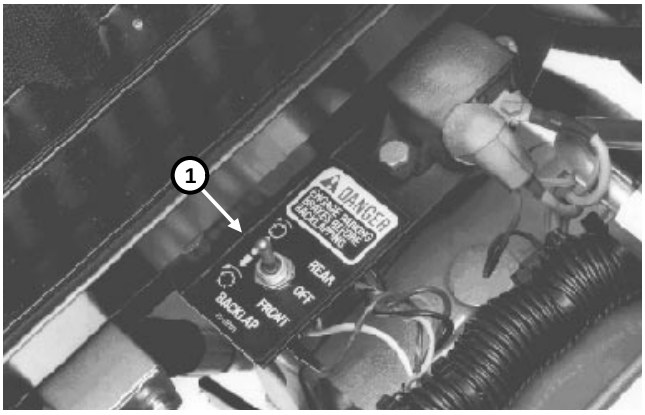

Figure 22

1. Backlap switch

8. Apply lapping compound with long-handled brush supplied with machine (Fig. 23). Never use a short handled brush.

9. If reel to be backlapped turns too slowly, or erratically, stop engine and turn H.O.C. knob one position toward “A”. Repeat steps 5 – 8. Position “P” will provide the slowest speed for backlapping. Position “A” will provide the fastest speed for backlapping. New motors will generally backlap at position “P”, but with time, the setting may need to be moved closer to “A” to compensate for motor wear.

10. To make an adjustment to the cutting units while backlapping, turn reels OFF by moving the lower mow / raise lever rearward; move the enable / disable switch to disable and turn the engine OFF. After adjustments have been completed, repeat steps 5 – 8.

11. Repeat procedure for all cutting units to be backlapped.

12. When backlapping operation has been completed, return the backlap switch to OFF, lower seat and tighten both locking bolts securely. Wash all lapping compound off cutting units. Do cutting unit reel to bedknife adjustment as necessary.

IMPORTANT: If the backlap switch is not returned to OFF position after backlapping, the cutting units will not raise or function properly.

IMPORTANT: If the cutting units are removed for backlapping (such as when bedknives are replaced) the reel speed sensors must be removed from the left front and left rear cutting units. Before backlapping, install a 3/8" capscrew in the left end of the reel shaft to drive the reel when backlapping. DO NOT attempt to use the capscrew which attaches the magnet to drive the reel for backlapping – this capscrew must be tightened to a maximum torque of 5 ft-lb to avoid damage to the magnet.

NOTE: For a better cutting edge, run a file across the front face of the bedknife when the lapping operation is completed. This will remove any burrs or rough edges that may have built up on the cutting edge.



Figure 23

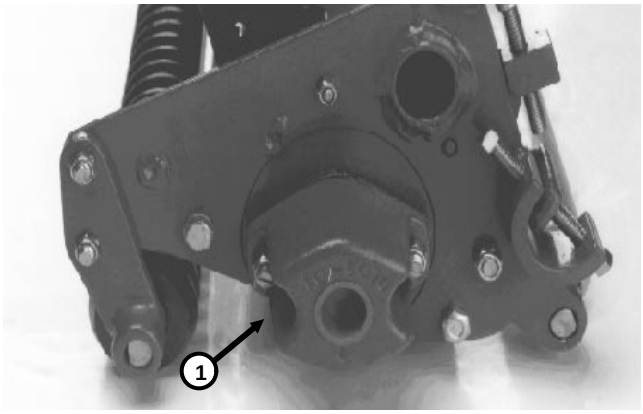

Figure 24

1. Counterbalance weight

Bedbar Removal and Installation

The rear roller assembly must be removed so the bedbar can be removed for bedknife sharpening.

1. Remove locknut securing rear roller height of cut bracket to side plate on both ends of cutting unit (Fig. 25).

2. Loosen allen head setscrews securing rear roller shaft to height of cut brackets.

3. Unthread height of cut adjustment bolts and remove them from both side plates.

4. Remove bedbar pivot bolts from each end of cutting unit. Loosen bedknife adjusting screws at each end of cutting unit. Remove the bedbar by rotating it away from the reel.

NOTE: For proper grinding of bedknife follow procedures in the Toro publication “Sharpening Reel & Rotary Mowers”, Form No. 80-300-PT.

5. Reverse steps 1 - 4 to install the bedbar.

IMPORTANT: When installing bedbar, be sure to assemble rear roller brackets UNDER arms of bedbar.

IMPORTANT: Securely seat the (2) bedbar pivot bolts to a maximum torque of 40 ft-lbs. Always check reel bearing adjustment after installing bedbar.

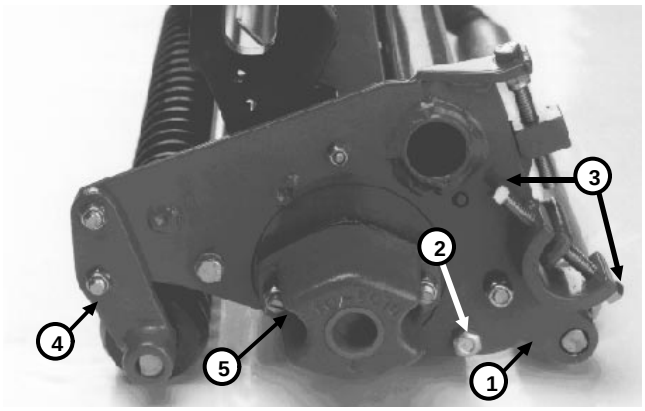

Figure 25

1. Rear roller height of cut bracket
2. Bedbar pivot bolt
3. Bedknife adjusting screws
4. Front roller brackets
5. Counterbalance end cap

Bedknife Replacement

1. Remove bedbar (see Bedbar Removal and Installation).

2. Remove bedknife screws and remove bedknife.

3. Remove all rust, scale and corrosion from bedbar surface before installing the new bedknife.

4. Install new bedknife with the proper bedknife screws (57-4910). Bedknife screws must bottom out on the bedknife, not the bedbar. Tighten the screws to a torque of 200 in-lb, working from the center toward each end of the bedbar (Fig. 26).

5. Grind the new bedknife to match it to the bedbar.

NOTE: For proper grinding of bedknife, follow procedures in the Toro publication “Sharpening Reel and Rotary Mowers”, Form No. 80-300-PT.

6. Install the bedbar.

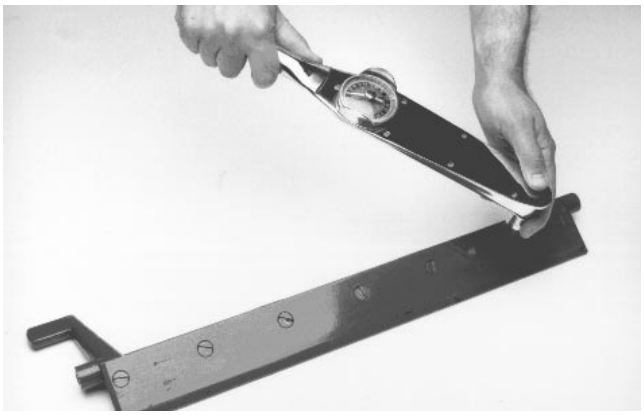

Figure 26

Preparing Reel For Grinding

IMPORTANT: Adjust reel bearings before grinding reel. (See Reel Bearing Service and Adjustment in the Adjustments section of this chapter.

1. Remove bedbar (see Bedbar Removal and Installation).

NOTE: Some reel grinders may require rear roller assembly be mounted to the cutting unit for proper support in reel grinder. Rear roller MUST be parallel to reel shaft to remove taper when grinding.

2. If necessary, remove front roller assembly.

   A. Remove locknuts securing front roller brackets to side plates at both ends of cutting unit (Fig. 27).

   B. Remove roller assembly by pulling evenly on both sides.

For proper grinding of reel, follow procedures in the Toro publication “Sharpening Reel & Rotary Mowers, Form No. 80-300-PT.

3. Install bedbar. After grinding, assemble cutting unit and do all adjustments. Back lap if necessary to get desired fit between reel and bedknife.

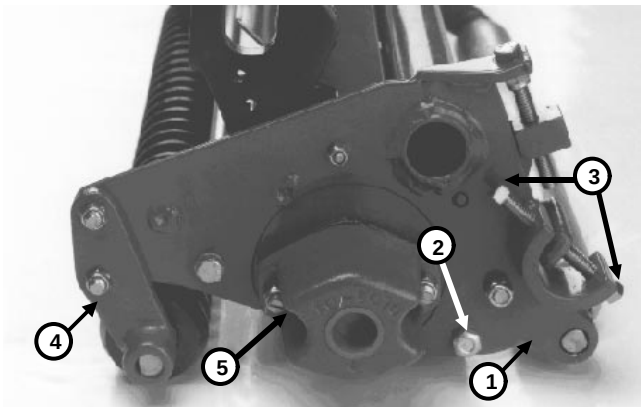

Figure 27

1. Rear roller height of cut bracket
2. Bedbar mounting bolts
3. Bedknife adjusting screws
4. Front roller brackets
5. Counterbalance end cap

Reel Removal and Bearing Replacement

1. Remove front and rear roller assemblies. Remove bedbar. Remove carrier frame.

2. Remove counterbalance end cap (Fig. 28). Remove large bearing adjustment nut from left hand end of reel shaft (Fig. 28) and special spline nut from opposite end of reel shaft.

3. Remove machine screws securing bearing housing on each end of cutting unit (Fig. 29). Machine screw heads will have to be cut off before screw can be completely removed:

A. Unscrew machine screw approximately two turns.
B. Cut head off of machine screw.
C. Use a screw driver to back out remaining part of screw from side plate (outwards, not inwards towards reel).

IMPORTANT: Remove grease fittings from bearing housing at each end of cutting unit. Note that 45° fitting is on right end and 90° fitting is at left end (when viewed in the direction of travel).

4. Use a plastic headed hammer to rotate bearing housing slightly, install bolts from outside of housing and turn bolts alternately against side plate to remove bearing housing (Fig. 30). Bearing housing will slip out of side plates and reel assembly can be removed as soon as bearing housings are disassembled from side plates.

5. Before installing reel, install new special machine screws and washers from inside of frame to secure bearing housing.

6. If necessary, install new bearings and seals:

A. Remove outer seal (in counterbalance weight), bearing cup, bearing cone and inner seal.

B. Bearing housing must be completely free of paint and foreign material before installing bearing cup. If necessary, remove any "flash" from bearing housing that may interfere with accurate seating of bearing. Install new inner seal. Install bearing cup.

C. Install bearing housing to frame. Pack bearing cone with grease and install over reel shaft into bearing cup. Install outer seal (in counterbalance weight).

8. Install bedbar. Install front and rear roller assemblies. Install carrier frame.

7. Tighten spline nut to 40 - 60 ft-lb, then adjust bearings (See Reel Bearing Service and Adjustment.)

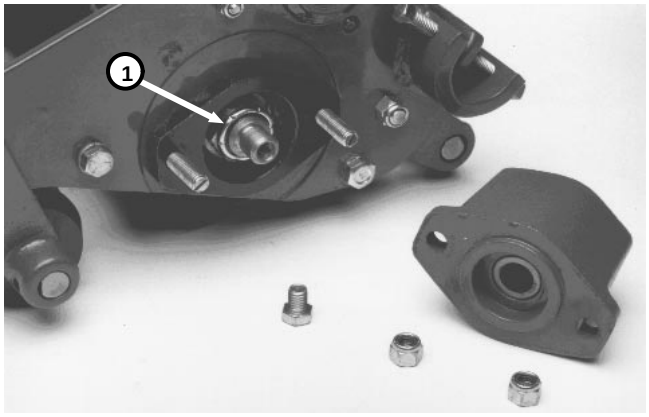

Figure 28

1. Reel bearing adjustment nut

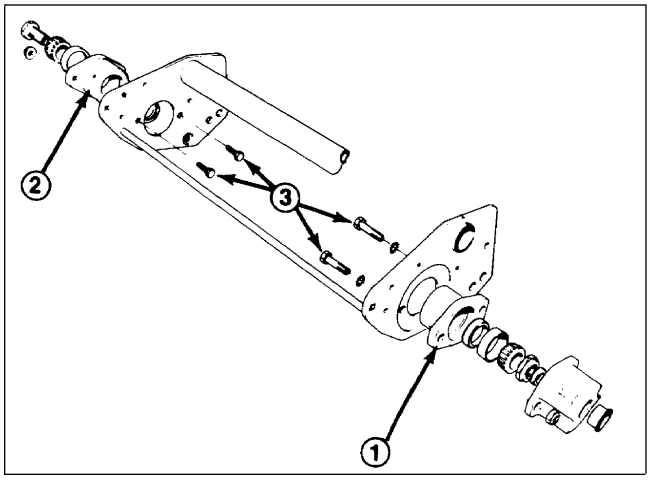

Figure 29

1. Left reel bearing housing
2. Right reel bearing housing
3. Machine screws

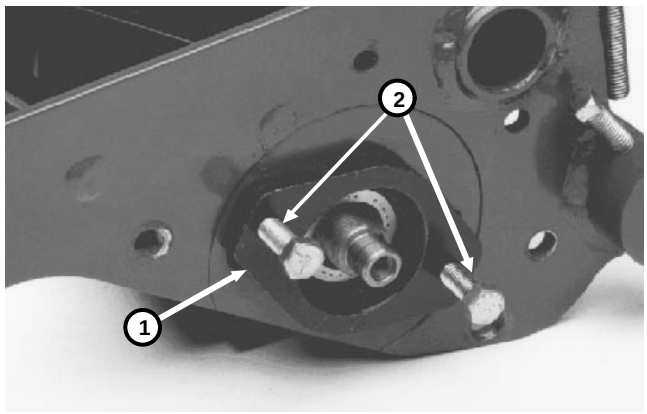

Figure 30

1. Bearing housing - rotate slightly
2. Bearing housing mount bolts - thread against side plate to remove housing

Lift Arm Spring Replacement

1. Put machine on a level surface, lower the cutting units, stop the engine, engage the parking brakes and remove key from ignition switch.

2. Remove floor plate in front of seat to get access to front springs or open hood to get access to rear springs.

CAUTION

Springs are under tension. Use caution when removing or adjusting.

3. Put an open end wrench on hex shaft of spring bracket.

NOTE: Because wrench can be moved only a limited distance, it may be necessary to use a second wrench to hold hex shaft while re-positioning other wrench for further rotation of hex shaft.

4. Remove capscrew and locknut securing retaining bracket, while rotating hex shaft to relieve spring tension, then rotate hex shaft to completely relieve spring tension.

5. Remove spring.

6. Install new spring.

7. Use an open end wrench to move spring bracket to desired position and install capscrew and locknut, while rotating hex shaft to relieve spring tension.

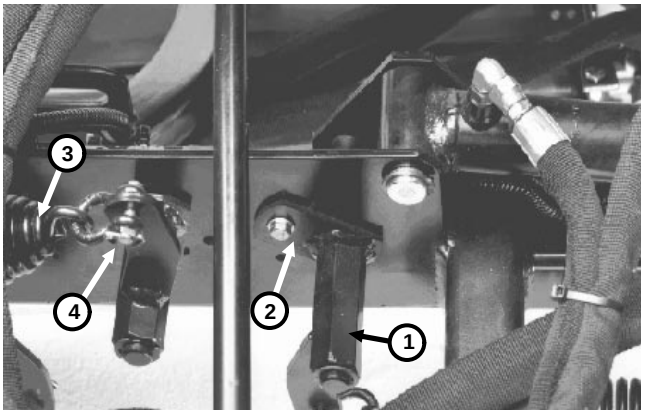

Figure 31

1. Spring bracket hex shaft
2. Retaining bracket
3. Spring
4. Clevis, clevis pin, and cotter pin

Chapter 9

4WD Rear Axle

Table of Contents

SPECIFICATIONS 2
GENERAL INFORMATION 3
Four-Matic™ 4WD
Over-Running Clutch Operation 3
ADJUSTMENTS 4
Rear Wheel Toe-in 4
REPAIRS 5
Drive Shaft Service 5
Rear Axle Removal and Installation 8
Axle Repair 9

Specifications

Item	Specification
Lubricant (Fig. 1, 2, 3)	SAE 80W90 gear lube
Rear wheel toe-in	1/8 inch
Wheel nut torque	45 - 55 ft-lb

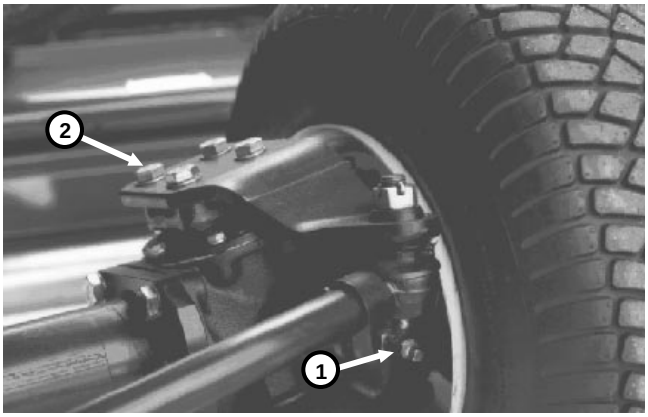

Figure 1
(Right-hand end of axle shown)

1. Check plugs (2) **2. Mounting bolts**

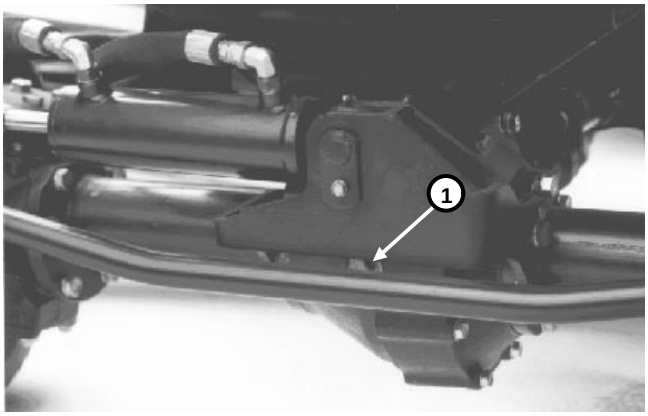

Figure 2

1. Check/fill plug

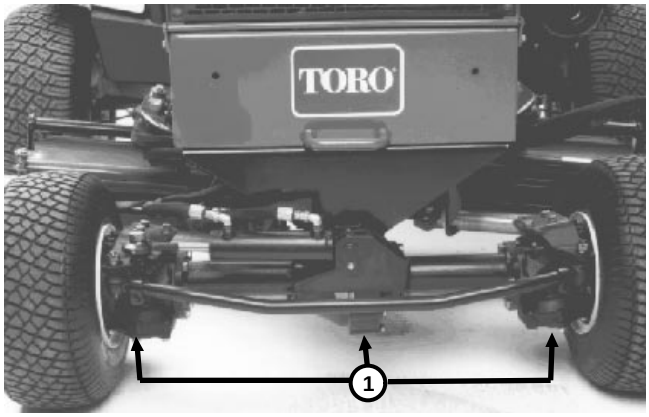

Figure 3

1. Drain plugs

Four-Matic™ 4WD Over-Running Clutch Operation

A drive shaft connected to the front axle provides power for the rear 4WD drive axle. The drive shaft tor the rear axle incorporates an OVER-RUNNING (ROLLER) CLUTCH THAT TRANSMITS POWER ONLY IN THE FORWARD DIRECTION (Fig. 4, 5).

Front and rear axle gear ratios and tire sizes were carefully selected so that during normal operation, the REAR AXLE PINION SHAFT TURNS SLIGHTLY FASTER THAN THE REAR AXLE DRIVE SHAFT.

Any time the front wheels begin to slip (such as when climbing a steep hill), the forward movement of the traction unit slows. This causes the rear axle pinion speed to slow down. As soon as the rear axle pinion is turning the same speed as the drive shaft, the roller clutch will engage and power will be transmitted from the drive shaft to the rear wheels – four wheel drive (Fig. 4).

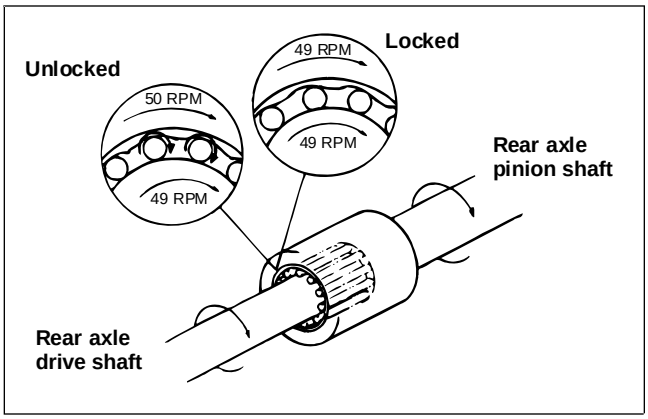

Figure 4

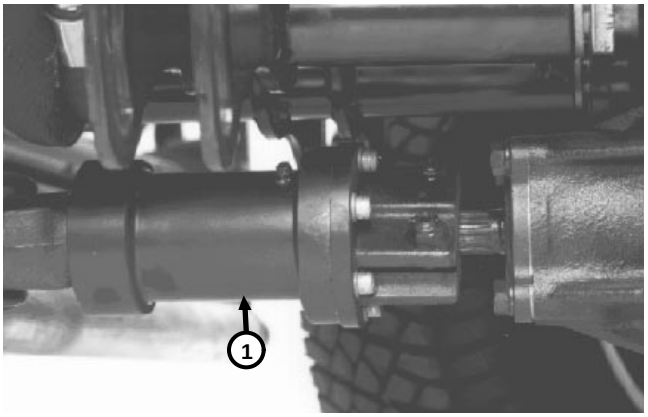

Figure 5

1. Over-running clutch

When the traction unit is turning, the rear wheels swing out in a larger arc and must travel faster than the front wheels. In this condition, the rear wheels and axle pinion shaft are turning faster than the drive shaft and the roller clutch is disengaged (Fig. 6).

NOTE: The Four-Matic four wheel drive system may not operate properly if the tires are replaced by different size tires, or if proper tire pressure is not maintained.

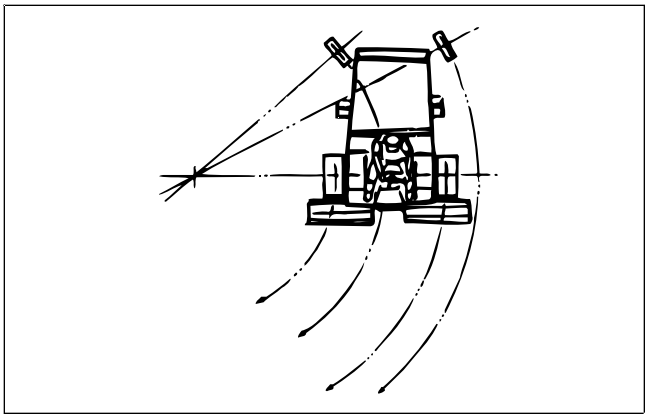

Figure 6

Rear Wheel Toe-in (Fig. 7)

1. Measure center–to–center distance (at axle height) at front and rear of steering tires. Front measurement must be 1/8 in. less than rear measurement.

2. To adjust, loosen clamps at both ends of tie rod.

3. Rotate tie rod to move front of tire inward or outward.

4. Tighten tie rod clamps when adjustment is correct.

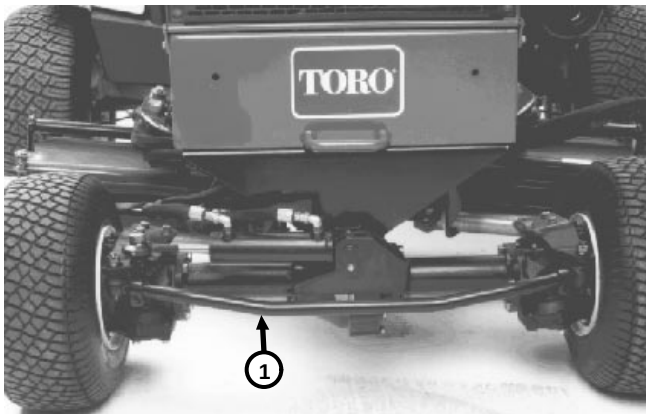

Figure 7

1. Tie rod

Drive Shaft Service

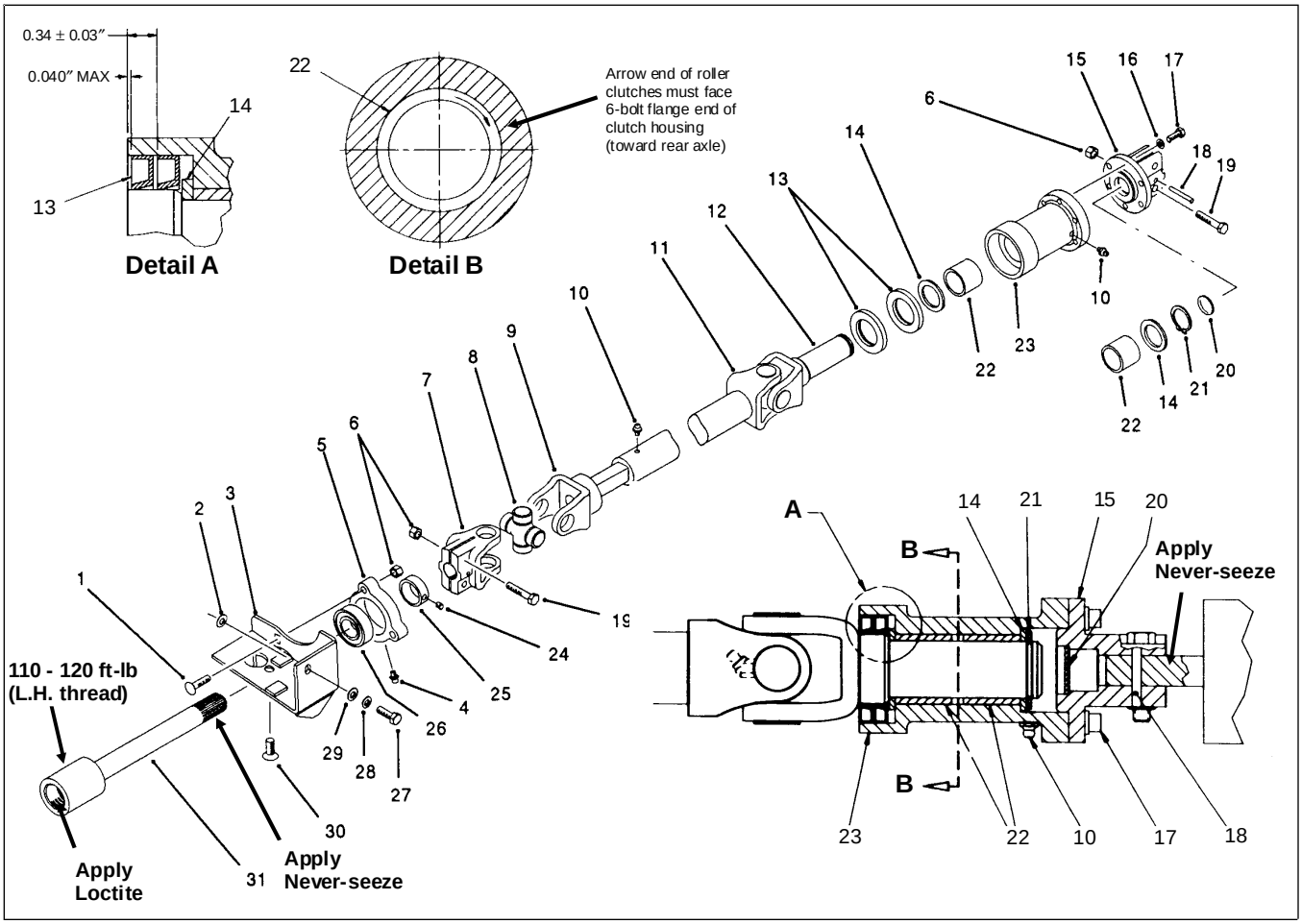

Figure 8

Removing Drive Shaft

1. Put machine on a level surface, lower cutting units, stop the engine and remove the key from the ignition switch. Block the rear wheels to prevent the machine from moving.

2. If front axle will be removed for repairs, first loosen traction shaft (Item 31) before removing drive shaft. To loosen traction shaft, use an open end wrench on square shaft of slip yoke (Item 9) and loosen by turning CLOCKWISE (left hand threads).

3. Use a hammer and punch to drive roll pin (Item 18) out of axle coupling (Item 15) and rear axle shaft. Loosen two (2) capscrews and locknuts securing coupling to axle shaft. Slide coupling off of shaft.

4. Loosen two (2) capscrews and locknuts securing end yoke (Item 7) to traction shaft spline (Item 31), then slide drive shaft yoke off of traction shaft.

Clutch Service

1. To disassemble clutch, remove six (6) capscrews (Item 17) and lockwashers (Item 16). Remove axle coupling (Item 15) from clutch housing (Item 23).

2. Remove retaining ring (Item 21). Clutch housing (Item 23), along with thrust washers (Item 14), roller clutches (Item 22) and seals (Item 13) can now be removed from yoke shaft (Item 12).

3. Inspect parts and replace as necessary.

4. Roller clutches (Item 22) must be installed into housing (Item 23) so end is flush to 0.040 in. inset with shoulder at each end of housing bore. Both roller clutches must be installed with arrow end toward 6-bolt flange end of housing as shown in view B - B.

5. Put thrust washer (Item 14) in housing adjacent to roller clutch as shown. Press both seals (Item 13) into end of housing to dimensions shown. Seals must be installed with lip facing out.

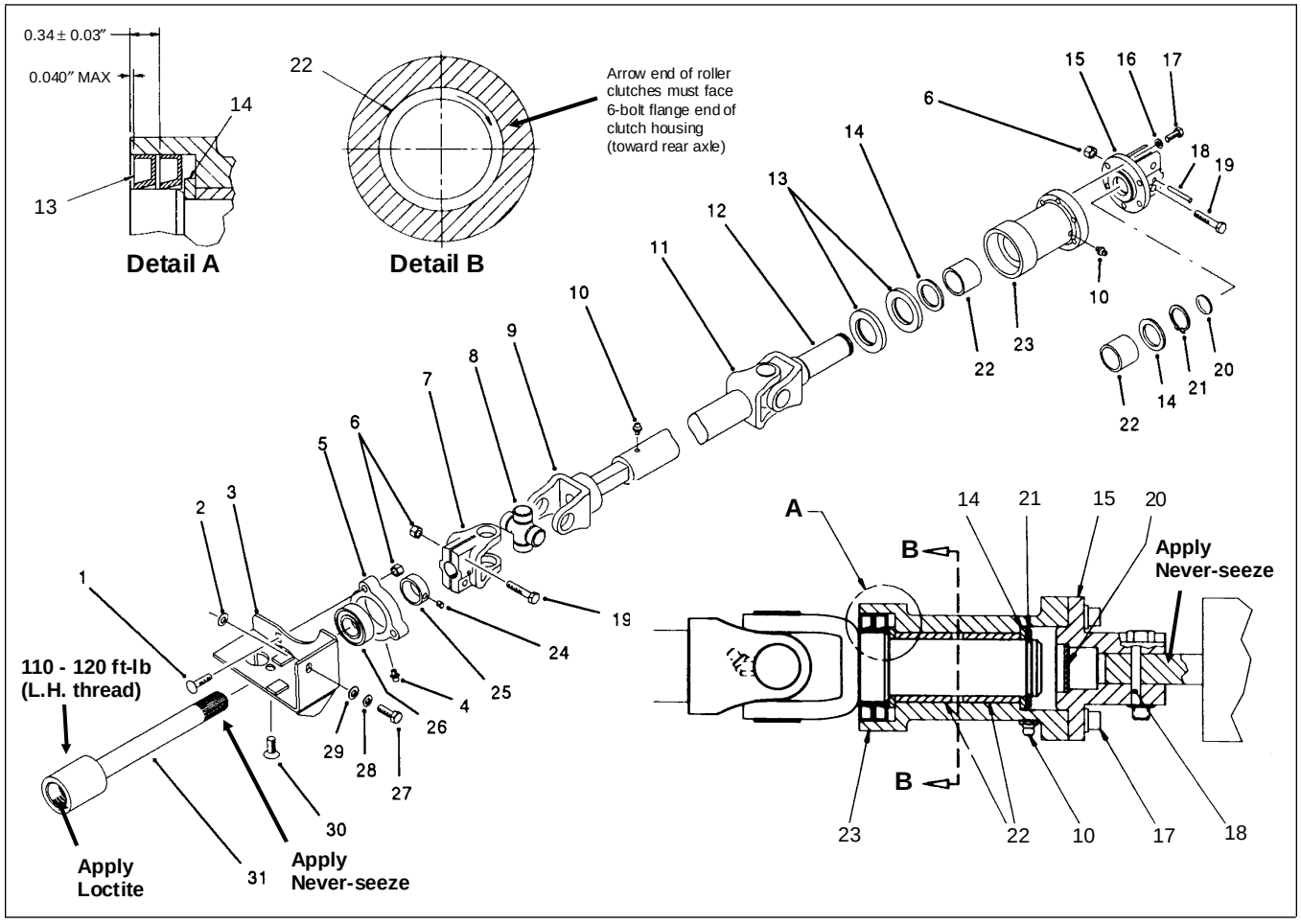

Figure 9

6. Install clutch assembly onto yoke shaft (Item 12), then install other thrust washer. Install retaining ring (Item 21) to secure clutch assembly to shaft. Install axle coupling (Item 15) to clutch housing with six (6) capscrews and lockwashers, then tighten capscrews evenly.

7. Lubricate clutch through grease fitting with No. 2 General Purpose Lithium Grease.

Removing Traction Shaft (Item 31)

NOTE: If traction shaft threads were not loosened, (as instructed in step 2 under Removing Drive Shaft) you will have to connect drive shaft to traction shaft so it can be loosened by turning it clockwise (left hand threads).

1. Loosen setscrew (Item 24). Use a hammer and punch to loosen locking collar (Item 25) by rotating it in a counterclockwise direction as viewed from rear of machine.

2. Remove three (3) locknuts (Item 6) securing bearing (Item 5) to bracket (Item 3). Remove three (3) carriage bolts (Item 1) and bearing (Item 5).

3. Remove traction shaft from differential axle pinion coupler by rotating it clockwise.

Installing Traction Shaft (Item 31)

1. Apply medium strength Loctite or equivalent to threads of pinion coupler on rear of differential axle.

2. Thread traction shaft (Item 31) (left hand thread) onto pinion coupler. Do not tighten traction shaft at this time.

3. If bracket (Item 3) was removed:

   Loosely mount bearing support (Item 5) to bracket (Item 3) with three (3) carriage bolts (Item 1) and locknuts (Item 6). Slide bearing bracket and bearing onto traction shaft, aligning the two (2) bearing bracket mounting holes with the holes in rear and bottom of hydrostatic transmission. Loosely mount bottom of bearing bracket to transmission with a 3/8-16 x 3/4 in. socket head screw (Item 30). Mount side of bracket to transmission with m8 x 1.25 x .25 capscrew (Item 27), m8 lockwasher (Item 28), m8 flat washer (Item 29) and 1 or 2 shims (Item 2). Determine whether 1 or 2 shims are required between bracket and transmission before tightening any fasteners. After shim(s) are in position on capscrew, tighten socket head screw and capscrew.

If bracket (Item 3) was not removed:

Slide bearing assembly onto traction shaft. Loosely mount bearing support (Item 5) to bracket (Item 3) with three (3) carriage bolts (Item 1) and locknuts (Item 6).

4. Slide locking collar (Item 25) onto traction shaft (Item 31). Do not tighten at this time.

Installing Drive Shaft.

1. Apply never-seize to splines of traction shaft and axle input shaft.

2. Slide clutch end of drive shaft onto rear axle shaft spline, aligning roll pin hole in shaft with hole in axle coupling (Item 15). Install roll pin (Item 18) through coupling and shaft.

3. Tighten two (2) capscrews (Item 19) and locknuts (Item 6) to secure coupling to shaft.

4. Slide yoke end (Item 7) of drive shaft onto traction shaft spline (Item 31).

5. Tighten two (2) capscrews (Item 19) and locknuts (Item 6) to secure yoke to shaft.

Do steps 6 - 9 only if traction shaft (Item 31) was removed:

6. Block front tires and jack up rear wheels of machine until there is approximately one inch clearance between rear tires and the ground. SECURELY BLOCK FRAME.

7. Using an open end torque wrench on square slip yoke shaft (Item 9) of drive shaft assembly, tighten traction shaft (counterclockwise) to a torque of 110 - 120 ft-lb.

8. Tighten locknuts (Item 6) securing bearing to bracket.

9. Rotate locking collar (Item 25) in a clockwise direction, as viewed from rear of machine. Tighten collar onto shaft by carefully rotating it with a hammer and punch. tighten set screw.

Rear Axle Removal and Installation

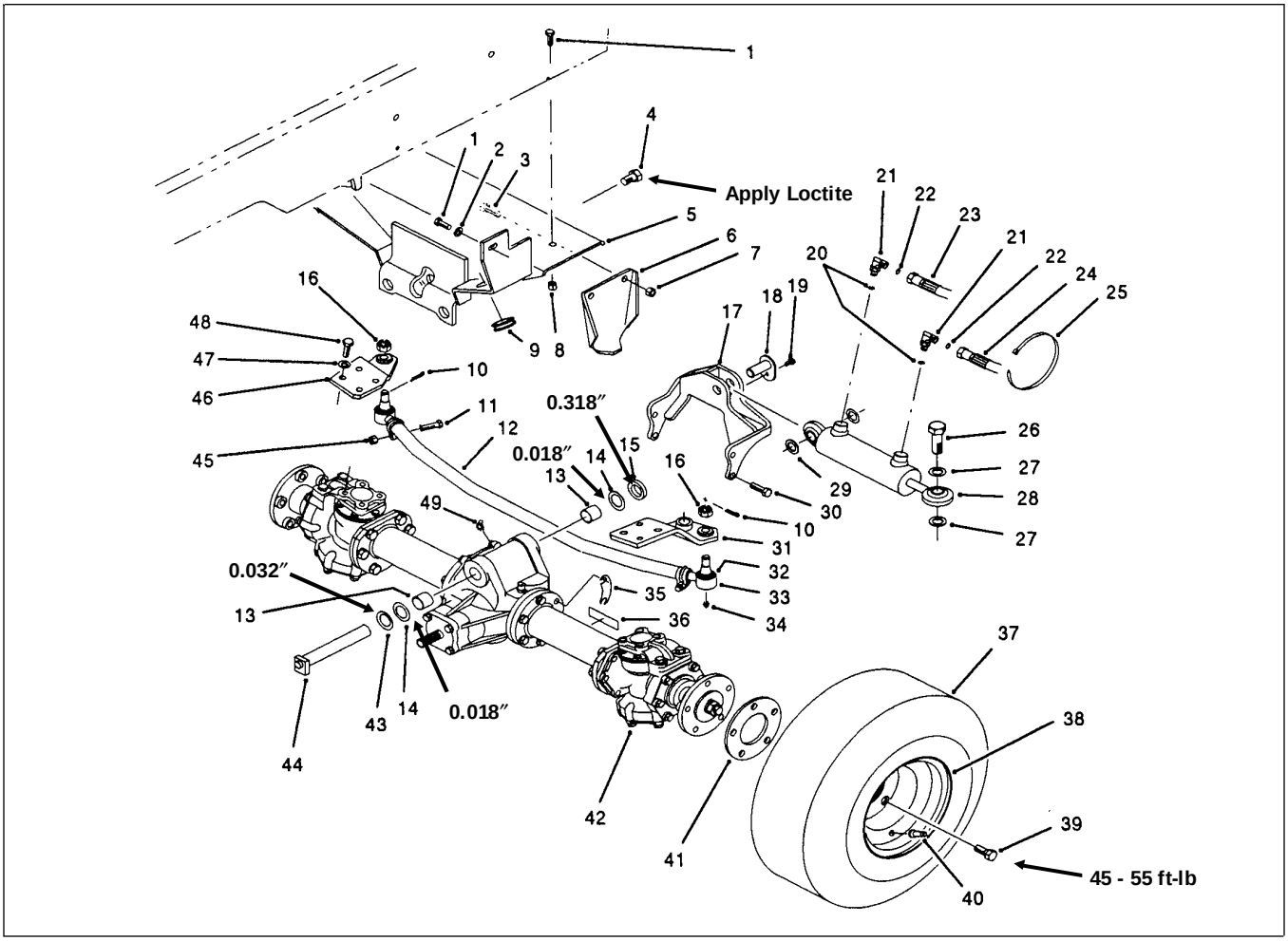

Figure 10

1. Remove drive shaft (see Drive Shaft Service).

2. Thoroughly clean around hydraulic hoses connections to steering cylinder. Mark hoses so they will be installed correctly during reassembly. Disconnect hoses from fittings on steering cylinder. Put plugs or caps on open hoses and fittings to prevent contamination of hydraulic system.

3. Loosen rear wheel capscrews (Item 39).

4. Block front tires and jack up rear of machine until there is approximately one inch clearance between rear tires and the ground. SECURELY BLOCK FRAME.

5. Remove rear wheels and wheel spacers (Item 41).

6. Remove capscrew (Item 4) from pin (Item 44). Remove pin (Item 44) from axle support, allowing axle to be lowered to floor and removed.

7. Reverse steps 1 - 7 to install axle.

Install washers (Items 14, 15, 43) between axle and axle support.:

Item 14 (qty. 2) is 0.018″ thick.
Item 15 is 0.318″ thick.
Item 43 is 0.032″ thick.

Apply medium strength locktite to capscrew (Item 4) before installing to secure pin (Item 44).

NOTE: To hold wheel spacer (Item 41) on hub when installing wheel, apply a small amount of grease to hub side of spacer before putting into position on hub.

Rear Axle Repair

Before disassembling axle, remove hydraulic cylinder (Fig. 9, Item 28), cylinder support (Item 17), tie rod tube and clamp assembly (Item 12) and steering arms (Items 46, 31).

Disassembly

1. Remove drain plugs (Fig. 11) and let oil drain out into containers.

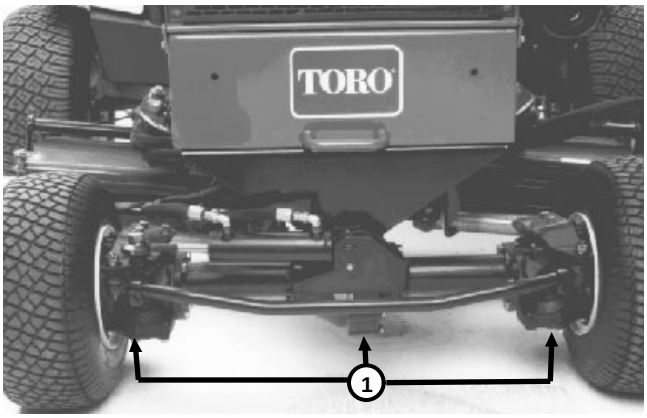

Figure 11

1. Drain plugs

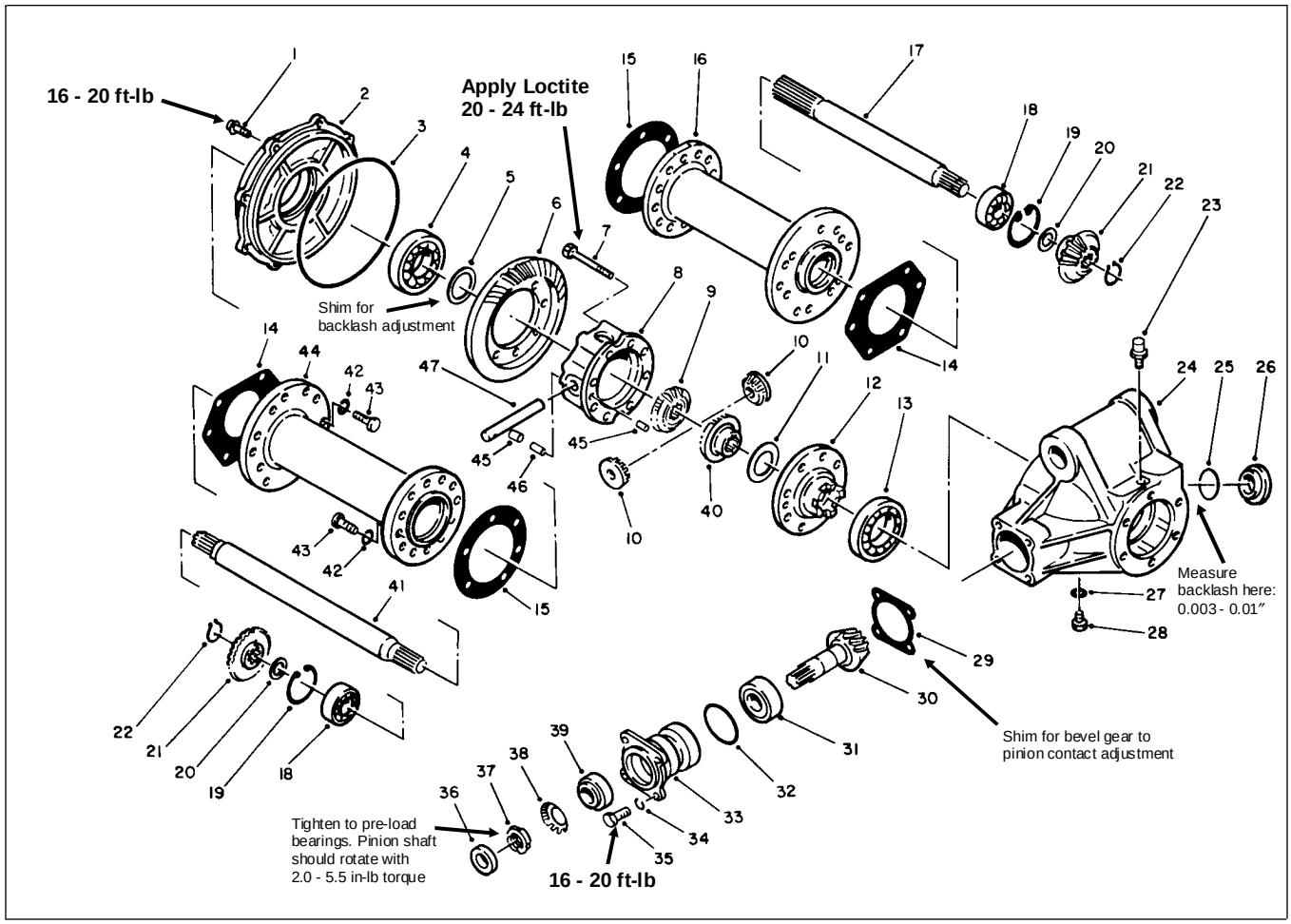

Figure 12

2. Remove bolts (Fig. 12, Item 43) securing axle tubes (Item 16, 44) to differential case (Item 24). Separate axle tubes and axles from differental case.

3. Remove bolts (Fig. 12, Item 43) securing axle tubes (Item 16, 44) to gearbox housings (Fig. 12, Item 23) of knuckle assemblies. Separate axle tubes and axles from knuckle assemblies.

4. Disassemble knuckle assembly (Fig .13):

A. Remove bolts (Item 28, 39) securing covers (Item 30, 26) to knuckle case (Item 28).

B. Pull out outer axle shaft (Item 35) and bevel gear (Item 5).

C. Remove capscrews (Item 10) securing knuckle arm (Item 8) to knuckle case (Item 28). Pull off knuckle arm toward upper side and pull off case toward bottom.

D. Remove capscrews (Item 13) and remove bearing retainer (Item 15). Remove bevel gear (Item 18) and knuckle pin (Item 20).

5. Disassemble differential case (Fig. 12):

A. Remove bolts (Item 35) and remove bearing case (Item 33) and pinion gear (Item 30) from differential case (Item 24).

B. Remove bolts (Item 1) and remove cover (Item 2). Remove differential assembly from differential case.

C. Remove bolts (Item 7) to disassemble differential.

Inspection

Inspect shaft splines, gears and bearings for wear and damage. Replace parts as necessary. Use suitable bearing pullers and an arbor press when replacing bearings.

NOTE: Ring gear (Item 6) and pinion (Item 30) are a matched set that must be replaced together.

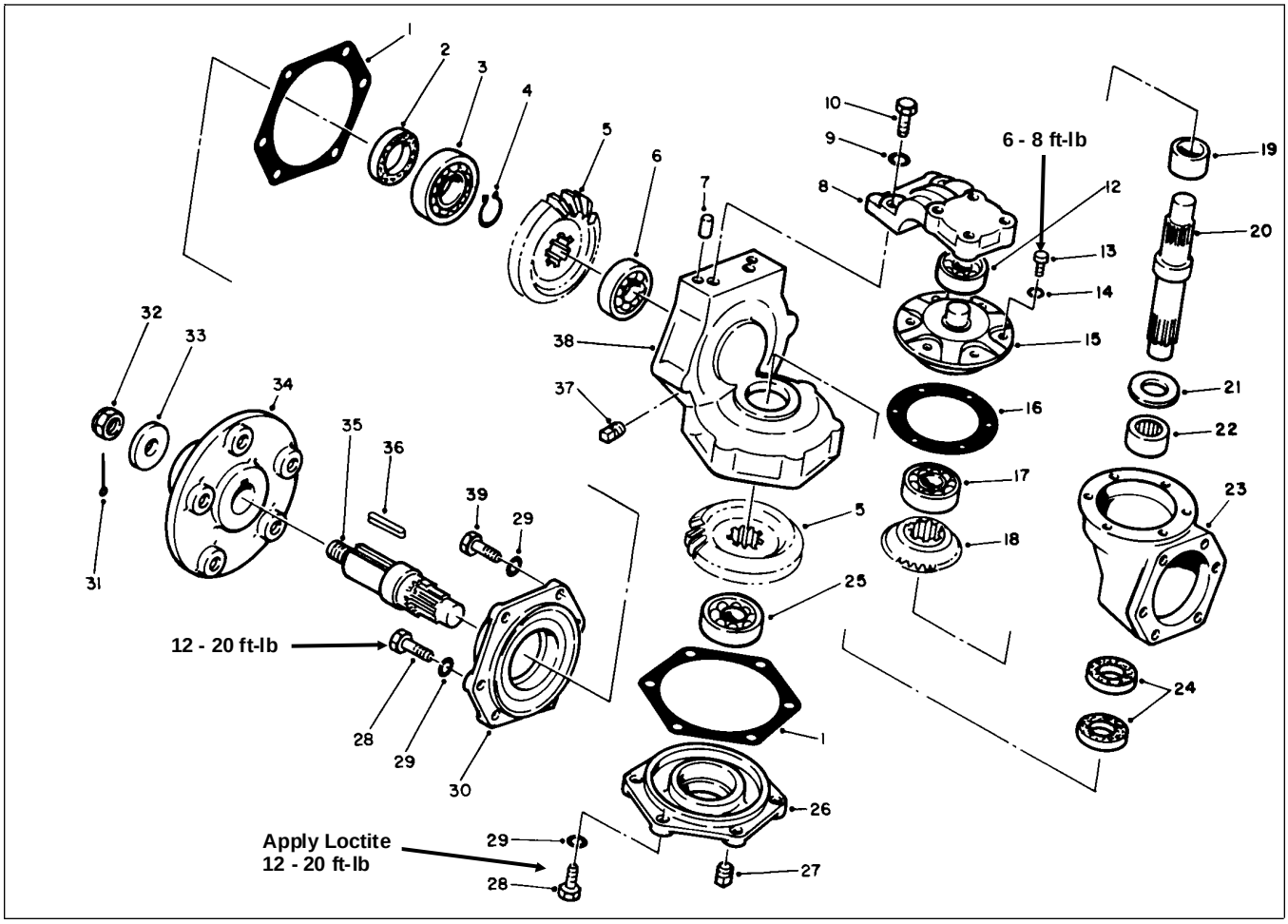

Figure 13

Assembly

1. Use new gaskets and seals when reassembling axle.

2. Assemble differential case (Fig. 12):

   A. Assemble differential. Use medium strength Loctite on bolts (Item 7) and tighten evenly to a torque of 20 - 24 ft-lb (270-330 Kg-Cm).

   B. Assemble pinion gear (Item 30) and bearing case (Item 33). Tighten bearing nut (Item 37) to pre-load tapered roller bearings. Tighten so pinion shaft will rotate with 2 - 5.5 in-lb (2.0 - 6.5 Kg-Cm) of torque. Bend washer (Item 38) to prevent nut from loosening. Install oil seal (Item 36).

   C. Adjust tooth contact of bevel gear (Item 6) to pinion (Item 30). Use shims (Item 29) to make good contact with light load between bevel gear and pinion (Fig. 13).

   D. After adjusting tooth contact, use shims (Item 5) to make backlash 0.003 - 0.01 in. (0.08 - 0.25 mm). Check backlash through plug hole (Item 26) with a dial indicator.

   E. Tighten bolts (Item 1, 35) to a torque of 16 - 20 ft-lb (220-280 Kg-Cm).

3. Assemble knuckle assembly (Fig. 13):

   A. Insert needle bearing (Item 22), washer (Item 21), knuckle pin (Item 20), spacer (Item 19) and bevel gear (Item 18) into axle gear box (Item 23). Fasten bearing retainer (Item 15) with bolts (Item 13) and tighten bolts evenly to a torque of 6 - 8 ft-lb (80-120 Kg-Cm).

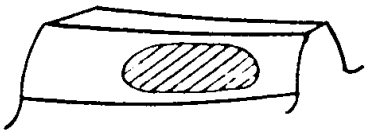

Tooth contact between bevel gear and pinion with light load

Figure 14

B. Assemble knuckle pin (Item 20) and knuckle case (Item 38) to match knuckle arm (Item 8) with knuckle pin. Fasten capscrew (Item 10) temporarily (will be removed to fill with lubricant).

C. Assemble wheel shaft (Item 35) to cover (Item 30).

D. Assemble gear (Item 5) to wheel shaft and install cover and wheel shaft assembly to knuckle case (Item 38). Note that top two (2) capscrews (Item 39), securing cover (Item 30) are a shorter length.

E. Install bevel gear (Item 5) to knuckle pin and install cover (Item 26) to knuckle case (Item 38). Use medium strenght Loctite on capscrews (Item 28) securing cover (Item 26).

F. Evenly tighten capscrews (Item 28, 39) securing covers to a torque of 12 - 20 ft-lb (170-280 Kg-Cm).

4. Install axle on machine (see Rear Axle Removal and Installation).

5. Fill axle with proper lubricant to level of check plugs (see Specifications).

This page is blank.



Commercial Products

© The Toro Company