FORM NO. 3316–928

TORO®

MODEL NO. 20801BC–4900001 & UP

PARTS CATALOG

48cm RECYCLER® MOWER

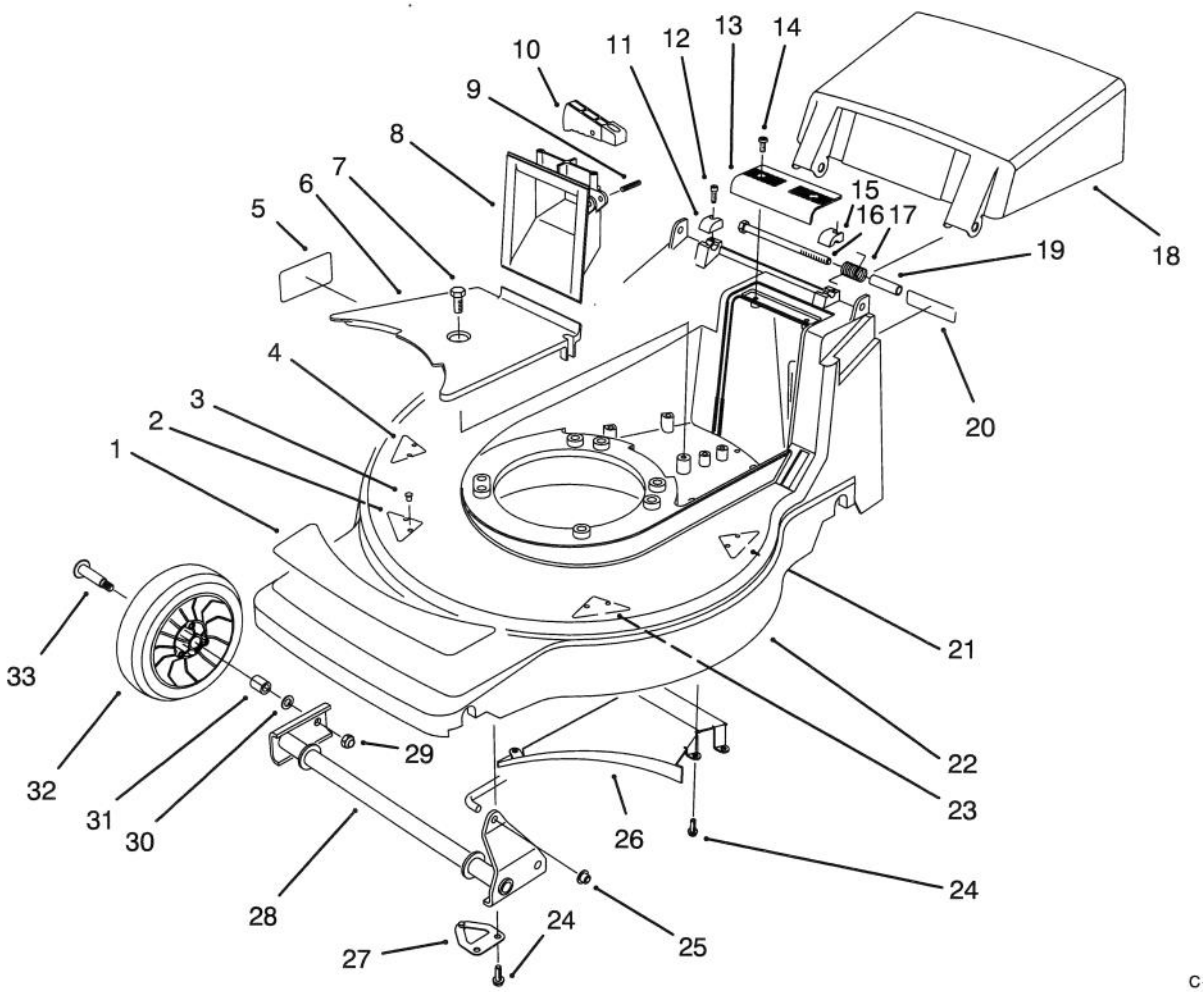

C–2003

HOUSING ASSEMBLY

Ref. No.	Part No.	Description	No. Used
1	92–7863	Decal – Deck	1
2	71–8920	Kicker – Front Right	1
3	32144–111	Screw – Phillips Hd.	8
4	71–9230	Kicker – Rear Right	1
5	92–9077	Decal – DIN	1
6	71–7920	Cover – Belt	1
7	32144–70	Screw – Tapping	1
8	71–7870	Grip – Lower	1
9	3284–5	Pin – Groove	1
10	71–7930	Trigger – H.O.C.	1
11	71–7910	Cap – Bolt Hinge R.H.	1
12	65–5210	Screw – Thread Forming	2
13	71–7860	Grip – Upper	1
14	32144–97	Screw – Phillips Hd.	2
15	71–7900	Cap – Bolt Hinge L.H.	1
16	322–29	Screw – Hex Hd. Cap	2
17	71–9840	Spring – Door	2
18	71–9800	Door – Discharge	1

Ref. No.	Part No.	Description	No. Used
19	71–8580	Spacer – Door	2
20	66–0680	Decal – French Regulation	1
21	71–9250	Kicker – Rear Left	1
†22	16–5989	Housing – Deck (Incl. Ref. #2–5, 20, 21, & 23)	1
23	71–9440	Kicker – Front Left	1
24	32144–4	Screw – Tapping	8
25	32112–11	Nut – Push	1
26	71–7990	Ramp – Discharge	1
27	71–8830	Retainer – Shaft	2
28	71–7820	Pivot – Front	1
29	3296–5	Nut – Lock	2
30	40–1940	Washer	2
31	27–6250	Bushing	2
32	46–1113	Wheel & Tire Assembly 7"	2
33	27–6230	Bolt – Wheel	2

† Obtain From Toro Europe N.V.

Copyright 1994 The Toro Company
All Rights Reserved

TPS

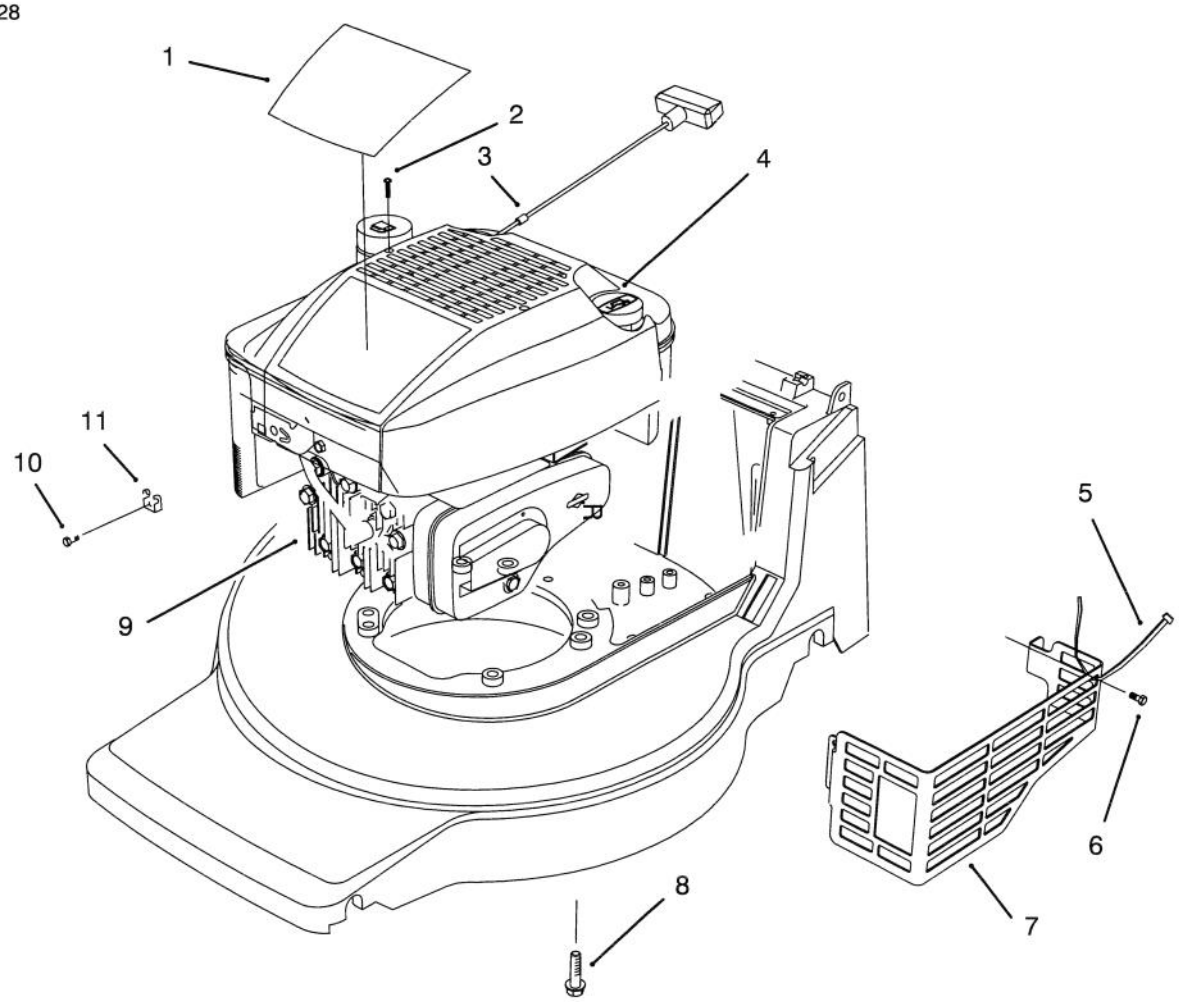

C–2004

ENGINE ASSEMBLY

Ref. No.	Part No.	Description	No. Used
1	92–7864	Decal – Engine	1
2	92–7887	Screw – Mounting	2
3	2210–316	Stop – Rope	1
4	92–7886	Shroud – Engine	1
5	3290–378	Tie – Cable	1
6	32144–73	Screw – Hex Washer Hd. Thread Forming	3

Ref. No.	Part No.	Description	No. Used
7	92–7852	Shield – Muffler	1
8	32144–102	Screw – Engine	3
9		Engine	1
10	86–7990	Screw – Clamp	1
11	2210–249	Clamp – Casing	1

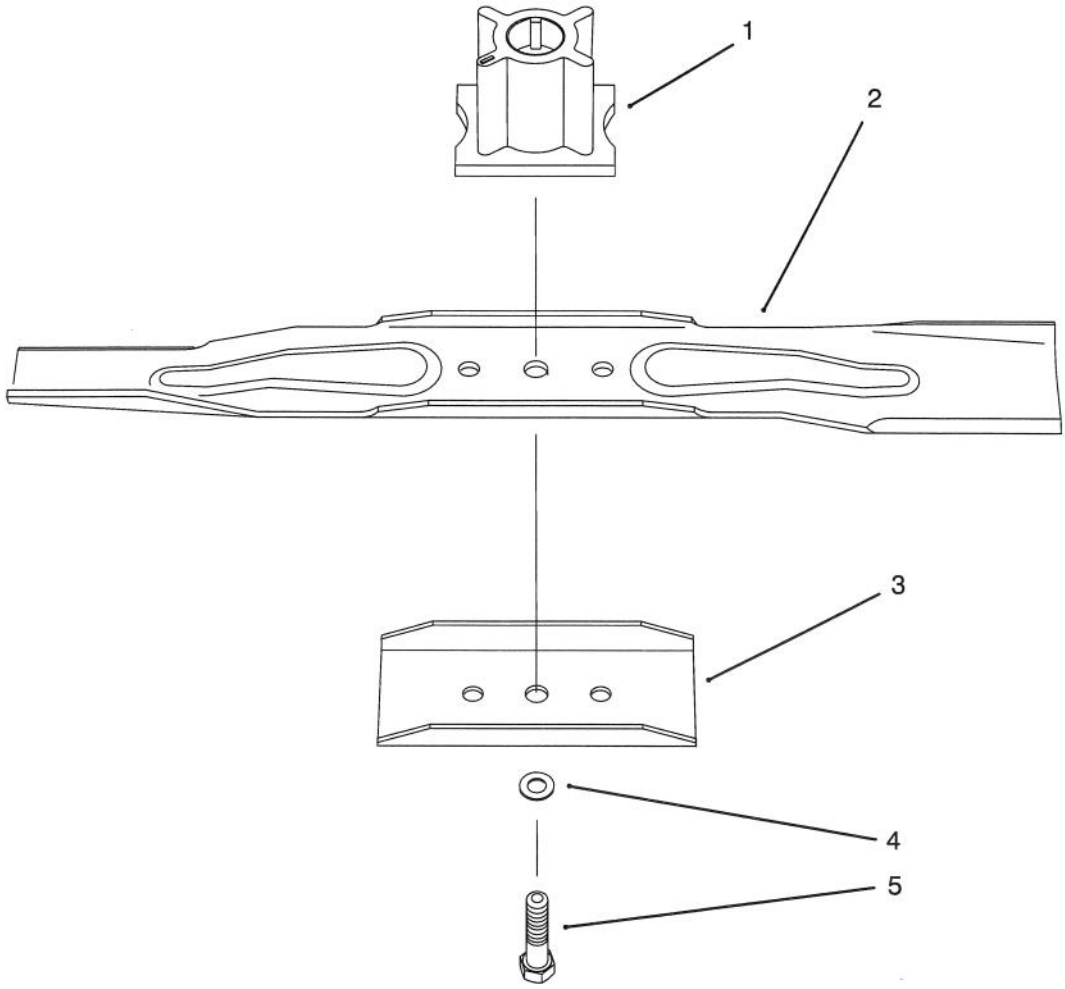

C–2005

BLADE ASSEMBLY

Ref. No.	Part No.	Description	No. Used
1	71–7940	Retainer – Blade	1
2	71–9260	Blade – 48cm Recycler	1
3	80–0510	Stiffener – Blade	1
4	3253–22	Washer – Lock	1
5	26–0672	Bolt – Blade	1

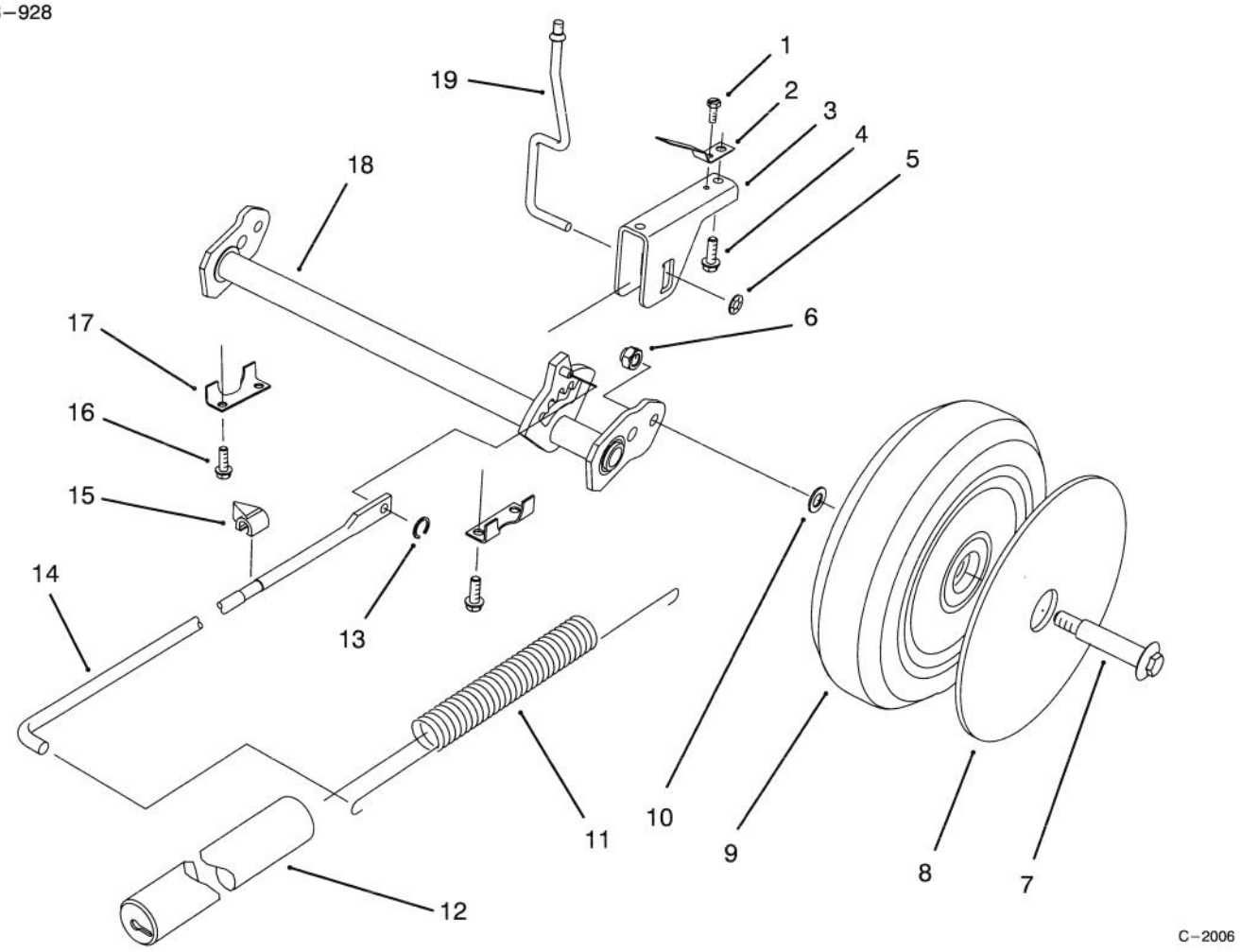

REAR AXLE ASSEMBLY

Ref. No.	Part No.	Description	No. Used
1	32144–31	Screw – Tapping	1
2	71–8060	Spring – Trigger Ret.	2
3	71–8080	Saddle – H.O.C.	1
4	63–8590	Screw	2
5	32112–13	Nut – Push	1
6	3296–5	Nut – Lock	2
7	27–6230	Bolt – Wheel	2
8	92–7663	Cover – Wheel	1
9	14–9949	Wheel & Tire Assembly	2
10	40–1940	Washer	2

Ref. No.	Part No.	Description	No. Used
11	71–7740	Spring – Counterbalance	1
12	71–8450	Cover – Spring	1
13	32151–93	Ring – Grip	1
14	71–7970	Rod – Link	1
15	71–7980	Indicator – H.O.C.	1
16	32144–4	Screw – Tapping	4
17	71–7770	Plate – Securing Rear	2
18	71–7800	Arm – Pivot	1
19	71–7840	Rod – Trigger	1

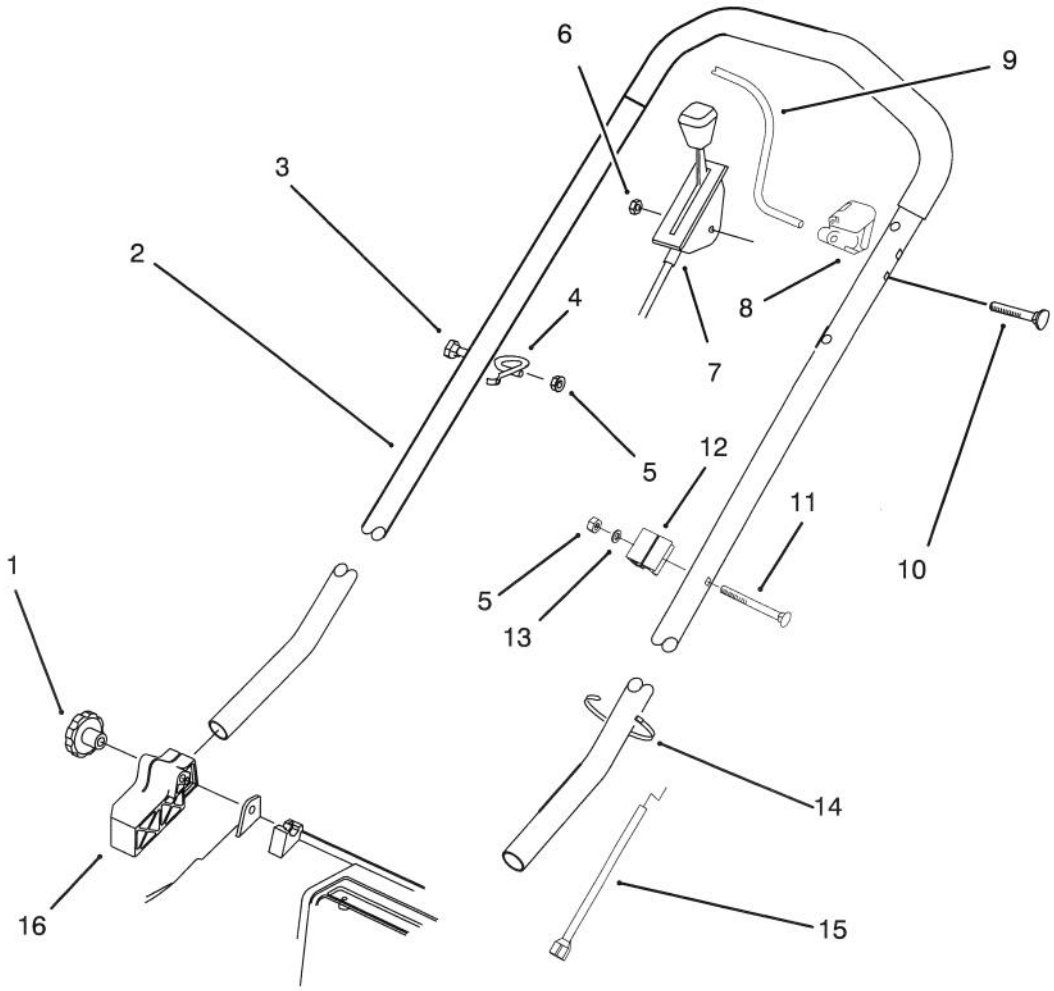

C–2080

HANDLE ASSEMBLY

Ref. No.	Part No.	Description	No. Used
1	19–4050	Knob	2
2	71–9024	Handle	1
3	46–6435	Screw – Handle	1
4	46–8081	Guide – Rope	1
5	3296–42	Nut – Lock	2
6	3296–56	Nut – Lock	1
7	93–1118	Control – Throttle	1
8	92–5412	Stop – Pivot	1
9	93–0336	Bail – Control	1

Ref. No.	Part No.	Description	No. Used
10	46–6430	Screw – Handle	1
11	46–6432	Screw – Handle	1
12	46–6980	Support – Cable	1
13	3256–22	Washer – Flat	1
14	3290–378	Tie – Cable	1
15	93–1116	Cable – Brake	1
16	71–8100	Mount – Handle R.H.	1
*	71–8090	Mount – Handle L.H.	1

*Not Illustrated

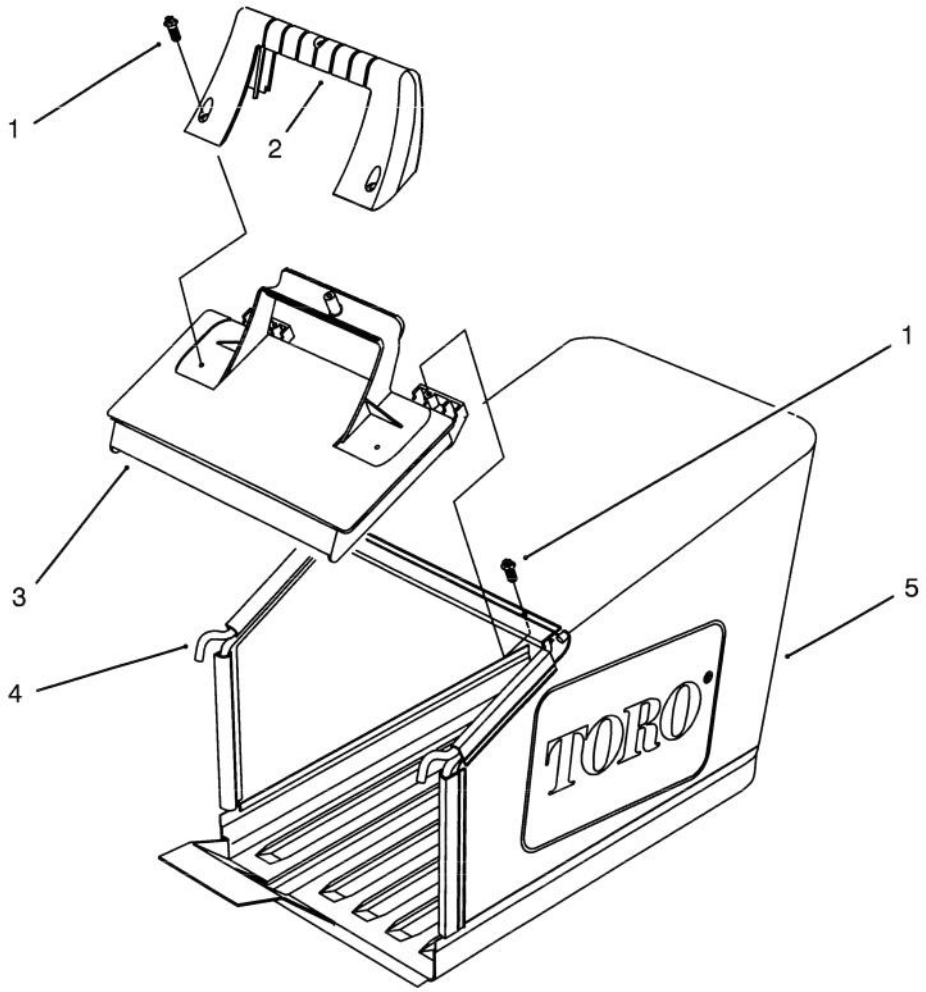

C–1509

GRASS BAG ASSEMBLY

Ref. No.	Part No.	Description	No. Used
1	32144–111	Screw – Thr'd Form	5
2	71–9480	Handle – Door	1
3	71–9470	Door – Bag	1
†4	71–9900	Frame – Bag	1
5	71–9460	Bag – Grass	1

† Obtain From Toro Europe N.V.

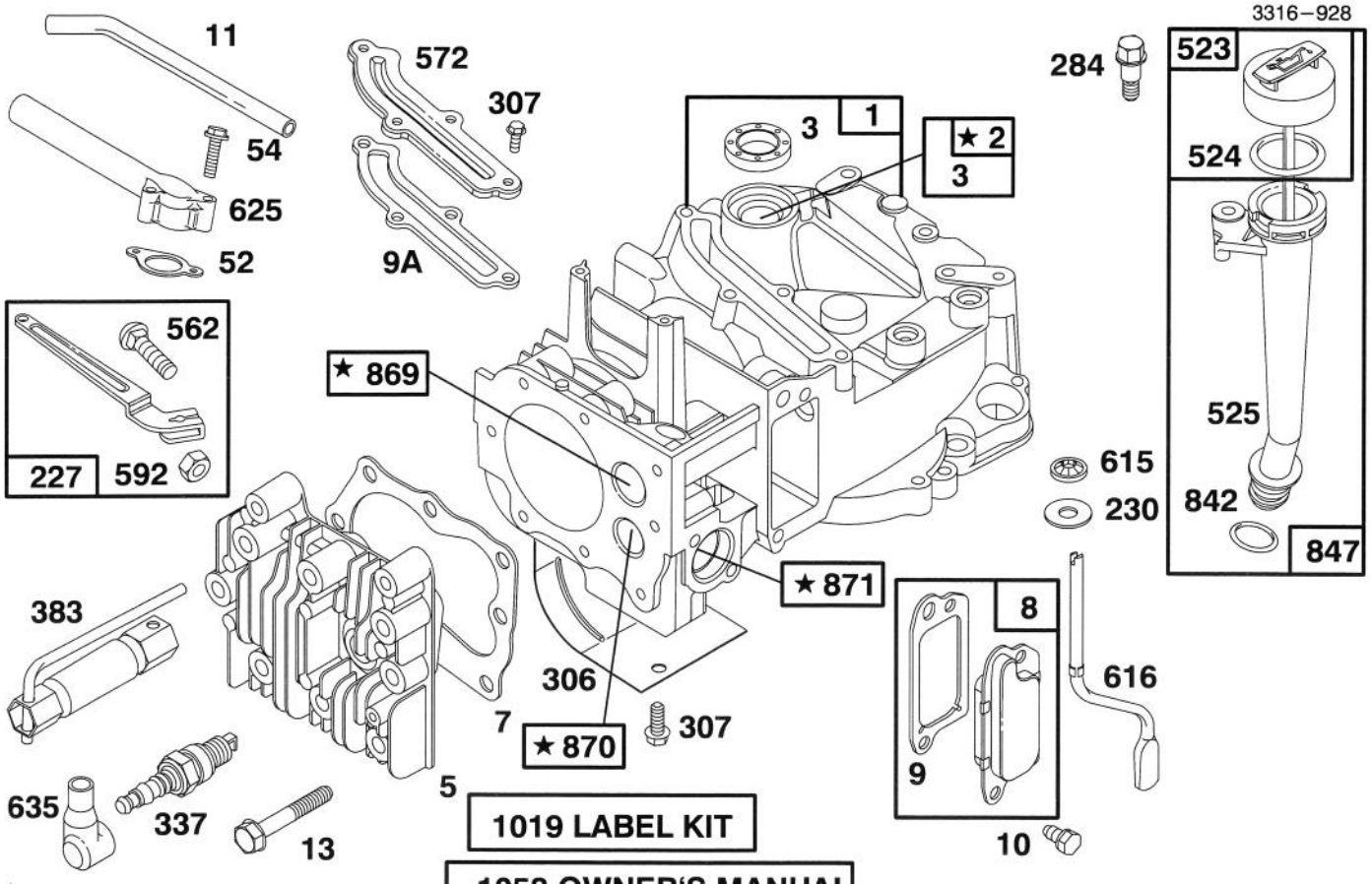

★ REQUIRES SPECIAL TOOLS TO INSTALL. SEE REPAIR INSTRUCTION MANUAL.

Assemblies include all parts shown in frames.

ENGINE BRIGGS & STRATTON MODEL 127802-0514-21

Ref. No.	Part No.	Description	No. Used
1	493260	Cylinder Assembly	1
2	293708	Bushing – Cylinder	1
★3	299819	Seal – Oil	1
5	213861	Head – Cylinder	1
★7	272200	Gasket – Cylinder Head	1
8	495786	Breather – Valve Chamber	1
★9	272481	Gasket – Valve Cover	1
★9A	272238	Gasket – Baffle Plate	1
10	94650	Screw – Breather Mtg.	1
11	231933	Tube – Breather	1
13	94547	Screw – Cylinder Head	1
★52	272199	Gasket – Intake Elbow	1
54	94526	Screw – Intake Elbow Mtg.	1
227	492349	Lever Assembly – Gov.	1
230	67072	Washer – Gov. Crank	1
284	94511	Screw – Hex. Head	1
306	224324	Shield – Cylinder	1
307	94515	Screw – Hex. Head	1
337	802592	Plug – Spark	1
383	89838	Wrench – Spark Plug	1

Ref. No.	Part No.	Description	No. Used
523	495264	Cap With Dipstick – Oil Filler	1
★524	280393	Seal – Filler Tube	1
525	495265	Tube – Oil Filler	1
562	92613	Bolt – Governor Lever	1
572	224328	Baffle – Cylinder	1
592	231082	Nut – Hex.	1
615	94474	Fastener	1
616	262578	Crank – Governor	1
625	281085	Tube – Fuel Intake	1
635	66538	Elbow – Spark Plug	1
★842	280966	Seal – O-Ring	1
847	495263	Oil Fill Tube and Dipstick Assy.	1
869	213512	Seat – Intake Valve	1
870	213513	Seat – Exhaust Valve	1
871	262001	Guide – Exhaust Valve **Note:** 63709 Guide – Intake Valve	1
1019	494256	Label Kit	1
1058	272262	Owner's Manual	1

★ Included in Gasket Set–Part No. 496117.

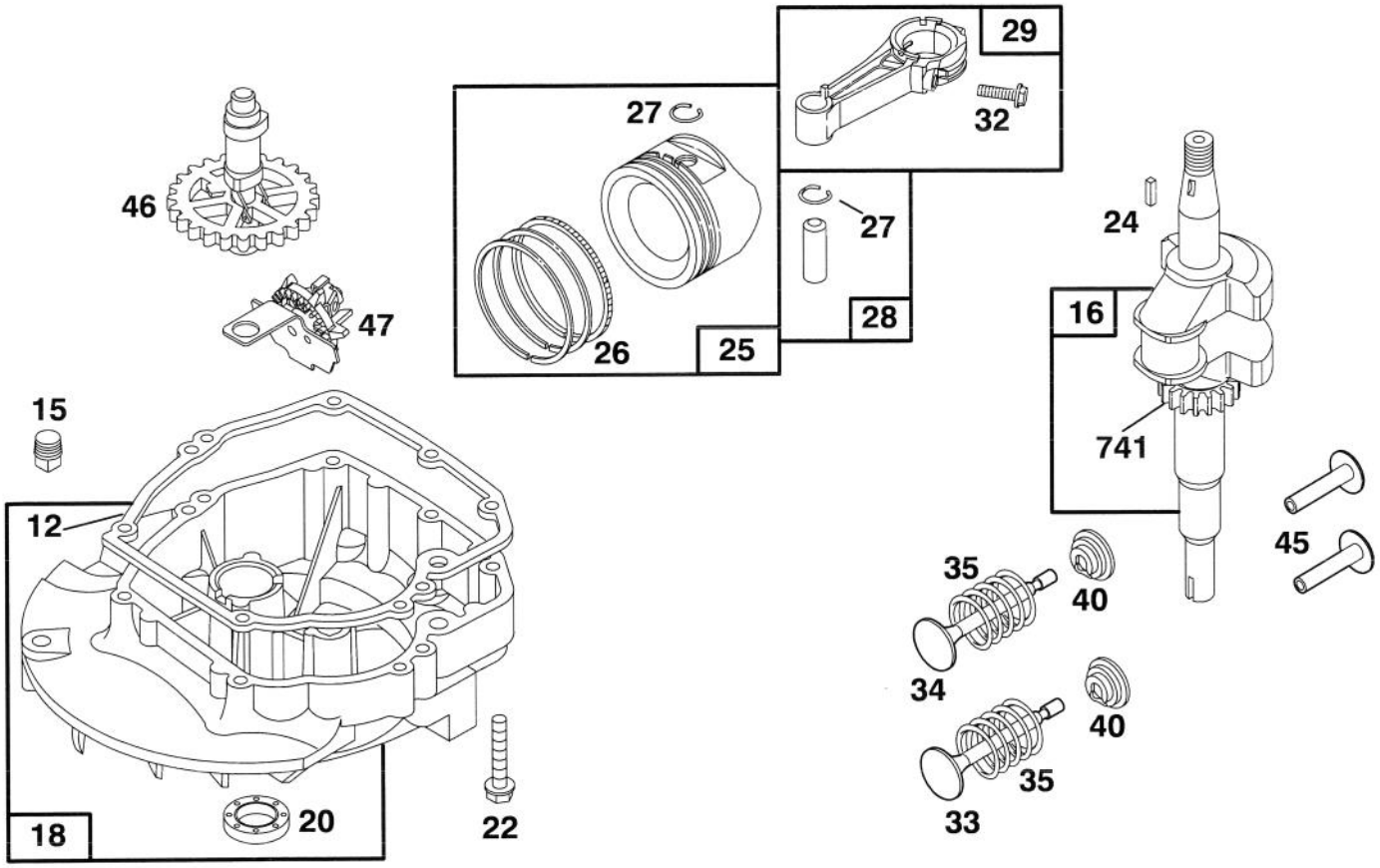

Assemblies include all parts shown in frames.

ENGINE BRIGGS & STRATTON MODEL 127802-0514-21

Ref. No.	Part No.	Description	No. Used
★12	272198	Gasket – Crankcase	1
15	94720	Plug – Oil Drain	1
16	494546	Crankshaft	
		Note: Order 94388 For Timing Gear Key.	1
18	493279	Sump – Engine	1
★20	399781	Seal – Oil	1
22	94220	Screw – Hex. Head	1
		Note: 94612 Screw – Hex. Head (One (1) Used in Hole Nearest Breather.)	1
24	222698	Key – Flywheel	1
25	493262	Piston Assy. (Standard)	1
	493385	Piston Assy. (.010" O.S.)	1
	493386	Piston Assy. (.020" O.S.)	1
	493387	Piston Assy. (.030" O.S.)	1
26	493261	Ring Set (Standard)	1
	493388	Ring Set (.010" O.S.)	1
	493389	Ring Set (.020" O.S.)	1
	493390	Ring Set (.030" O.S.)	1

Ref. No.	Part No.	Description	No. Used
27	26026	Lock – Piston Pin	1
28	298909	Pin – Piston (Standard)	1
	298908	Pin – Piston (.005" O.S.)	1
29	490566	Rod Assembly – Conn.	1
		Note: For Conn. Rod With .020" Undersize Crankpin Bearing – Order No. 490743.	1
32	94699	Screw – Connecting Rod	1
33	262651	Valve – Exhaust	1
34	262652	Valve – Intake	1
35	262224	Spring – Valve	1
40	93312	Retainer – Valve Spring	1
45	262204	Tappet – Valve	1
46	492828	Gear – Cam	1
47	493737	Slinger – Oil	1
741	262598	Gear – Timing	1

★ Included in Gasket Set–Part No. 496117.

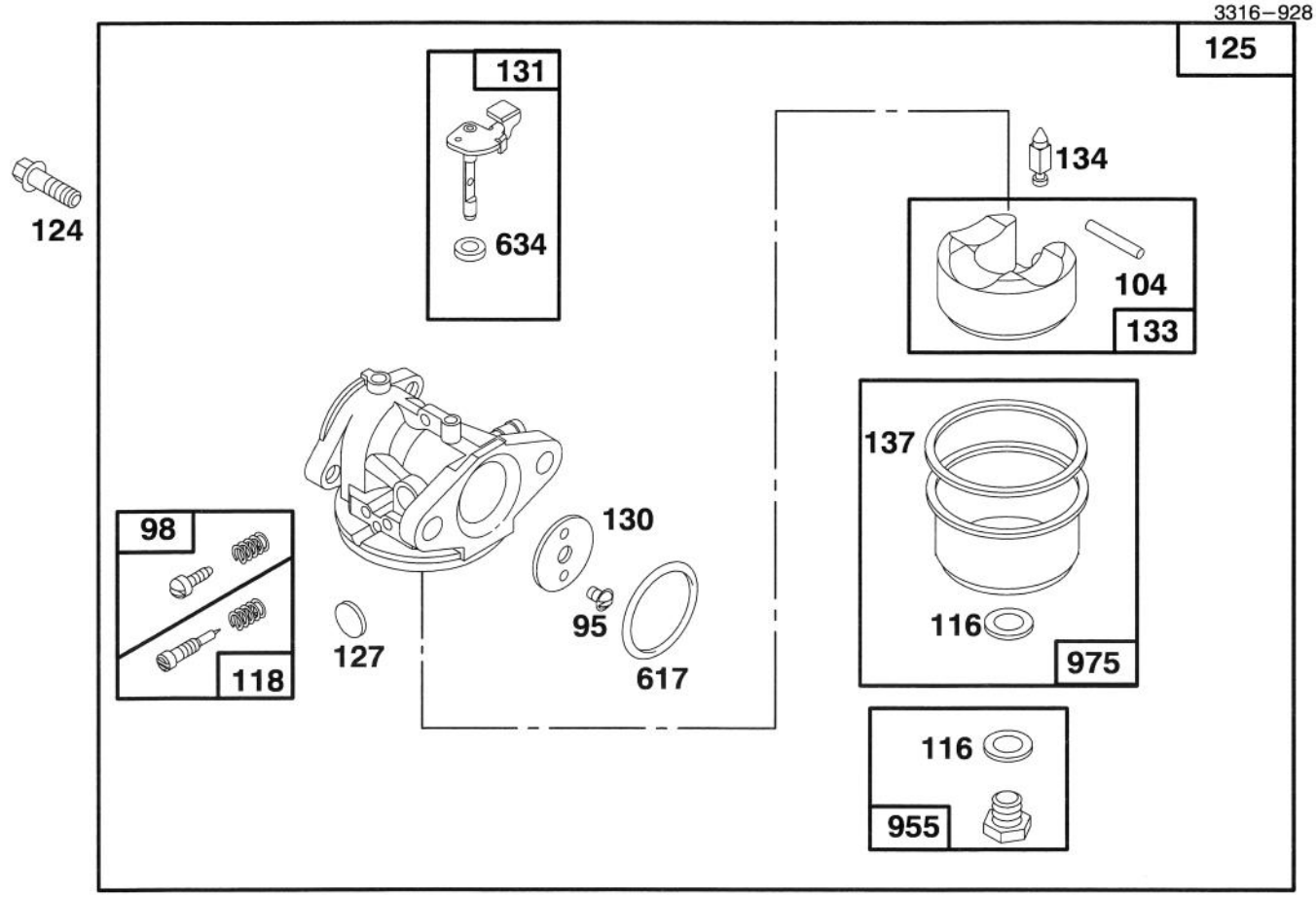

Assemblies include all parts shown in frames.

ENGINE BRIGGS & STRATTON MODEL 127802-0514-21

Ref. No.	Part No.	Description	No. Used
95	94098	Screw – Throttle Valve Mounting	1
98	398185	Screw – Idle Adjustment	1
●104	231371	Pin – Float Hinge	1
●◆116		Gasket–Sealing (Sold in Kit Only)	1
●118	493765	Valve – Needle	1
124	94525	Screw – Carburetor Mtg.	1
125	496114	Carburetor	1
●127		Plug – Welch (Sold in Kit Only)	1
130	223470	Valve – Throttle	1
131	493267	Shaft – Throttle	1

Ref. No.	Part No.	Description	No. Used
133	398187	Float Assy. – Carburetor	1
●134	398188	Valve – Inlet (Includes Seat)	1
●◆137		Gasket – Bowl (Sold in Kit Only.	1
●◆617	270344	Seal – Fuel Intake Tube	1
●◆634		Washer–Shaft (Sold in Kit Only)	1
955	493637	Screw – Bowl Mtg. (Std.) **Note:** 494870 Screw – Bowl Mtg. (High Altitude)	1
975	493640	Bowl Assy. – Carburetor	1

● Included in Carburetor Kit–Part No. 493762.
◆ Included in Carburetor Gasket Set–Part No. 490937.

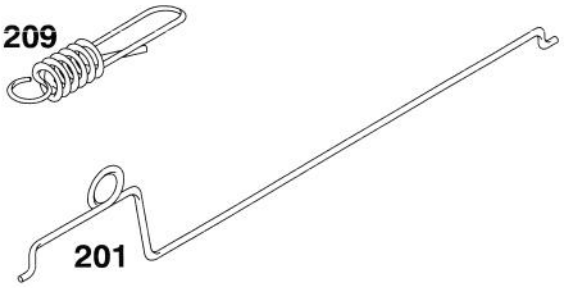

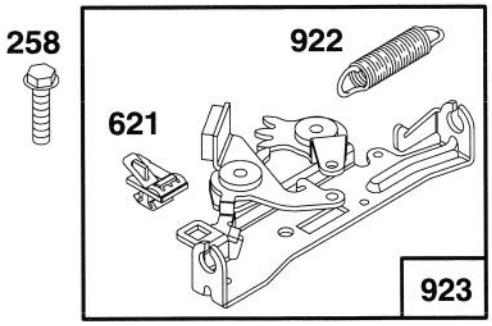

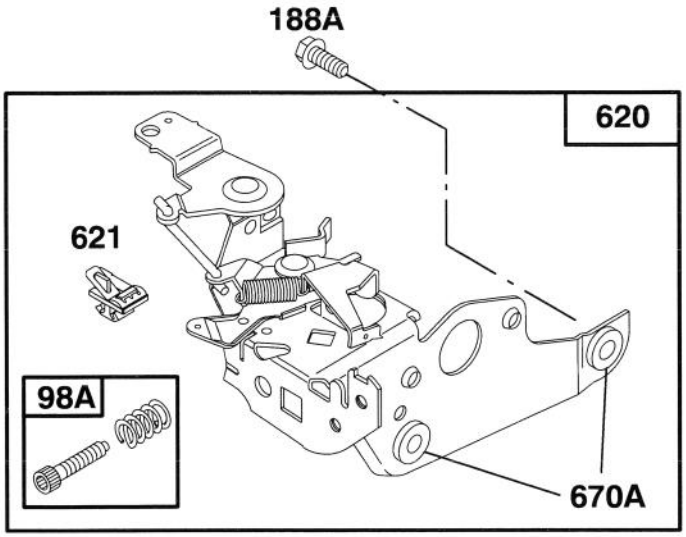

Assemblies include all parts shown in frames.

ENGINE BRIGGS & STRATTON MODEL 127802-0514-21

Ref. No.	Part No.	Description	No. Used
98A	493280	Screw – Speed Adjust	1
188A	94644	Screw – Hex. Head	1
201	262579	Link – Governor	1
209	262661	Spring – Governor	1
258	94512	Screw – Hex Hd.	1

Ref. No.	Part No.	Description	No. Used
620	495975	Bracket – Carburetor	1
621	396847	Switch – Stop	1
670A	493823	Spacer – Bracket	1
922	262640	Spring – Brake	1
923	493442	Brake Assembly	1

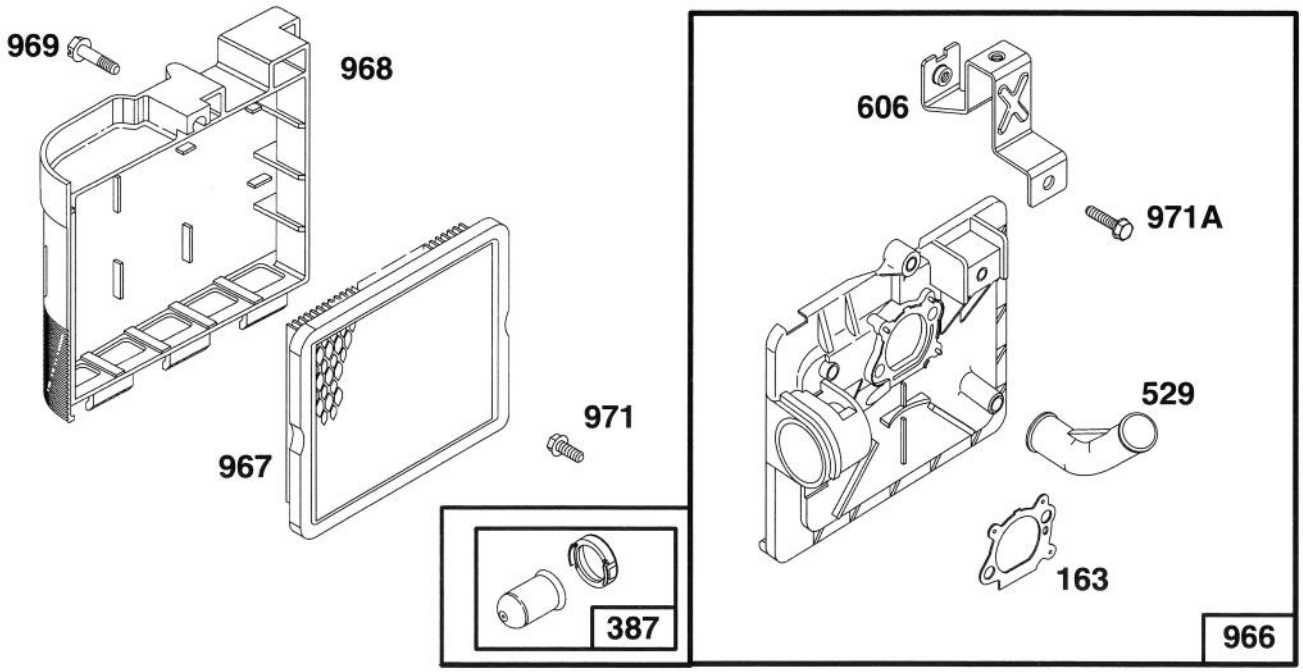

Assemblies include all parts shown in frames.

ENGINE BRIGGS & STRATTON MODEL 127802-0514-21

Ref. No.	Part No.	Description	No. Used
163	272653	Gasket – Air Cleaner	1
387	496115	Primer – Carburetor	1
529	281299	Grommet – Breather	1
606	224815	Strap – Bracket	1
966	496116	Base – Air Cleaner	1

Ref. No.	Part No.	Description	No. Used
967	491588	Filter – Air	1
968	281340	Cover – Air Cleaner	1
969	94120	Screw – Cover Mtg.	1
971	94121	Screw – Air Cleaner	1
971A	94749	Screw – Hex. Head	1

★ Included in Gasket Set–Part No. 496117.

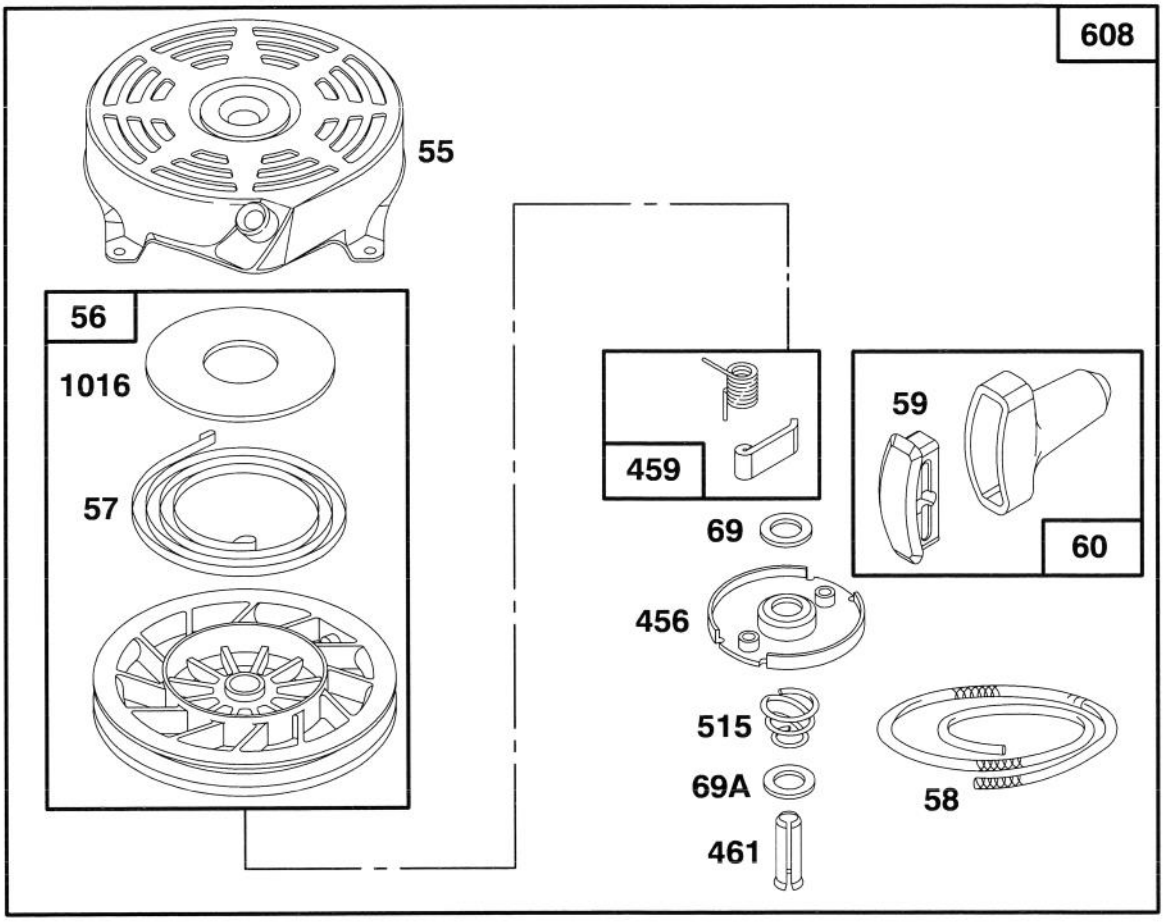

Assemblies include all parts shown in frames.

ENGINE BRIGGS & STRATTON MODEL 127802-0514-21

Ref. No.	Part No.	Description	No. Used
55	492831	Housing – Rewind Starter	1
56	493824	Pulley – Rewind Starter	1
57	262594	Spring – Rewind Starter	1
58	280399	Rope – Rewind Starter	1
59	396892	Insert – Handle	1
60	393152	Handle – Rewind Starter	1
69	280973	Washer – Rewind Starter	1
69A	224322	Washer – Rewind Starter	1
456	224321	Retainer – Rewind Starter	1

Ref. No.	Part No.	Description	No. Used
459	492833	Pawl – Starter	1
461	262626	Pin – Starter	1
515	262625	Spring – Torsion	1
608	493295	Starter Assy. – Rewind	1
		Includes:	
		94128 Screw – Hex. Hd.	
		92987 Nut – Hex.	1
1016	224278	Cover – Rewind Starter	1

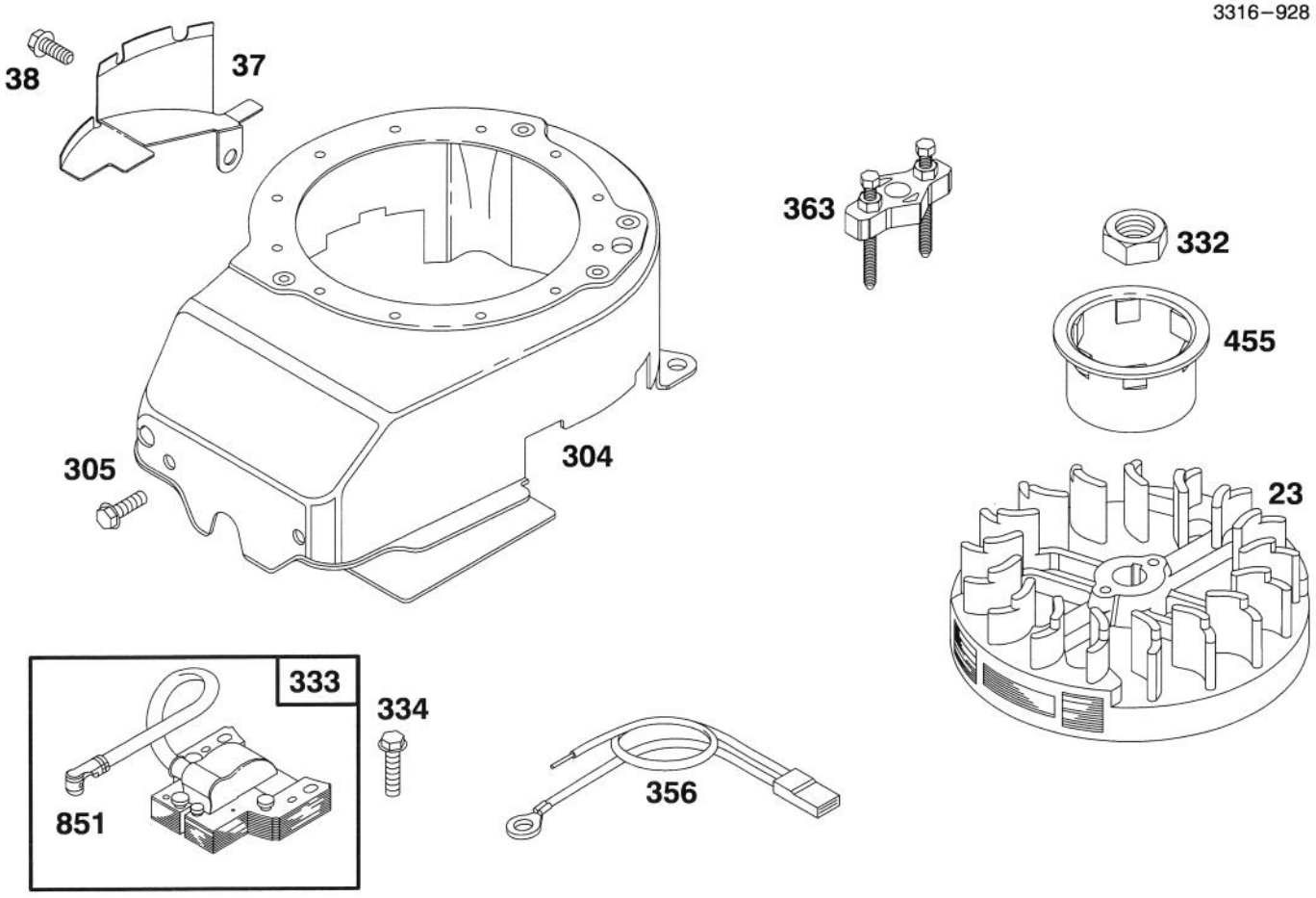

Assemblies include all parts shown in frames.

ENGINE BRIGGS & STRATTON MODEL 127802-0514-21

Ref. No.	Part No.	Description	No. Used
23	492177	Flywheel	1
37	224511	Guard – Flywheel	1
38	94786	Screw – Hex. Head	1
304	493293	Housing – Blower	1
305	94786	Screw – Sem	1
332	92284	Nut – Flywheel	1

Ref. No.	Part No.	Description	No. Used
333	802574	Armature – Magneto	1
334	94731	Screw – Sem	1
356	398808	Wire – Ground	1
363	19069	Puller – Flywheel	1
455	224250	Cup – Starter	1
851	493880	Terminal – Ignition Cable	1

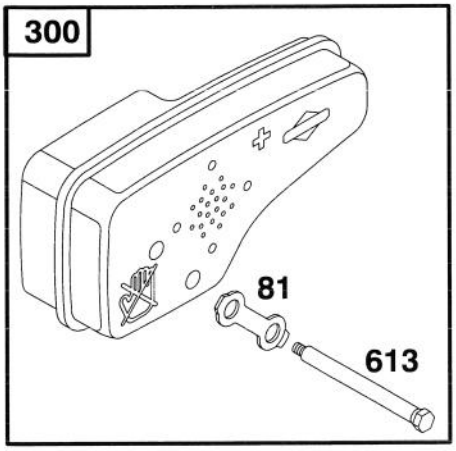

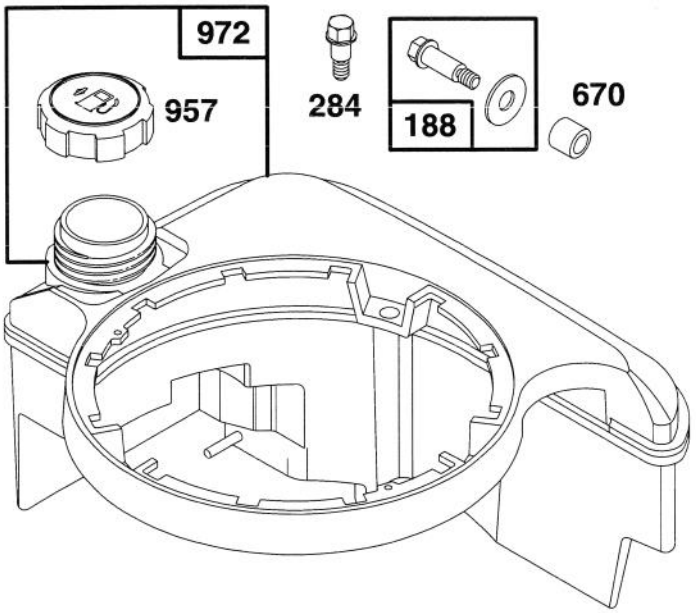

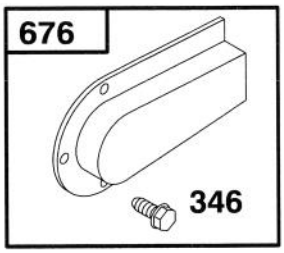

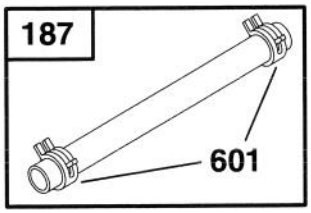

Assemblies include all parts shown in frames.

ENGINE BRIGGS & STRATTON MODEL 127802-0514-21

Ref. No.	Part No.	Description	No. Used
81	223664	Lock – Muffler Screw	1
187	492790	Hose – Fuel	1
188	398540	Screw – Tank Mounting	1
284	94511	Screw – Hex. Head	1
300	496106	Muffler – Exhaust	1
346	93705	Screw – Hex. Head	1

Ref. No.	Part No.	Description	No. Used
601	93807	Clamp – Hose	1
613	94231	Screw – Muffler Mtg.	1
670	280512	Spacer – Fuel Tank	1
676	493871	Deflector – Muffler	1
957	397974	Cap Assy. – Fuel	1
972	495224	Tank Assembly – Fuel	1

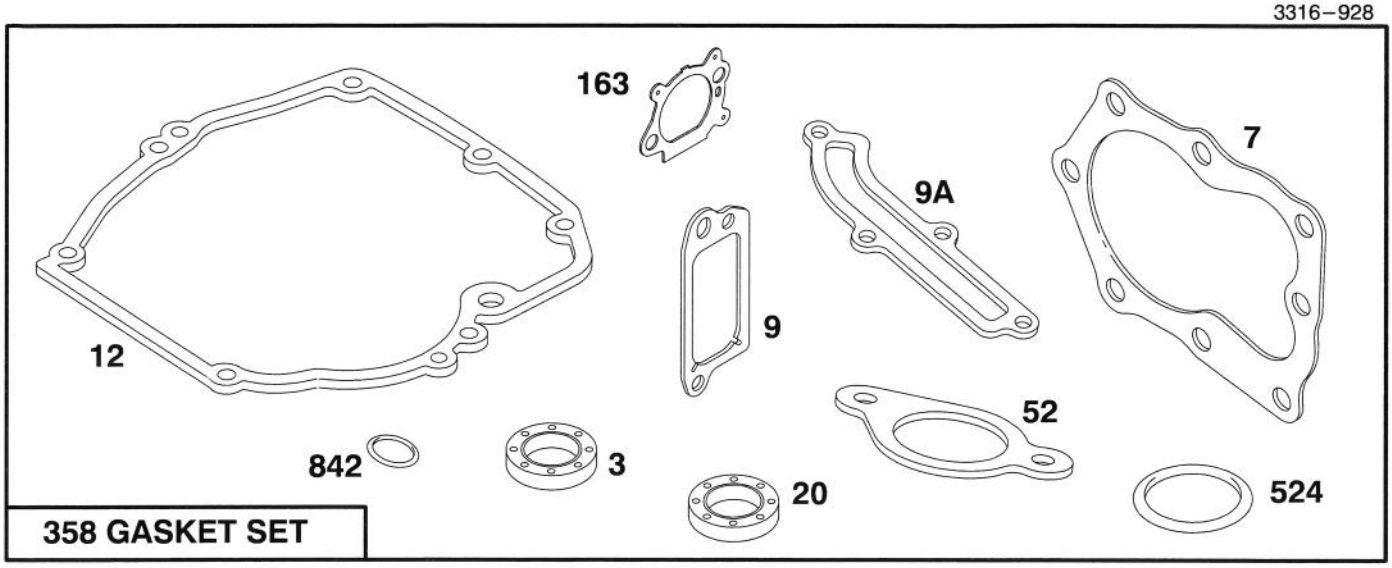

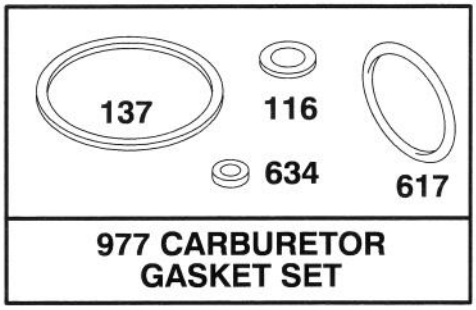

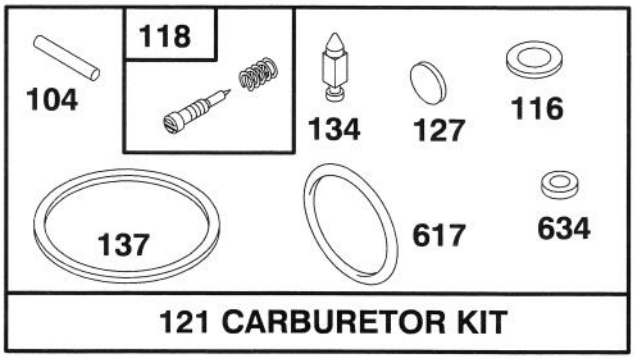

Assemblies include all parts shown in frames.

ENGINE BRIGGS & STRATTON MODEL 127802-0514-21

Ref. No.	Part No.	Description	No. Used
★3	299819	Seal – Oil	1
★7	272200	Gasket – Cylinder Hd.	1
★9	272481	Gasket – Valve Cover	1
★9A	272238	Gasket – Baffle Plate	1
★12	272198	Gasket – Crankcase	1
★20	399781	Seal – Oil	1
★52	272199	Gasket – Intake Elbow	1
●104	231371	Pin – Float Hinge	1
●◆116		Gasket – Sealing (Sold in Kit Only)	1
●118	493765	Valve – Needle	1
121	493762	Carburetor Kit	1
●127		Plug – Welch (Sold in Kit Only)	1
●134	398188	Valve – Inlet (Includes Seat)	1
●◆137		Gasket – Bowl (Sold in Kit Only)	1
★163	272653	Gasket – Air Cleaner	1
358	496117	Gasket Set	1
★524	280393	Seal – Filler Tube	1
●◆617	270344	Seal – Fuel Intake Tube	1
●◆634		Washer – Shaft (Sold in Kit Only)	1
★842	280966	Seal – O-Ring	1
977	490937	Gasket Set – Carburetor	1

● Included in Carburetor Kit–Part No. 493762.
◆ Included in Carburetor Gasket Set–Part No. 490937.
★ Included in Gasket Set–Part No. 496117.

TORO PART NUMBER INDEX

Part No.	Description	Pg. No.	Ref. No.	Qty.
14–9949	Wheel & Tire Assembly	4	9	2
16–5989	Housing – Deck	1	22	1
19–4050	Knob	5	1	2
26–0672	Bolt – Blade	3	5	1
27–6230	Bolt – Wheel	4	7	2
27–6230	Bolt – Wheel	1	33	2
27–6250	Bushing	1	31	2
40–1940	Washer	4	10	2
40–1940	Washer	1	30	2
46–1113	Wheel & Tire Assembly 7	1	32	2
46–6430	Screw – Handle	5	10	1
46–6432	Screw – Handle	5	11	1
46–6435	Screw – Handle	5	3	1
46–6980	Support – Cable	5	12	1
46–8081	Guide – Rope	5	4	1
63–8590	Screw	4	4	2
65–5210	Screw – Thread Forming	1	12	2
66–0680	Decal – French Regulation	1	20	1
71–7740	Spring – Counterbalance	4	11	1
71–7770	Plate – Securing Rear	4	17	2
71–7800	Arm – Pivot	4	18	1
71–7820	Pivot – Front	1	28	1
71–7840	Rod – Trigger	4	19	1
71–7860	Grip – Upper	1	13	1
71–7870	Grip – Lower	1	8	1
71–7900	Cap – Bolt Hinge L.H.	1	15	1
71–7910	Cap – Bolt Hinge R.H.	1	11	1
71–7920	Cover – Belt	1	6	1
71–7930	Trigger – H.O.C.	1	10	1
71–7940	Retainer – Blade	3	1	1
71–7970	Rod – Link	4	14	1
71–7980	Indicator – H.O.C.	4	15	1
71–7990	Ramp – Discharge	1	26	1
71–8060	Spring – Trigger Ret.	4	2	2
71–8080	Saddle – H.O.C.	4	3	1
71–8090	Mount – Handle L.H.	5	*	1
71–8100	Mount – Handle R.H.	5	16	1
71–8450	Cover – Spring	4	12	1
71–8580	Spacer – Door	1	19	2
71–8830	Retainer – Shaft	1	27	2
71–8920	Kicker – Front Right	1	2	1
71–9024	Handle	5	2	1
71–9230	Kicker – Rear Right	1	4	1
71–9250	Kicker – Rear Left	1	21	1
71–9260	Blade – 48cm Recycler	3	2	1
71–9440	Kicker – Front Left	1	23	1
71–9460	Bag – Grass	6	5	1
71–9470	Door – Bag	6	3	1
71–9480	Handle – Door	6	2	1
71–9800	Door – Discharge	1	18	1
71–9840	Spring – Door	1	17	2
71–9900	Frame – Bag	6	4	1
80–0510	Stiffener – Blade	3	3	1
86–7990	Screw – Clamp	2	10	1
92–5412	Stop – Pivot	5	8	1
92–7663	Cover – Wheel	4	8	1
92–7852	Shield – Muffler	2	7	1
92–7863	Decal – Deck	1	1	1
92–7864	Decal – Engine	2	1	1
92–7886	Shroud – Engine	2	4	1
92–7887	Screw – Mounting	2	2	2
92–9077	Decal – DIN	1	5	1
93–0336	Bail – Control	5	9	1
93–1116	Cable – Brake	5	15	1
93–1118	Control – Throttle	5	7	1
2210–249	Clamp – Casing	2	11	1
2210–316	Stop – Rope	2	3	1
322–29	Screw – Hex Hd. Cap	1	16	2
3253–22	Washer – Lock	3	4	1
3256–22	Washer – Flat	5	13	1
3284–5	Pin – Groove	1	9	1
3290–378	Tie – Cable	2	5	1
3290–378	Tie – Cable	5	14	1
3296–5	Nut – Lock	4	6	2
3296–5	Nut – Lock	1	29	2
3296–42	Nut – Lock	5	5	2
3296–56	Nut – Lock	5	6	1
32112–11	Nut – Push	1	25	1
32112–13	Nut – Push	4	5	1
32144–4	Screw – Tapping	4	16	4
32144–4	Screw – Tapping	1	24	8
32144–31	Screw – Tapping	4	1	1
32144–70	Screw – Tapping	1	7	1
32144–73	Screw – Hex Washer Hd.	2	6	3
32144–97	Screw – Phillips Hd.	1	14	2
32144–102	Screw – Engine	2	8	3
32144–111	Screw – Phillips Hd.	1	3	8
32144–111	Screw – Thr'd Form	6	1	5
32151–93	Ring – Grip	4	13	1

*Not Illustrated