FORM NO. 3316–929

TORO®

MODEL NO. 20806BC–4900001 & UP

PARTS CATALOG

48cm RECYCLER® MOWER

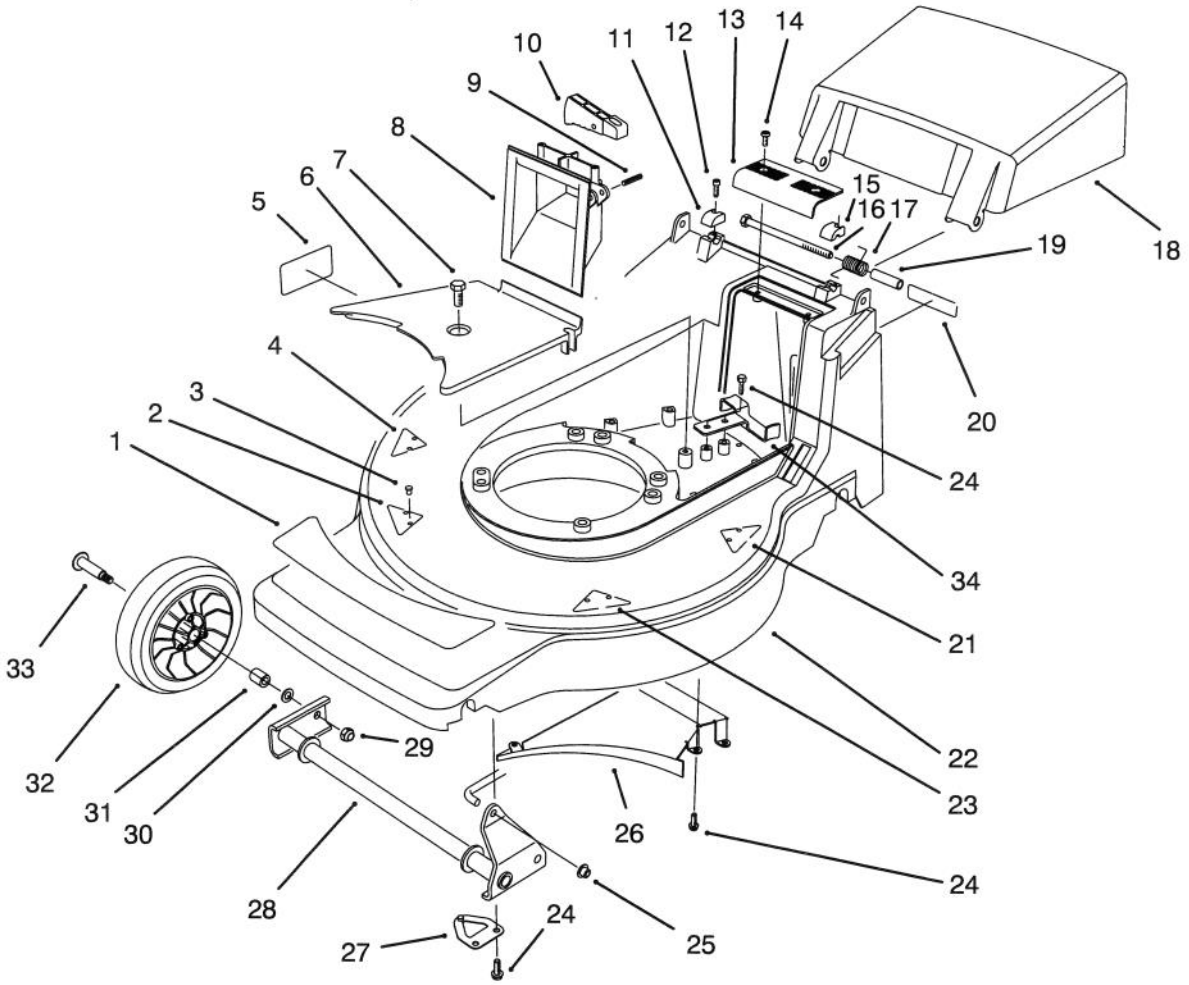

C–2011

HOUSING ASSEMBLY

Ref. No.	Part No.	Description	No. Used
1	92–7863	Decal – Deck	1
2	71–8920	Kicker – Front Right	1
3	32144–111	Screw – Phillips Hd.	8
4	71–9230	Kicker – Rear Right	1
5	92–9077	Decal – DIN	1
6	71–7920	Cover – Belt	1
7	32144–70	Screw – Tapping	1
8	71–7870	Grip – Lower	1
9	3284–5	Pin – Groove	1
10	71–7930	Trigger – H.O.C.	1
11	71–7910	Cap – Bolt Hinge R.H.	1
12	65–5210	Screw – Thread Forming	2
13	71–7860	Grip – Upper	1
14	32144–97	Screw – Phillips Hd.	2
15	71–7900	Cap – Bolt Hinge L.H.	1
16	322–29	Screw – Hex Hd. Cap	2
17	71–9840	Spring – Door	2
18	71–9800	Door – Discharge	1

Ref. No.	Part No.	Description	No. Used
19	71–8580	Spacer – Door	2
20	66–0680	Decal – French Regulation	1
21	71–9250	Kicker – Rear Left	1
†22	16–5989	Housing – Deck (Incl. Ref. #2–5, 20, 21, & 23)	1
23	71–9440	Kicker – Front Left	1
24	32144–4	Screw – Tapping	10
25	32112–11	Nut – Push	1
26	71–7990	Ramp – Discharge	1
27	71–8830	Retainer – Shaft	2
28	71–7820	Pivot – Front	1
29	3296–5	Nut – Lock	2
30	40–1940	Washer	2
31		Bushing	2
32	46–1113	Wheel & Tire Assembly 7"	2
33	27–6230	Bolt – Wheel	2
34	71–7890	Guide – Belt Rear	1

† Obtain From Toro Europe N.V.

Copyright 1994 The Toro Company
All Rights Reserved

TPS

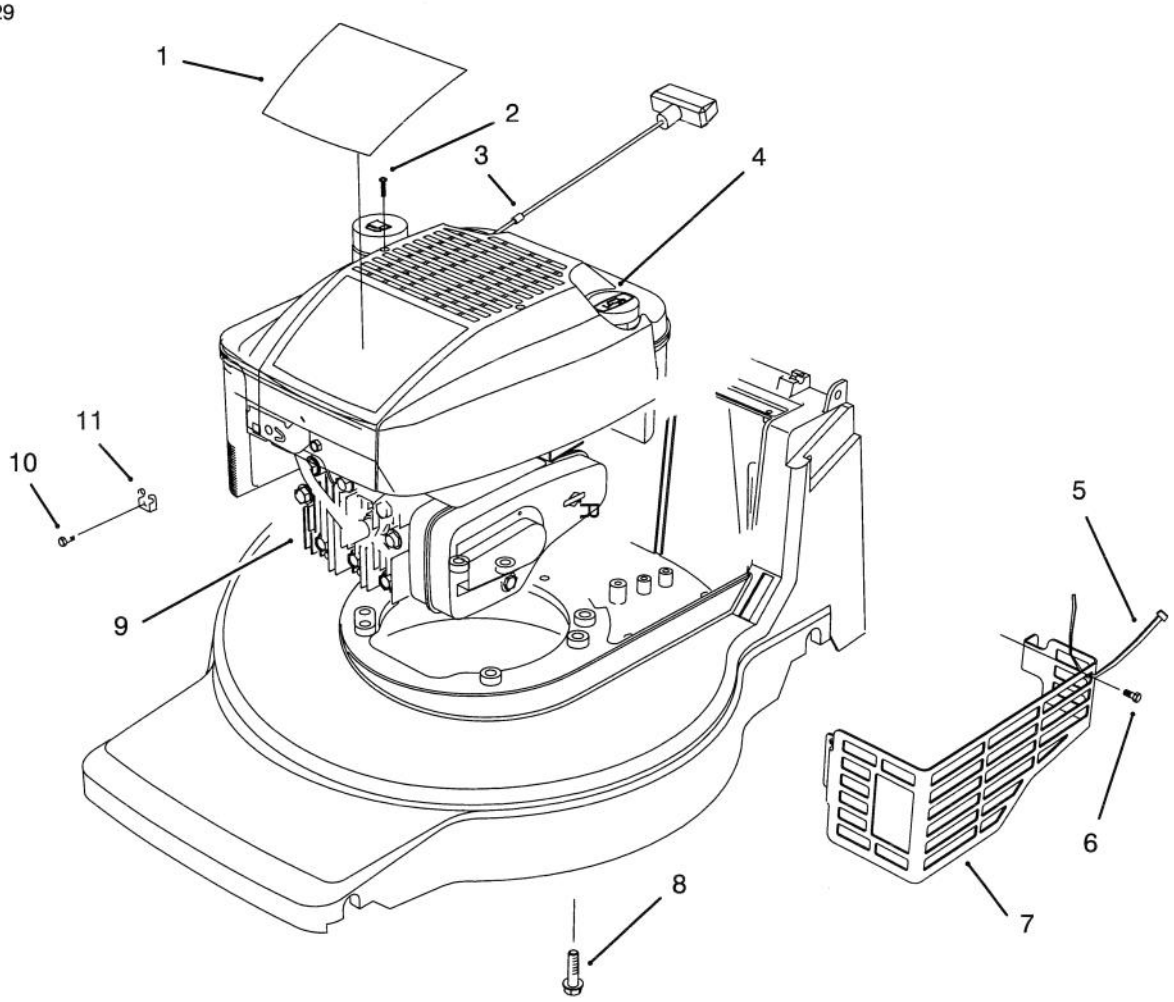

C–2004

ENGINE ASSEMBLY

Ref. No.	Part No.	Description	No. Used
1	92–7864	Decal – Engine	1
2	92–7887	Screw – Mounting	2
3	2210–316	Stop – Rope	1
4	92–7886	Shroud – Engine	1
5	3290–378	Tie – Cable	1
6	32144–73	Screw – Hex Washer Hd. Thread Forming	3

Ref. No.	Part No.	Description	No. Used
7	92–7852	Shield – Muffler	1
8	32144–102	Screw – Engine	3
9		Engine	1
10	86–7990	Screw – Clamp	1
11	2210–249	Clamp – Casing	1

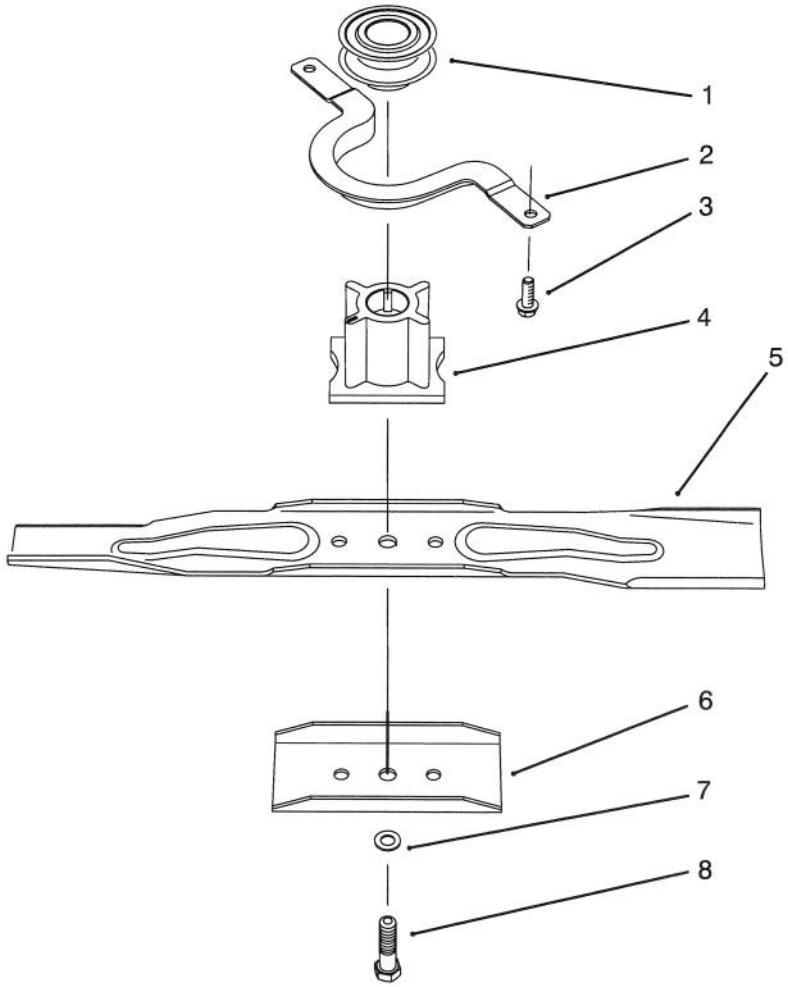

C–1012

BLADE ASSEMBLY

Ref. No.	Part No.	Description	No. Used
1	62–7550	Pulley – Driver	1
2	71–7960	Guide – Engine Belt	1
3	32144–4	Screw – Tapping	2
4	71–7940	Retainer – Blade	1

Ref. No.	Part No.	Description	No. Used
5	71–9260	Blade – 48cm Recycler	1
6	80–0510	Stiffener – Blade	1
7	3253–22	Washer – Lock	1
8	26–0672	Bolt – Blade	1

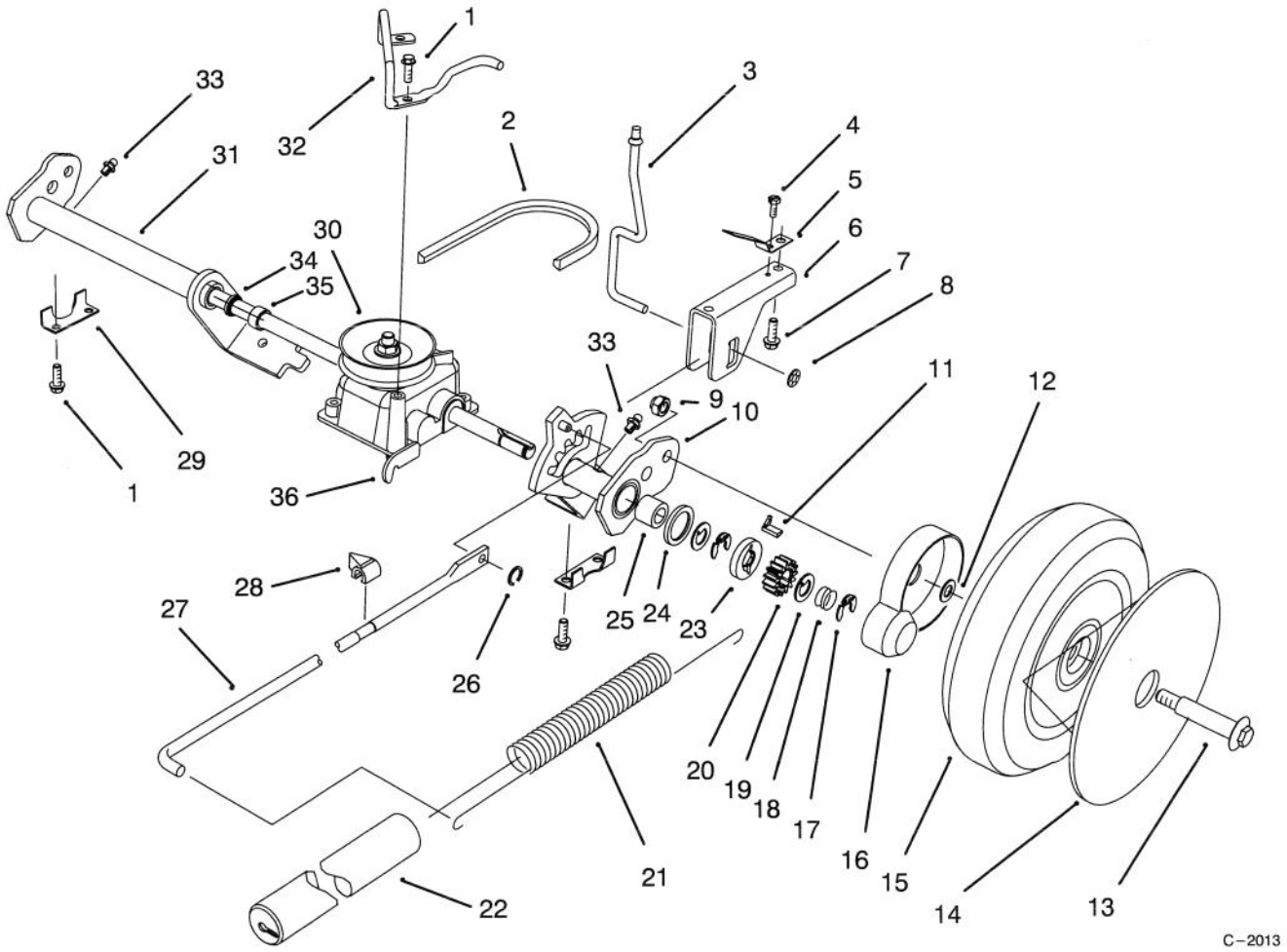

REAR AXLE ASSEMBLY

Ref. No.	Part No.	Description	No. Used
1	32144–4	Screw – Tapping	6
2	71–9450	V–Belt	1
3	71–7840	Rod – Trigger	1
4	32144–31	Screw – Tapping	1
5	71–8060	Spring – Trigger Ret.	2
6	71–8080	Saddle – H.O.C.	1
7	63–8590	Screw	2
8	32112–13	Nut – Push	1
9	3296–5	Nut – Lock	2
†10	92–9677	Arm – Pivot L.H. (Incl. Ref. #25, & 33–35)	1
11	66–6050	Key – Rocking L.H.	1
*	66–6040	Key – Rocking R.H.	1
12	74–1670	Spacer – Wheel	2
13	27–6230	Bolt – Wheel	2
14	92–7663	Cover – Wheel	1
15	14–9959	Wheel & Tire Assembly	2
16	74–1660	Cover – Wheel	2
17	65–2720	Ring – Retaining	4
18	65–4720	Spring – Compression	2

Ref. No.	Part No.	Description	No. Used
19	65–4740	Washer – Thrust Keyed	4
20	65–4750	Gear – Pinion	2
21	71–7740	Spring – Counterbalance	1
22	71–8450	Cover – Spring	1
23	65–4760	Washer	2
24	65–4710	Ring – Friction	2
25	48–2060	Bearing – Roller	2
26	32151–93	Ring – Grip	1
27	71–7970	Rod – Link	1
28	71–7980	Indicator – H.O.C.	1
29	71–7770	Plate – Securing Rear	2
†30	71–9600	Gear Case Assembly	1
†31	92–9680	Arm – Pivot R.H. (Incl. Ref. #25, & 33–35)	1
32	71–9850	Retainer – Belt	1
33	302–26	Fitting – Grease	2
34	47–6730	Seal – Oil	2
35	47–2890	Bushing	2
36	71–9630	Bracket – Traction	1

*Not Illustrated
† Obtain From Toro Europe N.V.

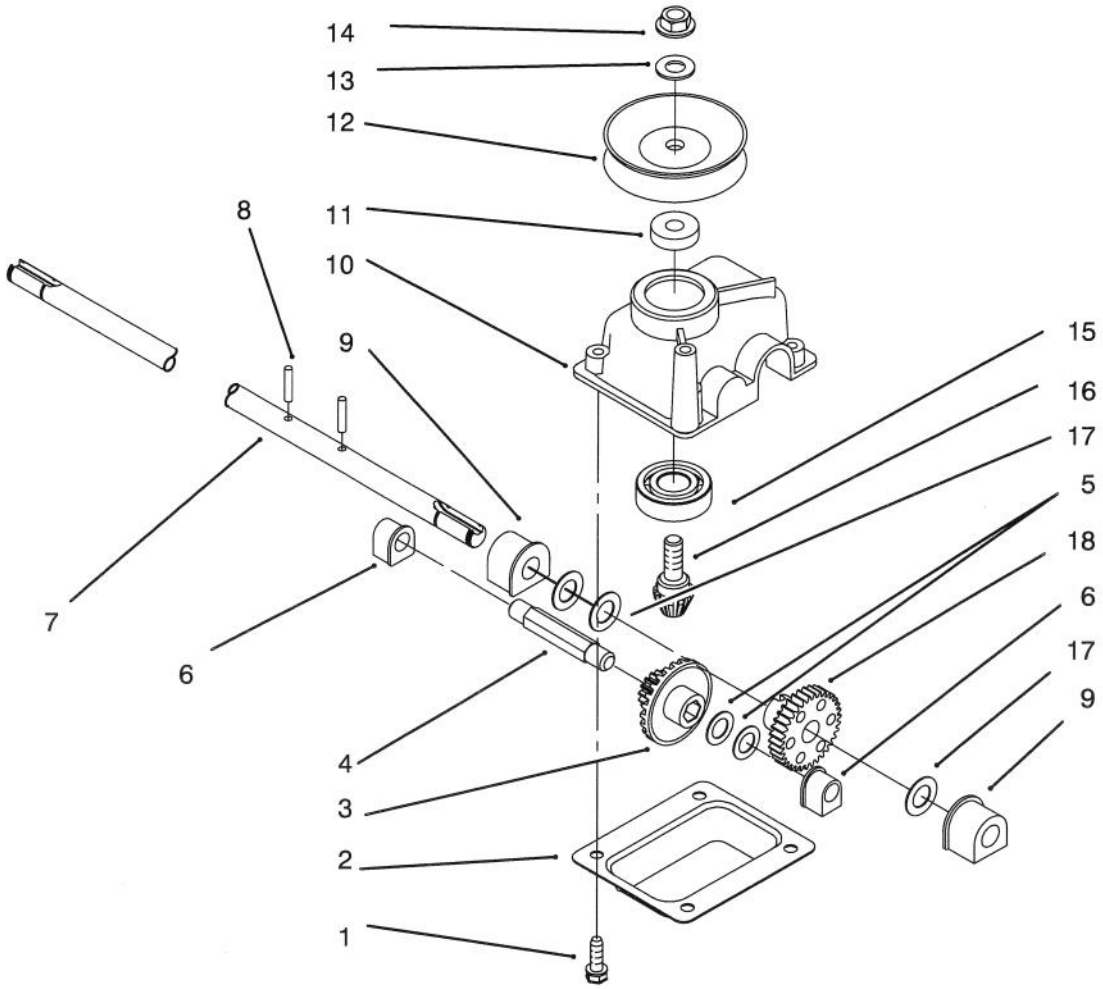

GEAR CASE ASSEMBLY

Ref. No.	Part No.	Description	No. Used
1	49–2040	Screw – Taptite	4
2	614668	Cover – Gear Case	1
3	55–3760	Pinion – 15 Tooth	1
4	614696	Shaft – Intermediate	1
5	36–4791	Washer	2
6	60–8750	Bushing	2
7	71–9620	Shaft – Output	1
8	32121–63	Pin – Groove	2
9	60–8850	Bushing – Output	2
10	614578	Gearcase	1

Ref. No.	Part No.	Description	No. Used
11	62–6660	Spacer	1
12	71–9610	Pulley – Half	2
13	3256–24	Washer	1
14	3296–5	Nut	1
15	38–7820	Bearing – Ball	1
16	60–8890	Gear – Bevel Pinion	1
17	36–4780	Washer – Thrust	3
18	614596	Gear 34 Tooth	1
†*	71–9600	Gear Case Ass'y Complete	1

*Not Illustrated

† Obtain From Toro Europe N.V.

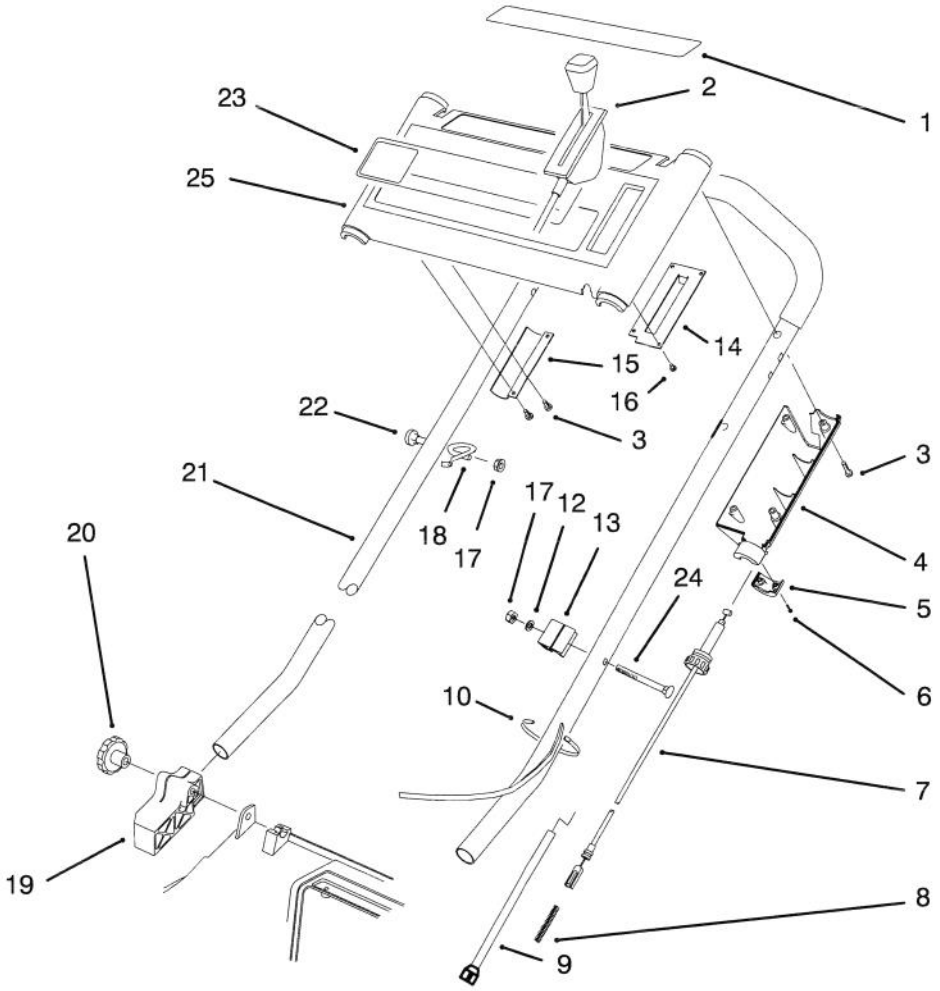

HANDLE ASSEMBLY

Ref. No.	Part No.	Description	No. Used
1	93–1120	Decal – Instruction	1
2	93–1117	Control – Throttle	1
3	32144–97	Screw – Phillips Pan Hd.	5
4	93–0339	Cover – Throttle Lower	1
5	71–7630	Cap – Throttle Lower	1
6	32144–99	Screw – Phillips Pan Hd.	2
7	93–1119	Cable – Traction	1
8	71–8310	Spring – Compression	1
9	93–1116	Cable – Brake	1
10	3290–378	Tie – Cable	1
12	3256–22	Washer – Flat	1
13	46–6980	Support – Cable	1
14	71–8040	Plate – Throttle	1

Ref. No.	Part No.	Description	No. Used
15	71–8130	Bracket – Control	1
16	32144–98	Screw – Phillips Pan Hd.	4
17	3296–42	Nut – Lock	2
18	46–8081	Guide – Rope	1
19	71–8100	Mount – Handle R.H.	1
*	71–8090	Mount – Handle L.H.	1
20	19–4050	Knob	2
21	71–9023	Handle Assembly	1
22	46–6435	Screw – Handle	1
23	92–7865	Decal – Panel SP	1
24	46–6432	Screw – Handle	1
25	16–8229	Panel – Control (Incl. Ref. #1, & 23)	1

*Not Illustrated

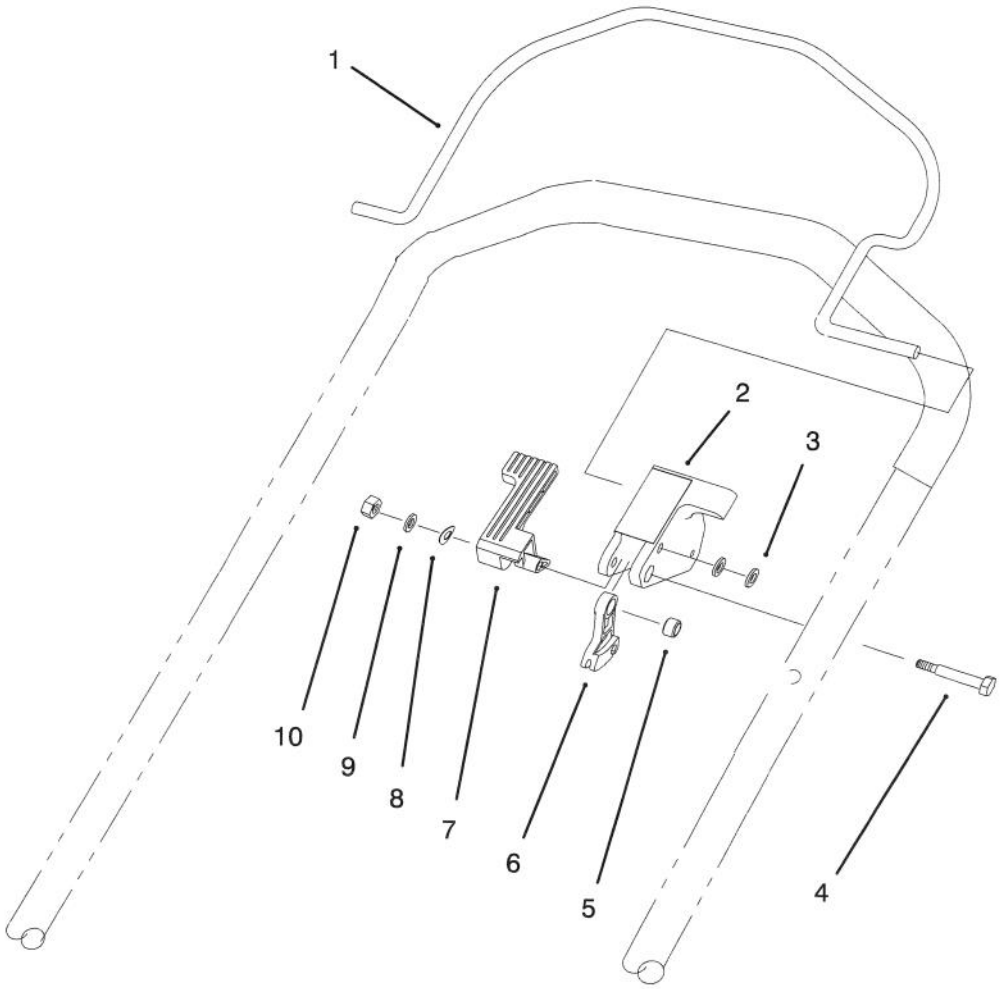

C–2082

CONTROL ASSEMBLY

Ref. No.	Part No.	Description	No. Used
1	93–0335	Bail – Control SP	1
2	93–0340	Stop – Pivot	1
3	3256–70	Washer – Flat	2
4	92–3132	Bolt – Shoulder	1
5	92–3133	Spacer – Lever Traction	1

Ref. No.	Part No.	Description	No. Used
6	46–5520	Lever – Traction	1
7	92–2299	Lever – Shift	1
8	92–2298	Washer – Spring	1
9	3256–49	Washer – Flat	1
10	3296–2	Nut – Lock	1

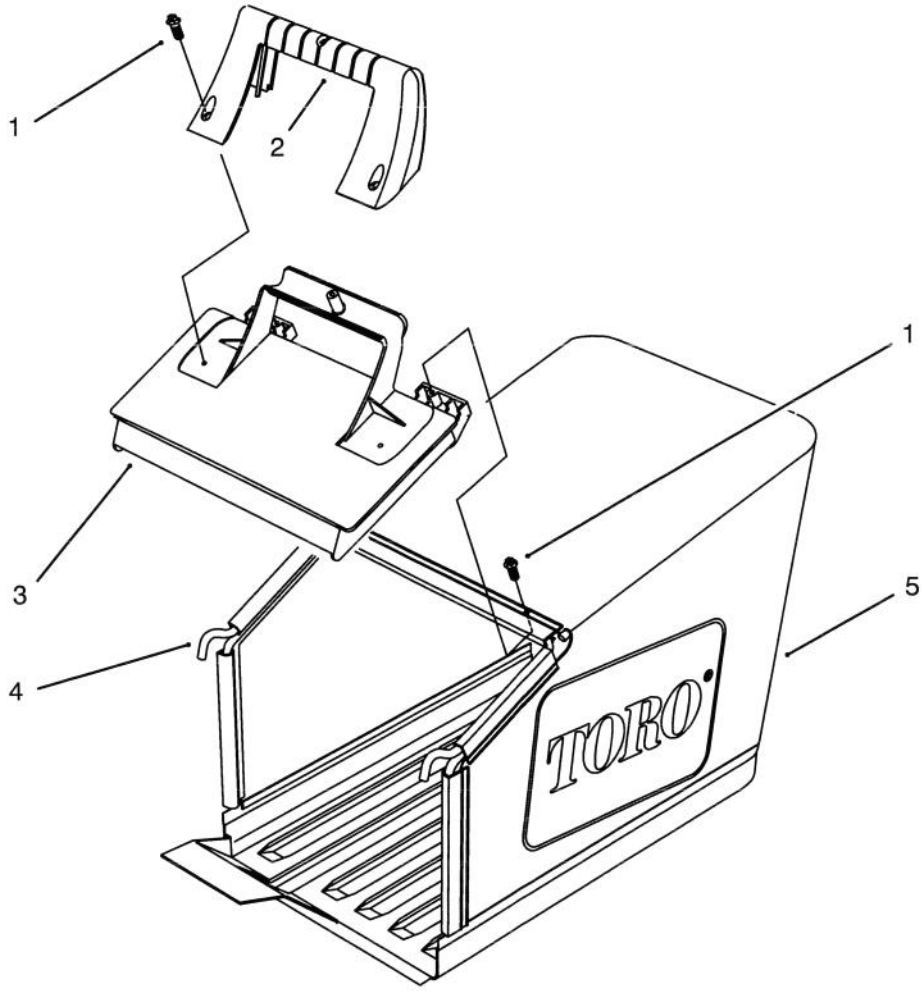

C–1509

GRASS BAG ASSEMBLY

Ref. No.	Part No.	Description	No. Used
1	32144–111	Screw – Thr'd Form	5
2	71–9480	Handle – Door	1
3	71–9470	Door – Bag	1

Ref. No.	Part No.	Description	No. Used
†4	71–9900	Frame – Bag	1
5	71–9460	Bag – Grass	1

† Obtain From Toro Europe N.V.

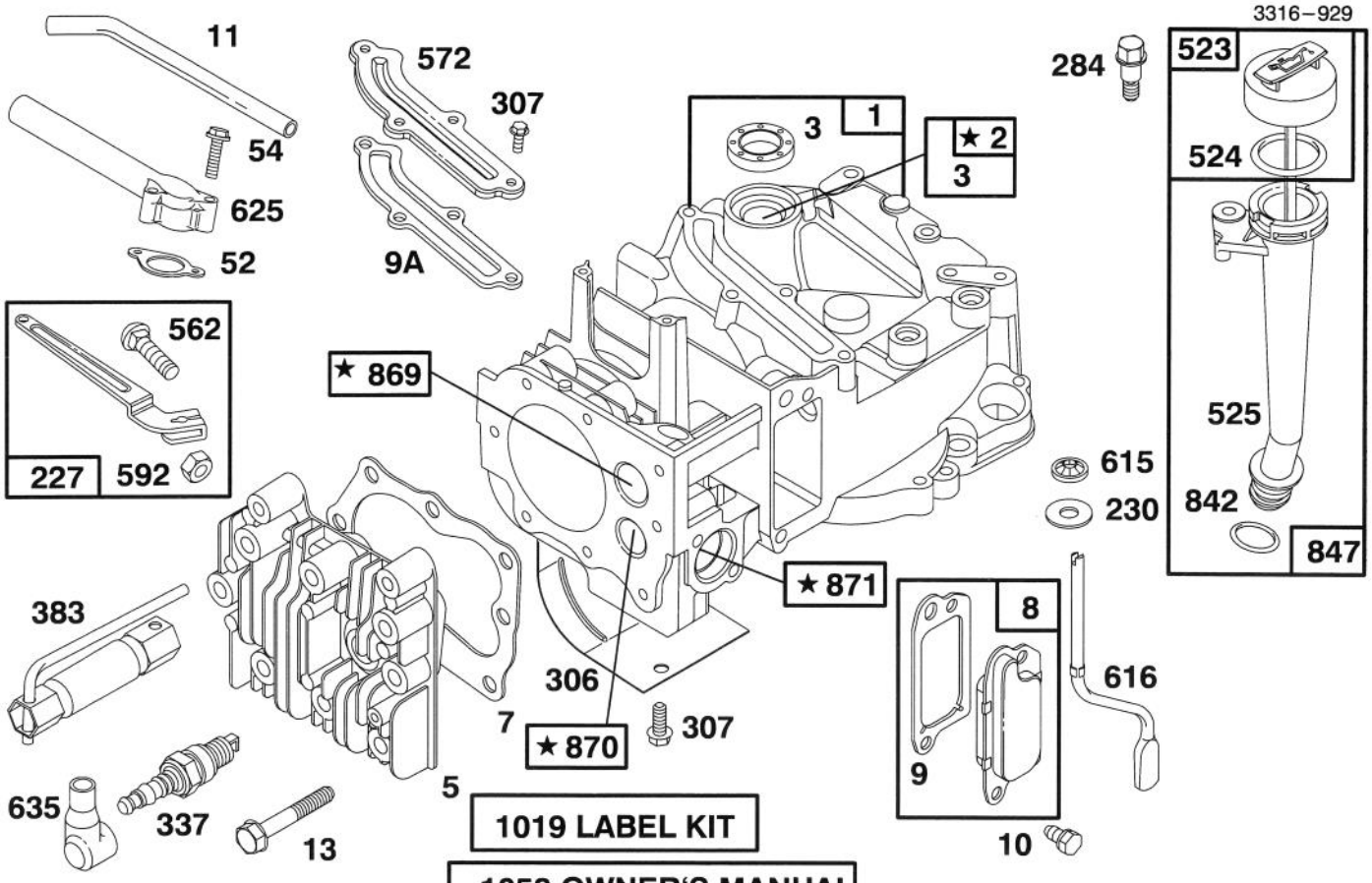

★ REQUIRES SPECIAL TOOLS TO INSTALL. SEE REPAIR INSTRUCTION MANUAL.

Assemblies include all parts shown in frames.

ENGINE BRIGGS & STRATTON MODEL 127802-0514-21

Ref. No.	Part No.	Description	No. Used
1	493260	Cylinder Assembly	1
2	293708	Bushing – Cylinder	1
★3	299819	Seal – Oil	1
5	213861	Head – Cylinder	1
★7	272200	Gasket – Cylinder Head	1
8	495786	Breather – Valve Chamber	1
★9	272481	Gasket – Valve Cover	1
★9A	272238	Gasket – Baffle Plate	1
10	94650	Screw – Breather Mtg.	1
11	231933	Tube – Breather	1
13	94547	Screw – Cylinder Head	1
★52	272199	Gasket – Intake Elbow	1
54	94526	Screw – Intake Elbow Mtg.	1
227	492349	Lever Assembly – Gov.	1
230	67072	Washer – Gov. Crank	1
284	94511	Screw – Hex. Head	1
306	224324	Shield – Cylinder	1
307	94515	Screw – Hex. Head	1
337	802592	Plug – Spark	1
383	89838	Wrench – Spark Plug	1

Ref. No.	Part No.	Description	No. Used
523	495264	Cap With Dipstick – Oil Filler	1
★524	280393	Seal – Filler Tube	1
525	495265	Tube – Oil Filler	1
562	92613	Bolt – Governor Lever	1
572	224328	Baffle – Cylinder	1
592	231082	Nut – Hex.	1
615	94474	Fastener	1
616	262578	Crank – Governor	1
625	281085	Tube – Fuel Intake	1
635	66538	Elbow – Spark Plug	1
★842	280966	Seal – O-Ring	1
847	495263	Oil Fill Tube and Dipstick Assy.	1
869	213512	Seat – Intake Valve	1
870	213513	Seat – Exhaust Valve	1
871	262001	Guide – Exhaust Valve **Note:** 63709 Guide – Intake Valve	1
1019	494256	Label Kit	1
1058	272262	Owner's Manual	1

★ Included in Gasket Set–Part No. 496117.

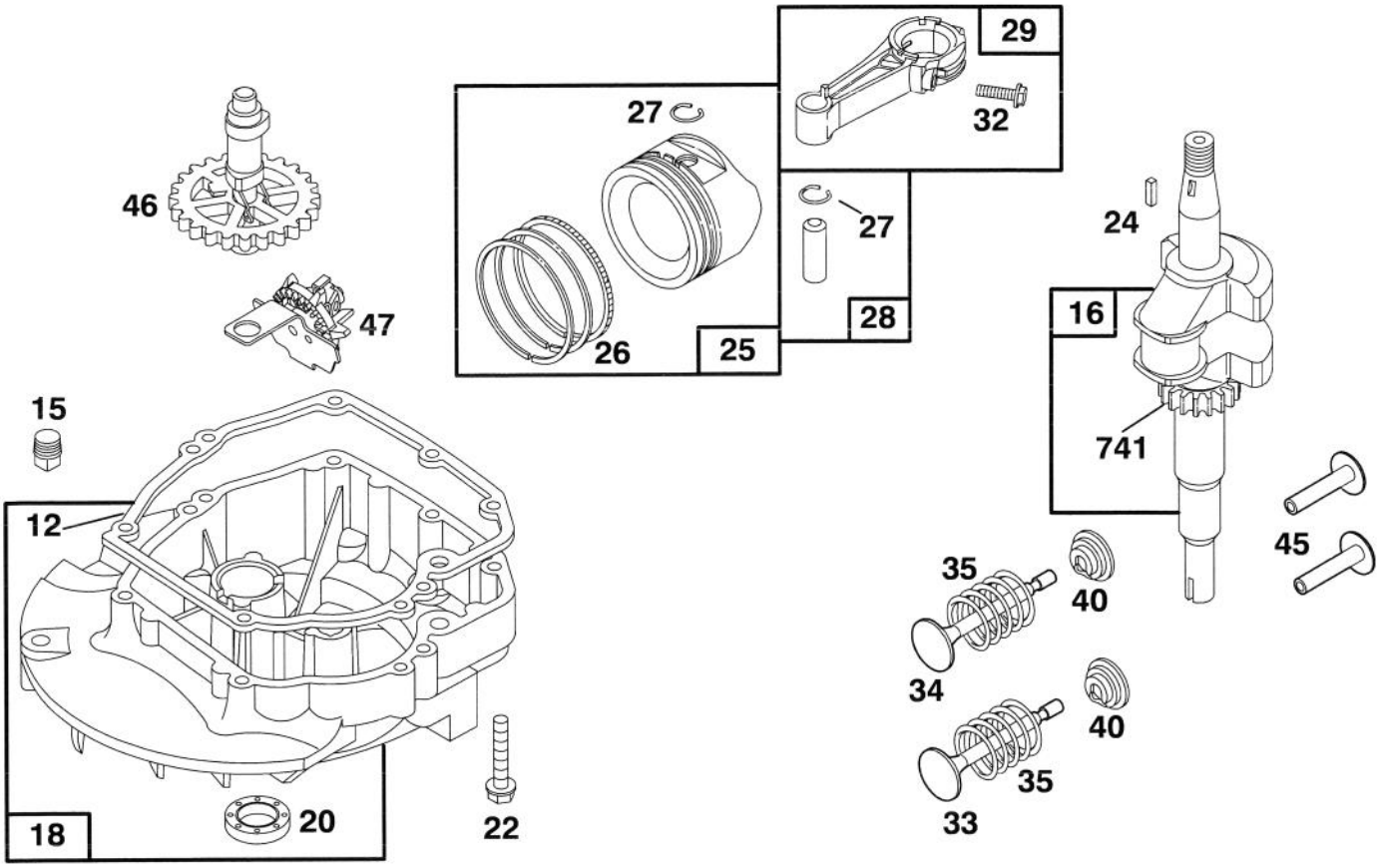

Assemblies include all parts shown in frames.

ENGINE BRIGGS & STRATTON MODEL 127802-0514-21

Ref. No.	Part No.	Description	No. Used
★12	272198	Gasket – Crankcase	1
15	94720	Plug – Oil Drain	1
16	494546	Crankshaft	
		Note: Order 94388 For Timing Gear Key.	1
18	493279	Sump – Engine	1
★20	399781	Seal – Oil	1
22	94220	Screw – Hex. Head	1
		Note: 94612 Screw – Hex. Head (One (1) Used in Hole Nearest Breather.)	1
24	222698	Key – Flywheel	1
25	493262	Piston Assy. (Standard)	1
	493385	Piston Assy. (.010" O.S.)	1
	493386	Piston Assy. (.020" O.S.)	1
	493387	Piston Assy. (.030" O.S.)	1
26	493261	Ring Set (Standard)	1
	493388	Ring Set (.010" O.S.)	1
	493389	Ring Set (.020" O.S.)	1
	493390	Ring Set (.030" O.S.)	1

Ref. No.	Part No.	Description	No. Used
27	26026	Lock – Piston Pin	1
28	298909	Pin – Piston (Standard)	1
	298908	Pin – Piston (.005" O.S.)	1
29	490566	Rod Assembly – Conn.	1
		Note: For Conn. Rod With .020" Undersize Crankpin Bearing – Order No. 490743.	1
32	94699	Screw – Connecting Rod	1
33	262651	Valve – Exhaust	1
34	262652	Valve – Intake	1
35	262224	Spring – Valve	1
40	93312	Retainer – Valve Spring	1
45	262204	Tappet – Valve	1
46	492828	Gear – Cam	1
47	493737	Slinger – Oil	1
741	262598	Gear – Timing	1

★ Included in Gasket Set–Part No. 496117.

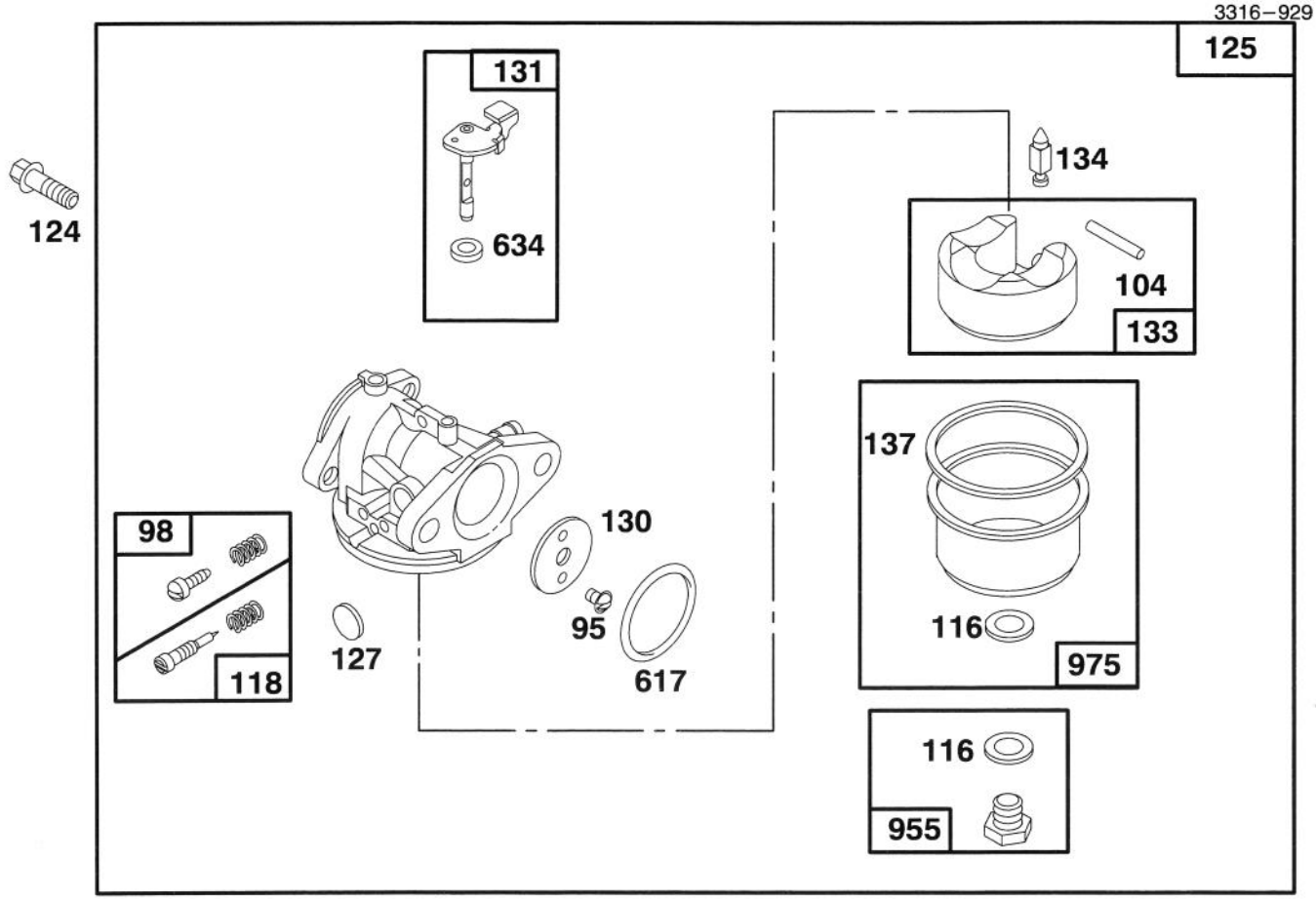

Assemblies include all parts shown in frames.

ENGINE BRIGGS & STRATTON MODEL 127802-0514-21

Ref. No.	Part No.	Description	No. Used
95	94098	Screw – Throttle Valve Mounting	1
98	398185	Screw – Idle Adjustment	1
●104	231371	Pin – Float Hinge	1
●◆116		Gasket–Sealing (Sold in Kit Only)	1
●118	493765	Valve – Needle	1
124	94525	Screw – Carburetor Mtg.	1
125	496114	Carburetor	1
●127		Plug – Welch (Sold in Kit Only)	1
130	223470	Valve – Throttle	1
131	493267	Shaft – Throttle	1

Ref. No.	Part No.	Description	No. Used
133	398187	Float Assy. – Carburetor	1
●134	398188	Valve – Inlet (Includes Seat)	1
●◆137		Gasket – Bowl (Sold in Kit Only.	1
●◆617	270344	Seal – Fuel Intake Tube	1
●◆634		Washer–Shaft (Sold in Kit Only)	1
955	493637	Screw – Bowl Mtg. (Std.) **Note:** 494870 Screw – Bowl Mtg. (High Altitude)	1
975	493640	Bowl Assy. – Carburetor	1

● Included in Carburetor Kit–Part No. 493762.
◆ Included in Carburetor Gasket Set–Part No. 490937.

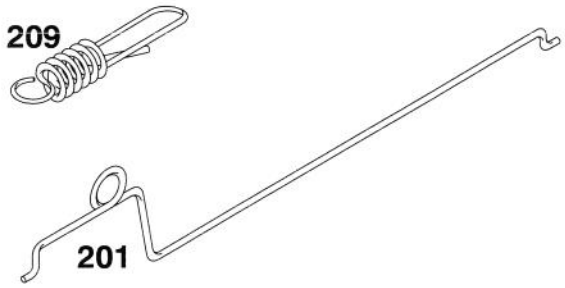

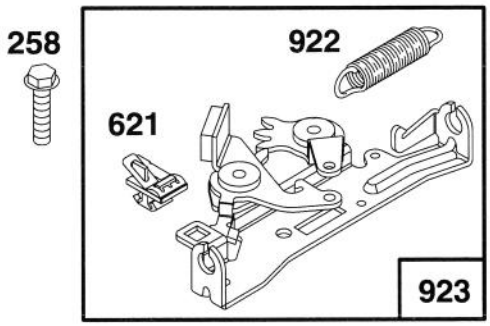

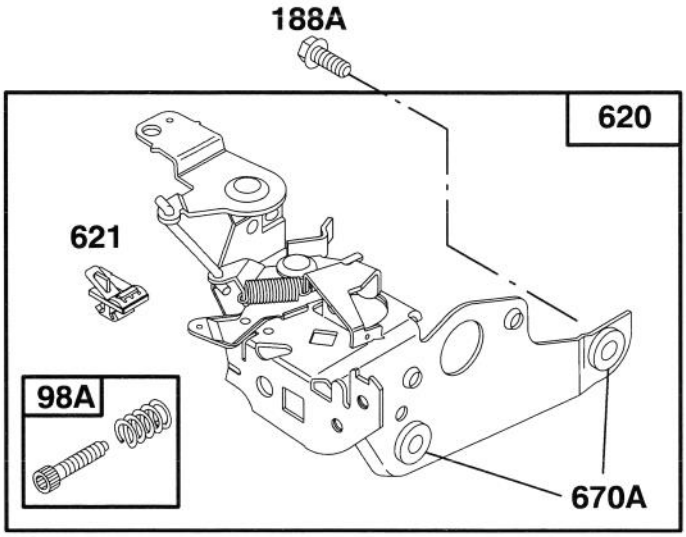

Assemblies include all parts shown in frames.

ENGINE BRIGGS & STRATTON MODEL 127802-0514-21

Ref. No.	Part No.	Description	No. Used
98A	493280	Screw – Speed Adjust	1
188A	94644	Screw – Hex. Head	1
201	262579	Link – Governor	1
209	262661	Spring – Governor	1
258	94512	Screw – Hex Hd.	1

Ref. No.	Part No.	Description	No. Used
620	495975	Bracket – Carburetor	1
621	396847	Switch – Stop	1
670A	493823	Spacer – Bracket	1
922	262640	Spring – Brake	1
923	493442	Brake Assembly	1

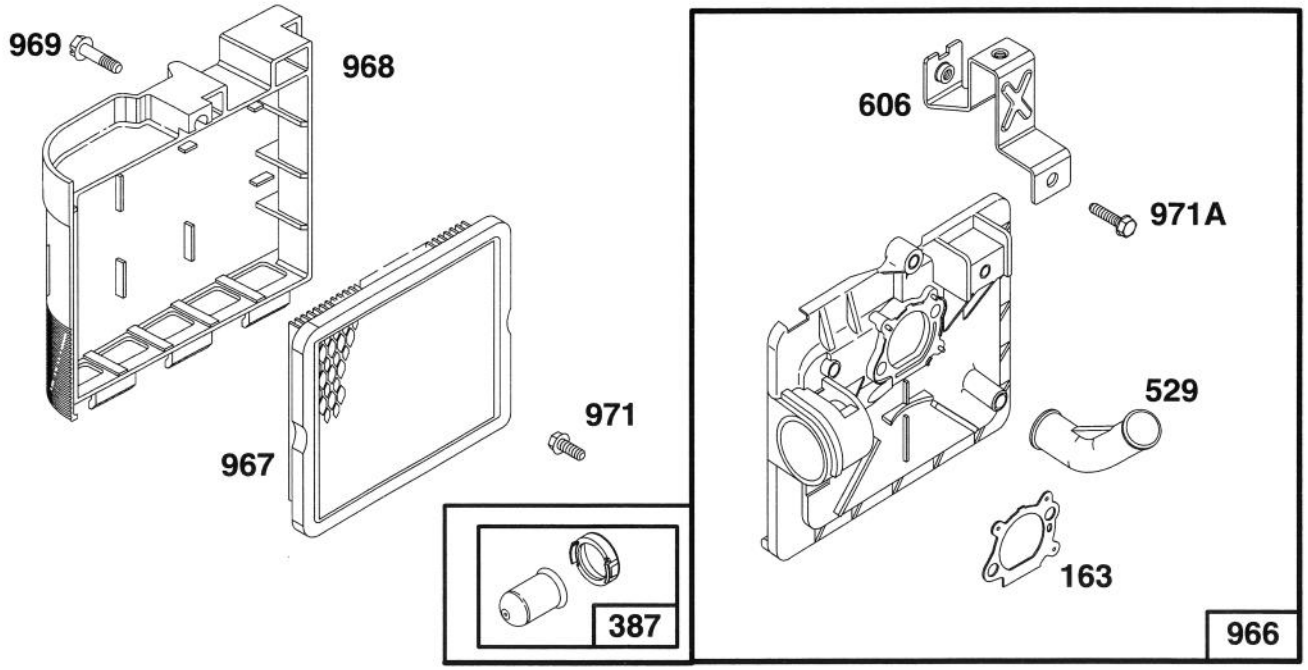

Assemblies include all parts shown in frames.

ENGINE BRIGGS & STRATTON MODEL 127802-0514-21

Ref. No.	Part No.	Description	No. Used
163	272653	Gasket – Air Cleaner	1
387	496115	Primer – Carburetor	1
529	281299	Grommet – Breather	1
606	224815	Strap – Bracket	1
966	496116	Base – Air Cleaner	1

Ref. No.	Part No.	Description	No. Used
967	491588	Filter – Air	1
968	281340	Cover – Air Cleaner	1
969	94120	Screw – Cover Mtg.	1
971	94121	Screw – Air Cleaner	1
971A	94749	Screw – Hex. Head	1

★ Included in Gasket Set–Part No. 496117.

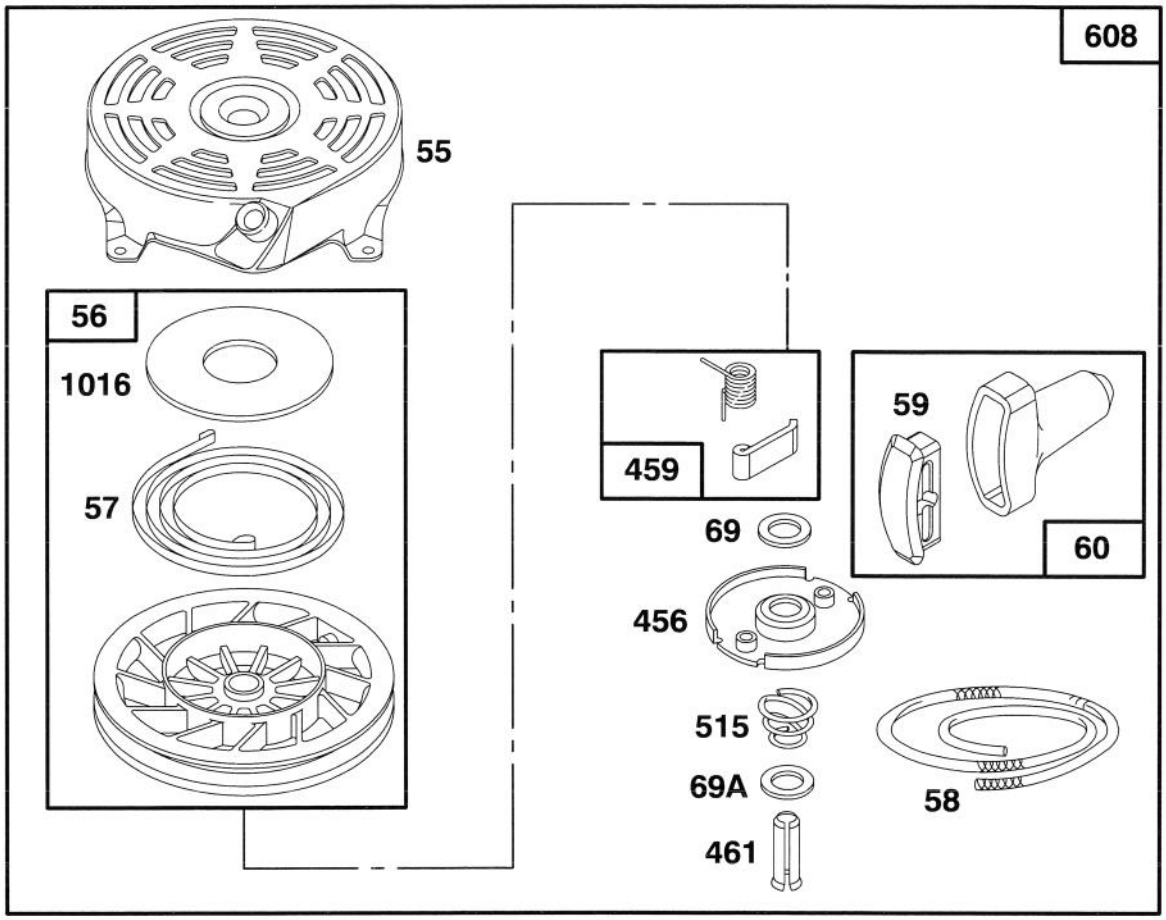

Assemblies include all parts shown in frames.

ENGINE BRIGGS & STRATTON MODEL 127802-0514-21

Ref. No.	Part No.	Description	No. Used
55	492831	Housing – Rewind Starter	1
56	493824	Pulley – Rewind Starter	1
57	262594	Spring – Rewind Starter	1
58	280399	Rope – Rewind Starter	1
59	396892	Insert – Handle	1
60	393152	Handle – Rewind Starter	1
69	280973	Washer – Rewind Starter	1
69A	224322	Washer – Rewind Starter	1
456	224321	Retainer – Rewind Starter	1

Ref. No.	Part No.	Description	No. Used
459	492833	Pawl – Starter	1
461	262626	Pin – Starter	1
515	262625	Spring – Torsion	1
608	493295	Starter Assy. – Rewind	1
		Includes:	
		94128 Screw – Hex. Hd.	
		92987 Nut – Hex.	1
1016	224278	Cover – Rewind Starter	1

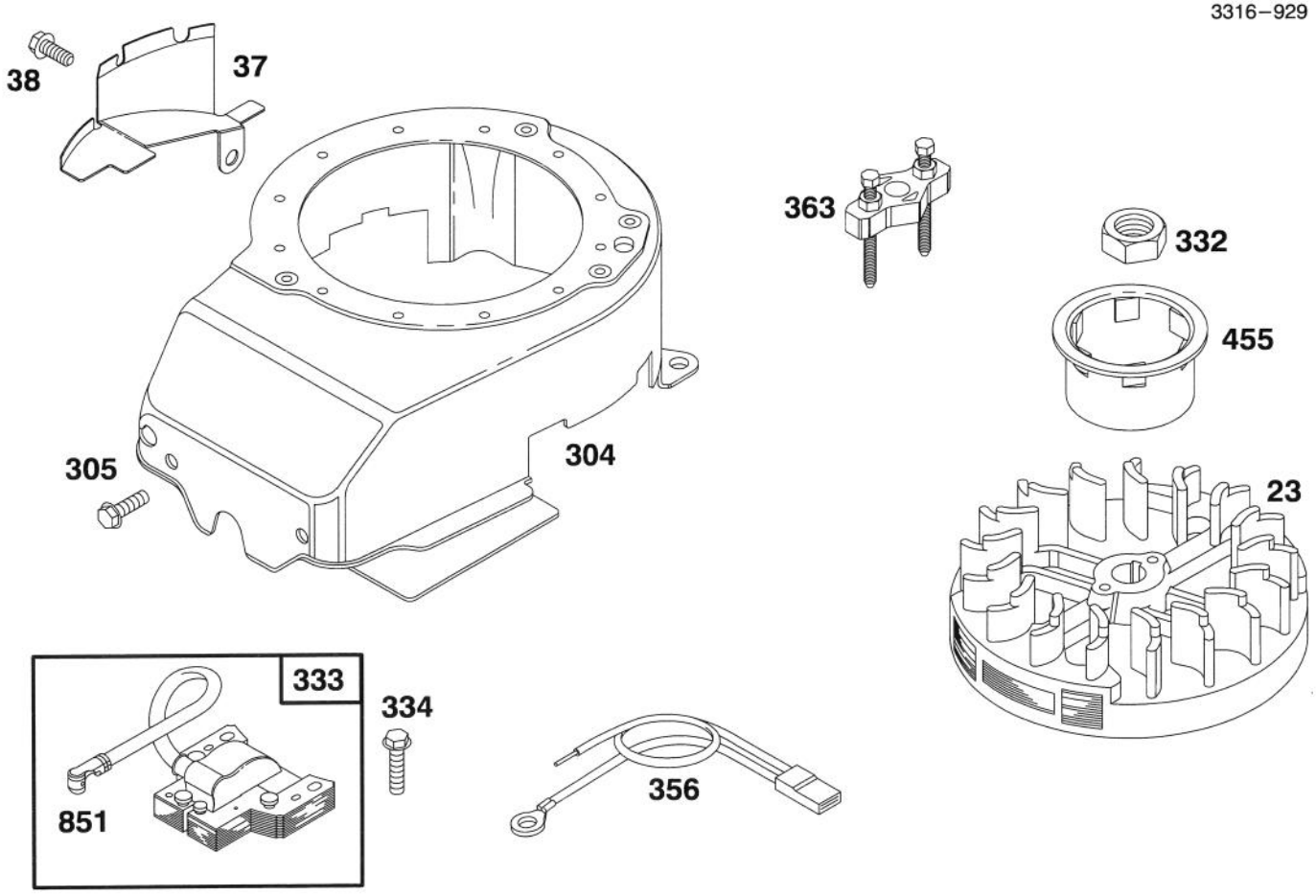

Assemblies include all parts shown in frames.

ENGINE BRIGGS & STRATTON MODEL 127802-0514-21

Ref. No.	Part No.	Description	No. Used
23	492177	Flywheel	1
37	224511	Guard – Flywheel	1
38	94786	Screw – Hex. Head	1
304	493293	Housing – Blower	1
305	94786	Screw – Sem	1
332	92284	Nut – Flywheel	1

Ref. No.	Part No.	Description	No. Used
333	802574	Armature – Magneto	1
334	94731	Screw – Sem	1
356	398808	Wire – Ground	1
363	19069	Puller – Flywheel	1
455	224250	Cup – Starter	1
851	493880	Terminal – Ignition Cable	1

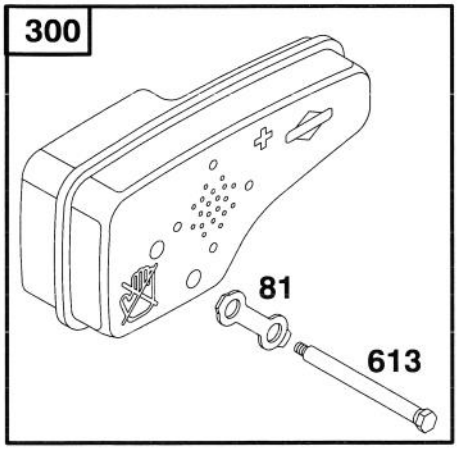

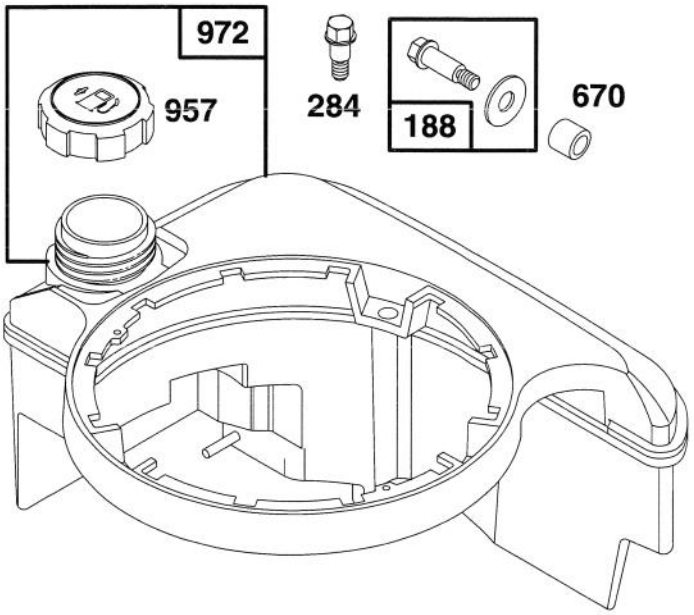

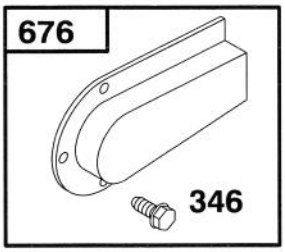

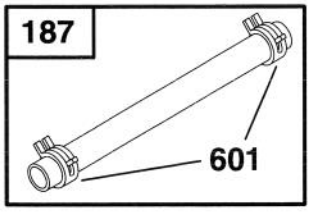

Assemblies include all parts shown in frames.

ENGINE BRIGGS & STRATTON MODEL 127802-0514-21

Ref. No.	Part No.	Description	No. Used
81	223664	Lock – Muffler Screw	1
187	492790	Hose – Fuel	1
188	398540	Screw – Tank Mounting	1
284	94511	Screw – Hex. Head	1
300	496106	Muffler – Exhaust	1
346	93705	Screw – Hex. Head	1

Ref. No.	Part No.	Description	No. Used
601	93807	Clamp – Hose	1
613	94231	Screw – Muffler Mtg.	1
670	280512	Spacer – Fuel Tank	1
676	493871	Deflector – Muffler	1
957	397974	Cap Assy. – Fuel	1
972	495224	Tank Assembly – Fuel	1

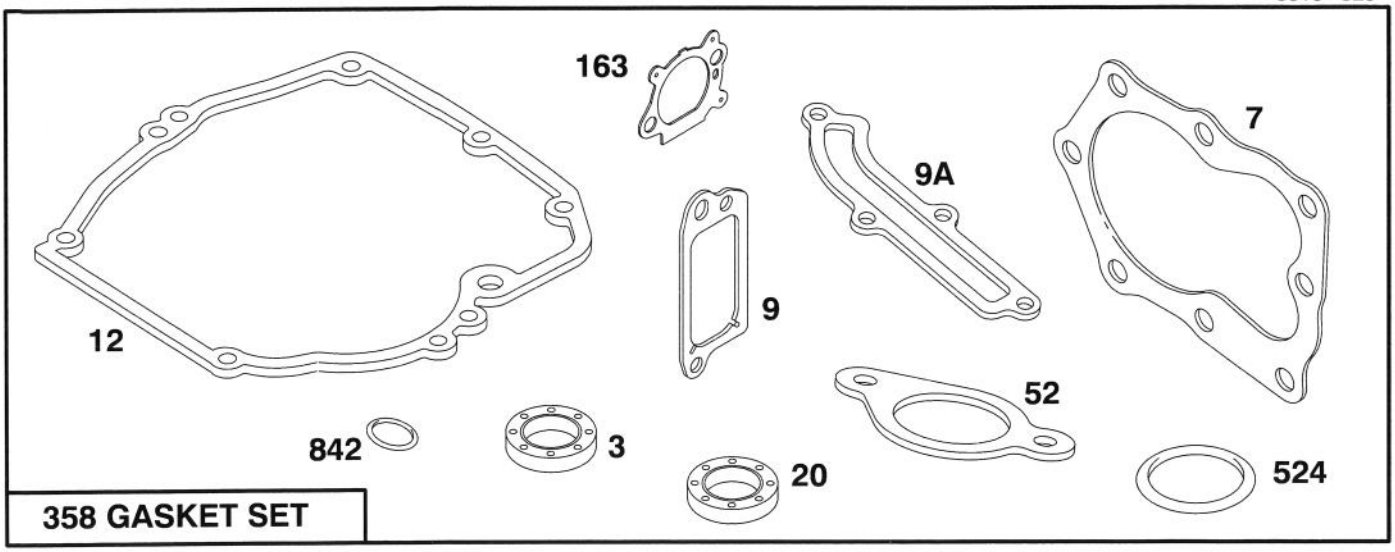

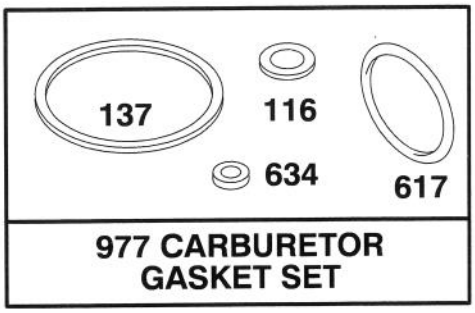

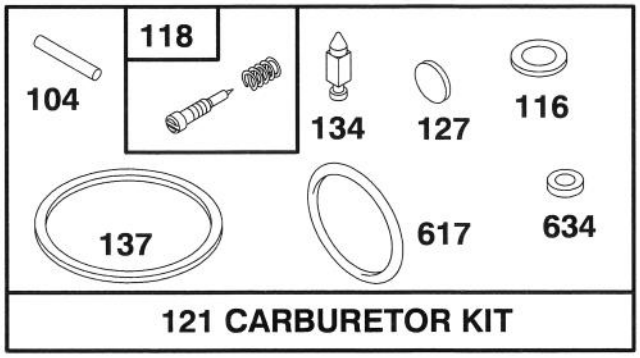

Assemblies include all parts shown in frames.

ENGINE BRIGGS & STRATTON MODEL 127802-0514-21

Ref. No.	Part No.	Description	No. Used
★3	299819	Seal – Oil	1
★7	272200	Gasket – Cylinder Hd.	1
★9	272481	Gasket – Valve Cover	1
★9A	272238	Gasket – Baffle Plate	1
★12	272198	Gasket – Crankcase	1
★20	399781	Seal – Oil	1
★52	272199	Gasket – Intake Elbow	1
●104	231371	Pin – Float Hinge	1
●◆116		Gasket – Sealing (Sold in Kit Only)	1
●118	493765	Valve – Needle	1
121	493762	Carburetor Kit	1
●127		Plug – Welch (Sold in Kit Only)	1
●134	398188	Valve – Inlet (Includes Seat)	1
●◆137		Gasket – Bowl (Sold in Kit Only)	1
★163	272653	Gasket – Air Cleaner	1
358	496117	Gasket Set	1
★524	280393	Seal – Filler Tube	1
●◆617	270344	Seal – Fuel Intake Tube	1
●◆634		Washer – Shaft (Sold in Kit Only)	1
★842	280966	Seal – O-Ring	1
977	490937	Gasket Set – Carburetor	1

● Included in Carburetor Kit–Part No. 493762.
◆ Included in Carburetor Gasket Set–Part No. 490937.
★ Included in Gasket Set–Part No. 496117.

TORO PART NUMBER INDEX

Part No.	Description	Pg. No.	Ref. No.	Qty.
614578	Gearcase	5	10	1
614596	Gear 34 Tooth	5	18	1
614668	Cover – Gear Case	5	2	1
614696	Shaft – Intermediate	5	4	1
14–9959	Wheel & Tire Assembly	4	15	2
16–5989	Housing – Deck	1	22	1
16–8229	Panel – Control	6	25	1
19–4050	Knob	6	20	2
26–0672	Bolt – Blade	3	8	1
27–6230	Bolt – Wheel	4	13	2
27–6230	Bolt – Wheel	1	33	2
36–4780	Washer – Thrust	5	17	3
36–4791	Washer	5	5	2
38–7820	Bearing – Ball	5	15	1
40–1940	Washer	1	30	2
46–1113	Wheel & Tire Assembly 7	1	32	2
46–5520	Lever – Traction	7	6	1
46–6432	Screw – Handle	6	24	1
46–6435	Screw – Handle	6	22	1
46–6980	Support – Cable	6	13	1
46–8081	Guide – Rope	6	18	1
47–2890	Bushing	4	35	2
47–6730	Seal – Oil	4	34	2
48–2060	Bearing – Roller	4	25	2
49–2040	Screw – Taptite	5	1	4
55–3760	Pinion – 15 Tooth	5	3	1
60–8750	Bushing	5	6	2
60–8850	Bushing – Output	5	9	2
60–8890	Gear – Bevel Pinion	5	16	1
62–6660	Spacer	5	11	1
62–7550	Pulley – Driver	3	1	1
63–8590	Screw	4	7	2
65–2720	Ring – Retaining	4	17	4
65–4710	Ring – Friction	4	24	2
65–4720	Spring – Compression	4	18	2
65–4740	Washer – Thrust Keyed	4	19	4
65–4750	Gear – Pinion	4	20	2
65–4760	Washer	4	23	2
65–5210	Screw – Thread Forming	1	12	2
66–0680	Decal – French Regulation	1	20	1
66–6040	Key – Rocking R.H.	4	*	1
66–6050	Key – Rocking L.H.	4	11	1
71–7630	Cap – Throttle Lower	6	5	1
71–7740	Spring – Counterbalance	4	21	1
71–7770	Plate – Securing Rear	4	29	2
71–7820	Pivot – Front	1	28	1
71–7840	Rod – Trigger	4	3	1
71–7860	Grip – Upper	1	13	1
71–7870	Grip – Lower	1	8	1
71–7890	Guide – Belt Rear	1	34	1
71–7900	Cap – Bolt Hinge L.H.	1	15	1
71–7910	Cap – Bolt Hinge R.H.	1	11	1
71–7920	Cover – Belt	1	6	1
71–7930	Trigger – H.O.C.	1	10	1
71–7940	Retainer – Blade	3	4	1
71–7960	Guide – Engine Belt	3	2	1
71–7970	Rod – Link	4	27	1
71–7980	Indicator – H.O.C.	4	28	1
71–7990	Ramp – Discharge	1	26	1
71–8040	Plate – Throttle	6	14	1
71–8060	Spring – Trigger Ret.	4	5	2
71–8080	Saddle – H.O.C.	4	6	1
71–8090	Mount – Handle L.H.	6	*	1
71–8100	Mount – Handle R.H.	6	19	1
71–8130	Bracket – Control	6	15	1
71–8310	Spring – Compression	6	8	1
71–8450	Cover – Spring	4	22	1
71–8580	Spacer – Door	1	19	2
71–8830	Retainer – Shaft	1	27	2
71–8920	Kicker – Front Right	1	2	1
71–9023	Handle Assembly	6	21	1
71–9230	Kicker – Rear Right	1	4	1
71–9250	Kicker – Rear Left	1	21	1
71–9260	Blade – 48cm Recycler	3	5	1
71–9440	Kicker – Front Left	1	23	1
71–9450	V–Belt	4	2	1
71–9460	Bag – Grass	8	5	1
71–9470	Door – Bag	8	3	1
71–9480	Handle – Door	8	2	1
71–9600	Gear Case Ass'y Complete	5	*	1
71–9600	Gear Case Assembly	4	30	1
71–9610	Pulley – Half	5	12	2
71–9620	Shaft – Output	5	7	1
71–9630	Bracket – Traction	4	36	1
71–9800	Door – Discharge	1	18	1
71–9840	Spring – Door	1	17	2
71–9850	Retainer – Belt	4	32	1
71–9900	Frame – Bag	8	4	1
74–1660	Cover – Wheel	4	16	2
74–1670	Spacer – Wheel	4	12	2
80–0510	Stiffener – Blade	3	6	1
86–7990	Screw – Clamp	2	10	1
92–2298	Washer – Spring	7	8	1
92–2299	Lever – Shift	7	7	1
92–3132	Bolt – Shoulder	7	4	1
92–3133	Spacer – Lever Traction	7	5	1
92–7663	Cover – Wheel	4	14	1
92–7852	Shield – Muffler	2	7	1
92–7863	Decal – Deck	1	1	1
92–7864	Decal – Engine	2	1	1
92–7865	Decal – Panel SP	6	23	1
92–7886	Shroud – Engine	2	4	1
92–7887	Screw – Mounting	2	2	2
92–9077	Decal – DIN	1	5	1
92–9677	Arm – Pivot L.H.	4	10	1
92–9680	Arm – Pivot R.H.	4	31	1
93–0335	Bail – Control SP	7	1	1
93–0339	Cover – Throttle Lower	6	4	1
93–0340	Stop – Pivot	7	2	1
93–1116	Cable – Brake	6	9	1
93–1117	Control – Throttle	6	2	1
93–1119	Cable – Traction	6	7	1
93–1120	Decal – Instruction	6	1	1
2210–249	Clamp – Casing	2	11	1
2210–316	Stop – Rope	2	3	1
302–26	Fitting – Grease	4	33	2
322–29	Screw – Hex Hd. Cap	1	16	2
3253–22	Washer – Lock	3	7	1
3256–24	Washer	5	13	1
3256–49	Washer – Flat	7	9	1
3256–22	Washer – Flat	6	12	1
3256–70	Washer – Flat	7	3	2
3284–5	Pin – Groove	1	9	1
3290–378	Tie – Cable	2	5	1
3290–378	Tie – Cable	6	10	1
3296–2	Nut – Lock	7	10	1

*Not Illustrated

TORO PART NUMBER INDEX (Cont.)

Part No.	Description	Pg. No.	Ref. No.	Qty.
3296–5	Nut	5	14	1
3296–5	Nut – Lock	4	9	2
3296–5	Nut – Lock	1	29	2
3296–42	Nut – Lock	6	17	2
32112–11	Nut – Push	1	25	1
32112–13	Nut – Push	4	8	1
32121–63	Pin – Groove	5	8	2
32144–4	Screw – Tapping	4	1	6
32144–4	Screw – Tapping	3	3	2
32144–4	Screw – Tapping	1	24	10
32144–31	Screw – Tapping	4	4	1
32144–70	Screw – Tapping	1	7	1
32144–73	Screw – Hex Washer Hd.	2	6	3
32144–97	Screw – Phillips Hd.	1	14	2
32144–97	Screw – Phillips Pan Hd.	6	3	5
32144–98	Screw – Phillips Pan Hd.	6	16	4
32144–99	Screw – Phillips Pan Hd.	6	6	2
32144–102	Screw – Engine	2	8	3
32144–111	Screw – Phillips Hd.	1	3	8
32144–111	Screw – Thr'd Form	8	1	5
32151–93	Ring – Grip	4	26	1

*Not Illustrated

PRODUCT CHANGES

In an effort to make improvements available to TORO owners as quickly as possible, minor changes are incorporated into Toro's products from time to time that do not become immediately shown in the Parts Catalog. If such a change has been made in your unit, which is not reflected in your manual, see your TORO Distributor or his Authorized TORO Service Dealer for information and part numbers.

COUNTRIES OTHER THAN THE UNITED STATES OR CANADA

Customers who have purchased TORO products exported from the United States or Canada should contact their Toro Distributor (Dealer) to obtain guarantee policies for your country, province or state. If for any reason you are dissatisfied with your Distributor's service or have difficulty obtaining guarantee information, contact the TORO importer. If all other remedies fail, you may contact us at The Toro Company.

MAINTENANCE RECORD

Date								

Compliance with Radio Interference Regulations Certified.
Certifie Conforme au Reglement sur le Brouillage Radioelectrique.

Litho in U.S.A.