FORM NO. 3316–932

TORO®

MODEL NO. 26630BC–4900001 & UP

PARTS CATALOG

53cm REAR BAGGING MOWER

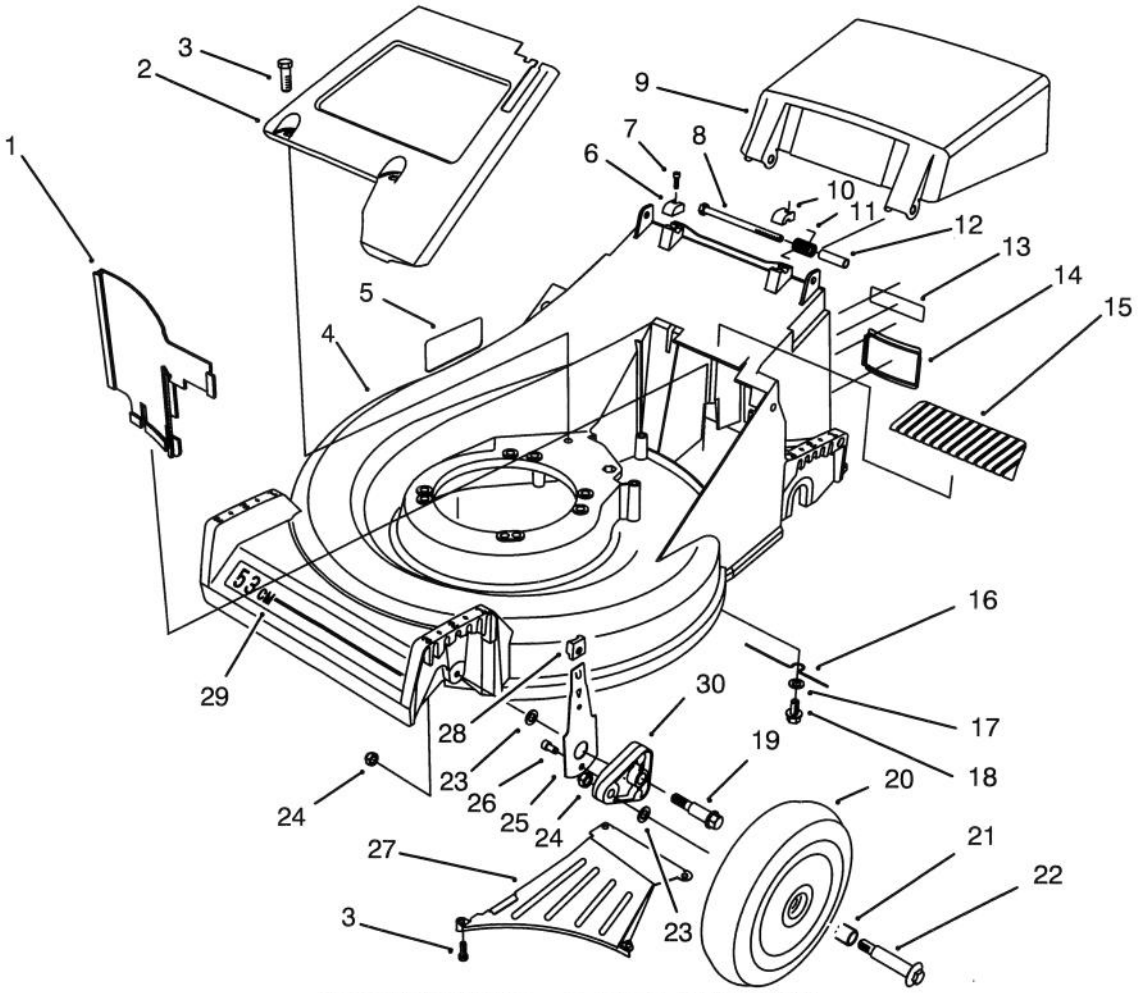

C–1568A

HOUSING ASSEMBLY

Ref. No.	Part No.	Description	No. Used
1	66–0020	Panel – Vertical	1
2	65–5660	Panel – Screen	1
3	32144–70	Screw – Cap Hex. Hd.	6
4	16–1769	Housing – 53cm (Incl. Ref. #5 & 29)	1
5	92–9077	Decal – Danger	1
6	71–7910	Cap – Hinge Bolt R.H.	1
7	65–5210	Screw – Thread Forming	2
8	322–29	Screw – Hex Hd. Cap	2
9	71–9800	Door – Discharge	1
10	71–7900	Cap – Hinge Bolt L.H.	1
11	71–9840	Spring – Door	2
12	71–8580	Spacer – Door	2
13	66–0680	Decal – French Regulation	1
14	71–9650	Access – Cover	1

Ref. No.	Part No.	Description	No. Used
15	71–9920	Cover – Top	1
16	66–0620	Retainer – Belt	1
17	3256–24	Washer – Flat	1
18	32144–15	Screw – Hex Flange Hd.	1
19	66–0560	Screw – Shoulder	2
20	14–9949	Wheel & Tire Assembly (Incl. Ref. #21)	2
21	27–6250	Bushing – Wheel	2
22	27–6231	Bolt – Wheel	2
23	40–1940	Washer – Wheel Bolt	4
24	3296–6	Nut – Lock	4
25	66–0540	Arm – Spring Front	2
26	65–5220	Screw – Cap Socket Hd.	2
27	71–9640	Ramp – Discharge	1
28	25–7740	Knob – Arm	2

© The TORO Company –1994
All Rights Reserved

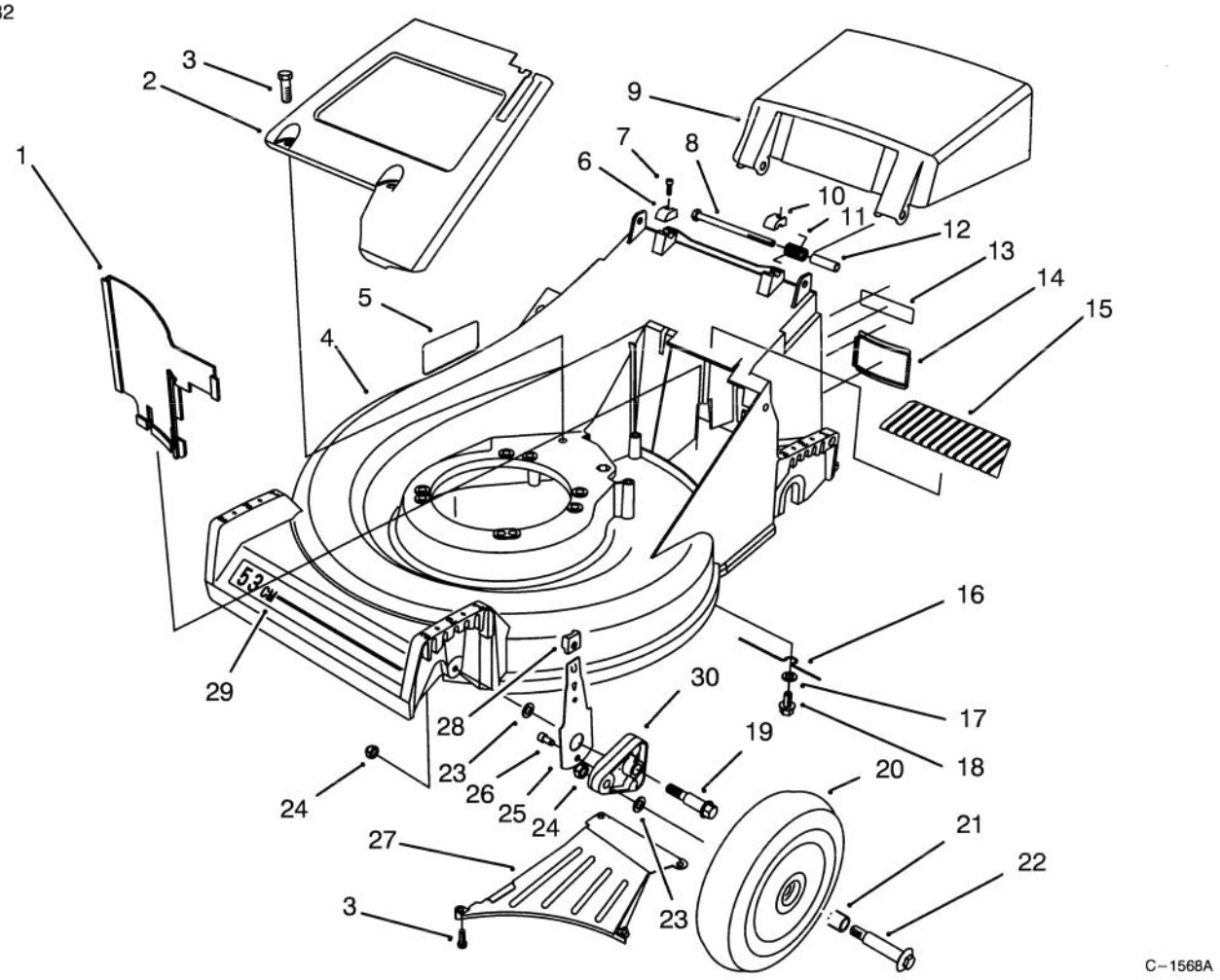

HOUSING ASSEMBLY (Continued)

Ref. No.	Part No.	Description	No. Used
29	71–9870	Decal – Deck 53cm	1
30	66–0580	Arm – Pivot	2

Ref. No.	Part No.	Description	No. Used

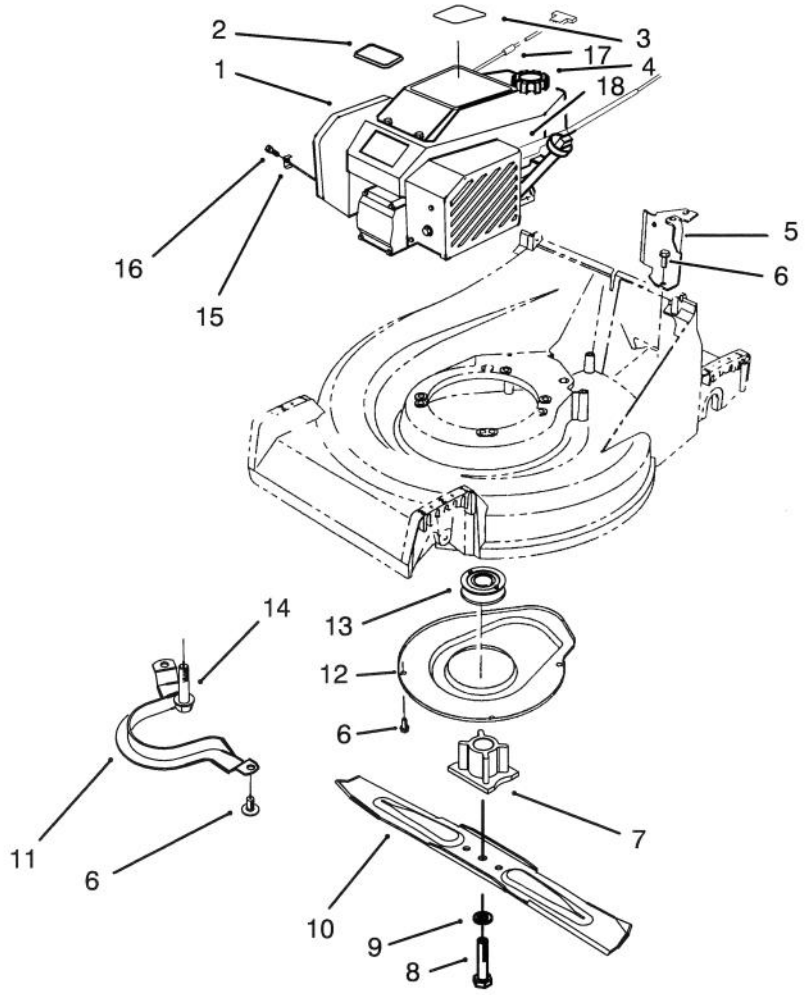

C–2084

ENGINE ASSEMBLY

Ref. No.	Part No.	Description	No. Used
1	93–1368	Engine	1
2	92–2289	Plate – TORO Logo	1
3	92–7857	Decal – Recoil	1
4	55–3570	Gas Cap Assembly	1
5	66–0030	Bracket – Cable Support	1
6	32144–70	Screw – Hex Hd. Cap	7
7	62–7540	Retainer – Blade	1
8	26–0670	Bolt – Blade	1
9	3253–22	Washer – Blade	1

Ref. No.	Part No.	Description	No. Used
10	62–7700	Blade – 21"	1
11	66–0570	Guide – Belt	1
12	65–5200	Cover	1
13	62–7550	Pulley – Engine	1
14	32144–102	Screw – Thread Forming	3
15	2210–249	Clamp – Throttle	1
16	86–7990	Screw – Clamp	1
17	2210–316	Stop – Rope	1
18	77–7120	Cover – Brake	1

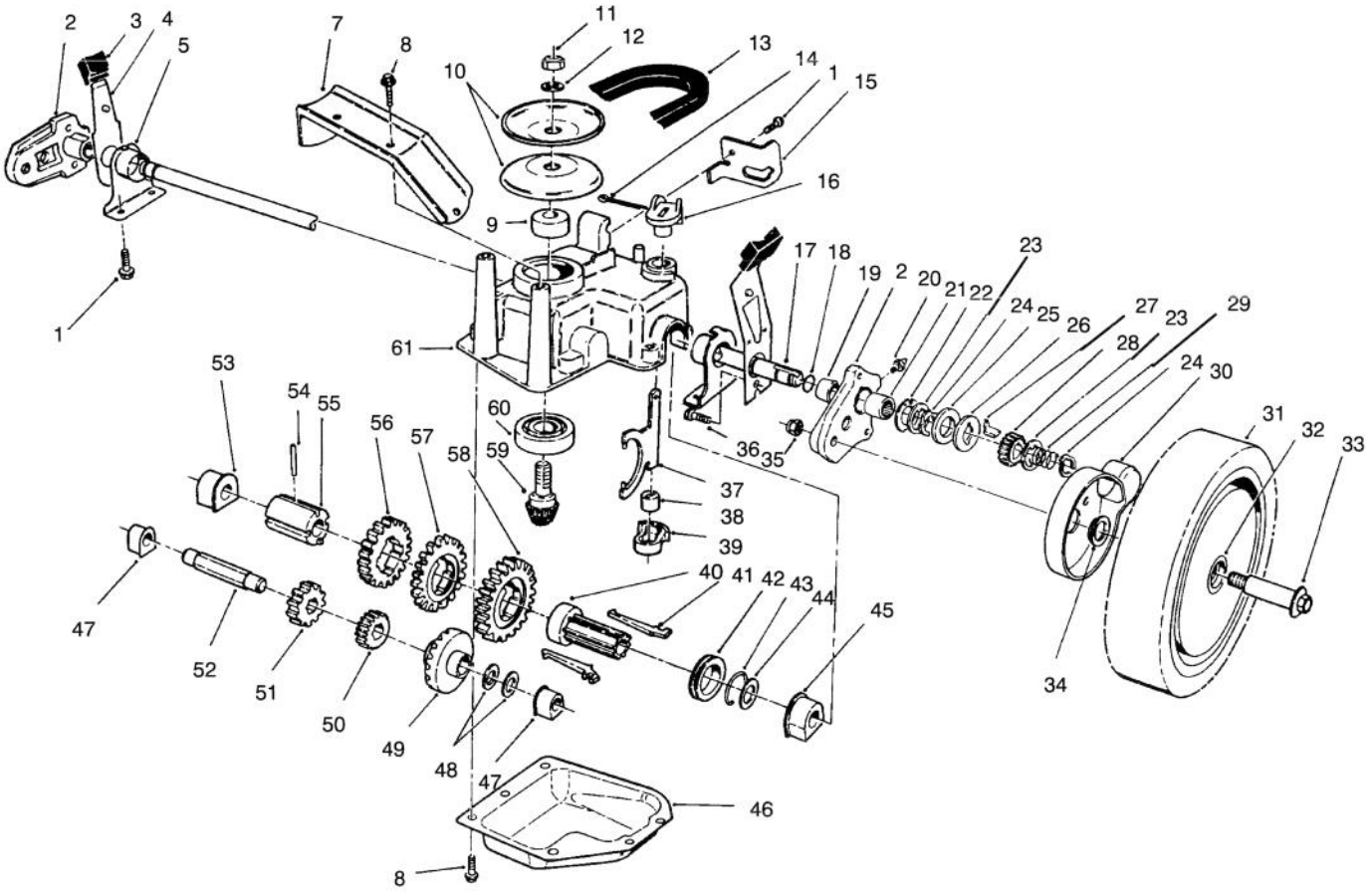

GEAR CASE ASSEMBLY

Ref. No.	Part No.	Description	No. Used
1	32144–70	Screw – Hex. Washer Hd.	5
2	65–5042	Pivot Arm Assembly (Incl. Ref. #19–21)	2
3	25–7740	Knob – Arm	2
4	65–5440	Spring Arm Assembly	2
5	66–0360	Cap – End	2
7	65–5190	Bracket – Belt Guide	1
8	49–2040	Screw – Self Tapping	8
9	62–6660	Spacer	1
10	60–8840	Pulley – Half	2
11	3296–5	Nut – Lock	1
12	3256–24	Washer – Flat	1
13	66–0210	V–Belt	1
14	3272–5	Pin – Cotter	1
15	76–2930	Retainer – Cable	1
16	76–0920	Lever – Shift	1
17	65–4770	Shaft – Output	1
18	237–153	Seal – "O"Ring	2
19	70–9760	Bushing – Sleeve	2
20	302–56	Fitting – Grease	2
21	48–2060	Bearing –Needle	2
22	65–4730	Washer – Thrust (Inner)	2
23	65–4740	Washer – Thrust (Keyed)	4

Ref. No.	Part No.	Description	No. Used
24	65–2720	Ring – Retaining	4
25	65–4710	Ring – Friction	2
26	65–4760	Washer –Clutch	2
27	66–6050	Key – Rocking (L.H.)	1
*	66–6040	Key – Rocking (R.H.)	1
28	65–4750	Pinion	2
29	65–4720	Spring – Compression	2
30	74–1660	Cover – Wheel	2
31	14–9959	Wheel Tire & Gear Assy. (Incl. Ref. #32)	2
32	27–6250	Bushing – Wheel	4
33	27–6231	Bolt – Wheel	2
34	74–1671	Spacer – Wheel Cover	2
35	3296–6	Nut – Lock	2
36	65–5220	Screw – Socket Hd. Cap	2
37	60–8870	Yoke – Shift	1
38	29–9570	Bushing – Yoke	1
39	60–8810	Retainer – Shift Fork	1
40	76–0780	Sleeve – Shift Key	1
41	76–0760	Key – Shift	2
42	76–0770	Collar – Shift	1
43	65–5250	Clip – Spring	1
44	36–4780	Washer – Thrust	1

*Not Illustrated

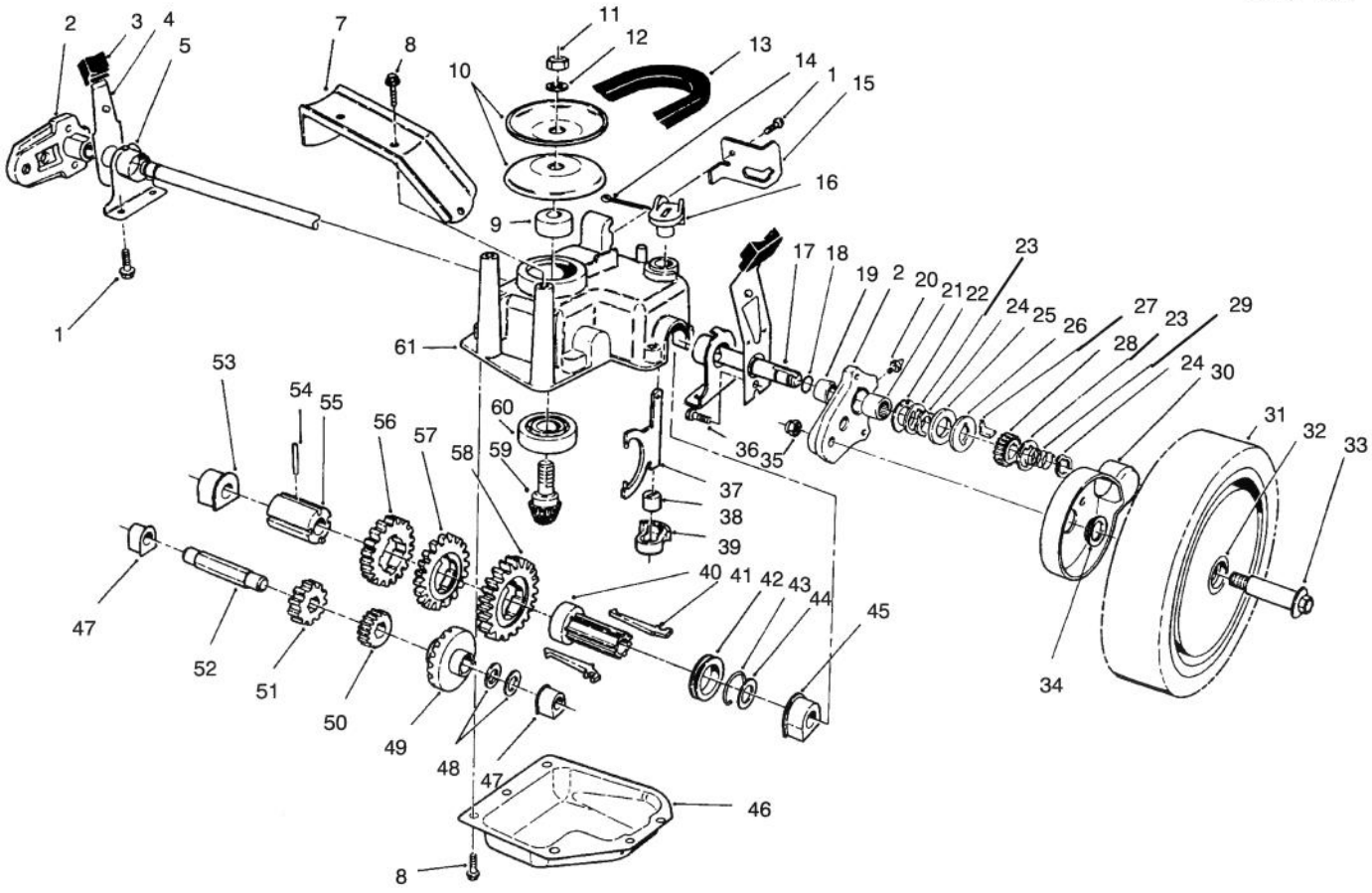

C–1555

GEAR CASE ASSEMBLY (Continued)

Ref. No.	Part No.	Description	No. Used
45	60–8770	Bushing – Output Shaft	1
46	60–8730	Cover – Gear Case	1
47	60–8750	Bushing – Intrmdt. Shaft	2
48	36–4791	Washer – Thrust	2
49	55–3760	Gear – Pinion 15T	1
50	55–3780	Gear – Pinion 20T	1
51	55–3800	Gear – Pinion 25T	1
52	60–8800	Shaft – Intermediate	1
53	60–8850	Bushing – Output Shaft	1

Ref. No.	Part No.	Description	No. Used
54	32121–120	Pin – Coil	1
55	60–8790	Sleeve – Gear	1
56	55–3810	Gear – 39T (3rd Gear)	1
57	55–3790	Gear – 44T (2nd Gear)	1
58	55–3770	Gear – 49T (1st Gear)	1
59	60–8890	Pinion – Bevel	1
60	38–7820	Bearing – Ball	1
61	60–8710	Case – Gear (Upper)	1
*	62–6673	Gear Case Assy. Complete	1

*Not Illustrated

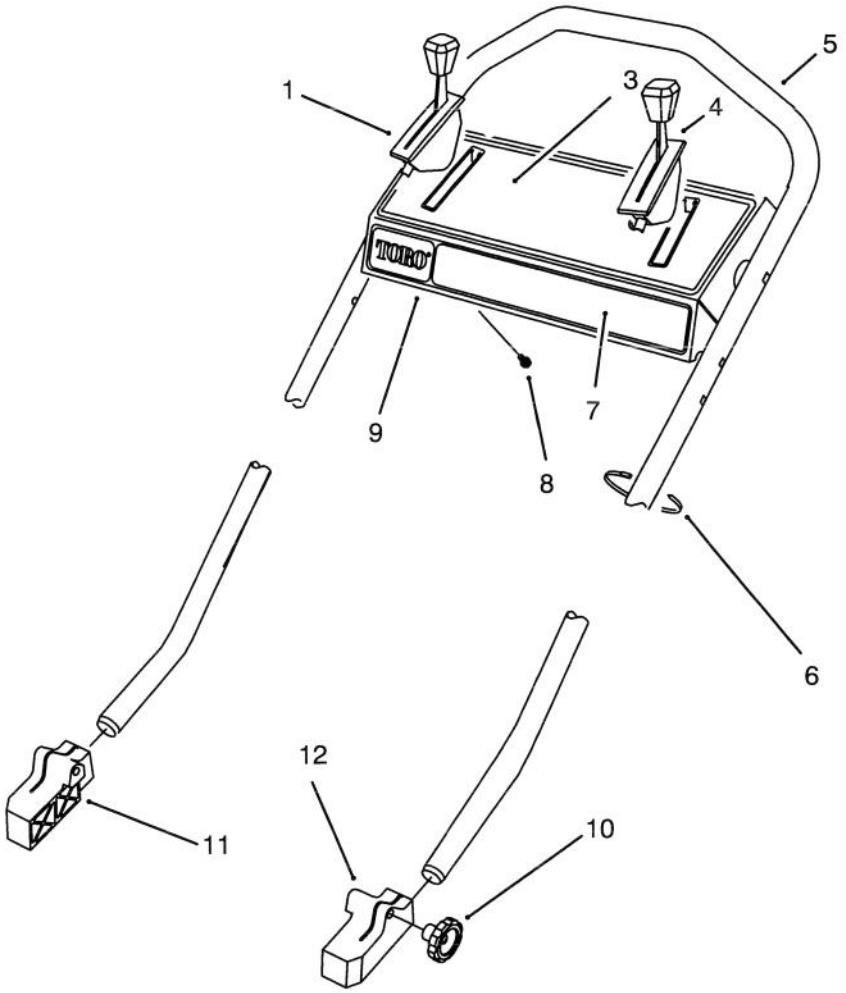

C–1569A

HANDLE ASSEMBLY

Ref. No.	Part No.	Description	No. Used
1	76–2713	Control – Ground Speed	1
3	93–0300	Decal – Instruction	1
4	93–1111	Control – Throttle Bend Type #3 Sheath Lg. 57" (145cm) Wire Lg. (2 1/8")	1
5	71–9690	Handle	1

Ref. No.	Part No.	Description	No. Used
6	3290–378	Tie – Cable	5
7	71–9873	Decal – Panel	1
8	32104–76	Screw – Self Tapping	5
9	16–8239	Control Panel Assembly (Incl. Ref. #3, & 7)	1
10	19–4050	Knob – Handle Release	2
11	71–8100	Mount – Handle R.H.	1
12	71–8090	Mount – Handle L.H.	1

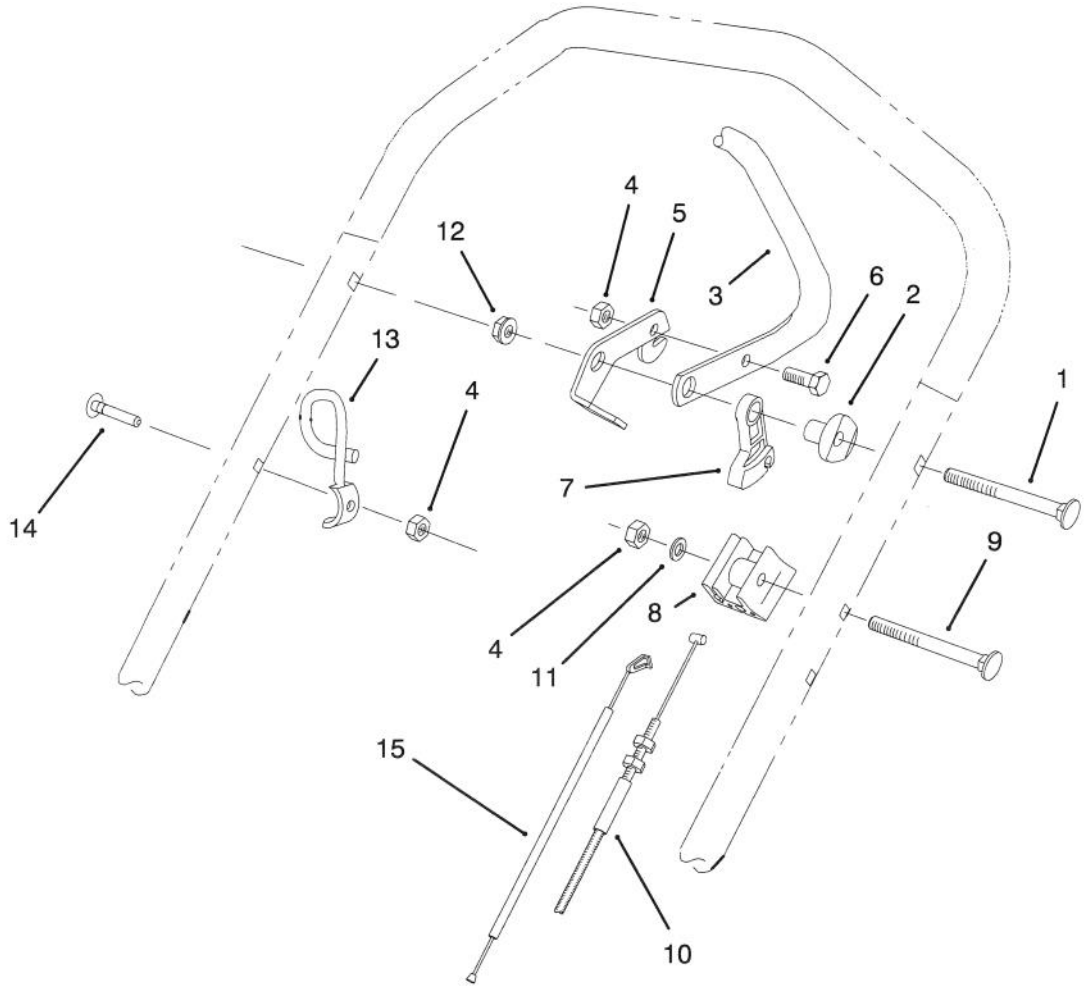

C–2083

TRACTION CONTROL ASSEMBLY

Ref. No.	Part No.	Description	No. Used
1	17–9426	Screw – Handle	2
2	66–0330	Support – Spacer	2
3	52–7430	Control Bar Assembly	1
4	3296–42	Nut – Lock	3
5	66–5350	Lever – Control	1
6	321–3	Screw – Cap Hex. Hd.	1
7	46–5520	Lever – Traction	1
8	71–0960	Support – Cable	1

Ref. No.	Part No.	Description	No. Used
9	46–6432	Screw – Handle	1
10	71–0620	Cable – Traction	1
11	3256–22	Washer – Flat	1
12	3296–58	Nut – Lock	2
13	46–8081	Guide – Rope	1
14	46–6435	Screw – Handle	1
15	93–1112	Cable – Brake	1

3316–932

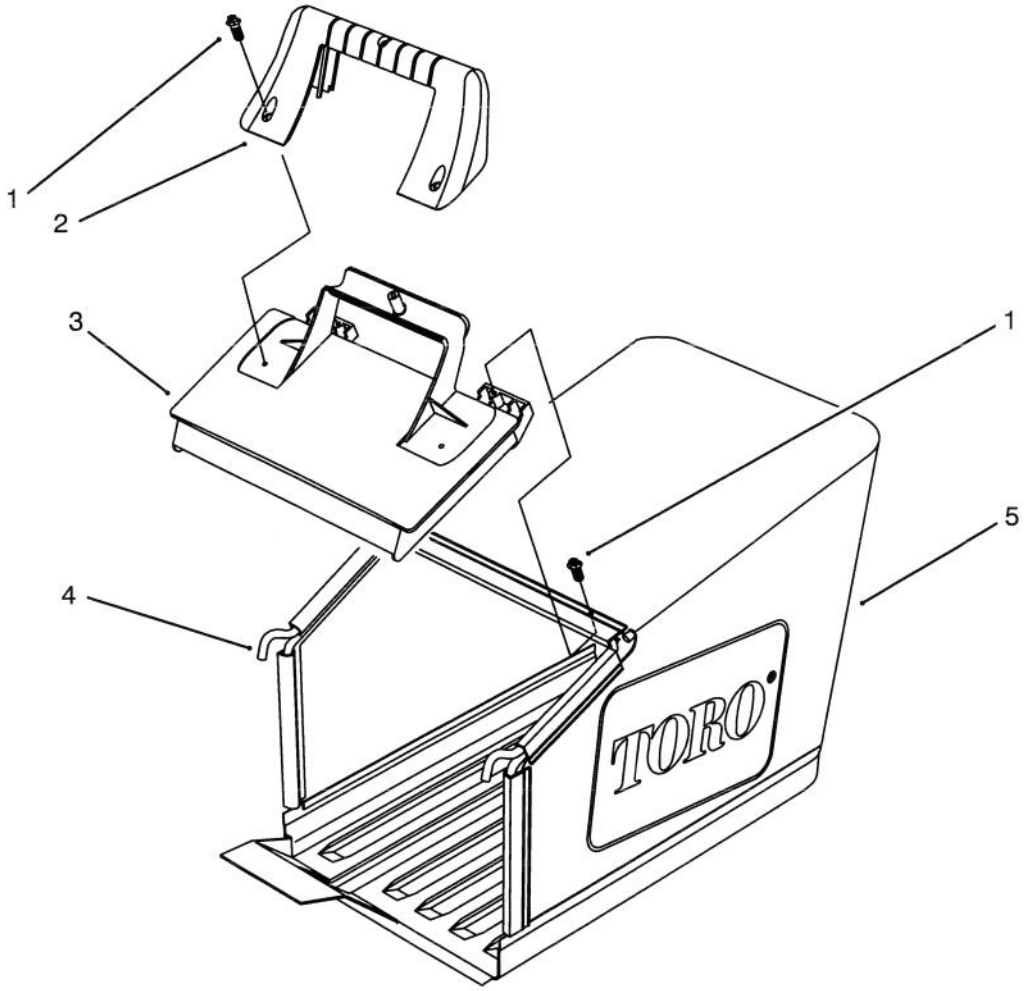

C–1570

GRASS BAG ASSEMBLY

Ref. No.	Part No.	Description	No. Used
1	32144–111	Screw – Index Hex Washer Head	5
2	71–9480	Handle – Door	1

Ref. No.	Part No.	Description	No. Used
3	71–9470	Door – Bag	1
4	71–9930	Frame – Grass Bag	1
5	71–9680	Bag – Grass 53cm	1

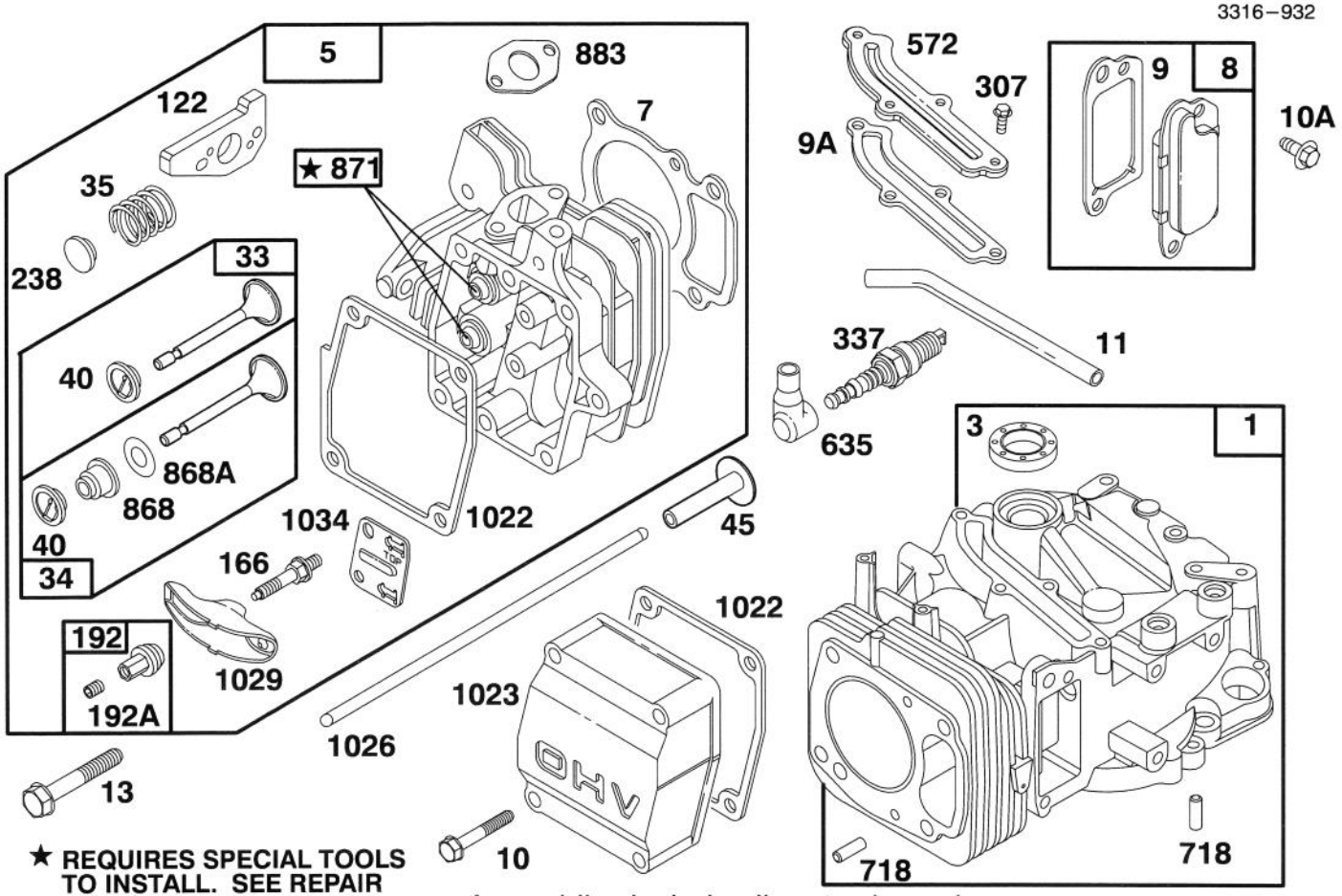

★ **REQUIRES SPECIAL TOOLS TO INSTALL. SEE REPAIR INSTRUCTION MANUAL.**

Assemblies include all parts shown in frames.

ENGINE GTS 150

Ref. No.	Part No.	Description	No. Used
1	77–7590	Cylinder Assy.	1
★3	77–9060	Seal – Oil	1
5	77–7730	Head – Cylinder	1
★7	77–7740	Gasket – Cylinder Head	1
8	77–9300	Breather Assy.	1
★9	77–9250	Gasket – Breather	1
★9A	77–7410	Gasket – Breather	1
10	77–7360	Screw – Hex. Head (Valve Cover)	1
10A	77–9200	Screw – Hex. Head	1
11	77–9410	Tube – Breather	1
13	77–7630	Screw – Cylinder Head	1
33	77–7860	Valve – Exhaust	1
34	77–7880	Valve – Intake	1
35	77–7810	Spring – Valve	1
40	77–7870	Retainer – Spring	1
45	77–7610	Tappet – Valve	1
●122	77–7820	Adapter Assy.	1
166	77–7780	Stud – Rocker Arm	1

Ref. No.	Part No.	Description	No. Used
192	77–7910	Ball & Screw – Rocker Arm	1
192A	77–9310	Screw – Set	1
238	77–7800	Cap – Valve	1
307	77–7420	Screw – Breather Cover Mtg.	1
337	77–7330	Plug – Spark	1
572	77–7400	Cover – Breather	1
635	77–7340	Elbow – Spark Plug	1
718	77–7600	Pin – Cylinder	1
★868	77–7890	Seal Assy. – Valve	1
★868A	77–7900	Gasket – Valve	1
871	77–7850	Bushing – Guide	1
★883	77–7760	Gasket – Exhaust	1
★1022	77–7320	Gasket – Rocker Cover	1
1023	77–9320	Cover – Valve	1
1026	77–7620	Rod – Push	1
1029	77–7790	Arm – Rocker	1
1034	77–7770	Guide – Push Rod	1

★ Included in Gasket Set–Part No. 77–8900
● Included in Carburetor Overhaul Kit–Part No. 77–8920

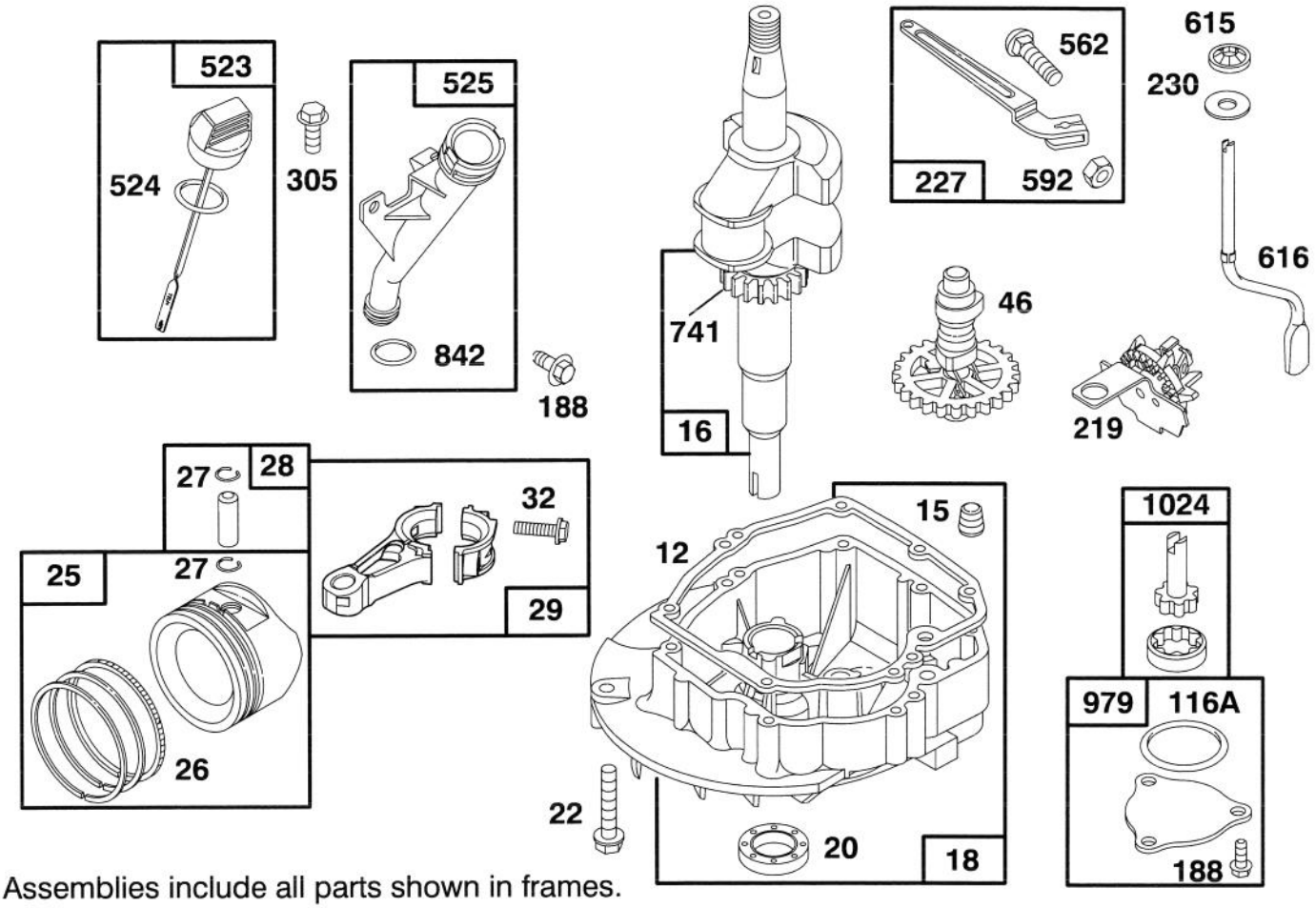

Assemblies include all parts shown in frames.

ENGINE GTS 150

Ref. No.	Part No.	Description	No. Used
★12	77–7550	Gasket – Engine Base	1
15	77–9240	Plug – Pipe	1
16	77–9330	Crankshaft	1
		Note: Order Part No. 77–7540 For Timing Gear Key.	1
18	77–7560	Base – Engine	1
★20	77–7570	Seal – Oil	1
22	77–7090	Screw – Engine Base	1
25	77–7690	Piston Assy. (Std.)	1
26	77–7700	Ring Set (Std.)	1
27	77–7710	Lock – Piston Pin	1
28	77–9340	Pin Assy. – Piston	1
29	77–7670	Rod – Connecting	1
32	77–9350	Screw – Connecting Rod	1
46	77–7490	Gear – Cam	1
★116A	77–7660	O-Ring	1

Ref. No.	Part No.	Description	No. Used
188	77–9360	Screw – Hex. Head	1
219	77–7500	Gear – Governor	1
227	77–7370	Lever Assy. – Governor	1
230	77–7470	Washer	1
305	77–8310	Screw – Hex. Head	1
523	77–7260	Dipstick – Oil	1
★524	77–7270	Seal – O-Ring	1
525	77–7280	Tube – Oil Filler	1
562	77–7380	Bolt – Governor Lever	1
592	77–7390	Nut – Hex.	1
615	77–7480	Pushnut	1
616	77–7460	Crank – Governor	1
741	77–7530	Gear – Timing	1
★842	77–7300	Seal – O-Ring	1
979	77–7650	Cover – Oil Pump	1
1024	77–7640	Pump – Oil	1

★ Included in Gasket Set–Part No. 77–8900

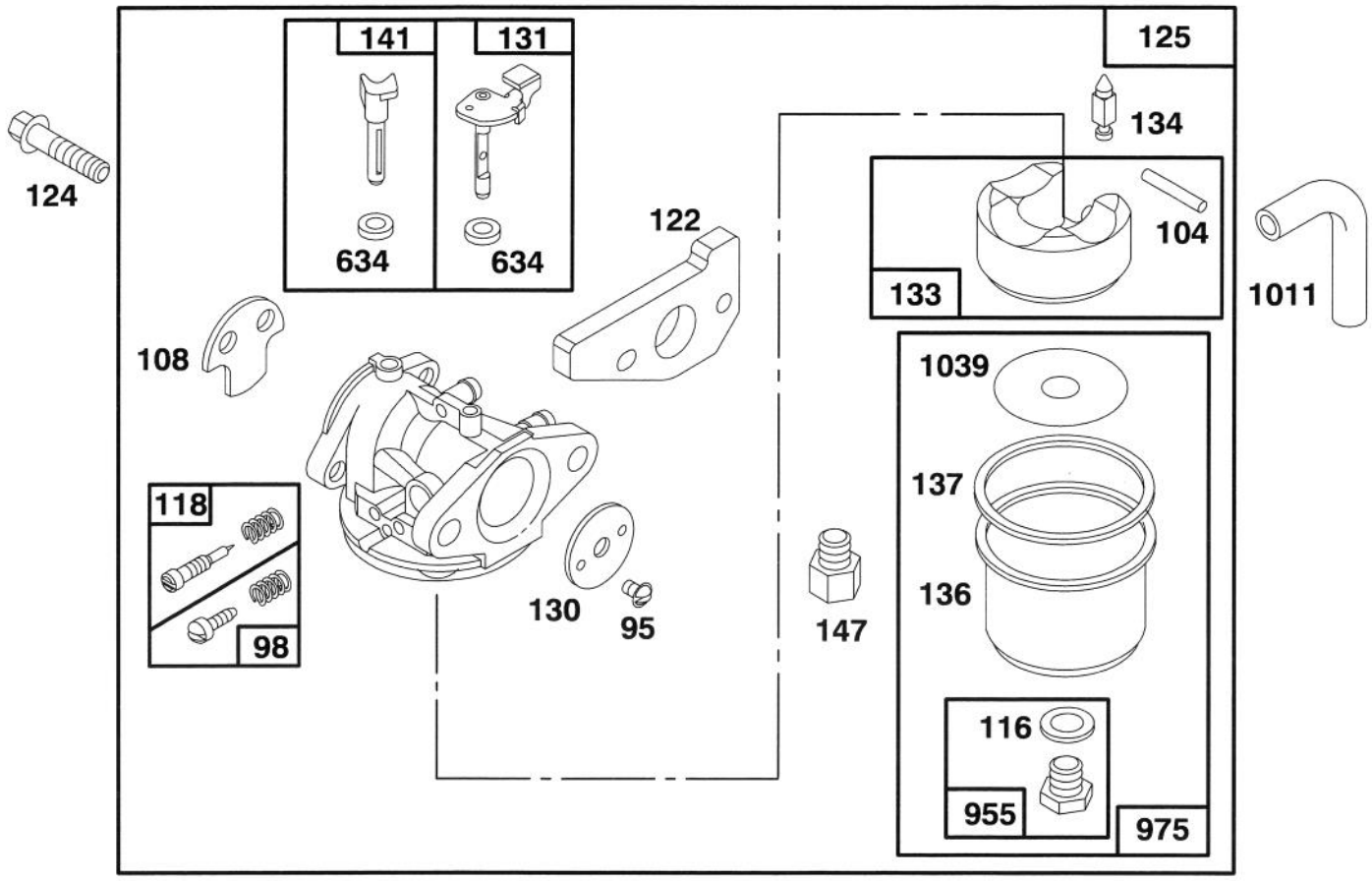

Assemblies include all parts shown in frames.

ENGINE GTS 150

Ref. No.	Part No.	Description	No. Used
95	77–8090	Screw – Valve Mtg.	1
98	77–8240	Screw – Idle Adj.	1
●104	77–8180	Pin – Float Hinge	1
108	77–7080	Valve – Choke	1
●◆116	77–8210	Sealing – Gasket	1
●118	77–8230	Valve & Spring – Needle	1
●122	77–7820	Adapter Assy.	1
124	77–7970	Screw – Hex. Head (carb. mtg.)	1
125	77–8050	Carburetor Assy.	1
130	77–8080	Valve – Throttle	1
131	77–8160	Shaft – Throttle	1
133	77–8170	Float – Carburetor	1
●134	77–8110	Valve – Inlet (Includes Seat)	1

Ref. No.	Part No.	Description	No. Used
136	77–7240	Bowl – Fuel	1
●◆137	77–8200	Gasket – Float Bowl	1
141	77–8130	Shaft – Choke	1
147	77–8120	Adapter – Jet **Note:** For High Altitude Jet Order Part No. 77–9000	1
◆634	77–8150	Washer – Seal	1
955	77–8220	Screw – Hex. Head	1
975	77–8190	Bowl Assy. – Carburetor	1
1011	77–8040	Tube – Vent	1
●1039	77–7250	Limiter – Float	1

● Included in Carb. Overhaul Kit Part No. 77–8920

◆ Included in Carb. Gasket Set Part No. 77–8930

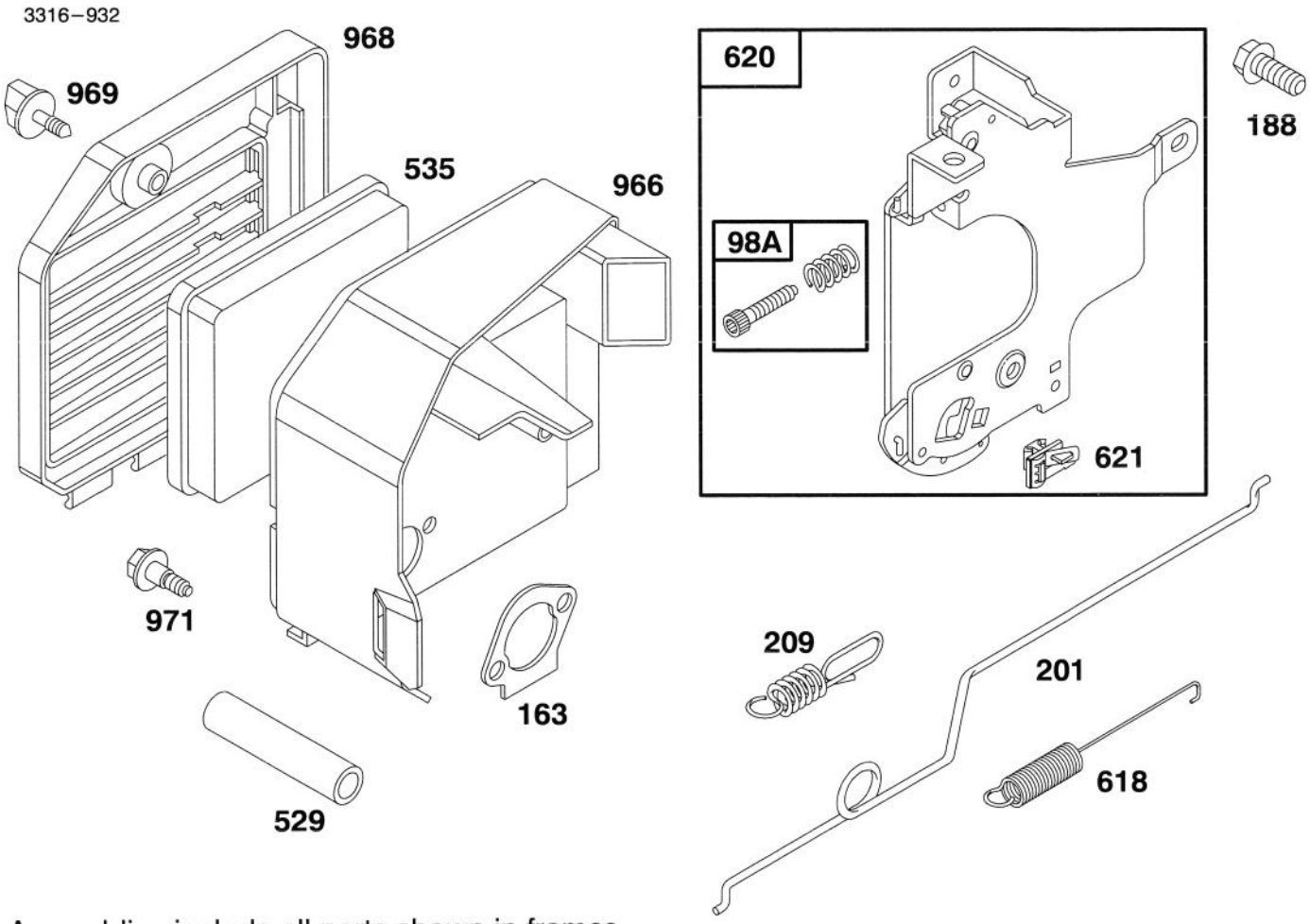

Assemblies include all parts shown in frames.

ENGINE GTS 150

Ref. No.	Part No.	Description	No. Used
98A	77–8020	Screw Assy. – Speed Adj.	1
★163	77–7960	Gasket – Air Cleaner	1
188	77–9360	Screw – Hex. Head	1
201	77–7980	Link – Governor	1
209	77–7990	Spring – Governor	1
529	77–9470	Tube – Breather	1
535	77–7950	Element – Filter	1

Ref. No.	Part No.	Description	No. Used
618	77–8140	Spring – Choke	1
620	77–8000	Bracket – Carburetor	1
621	77–8010	Switch – Stop	1
966	77–7940	Base – Air Cleaner	1
968	77–7040	Cover – Air Cleaner	1
969	77–7920	Screw – Air Cleaner	1
971	77–7930	Screw – Air Cleaner	1

★ Included in Gasket Set–Part No. 77–8900

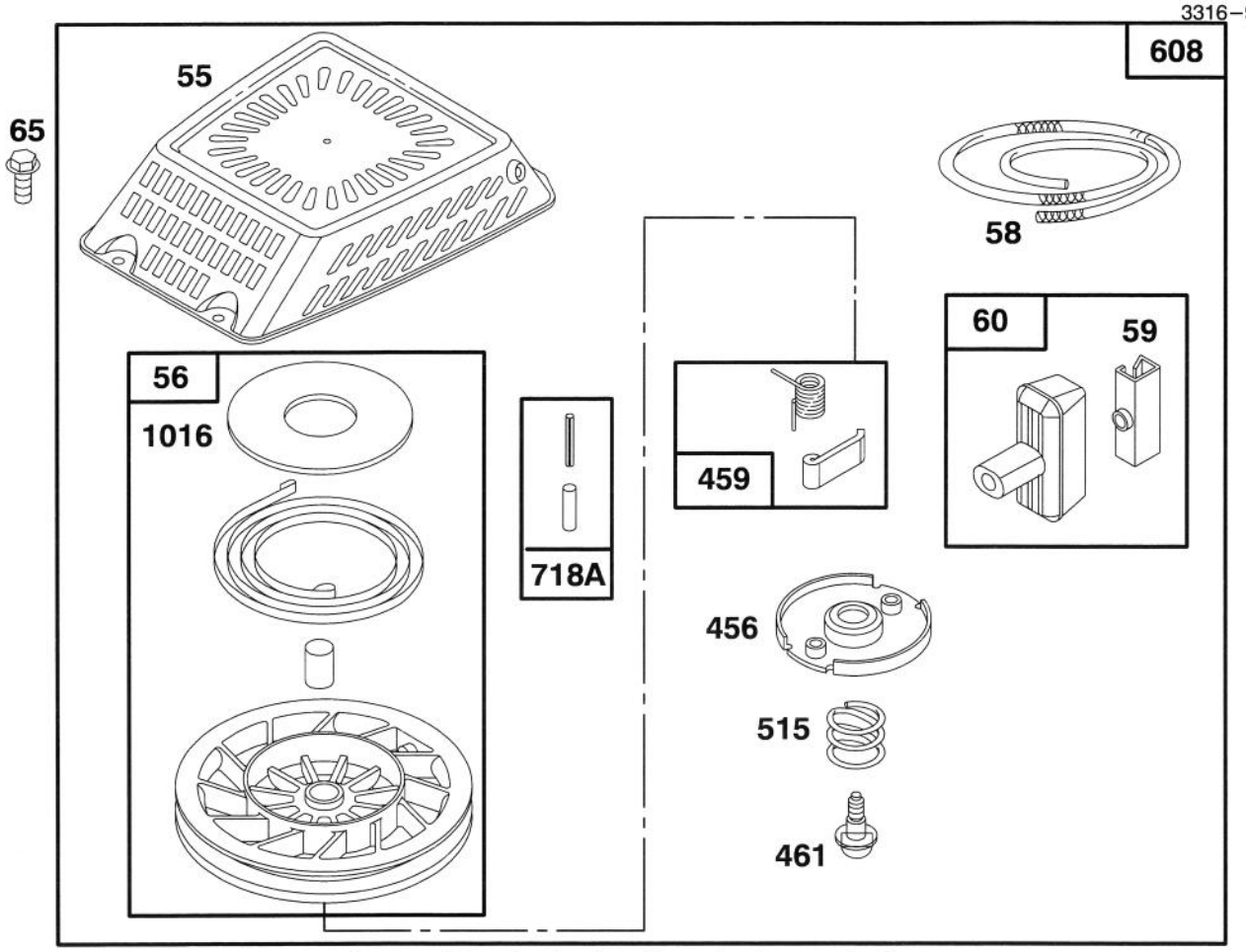

Assemblies include all parts shown in frames.

ENGINE GTS 150

Ref. No.	Part No.	Description	No. Used
55	77–8890	Housing – Rewind Starter	1
56	77–9270	Pulley – Rewind Starter	1
58	77–8480	Rope – Starter (Cut To Suit)	1
59	77–9380	Insert – Rewind Handle	1
60	77–9390	Handle – Rewind Starter	1
65	77–8300	Screw – Hex. Head	1

Ref. No.	Part No.	Description	No. Used
456	77–8470	Retainer – Rewind Starter	1
459	77–8530	Pawl – Starter	1
461	77–8490	Screw – Rewind Starter	1
515	77–8500	Spring – Torsion	1
608	77–9400	Starter Assy. – Rewind	1
718A	77–8550	Pin – Spring	1
1016	77–8570	Cover – Spring	1

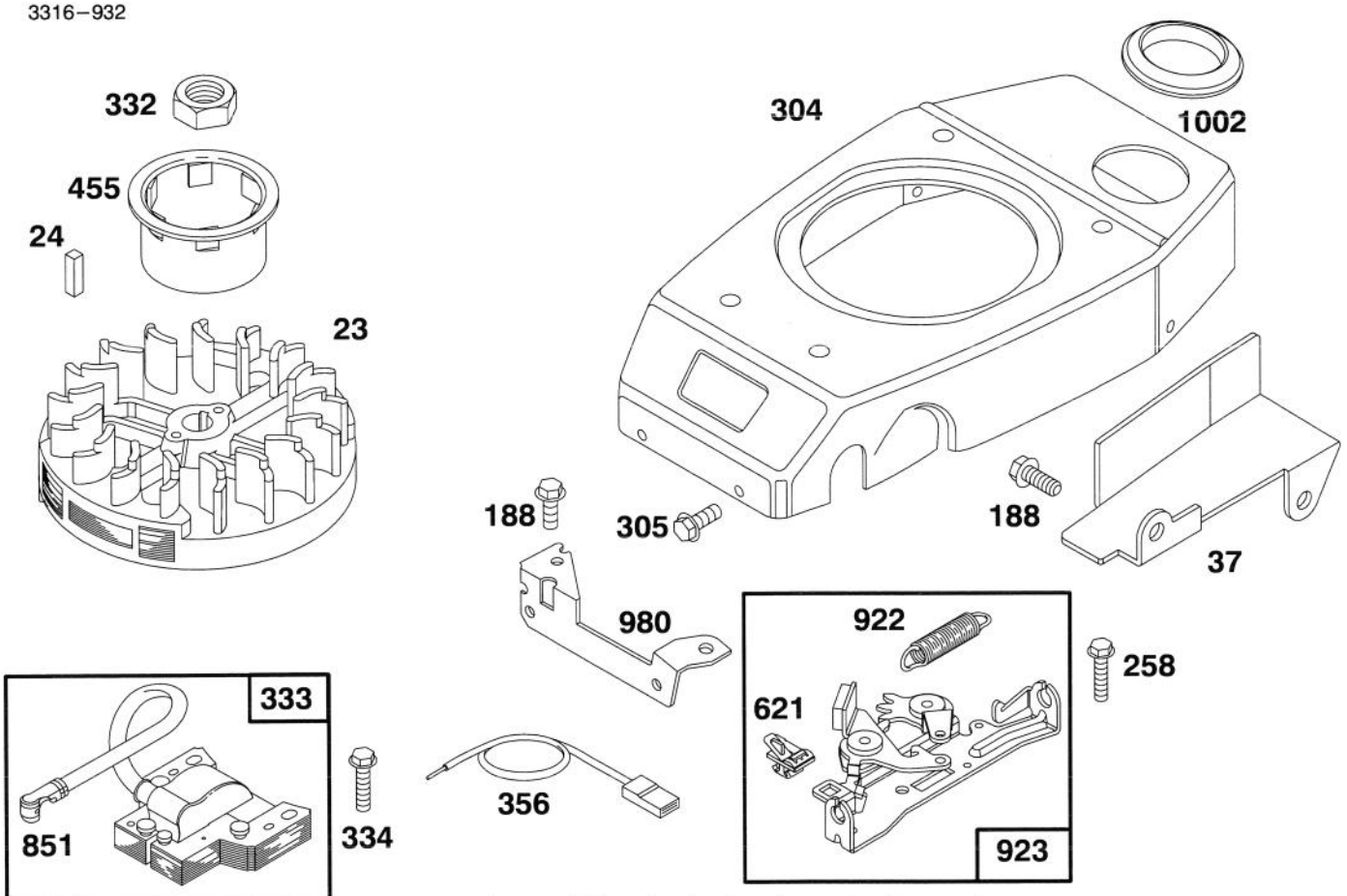

Assemblies include all parts shown in frames.

ENGINE GTS 150

Ref. No.	Part No.	Description	No. Used
23	77–8330	Flywheel – Magneto	1
24	77–8340	Key – Flywheel	1
37	77–7190	Guard – Flywheel	1
188	77–9360	Screw – Hex. Head	1
258	77–8870	Screw – Hex. Head	1
304	77–8260	Housing – Blower	1
305	77–8310	Screw – Hex. Head	1
332	77–8360	Nut – Flywheel	1
333	77–8420	Armature – Magneto	1

Ref. No.	Part No.	Description	No. Used
334	77–7420	Screw – Armature Mtg.	1
356	77–8400	Wire – Ground	1
455	77–8350	Cup – Starter	1
621	77–8010	Switch – Stop	1
851	77–8430	Terminal – Spark Plug	1
922	77–8860	Spring –Brake	1
923	77–9460	Brake Assy.	1
980	77–7140	Bracket – Blower Hsg.	1
1002	77–7180	Grommet	1

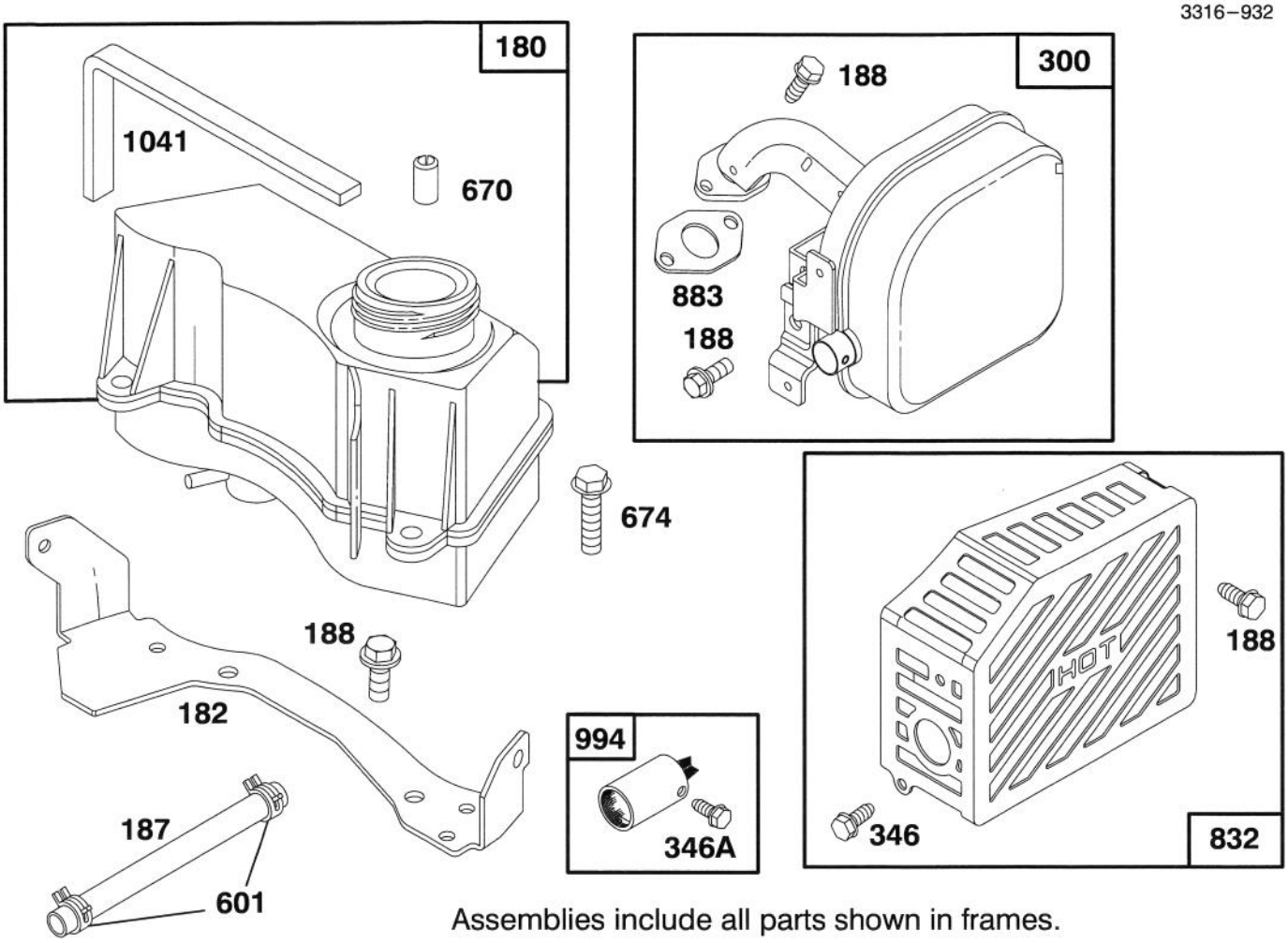

Assemblies include all parts shown in frames.

ENGINE GTS 150

Ref. No.	Part No.	Description	No. Used
180	77–8580	Tank Assy. – Fuel	1
182	77–7170	Bracket – Fuel Tank	1
187	77–8620	Hose – Fuel (Cut To Suit)	1
188	77–9360	Screw – Hex. Head	1
300	77–8640	Muffler – Exhaust	1
346	77–9430	Screw – Hex.	1
346A	77–9050	Screw – Arrester Mtg.	1

Ref. No.	Part No.	Description	No. Used
601	77–8630	Clamp – Fuel Hose	1
670	77–9030	Spacer – Fuel Tank (Includes 2)	1
674	77–8600	Screw – Tank Mtg.	1
832	77–8660	Guard – Muffler	1
★883	77–7760	Gasket – Exhaust	1
994	77–9040	Arrester – Spark	1
★1041	77–8590	Seal – Foam	1

★ Included in Gasket Set–Part No. 77–8900

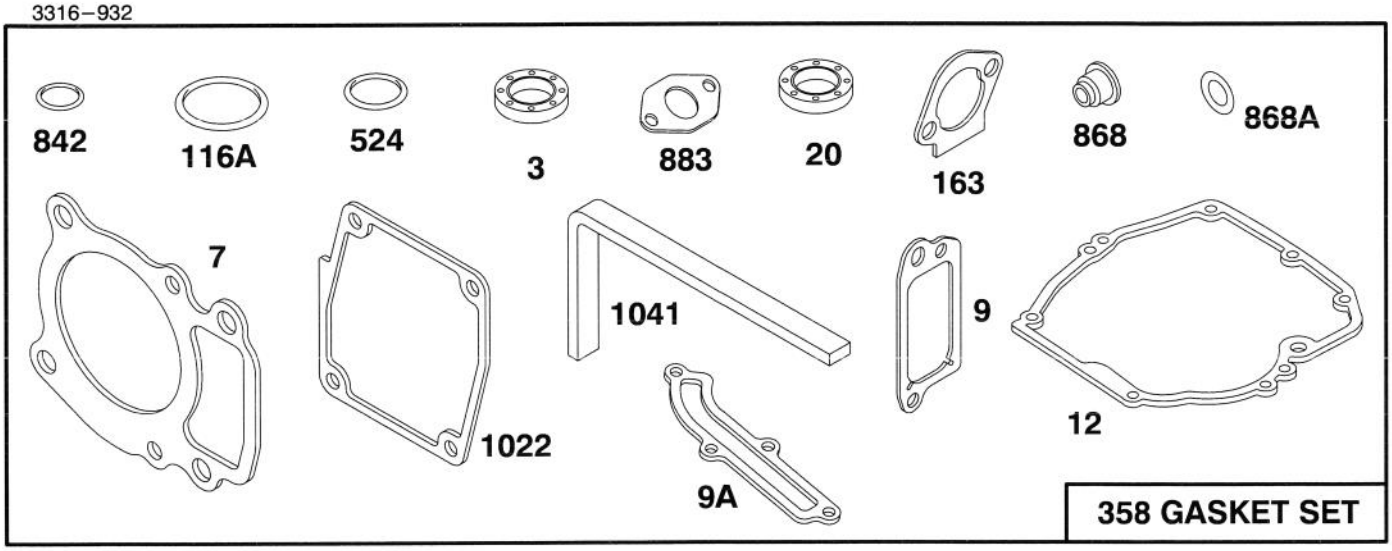

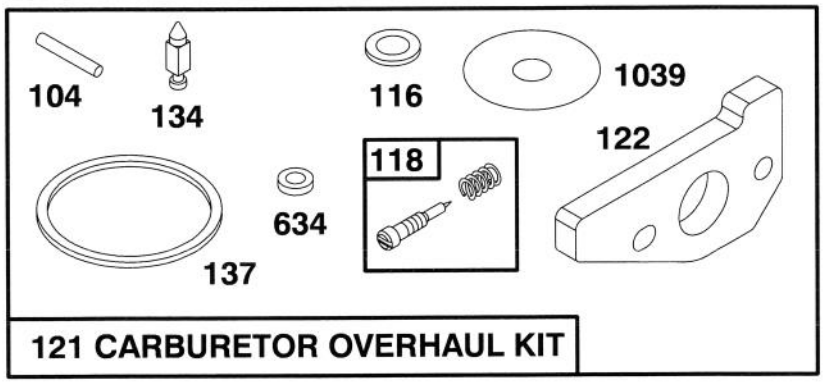

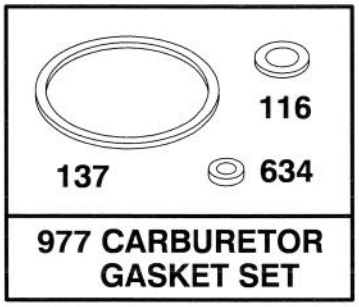

Assemblies include all parts shown in frames.

ENGINE GTS 150

Ref. No.	Part No.	Description	No. Used
★3	77–9060	Seal – Oil	1
★7	77–7740	Gasket – Cylinder Head	1
★9	77–9250	Gasket – Breather	1
★9A	77–7410	Gasket – Breather	1
★12	77–7500	Gasket – Engine Base	1
★20	77–7570	Seal – Oil	1
●104	77–8180	Pin – Float Hinge	1
●◆116	77–8210	Gasket – Sealing	1
★116A	77–7660	O-Ring	1
●118	77–8230	Valve and Spring – Needle	1
121	77–8920	Carburetor Overhaul Kit	1
●122	77–7820	Adapter Assembly	1
●134	77–8110	Valve – Inlet (Includes Seat)	1

Ref. No.	Part No.	Description	No. Used
●◆137	77–8200	Gasket – Float Bowl	1
★163	77–7960	Gasket – Air Cleaner	1
358	77–8900	Gasket Set	1
★524	77–7270	Seal – O-Ring	1
◆634	77–8150	Washer – Seal	1
★842	77–7300	Seal – O-Ring	1
★868	77–7890	Seal Assy. – Valve	1
★868A	77–7900	Seal – Valve	1
★883	77–7760	Gasket – Exhaust	1
977	77–8930	Carburetor Gasket Set	1
★1022	77–7320	Gasket – Rocker Cover	1
●1039	77–8040	Limiter – Float	1
★1041	77–8590	Seal – Foam	1

● Incl. in Carburetor Overhaul Kit–Part No. 77–8920
◆ Included in Carburetor Gasket Set–Part No. 77–8930

★ Included in Gasket Set–Part No. 77–8900

TORO PART NUMBER INDEX

Part No.	Description	Pg. No.	Ref. No.	Qty.
14–9949	Wheel & Tire Assembly	1	20	2
14–9959	Wheel Tire & Gear Assy.	4	31	2
16–1769	Housing – 53cm	1	4	1
16–8239	Control Panel Assembly	6	9	1
17–9426	Screw – Handle	7	1	2
19–4050	Knob – Handle Release	6	10	2
25–7740	Knob – Arm	4	3	2
25–7740	Knob – Arm	1	28	2
26–0670	Bolt – Blade	3	8	1
27–6231	Bolt – Wheel	1	22	2
27–6231	Bolt – Wheel	4	33	2
27–6250	Bushing – Wheel	1	21	2
27–6250	Bushing – Wheel	4	32	4
29–9570	Bushing – Yoke	4	38	1
36–4780	Washer – Thrust	4	44	1
36–4791	Washer – Thrust	5	48	2
38–7820	Bearing – Ball	5	60	1
40–1940	Washer – Wheel Bolt	1	23	4
46–5520	Lever – Traction	7	7	1
46–6432	Screw – Handle	7	9	1
46–6435	Screw – Handle	7	14	1
46–8081	Guide – Rope	7	13	1
48–2060	Bearing –Needle	4	21	2
49–2040	Screw – Self Tapping	4	8	8
52–7430	Control Bar Assembly	7	3	1
55–3570	Gas Cap Assembly	3	4	1
55–3760	Gear – Pinion 15T	5	49	1
55–3770	Gear – 49T (1st Gear)	5	58	1
55–3780	Gear – Pinion 20T	5	50	1
55–3790	Gear – 44T (2nd Gear)	5	57	1
55–3800	Gear – Pinion 25T	5	51	1
55–3810	Gear – 39T (3rd Gear)	5	56	1
60–8710	Case – Gear (Upper)	5	61	1
60–8730	Cover – Gear Case	5	46	1
60–8750	Bushing – Intrmdt. Shaft	5	47	2
60–8770	Bushing – Output Shaft	5	45	1
60–8790	Sleeve – Gear	5	55	1
60–8800	Shaft – Intermediate	5	52	1
60–8810	Retainer – Shift Fork	4	39	1
60–8840	Pulley – Half	4	10	2
60–8850	Bushing – Output Shaft	5	53	1
60–8870	Yoke – Shift	4	37	1
60–8890	Pinion – Bevel	5	59	1
62–6660	Spacer	4	9	1
62–6673	Gear Case Assy. Complete	5	*	1
62–7540	Retainer – Blade	3	7	1
62–7550	Pulley – Engine	3	13	1
62–7700	Blade – 21	3	10	1
65–2720	Ring – Retaining	4	24	4
65–4710	Ring – Friction	4	25	2
65–4720	Spring – Compression	4	29	2
65–4730	Washer – Thrust (Inner)	4	22	2
65–4740	Washer – Thrust (Keyed)	4	23	4
65–4750	Pinion	4	28	2
65–4760	Washer –Clutch	4	26	2
65–4770	Shaft – Output	4	17	1
65–5042	Pivot Arm Assembly	4	2	2
65–5190	Bracket – Belt Guide	4	7	1
65–5200	Cover	3	12	1
65–5210	Screw – Thread Forming	1	7	2
65–5220	Screw – Cap Socket Hd.	1	26	2
65–5220	Screw – Socket Hd. Cap	4	36	2
65–5250	Clip – Spring	4	43	1
65–5440	Spring Arm Assembly	4	4	2
65–5660	Panel – Screen	1	2	1
66–0020	Panel – Vertical	1	1	1
66–0030	Bracket – Cable Support	3	5	1
66–0210	V–Belt	4	13	1
66–0330	Support – Spacer	7	2	2
66–0360	Cap – End	4	5	2
66–0540	Arm – Spring Front	1	25	2
66–0560	Screw – Shoulder	1	19	2
66–0570	Guide – Belt	3	11	1
66–0580	Arm – Pivot	2	30	2
66–0620	Retainer – Belt	1	16	1
66–0680	Decal – French Regulation	1	13	1
66–5350	Lever – Control	7	5	1
66–6040	Key – Rocking (R.H.)	4	*	1
66–6050	Key – Rocking (L.H.)	4	27	1
70–9760	Bushing – Sleeve	4	19	2
71–0620	Cable – Traction	7	10	1
71–0960	Support – Cable	7	8	1
71–7900	Cap – Hinge Bolt L.H.	1	10	1
71–7910	Cap – Hinge Bolt R.H.	1	6	1
71–8090	Mount – Handle L.H.	6	12	1
71–8100	Mount – Handle R.H.	6	11	1
71–8580	Spacer – Door	1	12	2
71–9470	Door – Bag	8	3	1
71–9480	Handle – Door	8	2	1
71–9640	Ramp – Discharge	1	27	1
71–9650	Access – Cover	1	14	1
71–9680	Bag – Grass 53cm	8	5	1
71–9690	Handle	6	5	1
71–9800	Door – Discharge	1	9	1
71–9840	Spring – Door	1	11	2
71–9870	Decal – Deck 53cm	2	29	1
71–9873	Decal – Panel	6	7	1
71–9920	Cover – Top	1	15	1
71–9930	Frame – Grass Bag	8	4	1
74–1660	Cover – Wheel	4	30	2
74–1671	Spacer – Wheel Cover	4	34	2
76–0760	Key – Shift	4	41	2
76–0770	Collar – Shift	4	42	1
76–0780	Sleeve – Shift Key	4	40	1
76–0920	Lever – Shift	4	16	1
76–2713	Control – Ground Speed	6	1	1
76–2930	Retainer – Cable	4	15	1
77–7120	Cover – Brake	3	18	1
86–7990	Screw – Clamp	3	16	1
92–2289	Plate – TORO Logo	3	2	1
92–7857	Decal – Recoil	3	3	1
92–9077	Decal – Danger	1	5	1
93–0300	Decal – Instruction	6	3	1
93–1111	Control – Throttle	6	4	1
93–1112	Cable – Brake	7	15	1
2210–249	Clamp – Throttle	3	15	1
2210–316	Stop – Rope	3	17	1
237–153	Seal – ORing	4	18	2
302–56	Fitting – Grease	4	20	2
321–3	Screw – Cap Hex. Hd.	7	6	1
322–29	Screw – Hex Hd. Cap	1	8	2
3253–22	Washer – Blade	3	9	1
3256–22	Washer – Flat	7	11	1
3256–24	Washer – Flat	4	12	1
3256–24	Washer – Flat	1	17	1
3272–5	Pin – Cotter	4	14	1
3290–378	Tie – Cable	6	6	5
3296–5	Nut – Lock	4	11	1

*Not Illustrated

TORO PART NUMBER INDEX (Cont.)

Part No.	Description	Pg. No.	Ref. No.	Qty.
3296–6	Nut – Lock	1	24	4
3296–6	Nut – Lock	4	35	2
3296–42	Nut – Lock	7	4	3
3296–58	Nut – Lock	7	12	2
32104–76	Screw – Self Tapping	6	8	5
32121–120	Pin – Coil	5	54	1
32144–15	Screw – Hex Flange Hd.	1	18	1
32144–70	Screw – Cap Hex. Hd.	1	3	6
32144–70	Screw – Hex Hd. Cap	3	6	7
32144–70	Screw – Hex. Washer Hd.	4	1	5
32144–102	Screw – Thread Forming	3	14	3
32144–111	Screw – Index Hex Washer	8	1	5

*Not Illustrated

PRODUCT CHANGES

In an effort to make improvements available to TORO owners as quickly as possible, minor changes are incorporated into Toro's products from time to time that do not become immediately shown in the Parts Catalog. If such a change has been made in your unit, which is not reflected in your manual, see your TORO Distributor or his Authorized TORO Service Dealer for information and part numbers.

COUNTRIES OTHER THAN THE UNITED STATES OR CANADA

Customers who have purchased TORO products exported from the United States or Canada should contact their Toro Distributor (Dealer) to obtain guarantee policies for your country, province or state. If for any reason you are dissatisfied with your Distributor's service or have difficulty obtaining guarantee information, contact the TORO importer. If all other remedies fail, you may contact us at The Toro Company.

MAINTENANCE RECORD

Date								

Compliance with Radio Interference Regulations Certified.
Certifie Conforme au Reglement sur le Brouillage Radioelectrique.

Litho in U.S.A.

MAINTENANCE RECORD

Date								