FORM NO. 3316-934 Rev. A

TORO

MODEL NO. 07215–50001 & UP

PARTS CATALOG

WORKMAN 4300D

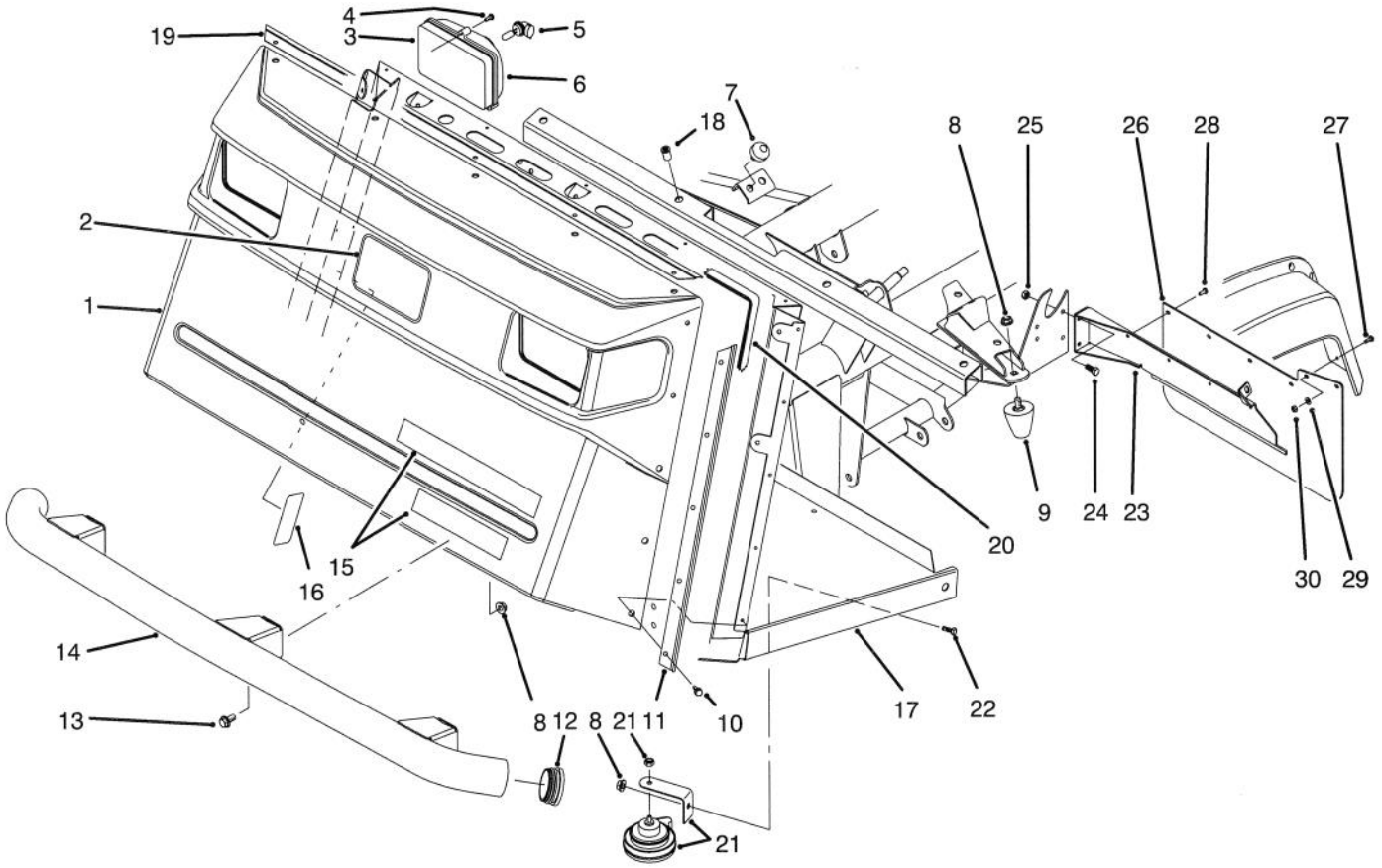

T–1581

FRONT BUMPER & HOOD ASSEMBLY

Ref. No.	Part No.	Description	No. Used
1	87–0710	Hood	1
2	62–5550	Decal – TORO	1
3	87–2120	Headlight Assembly (Incl. Ref. #5–6)	2
4	32104–88	Screw	6
5	87–6320	Bulb – Headlight	2
6	87–6330	Lens – Headlight	2
7	87–2440	Bumper	2
8	3290–357	Nut – Flange Lock	9
9	26–0071	Bumper	2
10	87–6620	Screw	15
11	87–8120	Bracket – Trim Side	2
12	2410–42	Cap – Front Bumper	2
13	3234–1	Screw – Hex. Flange Hd.	6
14	87–4070	Bumper – Front	1
15	87–9130	Decal – Workman 4300	1
‡16	93–7141	Decal – Load Rating (US)	1
‡*	94–1225	Decal – Load Rating (CE)	1

Ref. No.	Part No.	Description	No. Used
17	93–7114	Operators Platform Assy. (Incl. Ref. #18)	1
18	32148–7	Nut – Clinch	8
19	87–8130	Bracket – Trim Top	1
20	87–8160	Trim	1
21	116749	Horn Assembly	1
22	323–4	Screw – Cap Hex. Hd.	1
23	87–9330	Bracket – Mudflap LH	1
*	87–9340	Bracket – Mudflap RH	1
24	321–4	Screw – Cap Hex. Hd.	4
25	32128–33	Nut – Lock	4
26	87–9320	Mudflap	2
27	3250–13	Screw – Pan Hd.	4
28	146489	Rivet – Pop	8
29	3256–61	Washer – Flat	4
30	3296–2	Nut – Lock	4

‡For different language versions of this part, see International Decal Cross Reference.

*Not Illustrated

TPS

© The TORO Company – 1994

3316–934

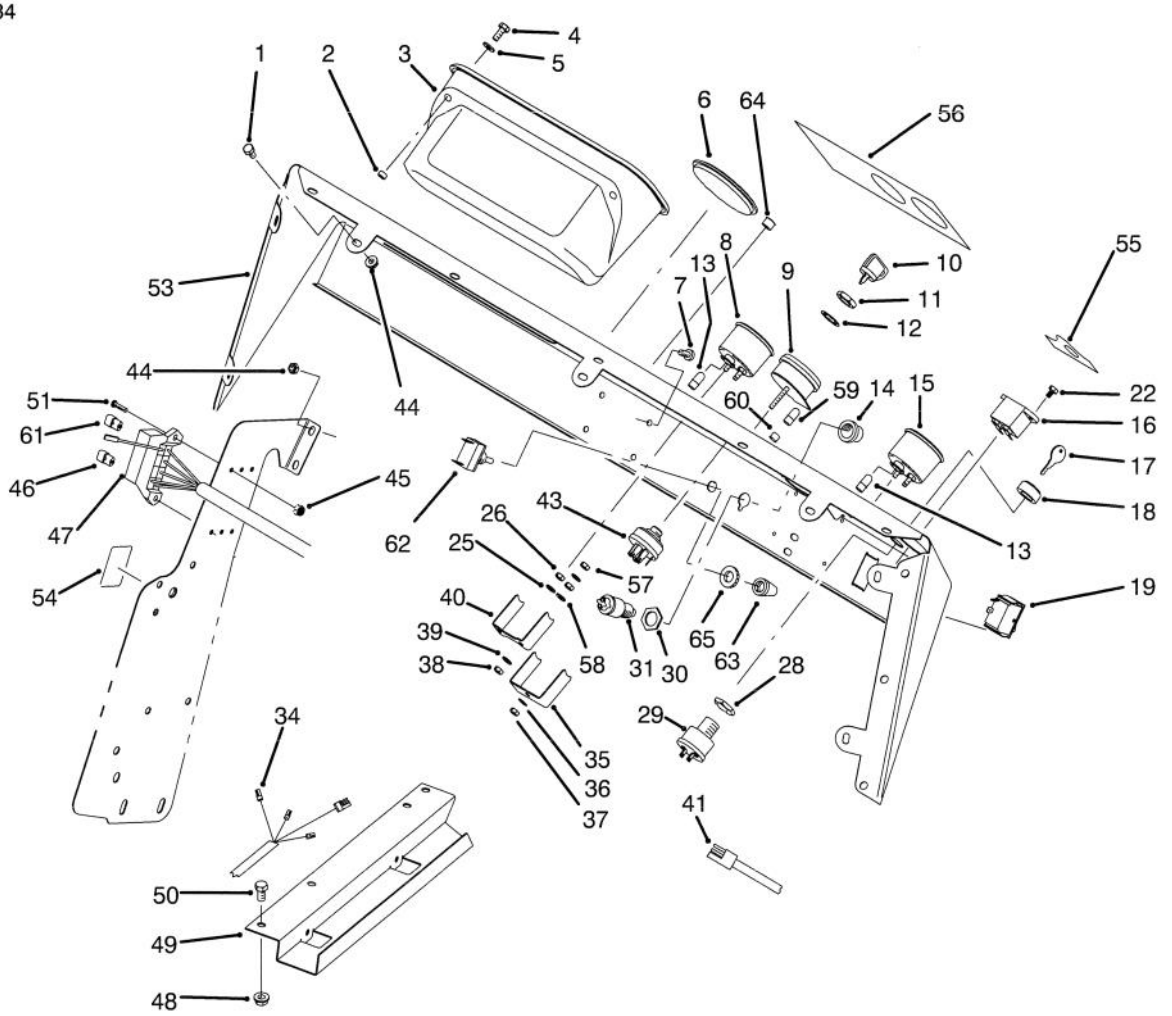

T–1706

CONTROL PANEL ASSEMBLY

Ref. No.	Part No.	Description	No. Used
1	321–2	Screw – Cap Hex. Hd.	7
2	32148–6	Insert – Threaded	2
3	87–3780	Box – Glove	1
4	321–3	Screw – Cap Hex. Hd.	2
5	3256–22	Washer – Flat	2
6	2410–35	Plug – Hole	1
7	3274–31	Screw – Button Hd.	4
8	87–5590	Temperature Gauge Assy. (Incl. Ref. #38–40, 57 & 58)	1
9	93–7053	Warning Light Assembly (Incl. Ref. #35–37, 59 & 60)	1
10	63–8360	Key – Ignition	1
11	218–446	Nut – Hex.	1
12	218–447	Washer – Lock	1
13	218–600	Bulb	2
14		Button – Horn	1
15	87–5580	Fuel Gauge Assembly (Incl. Ref. #38–40, 57 & 58)	1
16	75–6820	Hourmeter	1
17	87–0740	Key – Supervisor Switch	1
18	87–1720	Nut – Supervisor Switch	1
19	87–3790	Switch – Light	1
22	32144–18	Screw – Cap Hex. Hd.	2
28		Nut – Hex.	1
29	87–4030	Supervisor Switch Assembly (Incl. Ref. #17, 18 & 28)	1

Ref. No.	Part No.	Description	No. Used
30		Nut – Hex.	1
31	18–2830	Horn Switch Assembly (Incl. Ref. #14 & 30)	1
32	2412–89	Clamp – R	1
33	321–4	Screw – Cap Hex. Hd.	1
34	93–7130	Harness – Wire Rear	1
35		Clamp – Light	1
36	3254–1	Washer – Lock	1
37	3217–26	Hut – Hex.	1
38	3217–25	Nut – Hex.	2
39	3253–15	Washer – Lock	2
40		Clamp – Temp. Gauge	1
41	87–4230	Harness – Wire Front LH	1
43	27–2360	Ignition Switch Assembly (Incl. Ref. #11 & 12)	1
44	32128–33	Nut – Flange	11
45	3296–2	Nut – Lock	2
46	218–574	Fuse – 7.5 Amp	2
47	87–8500	Front Wire Harness Assy. (Incl. Ref. #13)	1
48	32128–20	Nut – Flange	3
49	93–7094	Cover – Wire Harness	1
50	322–2	Screw – Cap Hex. Hd.	3
51	3250–13	Screw	2
53	87–8550	Control Panel Assembly (Incl. Ref. #55–56)	1

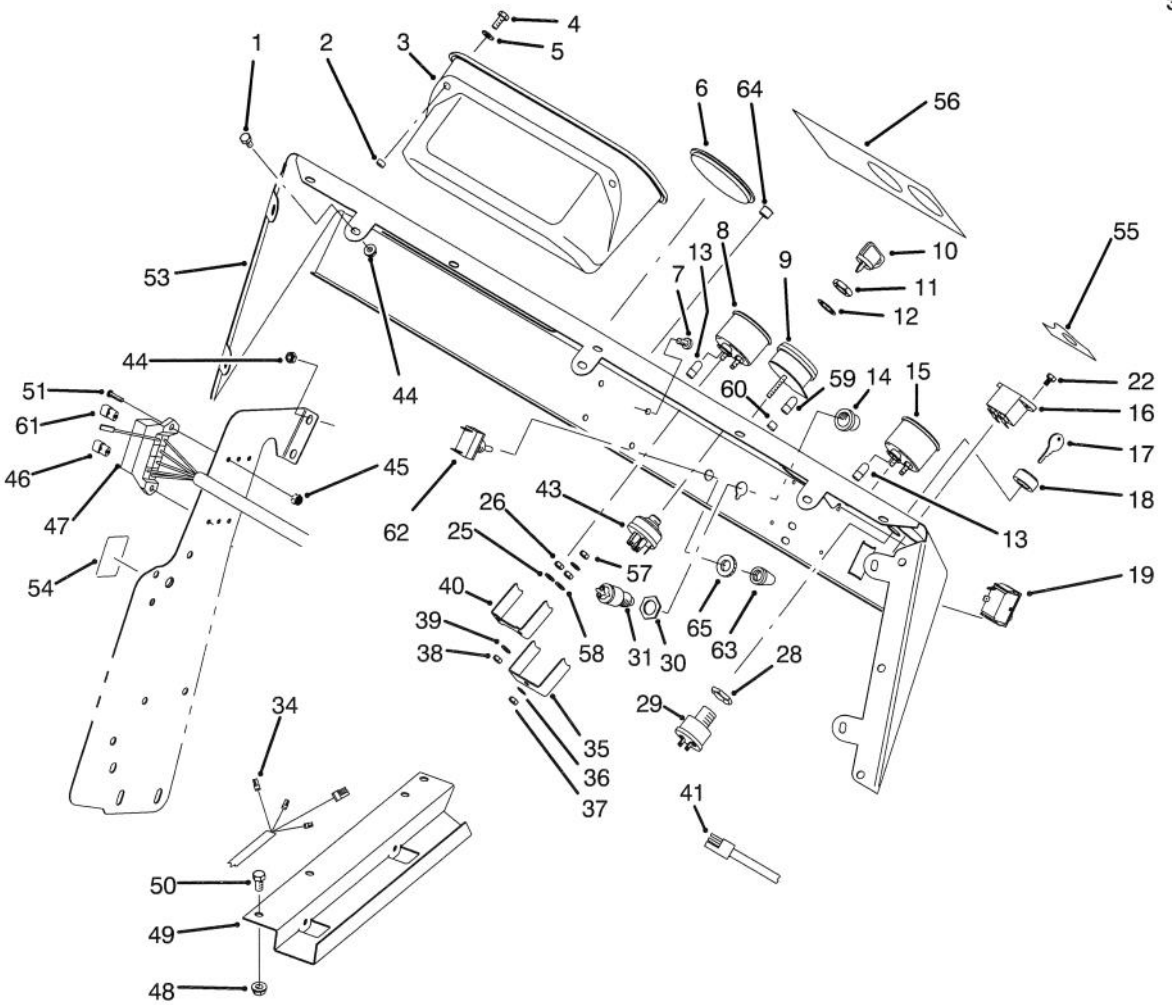

T–1706

CONTROL PANEL ASSEMBLY (Continued)

Ref. No.	Part No.	Description	No. Used
‡54	87–6670	Decal – Fuse Block (US)	1
‡*	93–9851	Decal – Fuse Block (CE)	1
‡55	87–5910	Decal – Supervisor (US)	1
‡*	93–9856	Decal – Supervisor (CE)	1
‡56	87–9890	Decal – Dash (US)	1
‡*	92–1211	Decal – Dash (CE)	1
57	3253–19	Washer – Lock	3
58	3217–29	Nut – Jam	3
59	219–17	Bulb – Warning Light	4

Ref. No.	Part No.	Description	No. Used
60	87–6270	Socket & Bulb Assembly (Incl. Ref. #59)	4
61	218–578	Fuse – 10 Amp	1
62	20–7150	Toggle Switch Assembly (Incl. Ref. #65)	1
63	218–473	Boot – Switch	1
64	2410–64	Plug – Hole	1
65		Nut – Locking	1

‡For different language versions of this part, see International Decal Cross Reference.

ELECTRICAL SCHEMATIC

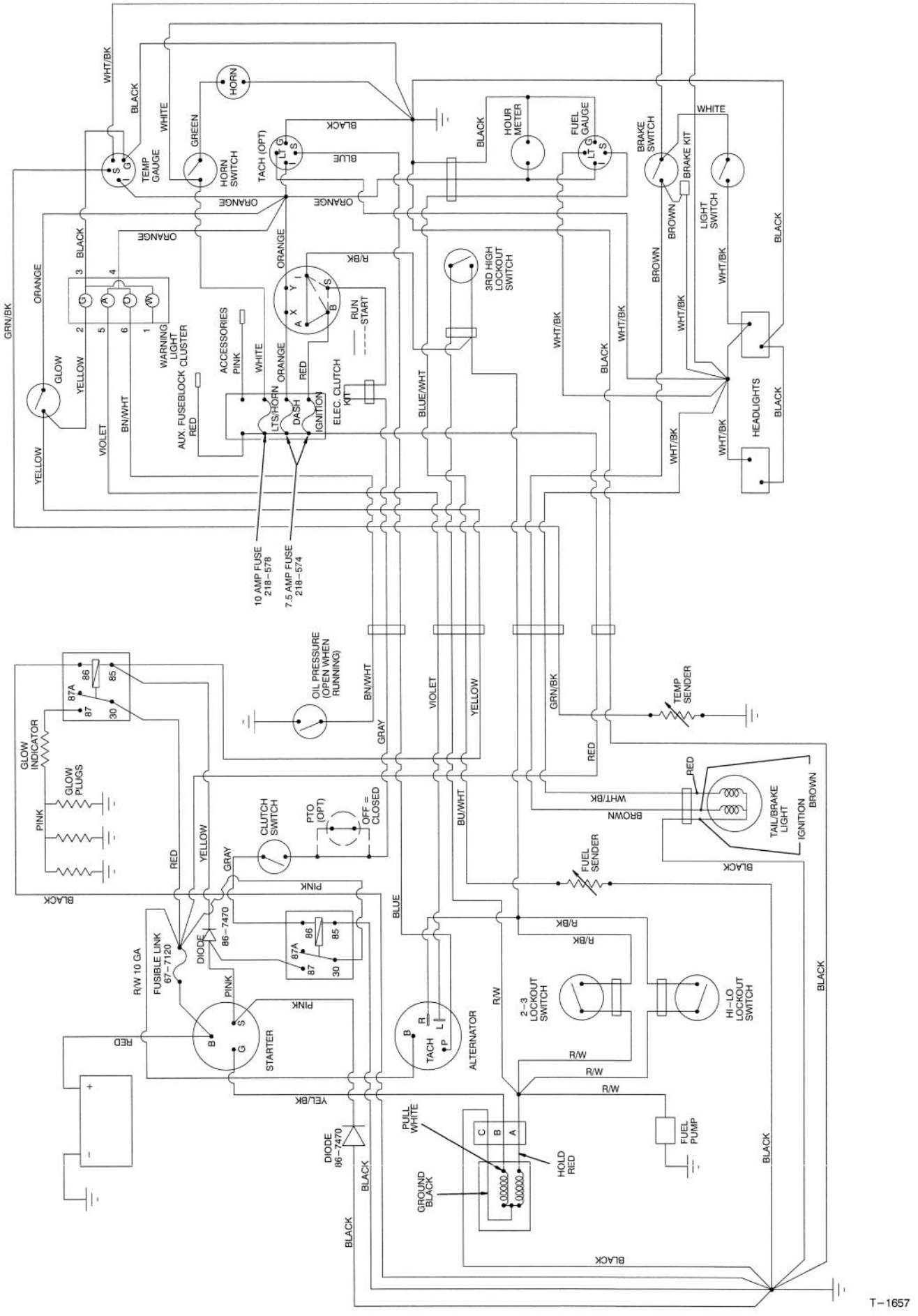

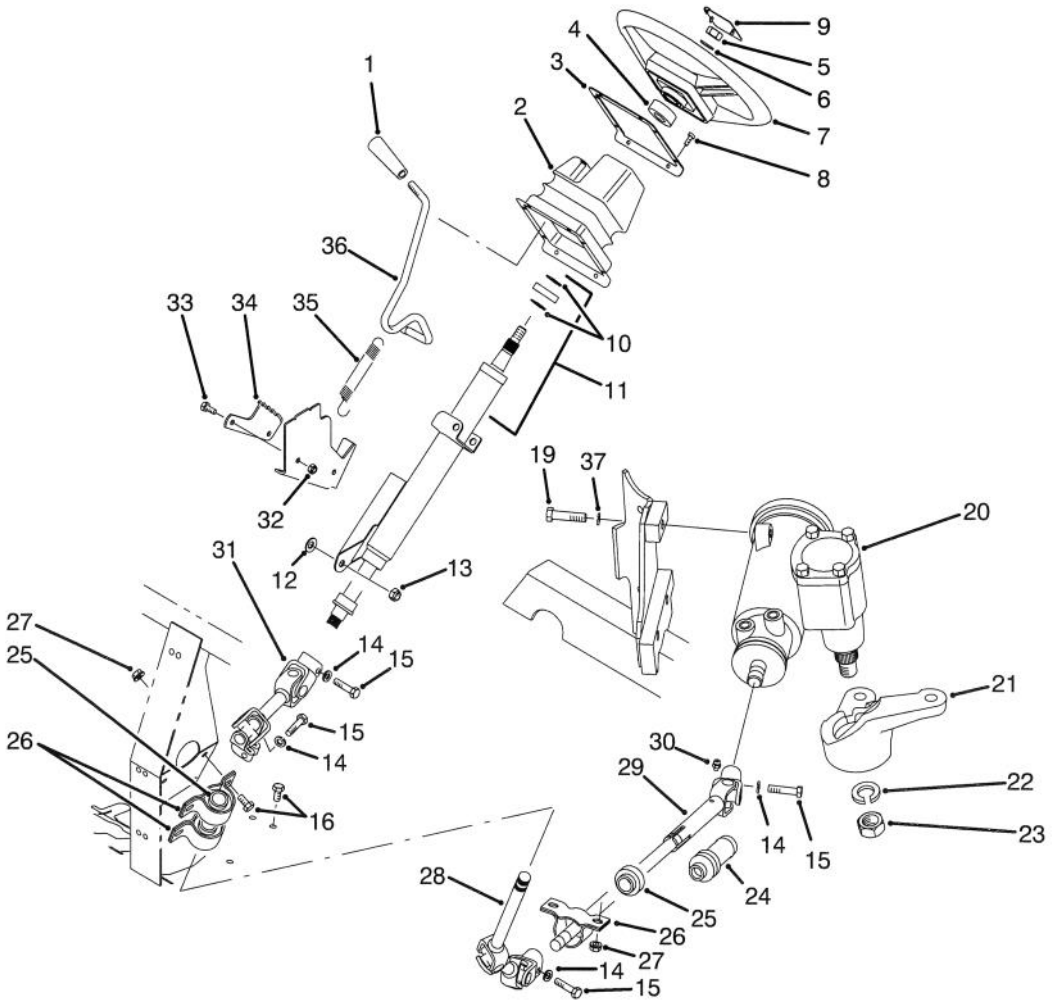

T–2007

STEERING LINKAGE ASSEMBLY

Ref. No.	Part No.	Description	No. Used
1	233–39	Knob	1
2	87–3460	Boot – Tilt Steering	1
3	87–4720	Plate – Steering Boot	1
4	21–9260	Spacer	1
5	3277–1	Nut – Hex.	1
6	48–8070	Washer – Flat	1
7	87–3820	Wheel – Steering	1
8	32144–116	Screw – Pan Head	8
9	87–3750	Cover – Steering Wheel	1
10	43–6550	Ring – Retaining	2
11	92–4153	Assembly –Steering Column (Incl. Ref. #10)	1
12	3290–455	Washer	1
13	3296–59	Nut – Lock	1
14	3253–4	Washer – Lock	4
15	48–7740	Screw – Cap Hex. Hd.	4
16	322–2	Screw – Cap Hex. Hd.	6
19	93–7145	Screw – Cap Hex. Hd.	3
20	87–1500	Steering Gear Assembly (Incl. Ref. #22 & 23)	1
21	87–9640	Arm – Pitman	1

Ref. No.	Part No.	Description	No. Used
22	39–7420	Washer – Lock	1
23	39–7440	Nut – Lock	1
24	93–8988	Boot – Steering Shaft	1
25	87–2280	Bearing	3
26	87–3250	Mount – Bearing	3
27	32128–20	Nut – Flange	6
28	92–4155	Slip Joint Assembly – Upper	1
29	93–8987	Slip Joint Assembly – Lower (Incl. Ref. #24 & 30)	1
30	302–5	Fitting – Grease	1
31	92–4154	Universal Joint Assembly	1
32	3296–42	Nut – Lock	2
33	321–3	Screw – Cap Hex. Hd.	2
34	87–3610	Bracket – Detent	1
35	65–5360	Spring – Extension	1
36	87–3130	Lever – Tilt Steering	1
37	87–7480	Washer – Flat	3
*	87–9160	Lower Shaft Assembly (Incl. Ref. #24 & 28–30)	1
*	87–3120	Steering Column & Shaft (Incl. Ref. #10, 11 & 31)	1

*Not Illustrated

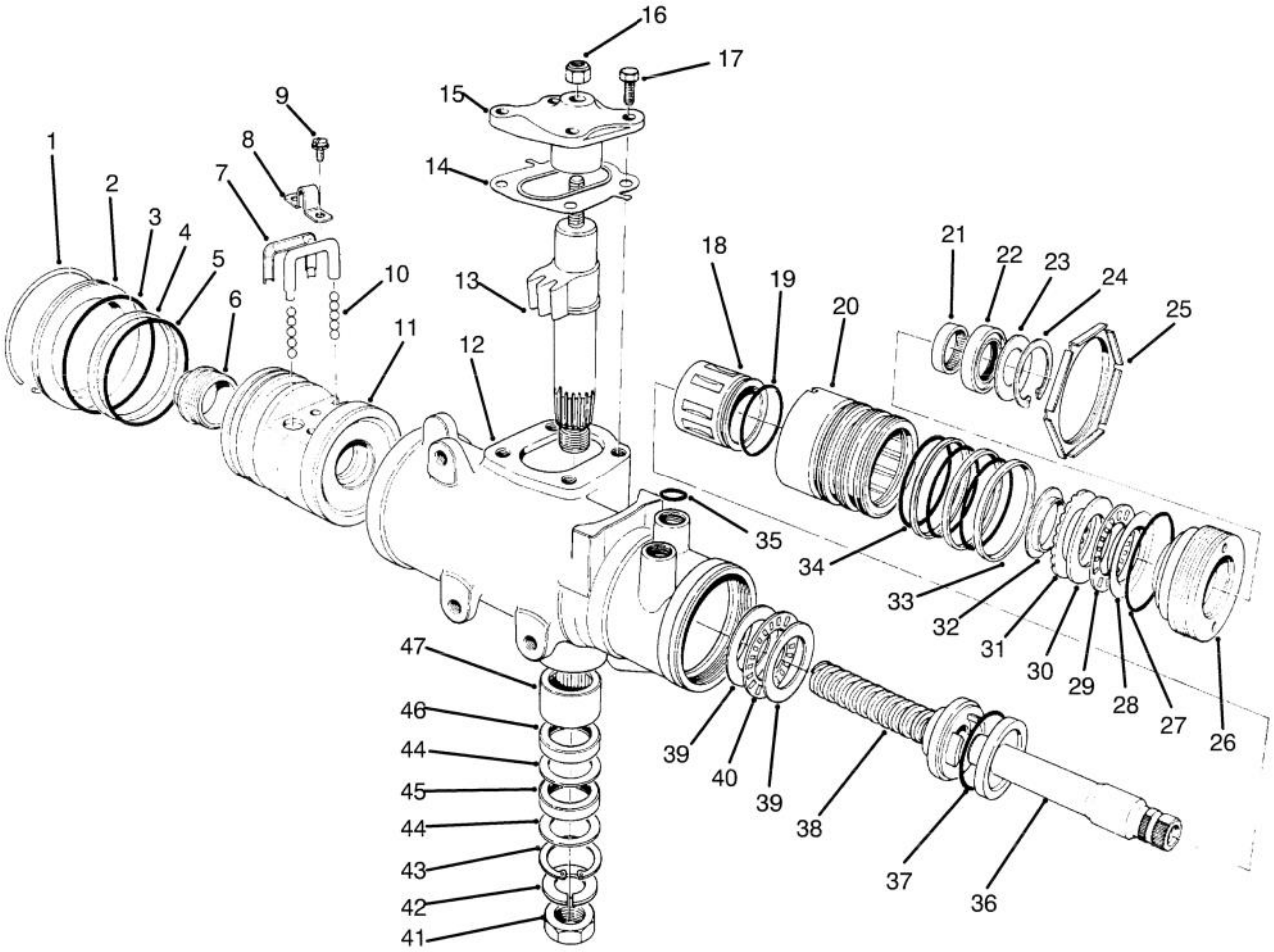

T–1580

STEERING GEAR ASSEMBLY NO. 87–1500

Ref. No.	Part No.	Description	No. Used
1		Ring – Retaining	1
2	92–4165	Plug – Housing End	1
3		Seal – Housing End Plug	1
4		Ring – Rack Piston	1
5		O–Ring, Rack Piston	1
6	18–4340	Plug – Rack Piston End	1
7	92–4168	Return – Guide Ball	2
8	18–4270	Clamp – Ball Return Guide	1
9	18–4260	Assy. – Screw/Lockwasher	2
10	18–5190	Ball – Chrome Alloy	11
11		Nut – Rack Piston	1
12		Housing – Steering Gear	1
13		Gear – Pitman Shaft	1
14	28–8280	Seal Kit – Side Cover (Incl. Ref. #17)	1
15		Cover – Housing Side	1
16	28–8220	Nut – Lash Adjuster	1
17	28–8210	Bolt – Flange Hex. Hd.	4
18		Spool Valve	1
19		O–Ring, Spool Valve	1
20		Valve Body	1
21	92–4169	Bearing – Needle	1
22		Seal – Stub Shaft	1
23		Seal – Stub Shaft Dust	1
24		Ring – Retaining	1
25	92–4159	Nut – Adjuster Plug Lock	1

Ref. No.	Part No.	Description	No. Used
26		Plug – Adjuster	1
27	28–8200	O–Ring	1
28		Race – Upper Bearing	1
29		Bearing – Roller, Thrust	1
30		Race – Thrust Bearing	1
31		Spacer – Thrust Bearing	1
32		Retainer – Bearing	1
33		Ring – Valve Body	3
34		O–Ring	3
35	39–7310	O–Ring	3
36		Shaft – Stub	1
37		O–Ring	1
38		Worm – Steering	1
39		Race – Thrust Bearing	2
40		Bearing – Roller, Thrust	1
41	39–7440	Nut – Pitman Arm	1
42	39–7420	Washer – Lock	1
43		Ring – Retaining	1
44		Washer – Seal, Backup	2
45		Seal – Pitman Shaft	1
46		Seal – Pitman Shaft	1
47	92–4170	Bearing – Pitman Shaft	1
*	92–4161	Assembly – Cover Service Housing Side (Incl. Ref. #14–17)	1

*Not Illustrated

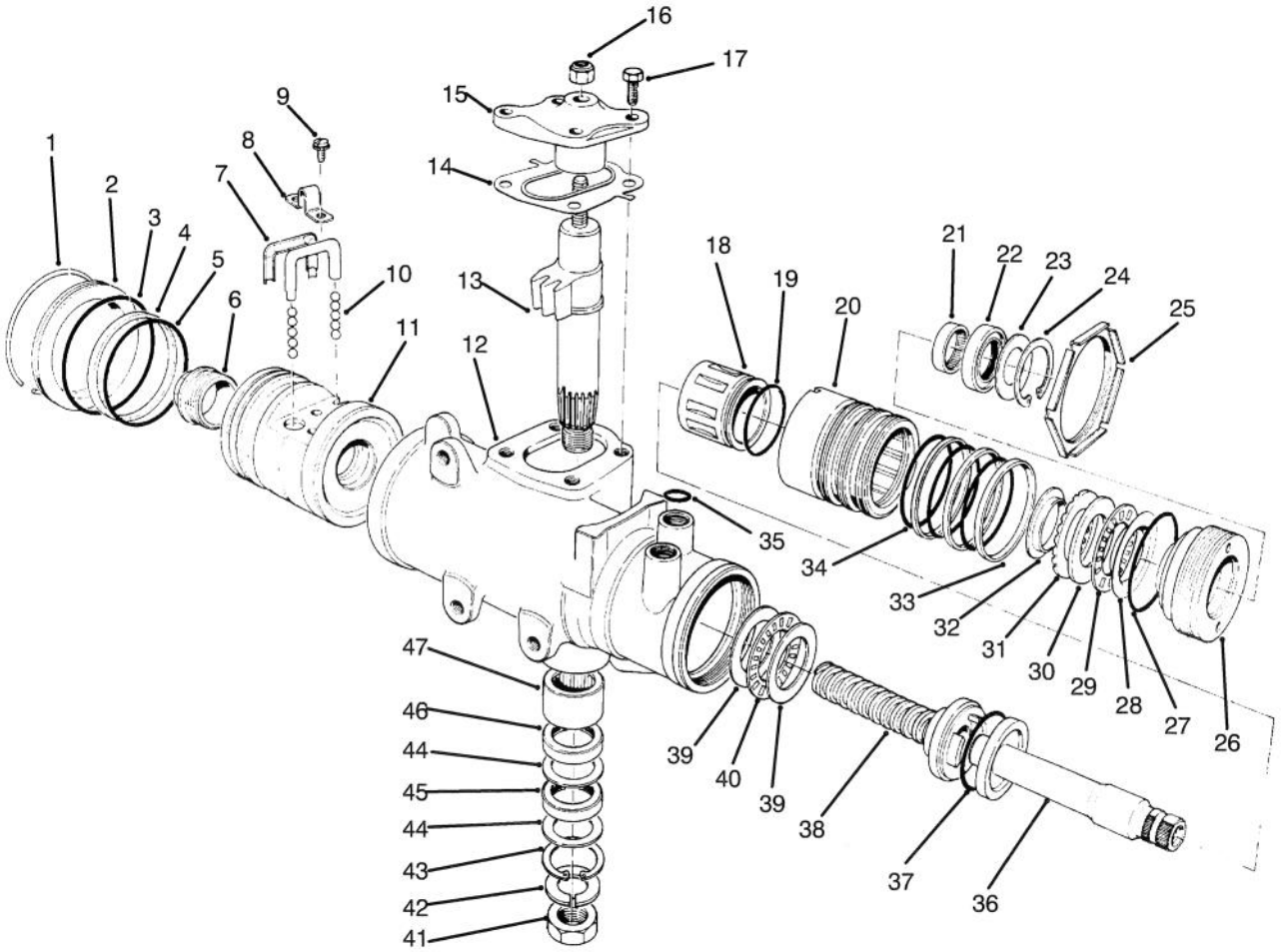

T–1580

STEERING GEAR ASSEMBLY NO. 87–1500

Ref. No.	Part No.	Description	No. Used
*	28–8270	Seal Service Kit – End Plug (Incl. Ref. #1 & 3)	1
*	28–8290	Seal Service Kit Rack/Piston (Incl. Ref. #4 & 5)	1
*	18–5180	Bearing Kit – Lower Thrust (Incl. Ref. #39–40)	1
*	18–5160	Seal Kit – Pitman Shaft (Incl. Ref. #43–46	1
*	18–5170	Seal Kit – Valve Ring (Incl. Ref. #19, 33, 34 & 37)	1
*	92–4163	Assy. – Steering Housing (Incl. Ref. #12 & 43–47)	1
*	92–4167	Assembly – Plug Service (Incl. Ref. #22–24 & 27)	1

Ref. No.	Part No.	Description	No. Used
*	92–4162	Pitman Shaft – Gear Service (Incl. Ref. #13–15 & 17)	1
*	92–4158	Valve Assy. – Hyd. Gear (Incl. Ref. #18–20, 33, 34, 36 & 37)	1
*	92–4160	Bearing Service Kit – Upper (Incl. Ref. #28–32)	1
*	92–4166	Rack/Piston/Nut Assembly (Incl. Ref. #1–11 & 38)	1
*	92–4164	Plug Assy. – Service Adjust. (Incl. Ref. #21–24 & 26–32)	1
*	87–1500	Steering Gear (Complete)	1

*Not Illustrated

3316–934

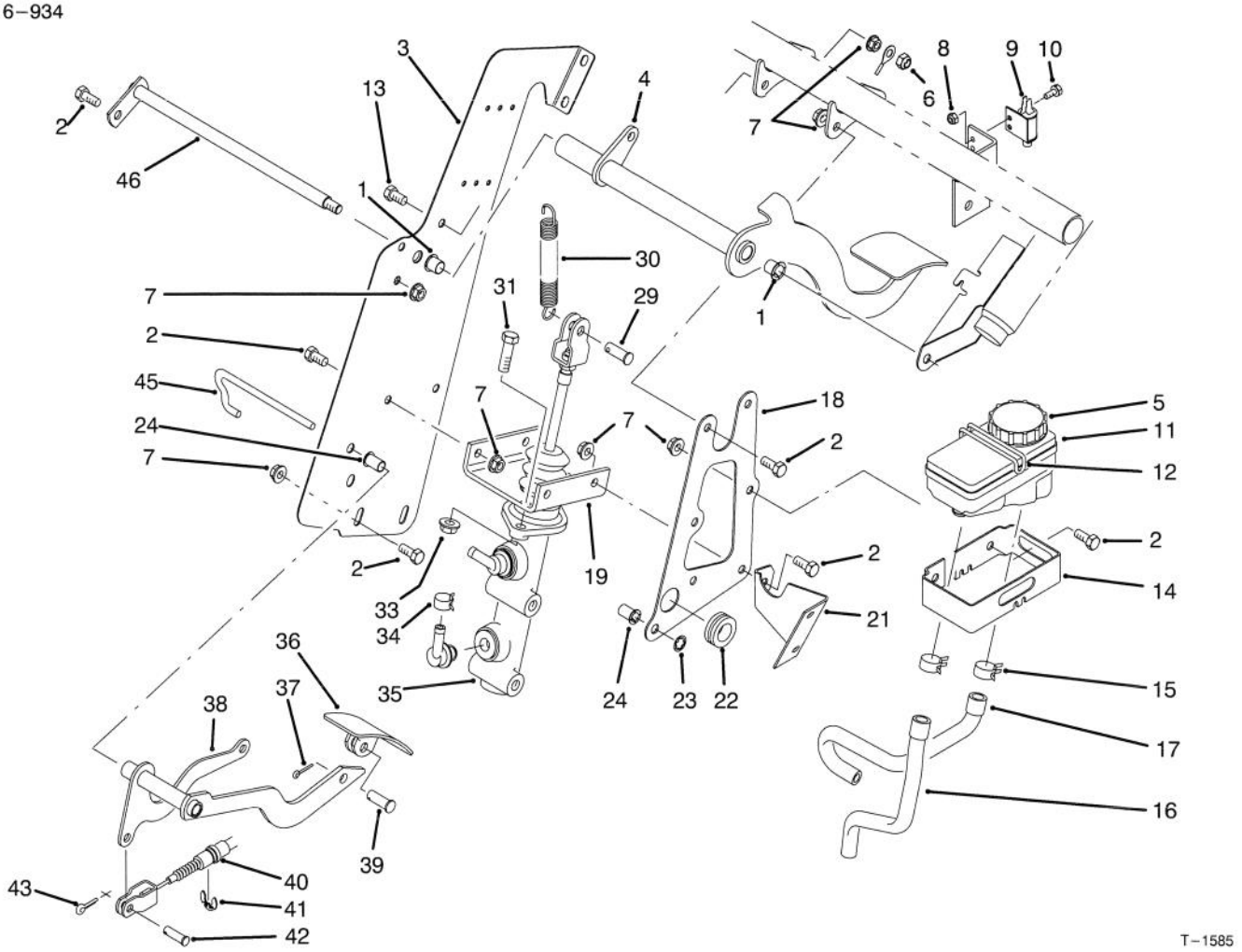

BRAKE & ACCELERATOR PEDAL ASSEMBLY

Ref. No.	Part No.	Description	No. Used
1	256–257	Bushing – Flange	2
2	322–2	Screw – Cap Hex. Hd.	12
3	87–2910	Support – Pedal RH	1
4	87–2540	Pedal – Brake	1
5	92–4112	Assembly – Cap	1
6	3296–29	Nut – Lock	1
7	32128–20	Nut – Flange Lock	13
8	3296–2	Nut – Lock	2
9	55–7120	Switch – Brake Light	1
10	3290–321	Screw – Hex. Flange Hd.	2
11	87–3040	Brake Fluid Reservoir Assy. (Incl. Ref. #5)	1
12	87–7570	Retainer – Reservoir	1
13	322–5	Screw – Cap Hex. Hd.	1
14	87–2890	Cradle – Reservoir	1
15	2412–143	Clamp – Hose	2
16	87–0670	Hose – Reservoir Front	1
17	87–0660	Hose – Reservoir Rear	1
18	87–2660	Support – Pedal LH	1
19	87–2640	Support – Master Cylinder	1

Ref. No.	Part No.	Description	No. Used
21	87–2650	Gusset	1
22	240–6	Grommet	1
23	32151–56	Ring – Push–On	1
24	52–2890	Bushing – Flange	2
29	283–2	Pin – Clevis	1
30	21–1830	Spring – Extension	1
31	323–7	Screw – Cap Hex. Hd.	2
33	3290–357	Nut – Flange Lock	2
34	2412–144	Clamp – Hose	2
35	87–3030	Master Cylinder Assembly	1
36	87–2670	Pedal – Accelerator	1
37	3272–6	Pin – Cotter	1
38	87–4790	Arm – Accelerator Pedal	1
39	283–85	Pin – Clevis	1
40	93–7097	Cable – Accelerator	1
41	32120–47	Ring – E	1
42	283–30	Pin – Clevis	1
43	3272–10	Pin – Cotter	1
45	87–2880	Shaft – Accelerator Pedal	1
46	87–2590	Shaft – Brake Pedal	1

3316–934

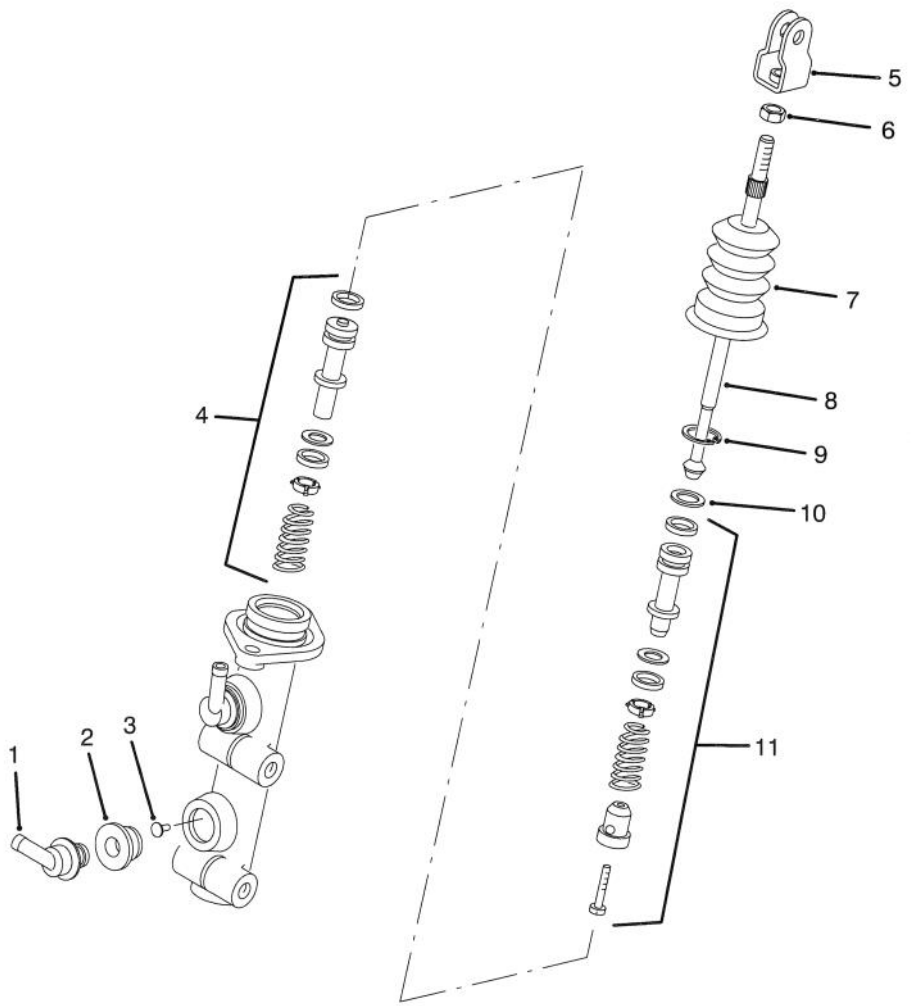

T–1586

MASTER BRAKE CYLINDER NO. 87–3030

Ref. No.	Part No.	Description	No. Used
1	92–4104	Adaptor – Pipe Fitting	2
2		Seal	2
3	92–4103	Pin – Stop	1
4	92–4102	Secondary Piston Assembly	1
5	92–4110	Clevis	1
6	21–0360	Nut	1

Ref. No.	Part No.	Description	No. Used
7	92–4107	Dust Cover	1
8	92–4106	Rod – Push	1
9	92–4109	Circlip	1
10	92–4108	Washer – Retainer	1
11	92–4101	Primary Piston Assembly	1

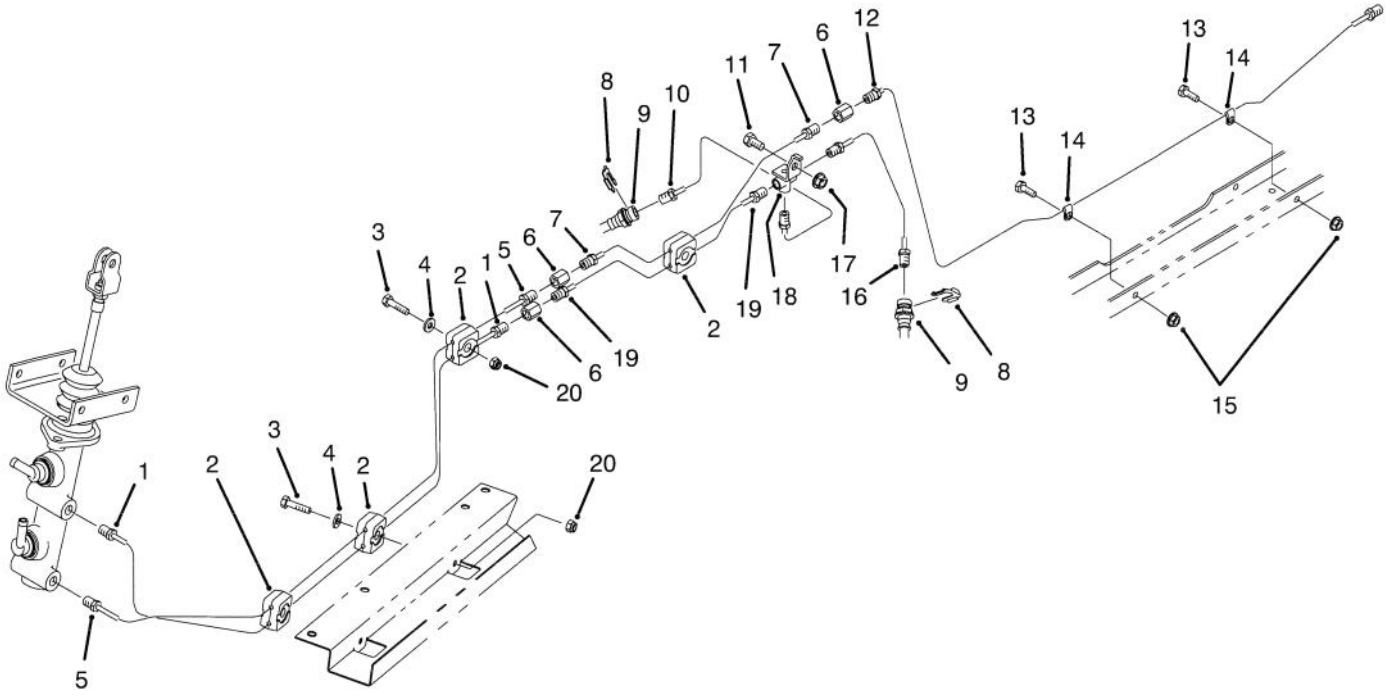

T–1990

HYDRAULIC BRAKE LINE ROUTING ASSEMBLY

Ref. No.	Part No.	Description	No. Used
1	93–7083	Tube – Brake Front	1
2	87–7660	Clamp – Brake Line	8
3	321–9	Screw – Cap Hex. Hd.	4
4	3256–22	Washer – Flat	5
5	93–7084	Tube – Brake Rear	1
6	87–3570	Fitting – Union	2
7	93–7086	Tube – Brake Rear	1
8	87–3580	Retainer – Brake Hose	2
9	93–7059	Hose – Brake Front	2
10	93–7081	Tube – Brake Front RH	1

Ref. No.	Part No.	Description	No. Used
11	322–2	Screw – Cap Hex. Hd.	1
12	93–7087	Tube – Brake Rear	1
13	321–4	Screw – Cap Hex. Hd.	2
14	2412–149	R–Clamp	2
15	32128–33	Nut – Flange Head	2
16	93–7082	Tube – Brake Front LH	1
17	32128–20	Nut – Flange	1
18	87–3560	Tee – Brake Line	1
19	93–7085	Tube – Brake Front	1
20	3296–42	Nut – Lock	4

HYDRAULIC SCHEMATIC

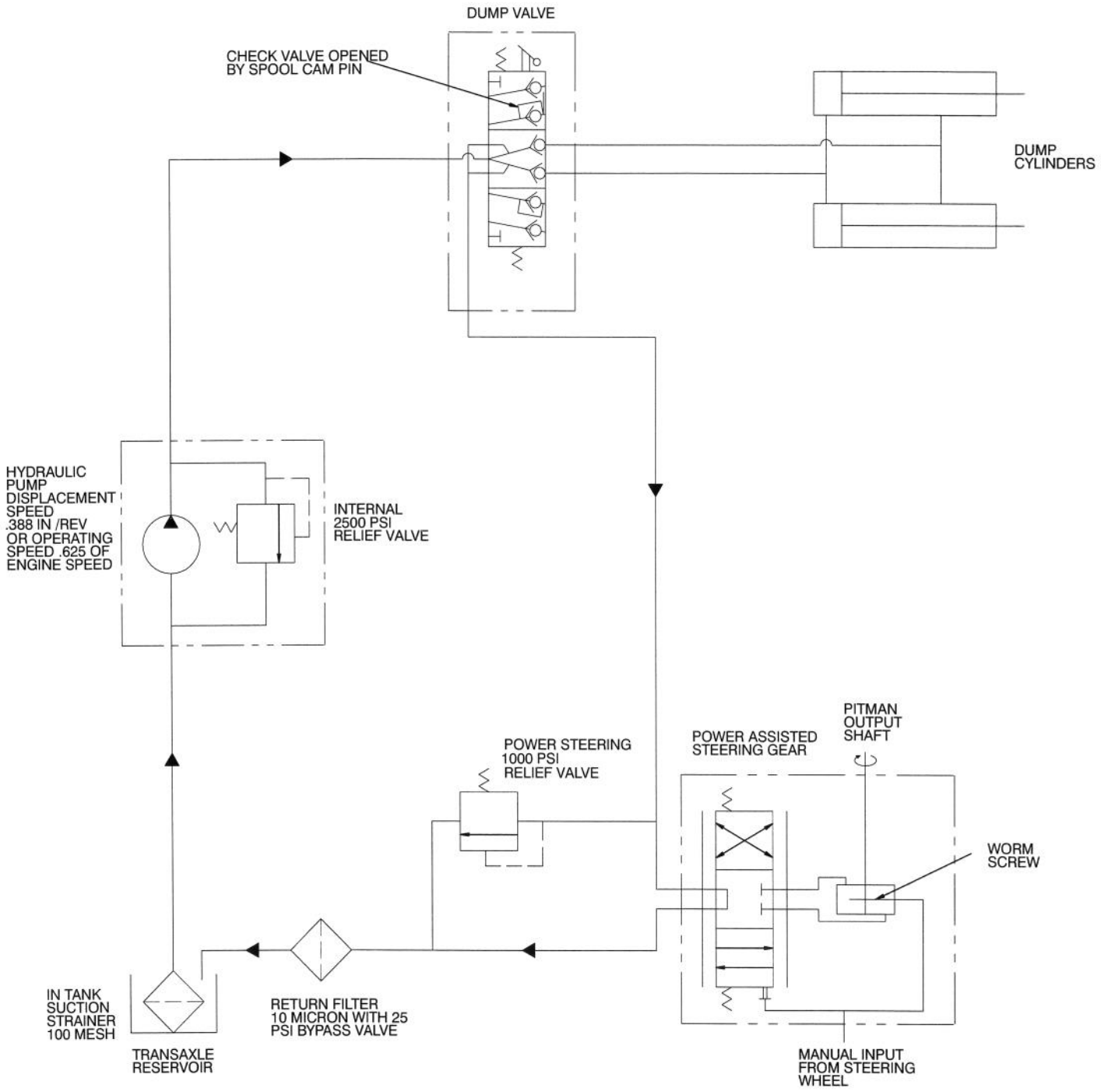

T–1626

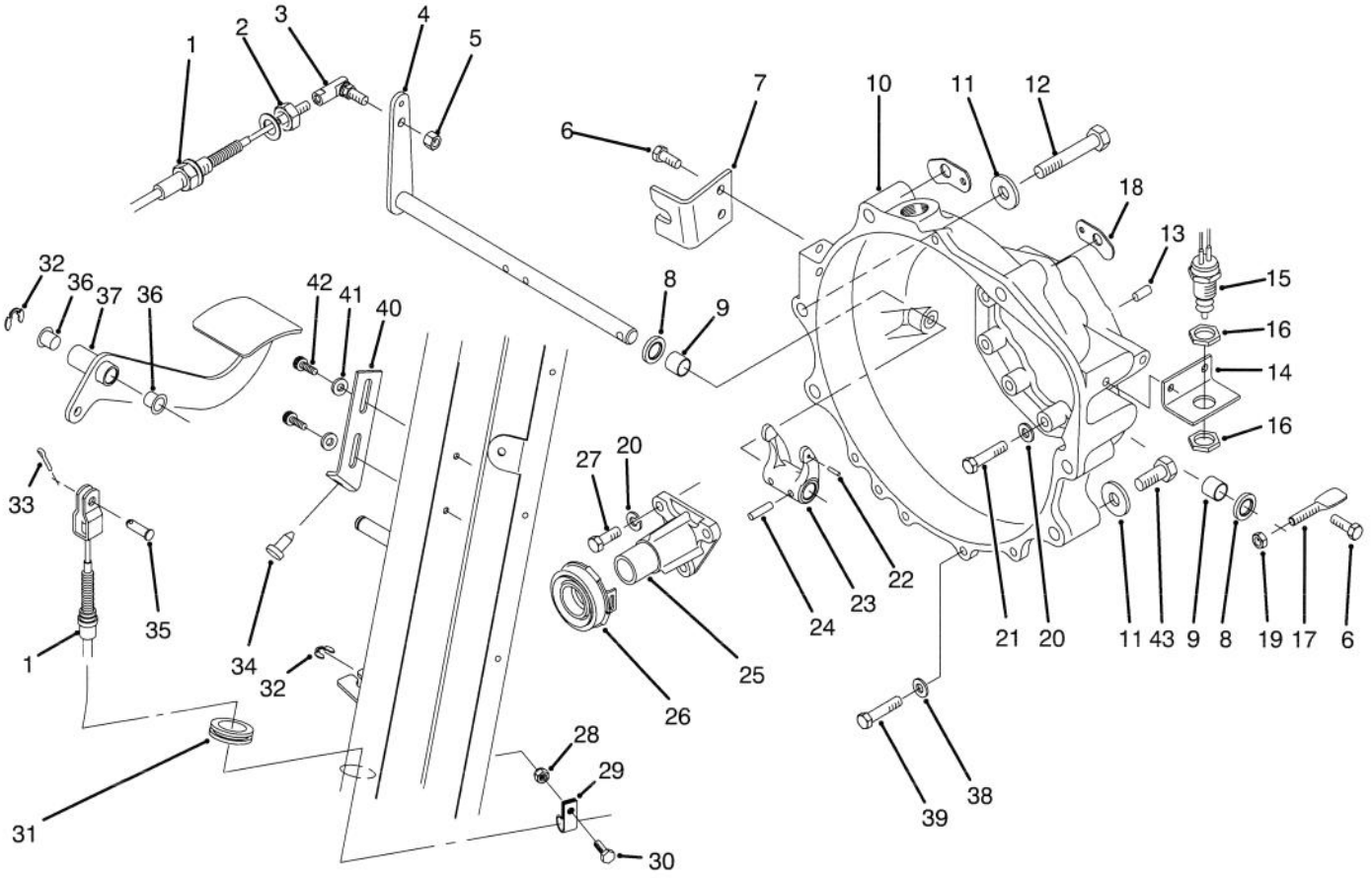

T–1658

CLUTCH LINKAGE ASSEMBLY

Ref. No.	Part No.	Description	No. Used
1	93–7091	Clutch Cable Assembly (Incl. Ref. #2)	1
2	3220–2	Nut – Jam	1
3	2411–33	Joint – Ball	1
4	87–5280	Shaft – Release	1
5	3296–4	Nut – Lock	1
6	66–3160	Screw – Cap Hex. Hd.	4
7	87–8471	Bracket – Clutch	1
8	87–1920	Seal – Shaft	2
9	87–3770	Bushing – Sleeve	2
10	93–7120	Housing – Bell	1
11	3256–5	Washer – Flat	4
12	3215–2	Screw – Cap Hex. Hd.	5
13	87–1910	Pin – Alignment	2
14	87–5350	Bracket – Switch	1
15	87–5490	Switch – Neutral	1
16	3218–20	Nut – Jam	2
17	87–5360	Lever	1
18	87–6410	Bracket – Harness	2
19	3296–29	Nut – Lock	1
20	42–9850	Washer – Lock	12
21	42–9530	Screw – Cap Hex. Hd.	9

Ref. No.	Part No.	Description	No. Used
22	32121–7	Pin – Roll	1
23	87–5300	Fork – Clutch	1
24	32121–24	Pin – Roll	2
25	87–5320	Guide – Release	1
26	87–2100	Bearing – Release	1
27	57–6380	Screw – Cap Hex. Hd.	3
28	32128–33	Nut – Flange Lock	1
29	2412–89	Clamp – R	1
30	321–4	Screw – Cap Hex. Hd.	1
31	240–5	Grommet	1
32	32120–47	Ring – E	2
33	3272–10	Pin – Cotter	1
34	87–8460	Bumper	1
35	283–30	Pin – Clevis	1
36	256–257	Bushing – Flange	2
37	87–2610	Pedal – Clutch	1
38	3256–23	Washer – Lock	4
39	66–3160	Screw – Cap Hex. Hd.	4
40	87–8710	Tab – Clutch	1
41	3256–22	Washer – Flat	2
42	87–6620	Screw – Torx Hd.	2
43	42–9250	Screw – Cap Hex. Hd.	2

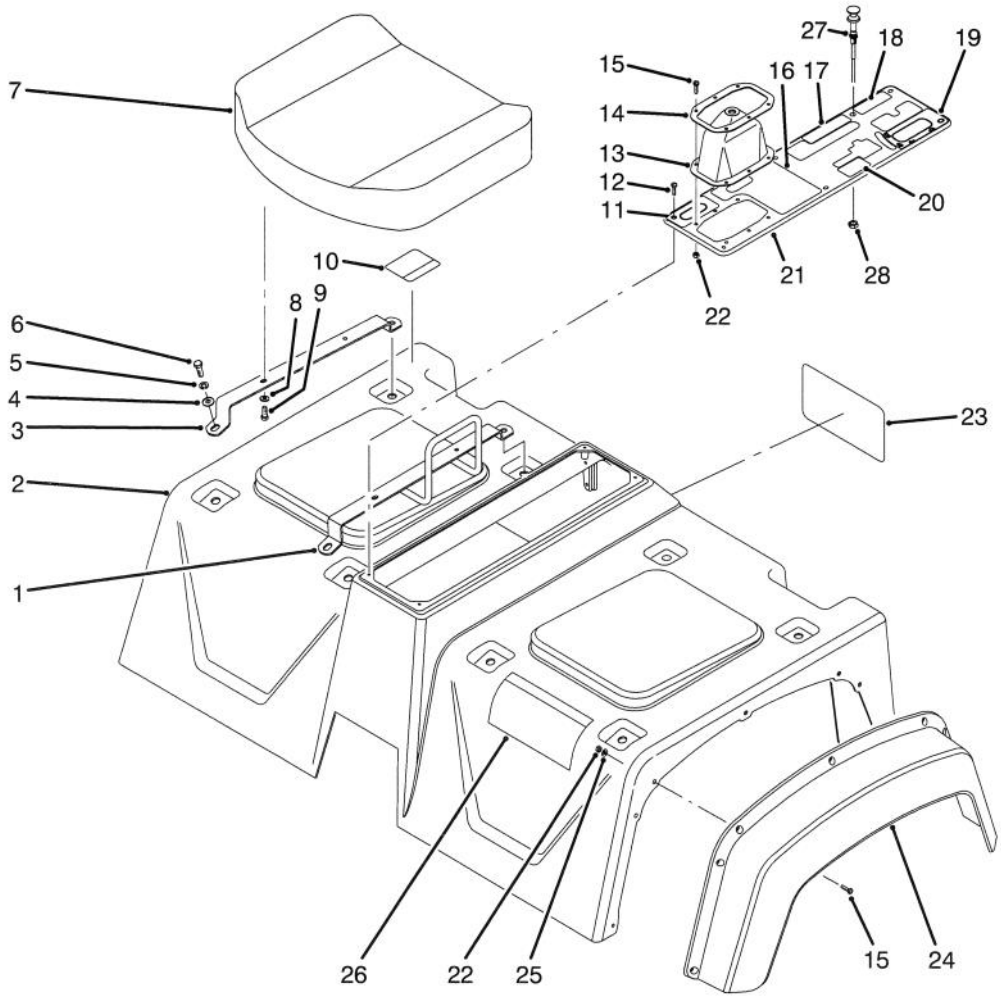

T–1589

SEAT BASE ASSEMBLY

Ref. No.	Part No.	Description	No. Used
1	87–6890	Hold – Hand	1
2	92–4199	Skirt Assembly (Incl. Ref. #10 & 26)	1
3	87–3800	Bracket – Seat Bottom	3
4	3256–23	Washer – Flat	4
5	3253–4	Washer – Lock	8
6	322–5	Screw – Cap Hex. Hd.	8
7	87–5060	Cushion – Seat Bottom	2
8	3256–22	Washer – Flat	8
9	321–4	Screw – Cap Hex. Hd.	8
‡10	87–5930	Decal – Caution (US)	1
‡*	93–9448	Decal – Caution (CE)	1
‡11	87–5960	Decal – Axle Range (US)	1
‡*	93–9857	Decal – Axle Range (CE)	1
12	32144–52	Screw – Hex. Hd.	6
13	87–8620	Boot – Shift	1
14	87–3760	Plate – Shift Boot	1
15	3250–13	Screw – Hex. Hd.	20
‡16	87–5970	Decal – PTO (US)	1
‡*	93–9861	Decal – PTO (CE)	1
‡17	87–6000	Decal – Differential (US)	1
‡*	93–9430	Decal – Differential (CE)	1
‡18	92–2609	Decal – Remote Hyd. (US)	1
‡*	93–9866	Decal – Remote Hyd. (CE)	1

Ref. No.	Part No.	Description	No. Used
‡19	87–6010	Decal – Dump Hyd. (US)	1
‡*	93–9444	Decal – Dump Hyd. (CE)	1
‡20	87–6020	Decal – Parking Brake (US)	1
‡*	93–9443	Decal – Parking Brake (CE)	1
21	87–8080	Console Plate Assembly (Incl. Ref. #11 & 16–20)	1
22	3296–2	Nut – Lock	20
‡23	87–9110	Decal – Quick Ref. (EN)	1
‡*	94–1201	Decal – Quick Ref. (DU)	1
‡*	94–1203	Decal – Quick Ref. (FR)	1
‡*	94–1204	Decal – Quick Ref. (GR)	1
‡*	94–1205	Decal – Quick Ref. (IT)	1
‡*	94–1209	Decal – Quick Ref. (SP)	1
‡*	94–1210	Decal – Quick Ref. (SW)	1
‡*	94–1200	Decal – Quick Ref. (DN)	1
‡*	94–1202	Decal – Quick Ref. (FN)	1
‡*	94–1207	Decal – Quick Ref. (NO)	1
‡*	94–1208	Decal – Quick Ref. (PO)	1
24	87–9480	Fender – Front	2
25	3256–61	Washer – Flat	14
‡26	87–5920	Decal – Danger (US)	1
‡*	93–9860	Decal – Danger (CE)	1

*Not Illustrated

‡For different language versions of this part, see International Decal Cross Reference.

3316–934

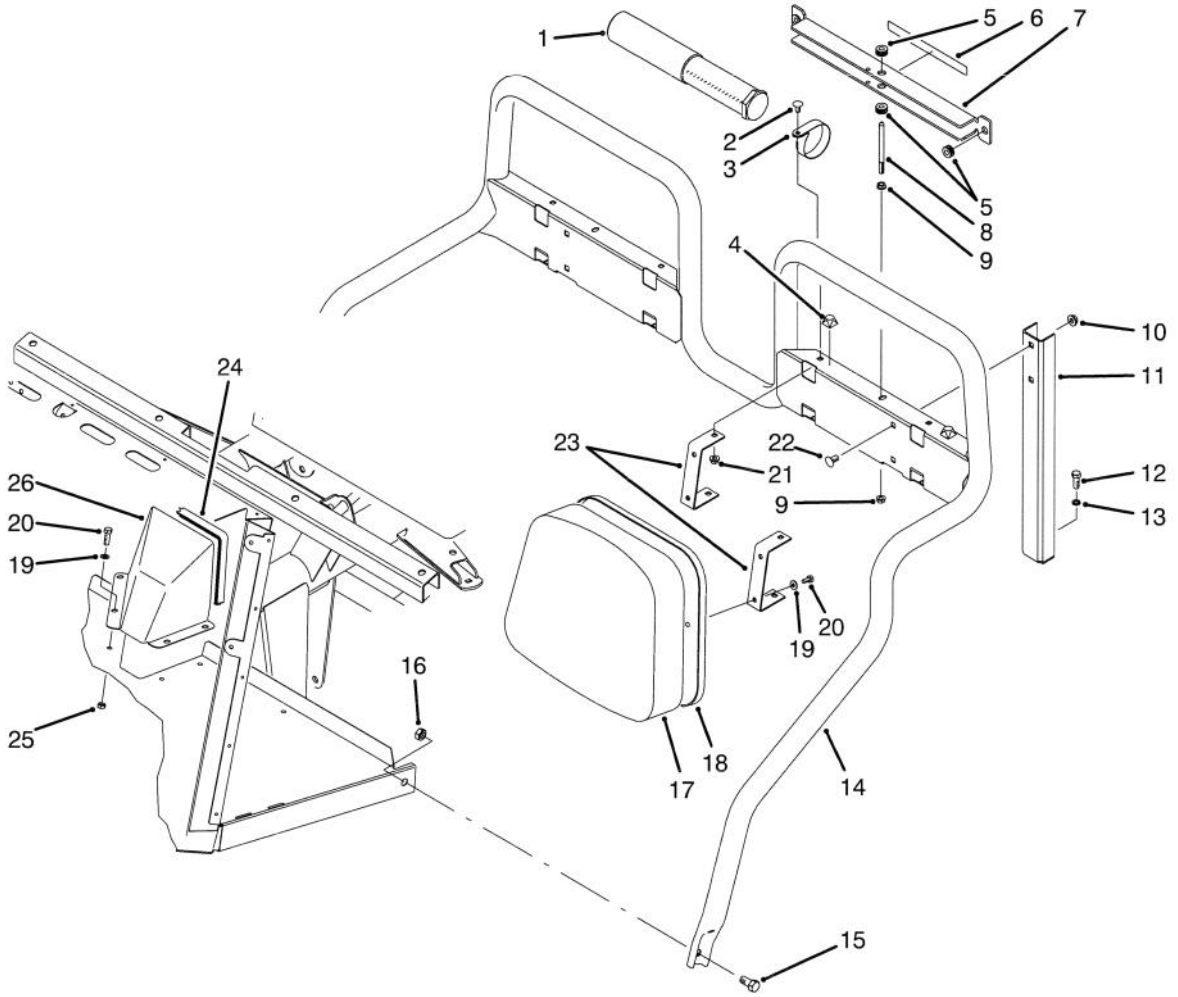

SEAT BACK ASSEMBLY

Ref. No.	Part No.	Description	No. Used
1	74–0720	Tube – Manual	1
2	3230–18	Bolt – Carriage	8
3	2412–133	Clamp – R	2
4	111071	Bumper	2
5	92–5972	Grommet	4
‡6	87–7930	Decal – Danger (US)	1
‡*	93–9852	Decal – Danger (CE)	1
7	87–7950	Bed Support Assembly (Incl. Ref. #5 & 6)	1
8	87–7940	Stud	1
9	32128–44	Nut – Flange Lock	2
10	3290–357	Nut – Flange Lock	4
11	87–2510	Bracket – Seat Frame	2
12	323–6	Screw – Cap Hex. Hd.	2

Ref. No.	Part No.	Description	No. Used
13	3253–21	Washer – Lock	2
14	87–6170	Frame – Seat	1
15	325–4	Screw – Cap Hex. Hd.	2
16	3296–23	Nut – Lock	2
17	87–6290	Cushion – Seat Back	2
18	87–6280	Plate – Seat Back	2
19	3256–22	Washer – Flat	12
20	322–2	Screw – Cap Hex. Hd.	12
21	32128–20	Nut – Flange Lock	8
22	3231–21	Bolt – Carriage	4
23	87–6240	Bracket – Seat Back	4
24	87–0710	Trim	1
25	32128–20	Nut – Lock	4
26	87–9650	Cover – Steering Gear	1

*Not Illustrated

‡For different language versions of this part, see International Decal Cross Reference.

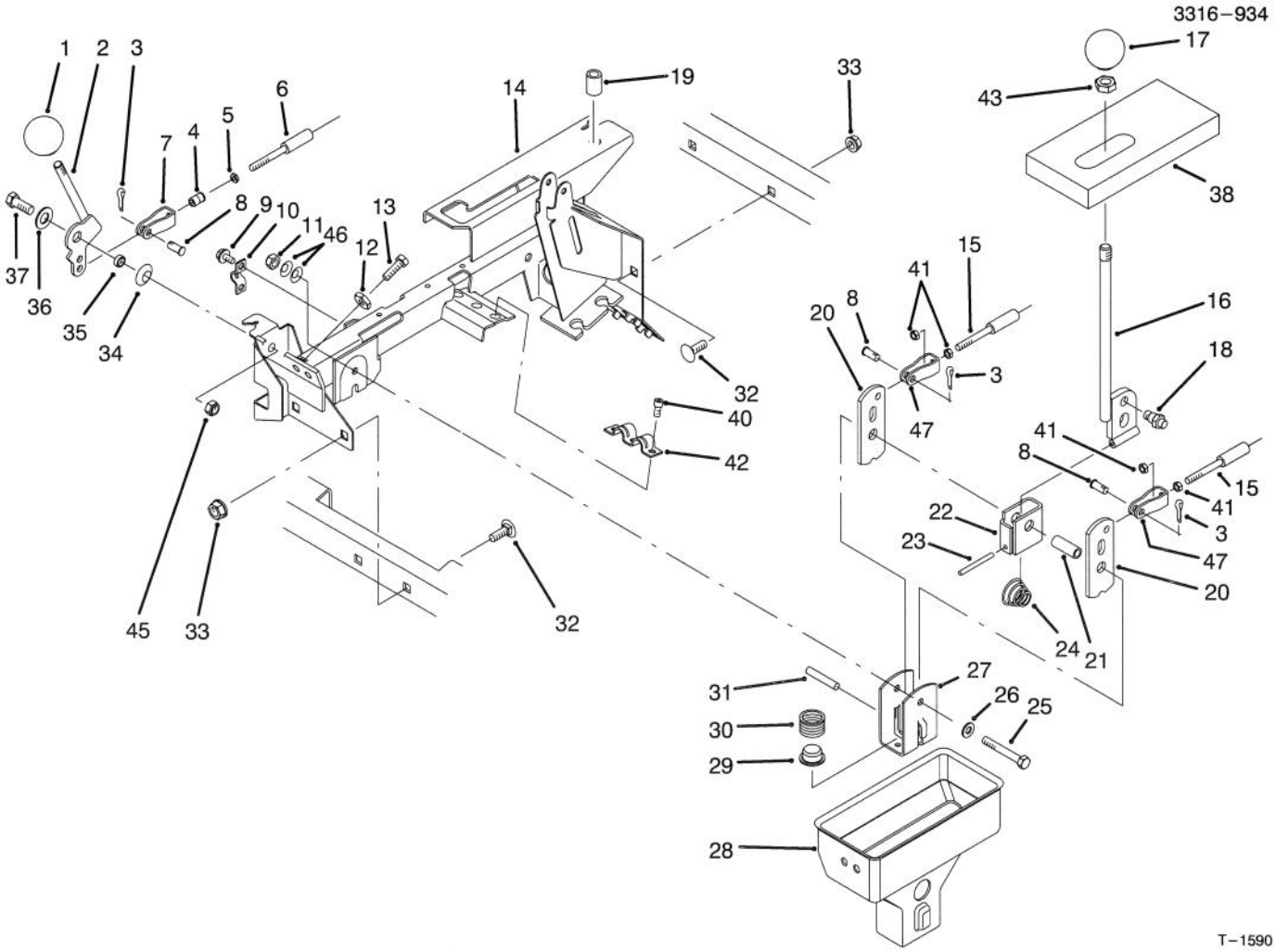

HI–LO & SHIFT LEVER ASSEMBLIES

Ref. No.	Part No.	Description	No. Used
1	233–37	Knob	1
2	87–4350	Lever – Hi–Lo	1
3	3272–6	Pin – Cotter	3
4	32148–15	Insert – Threaded	1
5	3219–14	Nut	1
6	93–7106	Hi–Lo Cable Assembly (Incl. Ref. #5)	1
7	87–7160	Assembly – Clevis, Cable (Incl. Ref. #4)	1
8	283–62	Pin – Clevis	3
9	32144–4	Screw – Hex. Washer Hd.	2
10	87–4340	Clamp – Cable	1
11	3296–58	Nut – Lock	1
12	3220–3	Nut – Jam	2
13	3211–8	Screw – Cap Hex. Hd.	2
14	87–8110	Lever Support Assembly (Incl. Ref. #19)	1
15	93–7105	Cable Assembly (Incl. Ref. #41)	2
16	87–2040	Lever – Shift	1
17	87–6720	Knob	1
18	87–3650	Pin – Shift	1
19	32148–7	Nut – Clinch	2
20	87–3540	Link – Shift	2
21	87–2520	Tube – Pivot	1

Ref. No.	Part No.	Description	No. Used
22	87–6040	Bracket – Shifter	1
23	32121–48	Pin – Roll	1
24	87–2900	Spring – Compression	1
25	322–12	Screw – Cap Hex. Hd.	1
26	87–8640	Washer – Flat	1
27	87–3520	Clevis	1
28	87–2260	Boot – Shift Lower	1
29	87–3530	Button – Shifter	1
30	87–3660	Spring – Compression	1
31	3290–507	Pin – Dowel	1
32	3231–21	Bolt – Carriage	4
33	3290–357	Nut – Flange Lock	4
34	3290–221	Washer – Spring	1
35	76–9100	Spacer – Hi–Lo Lever	1
36	49–9150	Washer – Flat	1
37	323–6	Screw – Cap Hex. Hd.	1
38	87–6570	Foam – Seal	1
40	65–5220	Screw – Hex. Socket Hd.	3
41	3220–1	Nut – Jam	4
42	87–4960	Clamp – Cable	1
43	3218–18	Nut – Jam	1
45	3296–39	Nut – Lock	1
46	3290–456	Washer – Belleville	2
47	87–2310	Clevis – Cable	2

3316–934

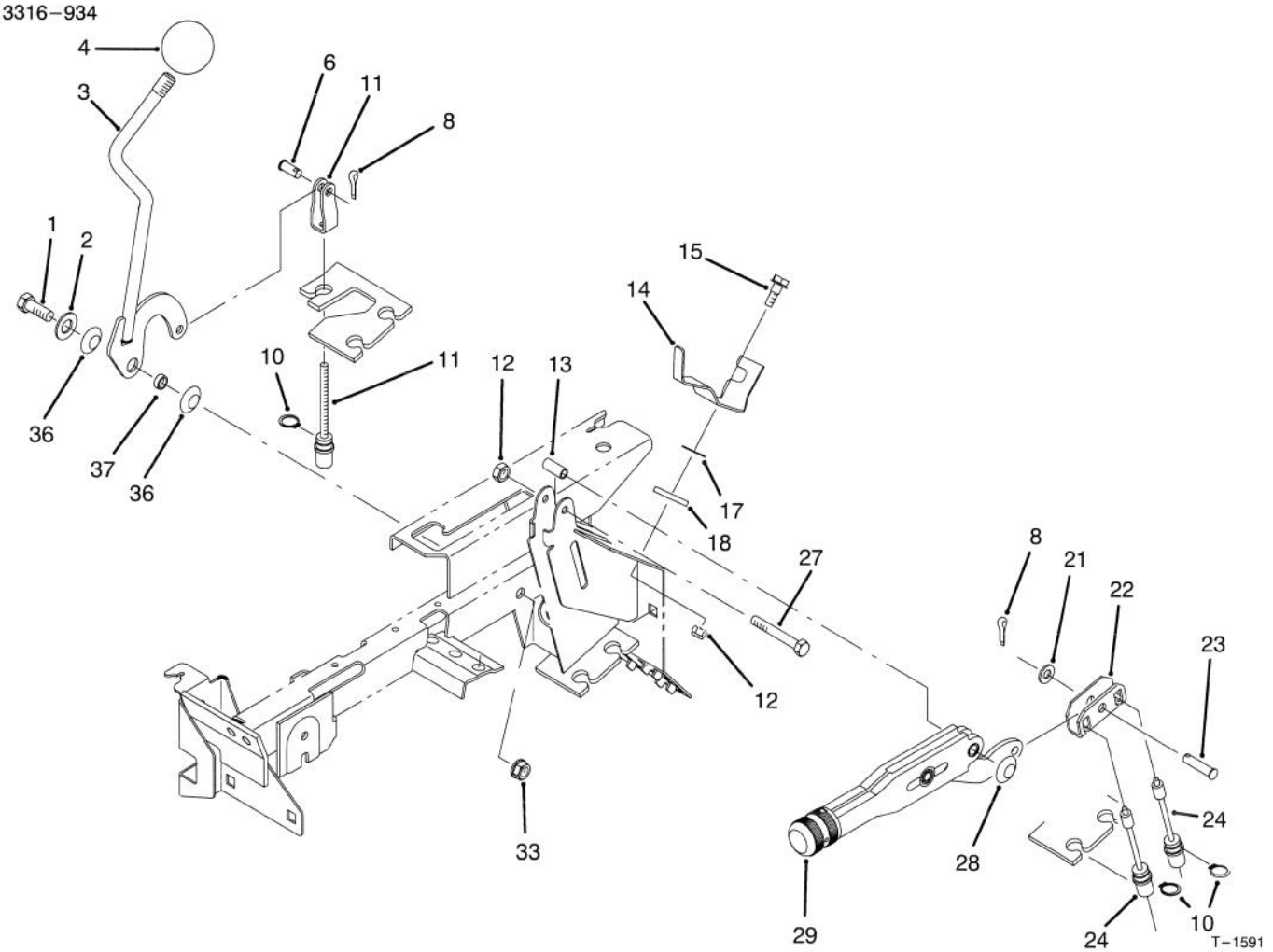

DIFFERENTIAL LOCK & PARKING BRAKE ASSEMBLIES

Ref. No.	Part No.	Description	No. Used
1	323–6	Screw – Cap Hex. Hd.	1
2	49–9150	Washer – Flat	1
3	87–5030	Lever – Differential Lock	1
4	233–48	Knob	1
6	283–62	Pin – Clevis	1
8	3272–10	Pin – Cotter	1
10	32120–47	Ring – Retaining	3
11	87–4460	Differential Lock Cable	1
12	3296–42	Nut – Lock	1
13	87–4710	Spacer – Barking Brake	1
14	87–6640	Lever – Dump Stop	1
15	42–3560	Screw – Shoulder	1

Ref. No.	Part No.	Description	No. Used
17	3290–478	Washer – Belleville	1
18	71–5320	Washer – Flat	1
21	3256–23	Washer – Flat	1
22	87–3480	Plate – Brake Equalizer	1
23	283–14	Pin – Clevis	1
24	93–7107	Cable – Parking Brake	2
27	321–9	Screw – Cap Hex. Hd.	1
28	3290–477	Washer – Curved	1
29	87–2710	Lever – Parking Brake	1
33	3296–39	Nut – Lock	1
36	3290–221	Washer – Spring	2
37	76–2290	Spacer	1

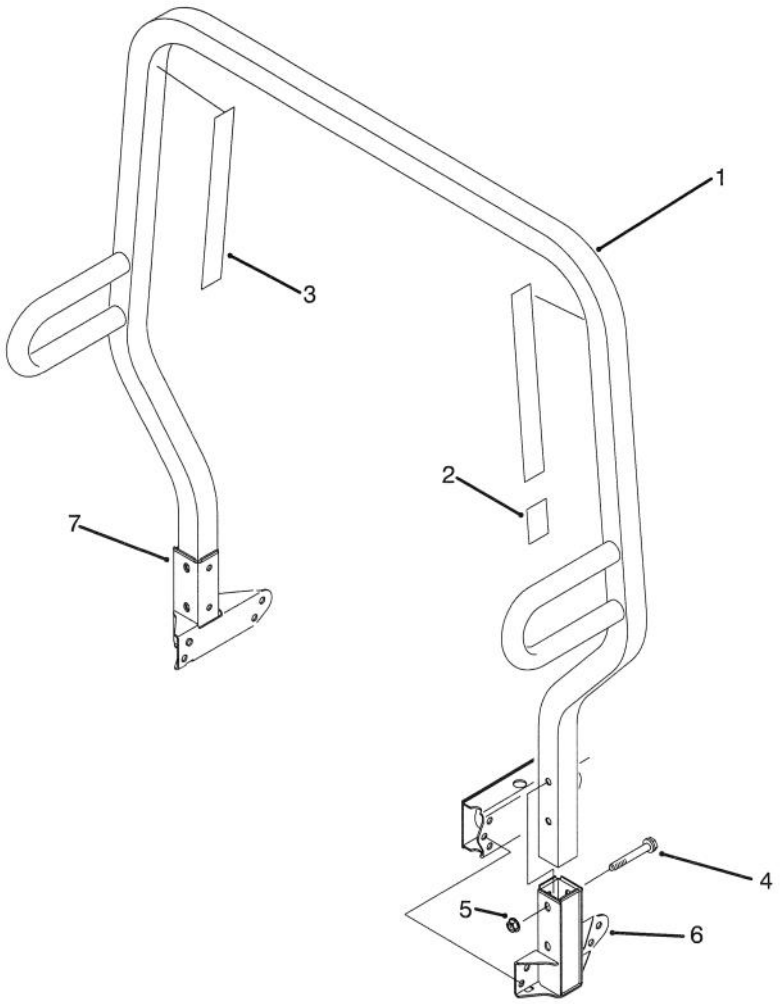

T–1592

R.O.P.S. ASSEMBLY

Ref. No.	Part No.	Description	No. Used
1	87–7090	Assembly – Frame, R.O.P.S. (Incl. Ref. #2 & 3)	1
‡2	87–5940	Decal – Rollover (US)	1
‡*	93–9850	Decal – Rollover (CE)	1
‡3	87–5980	Decal – ROPS (US)	2
‡*	93–9859	Decal – ROPS (CE)	2

Ref. No.	Part No.	Description	No. Used
4	3234–40	Screw – Hex. Flange Hd.	4
5	32128–23	Nut – Flange Lock	4
6	87–6950	Receiver – LH	1
7	87–6960	Receiver – RH	1

*Not Illustrated

‡For different language versions of this part, see International Decal Cross Reference.

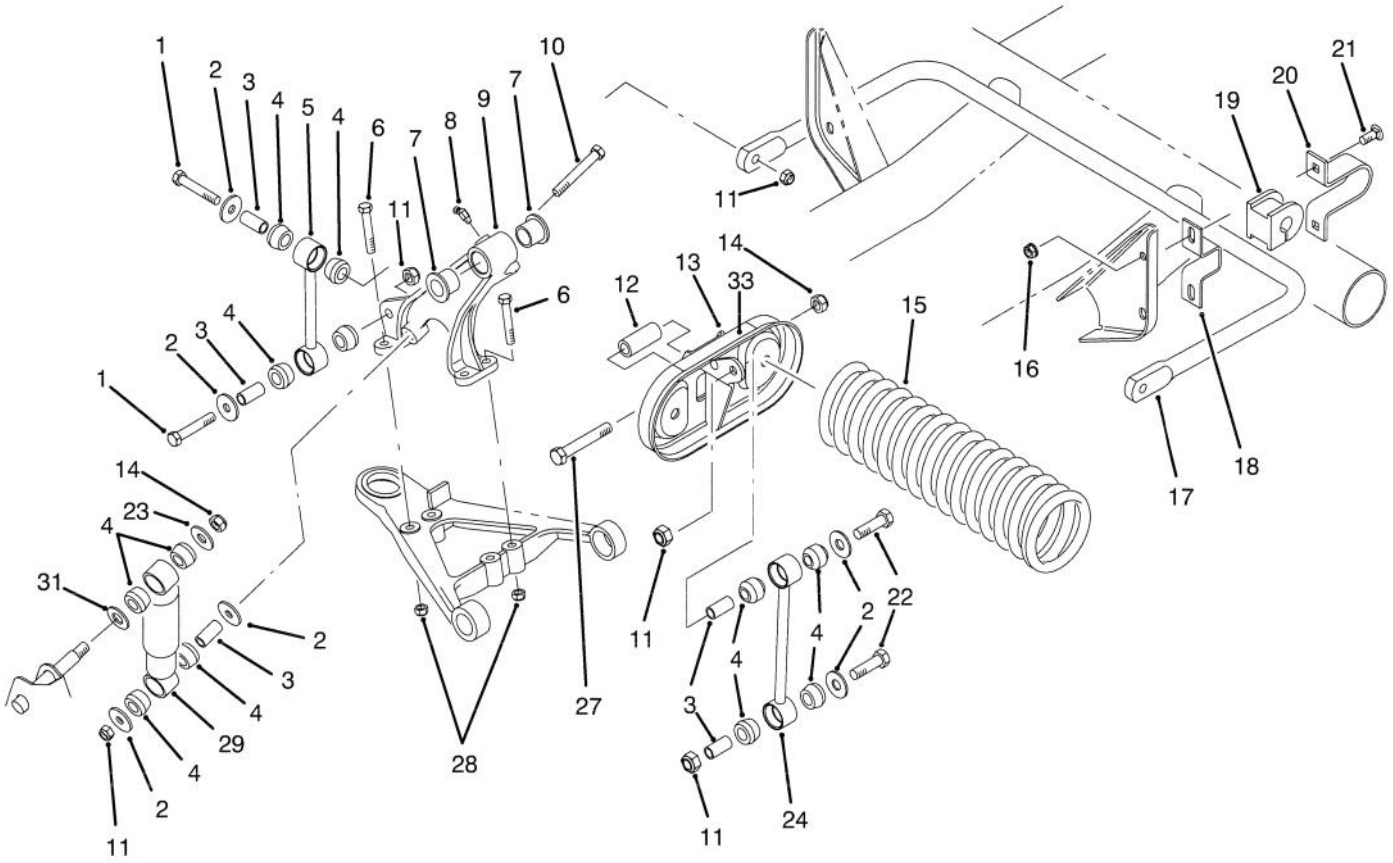

T–1593

FRONT SUSPENSION ASSEMBLY

Ref. No.	Part No.	Description	No. Used
1	324–10	Screw – Cap Hex. Hd.	4
2	87–5330	Washer	8
3	87–3600	Spacer	10
4	87–3920	Bushing – Rubber	16
5	87–3860	Link – Anti–Sway Bar	2
6	323–12	Screw – Cap Hex. Hd.	8
7	33–3090	Bushing – Flange	4
8	302–11	Fitting – Grease	1
9	87–0150	Tower – Control Arm RH	1
*	87–0160	Tower – Control Arm LH	1
10	324–13	Screw – Cap Hex. Hd.	2
11	3296–48	Nut – Lock	10
12	87–2500	Sleeve –Spring Pivot	2
13	87–7150	Assembly – Cradle, Spring (Incl. Ref. #33)	2
14	3296–23	Nut – Lock	4

Ref. No.	Part No.	Description	No. Used
15	87–0690	Spring – Compression	2
16	3290–357	Nut – Flange Lock	4
17	87–3850	Bar – Anti–Sway	1
18	87–3890	Bracket – Anti–Sway Bar	2
19	87–3910	Bushing – Anti–Sway Bar	2
20	87–4010	Clamp – Anti–Sway Bar	2
21	3231–3	Bolt – Carriage	4
22	324–9	Screw – Cap Hex. Hd.	4
24	87–2480	Link – Stabilizer	2
27	325–13	Screw – Cap Hex. Hd.	4
28	3296–39	Nut – Lock	8
29	87–3110	Absorber – Shock	2
31	3256–27	Washer – Flat	2
32	3256–6	Washer – Flat	2
‡33	44–0760	Decal – Warning (US)	2
‡*	93–9879	Decal – Warning (CE)	2

*Not Illustrated

‡For different language versions of this part, see International Decal Cross Reference.

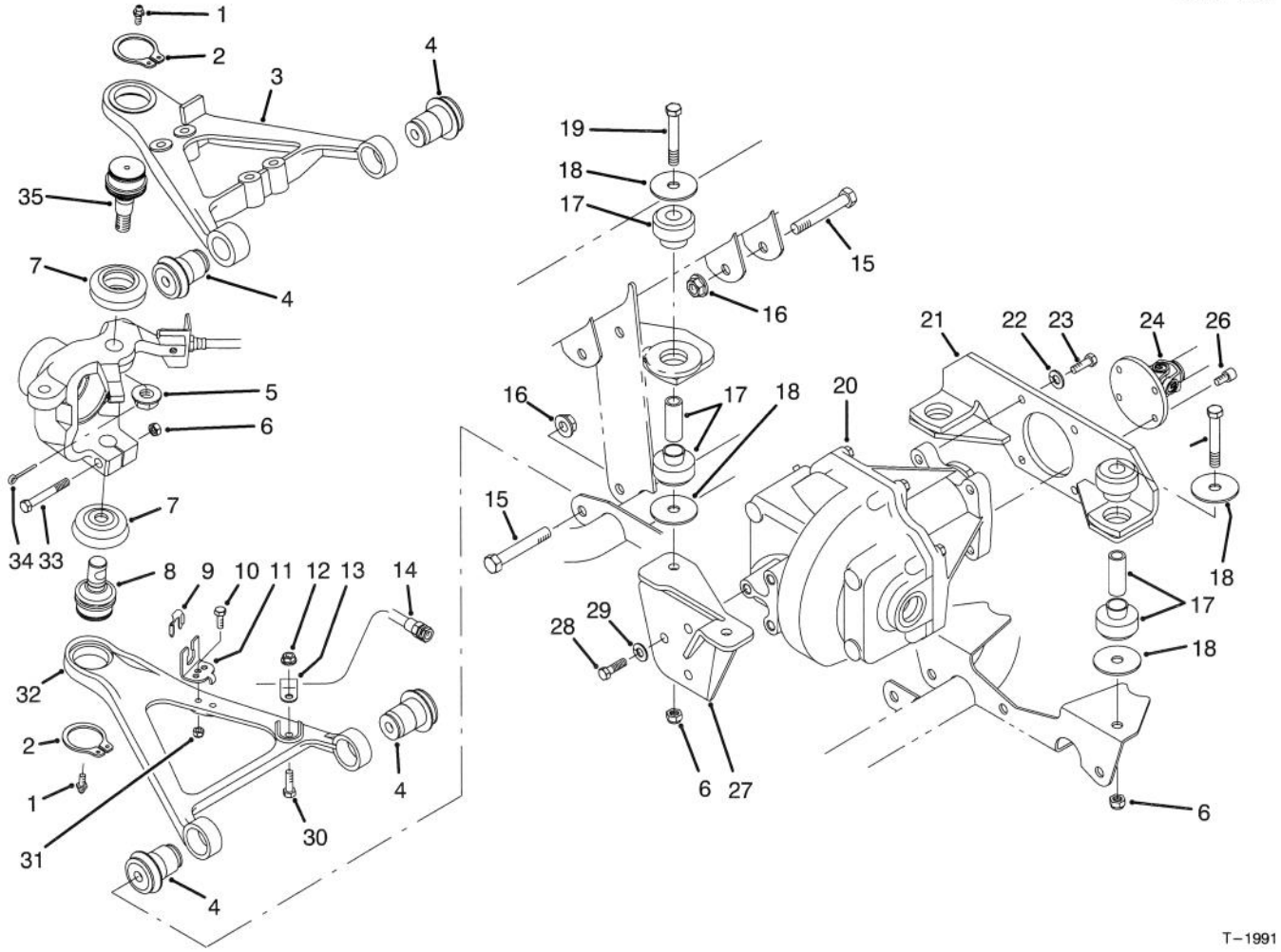

FRONT SUSPENSION CONTROL ARM ASSEMBLY

Ref. No.	Part No.	Description	No. Used
1	302–5	Fitting – Grease	4
2	32151–104	Ring – Retaining	4
3	93–7135	Arm – Control Upper RH	1
*	93–7133	Arm – Control Upper LH	1
4	87–1450	Bushing – Flange	8
5	32136–2	Nut – Hex. Slotted	2
6	3296–48	Nut – Lock	4
7	87–2420	Seal – Ball Joint	4
8	93–7052	Joint – Lower Ball	2
9	87–3580	Retainer	2
10	321–6	Screw – Cap Hex. Hd.	2
11	93–7070	Bracket – Brake Hose	2
12	32128–20	Nut – Lock	2
13	2412–10	Clamp – R	2
14	93–7059	Hose – Brake Front	2
15	325–13	Screw – Cap Hex. Hd.	2
16	3296–23	Nut – Hex.	8
17	87–4970	Engine Mount Assembly	4

Ref. No.	Part No.	Description	No. Used
18	87–5100	Washer – Snubbing	8
19	324–12	Screw – Cap Hex. Hd.	4
20	93–7054	Front Differential Assembly	1
21	93–7074	Mount – Differential Rear	1
22	3253–21	Washer – Lock	4
23	323–7	Screw – Cap Hex. Hd.	4
24	93–7116	Differential Driveshaft Assy.	1
26	3274–97	Screw – Socket Hex. Hd.	6
27	93–7118	Bracket – Differential Front	1
28	324–5	Screw – Cap Hex. Hd.	3
29	3253–6	Washer – Lock	3
30	322–5	Screw – Cap Hex. Hd.	2
31	3296–42	Nut – Lock	2
32	87–0210	Arm – Control Lower RH	1
*	87–0220	Arm – Control Lower LH	1
33	324–11	Screw – Cap Hex. Hd.	2
34	3272–10	Pin – Cotter	2
35	87–1430	Joint – Upper Ball	2

*Not Illustrated

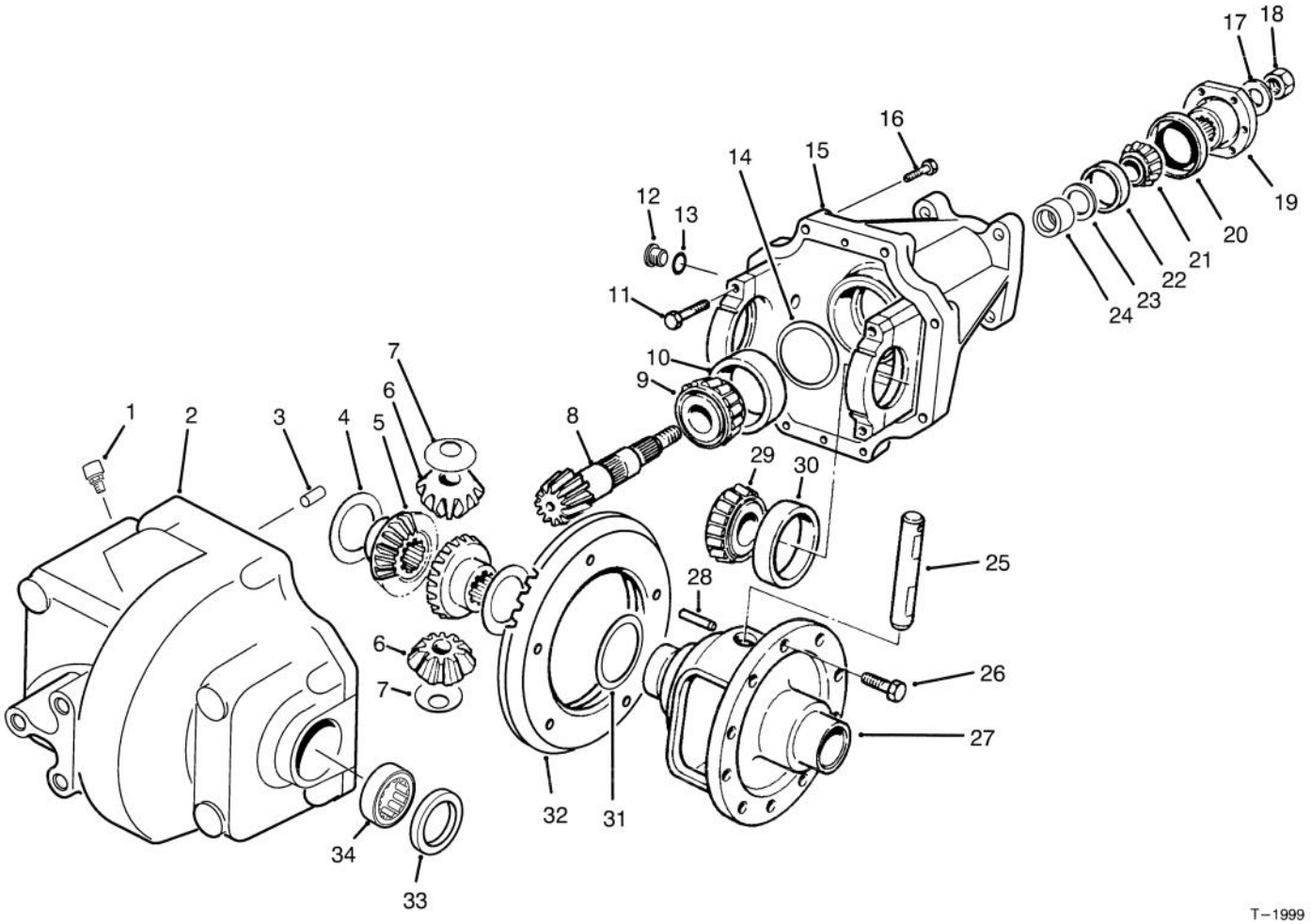

T–1999

FRONT DIFFERENTIAL ASSEMBLY NO. 93–7054

Ref. No.	Part No.	Description	No. Used
1	93–8910	Vent	1
2	93–8908	Housing – Front	1
3	21–8270	Pin – Alignment	2
4	21–7720	Washer – Thrust	2
5	93–8911	Gear – Bevel Side	2
6	21–7690	Gear – Pinion	2
7	21–7730	Washer – Thrust	2
8	93–3618	Pinnion & Ring Gear Assy. (Incl. Ref. #32)	1
9	43–6760	Cone – Bearing	1
10	43–6750	Cup – Bearing	1
11	92–1773	Screw – Cap Hex. Hd.	4
12	93–8916	Plug Assembly (Incl. Ref. #13)	2
13	237–79	Seal – O–Ring	2
14	43–6710	Shim – .003"	A/R
*	43–6711	Shim – .005"	A/R
*	43–6712	Shim – .010"	A/R
*	43–6713	Shim – .030"	A/R
15	93–8900	Carrier Assembly (Incl. Ref. #11)	1
16	93–8909	Screw – Cap Hex. Hd.	8
17	71–4340	Washer	1
18	71–4350	Nut – Lock	1
19	93–8903	Flange	1

Ref. No.	Part No.	Description	No. Used
20	71–4330	Seal – Oil	1
21	93–8904	Shim – .003"	A/R
*	93–8905	Shim – .005"	A/R
*	93–8906	Shim – .010"	A/R
*	93–8907	Shim – .030"	A/R
22	264–91	Cone – Bearing	1
23	254–90	Cup – Bearing	1
24	93–8902	Spacer – Bearing	1
25	21–7700	Shaft – Pinnion	1
26	21–7770	Screw – Cap Hex. Hd.	5
27	21–7670	Case – Differential	1
28	32121–15	Pin – Roll	1
29	254–65	Cone – Bearing	2
30	254–66	Cup – Bearing	2
31	21–8090	Shim – .003"	A/R
*	21–8100	Shim – .005"	A/R
*	21–8110	Shim – .010"	A/R
*	21–8120	Shim – .030"	A/R
32		Gear – Ring	1
33	93–8918	Seal – Oil	2
34	93–8917	Bearing – Needle	2
*	93–8901	Differential Case Assembly (Incl. Ref. #4–7, 25, 27 & 28)	1

*Not Illustrated

3316–934

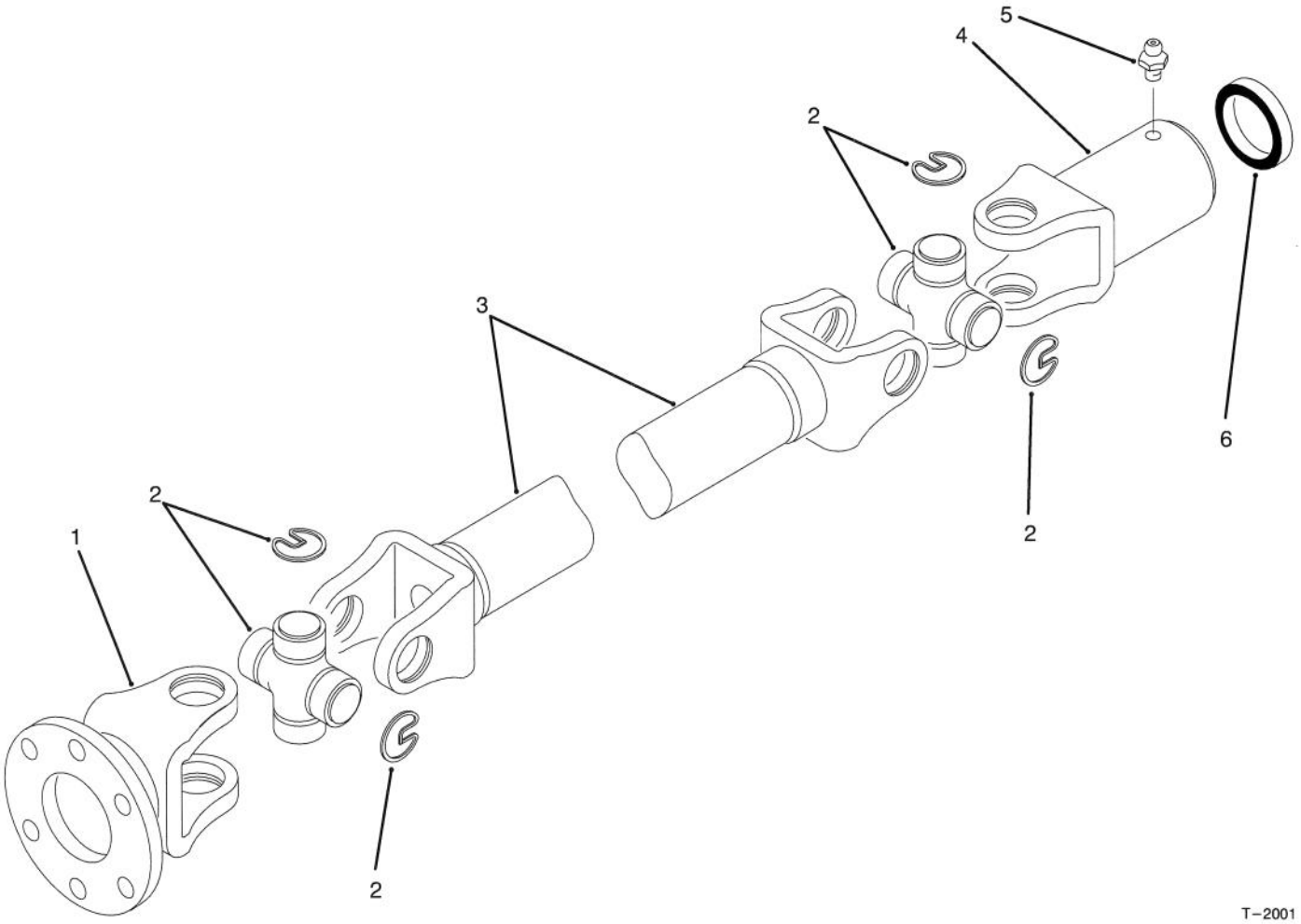

T–2001

DIFFERENTIAL DRIVESHAFT ASSEMBLY NO. 93–7116

Ref. No.	Part No.	Description	No. Used
1	92–4193	Yoke – Flange	1
2	54–9180	Cross & Bearing Kit	2
3	92–4194	Yoke – Tube	1
4	92–4195	Slip Yoke Assembly (Incl. Ref. #5)	1

Ref. No.	Part No.	Description	No. Used
5	302–11	Fitting – Grease	1
6	92–4196	Seal	1
*	93–7116	Driveshaft Assembly (Incl. Ref. #1–6)	1

*Not Illustrated

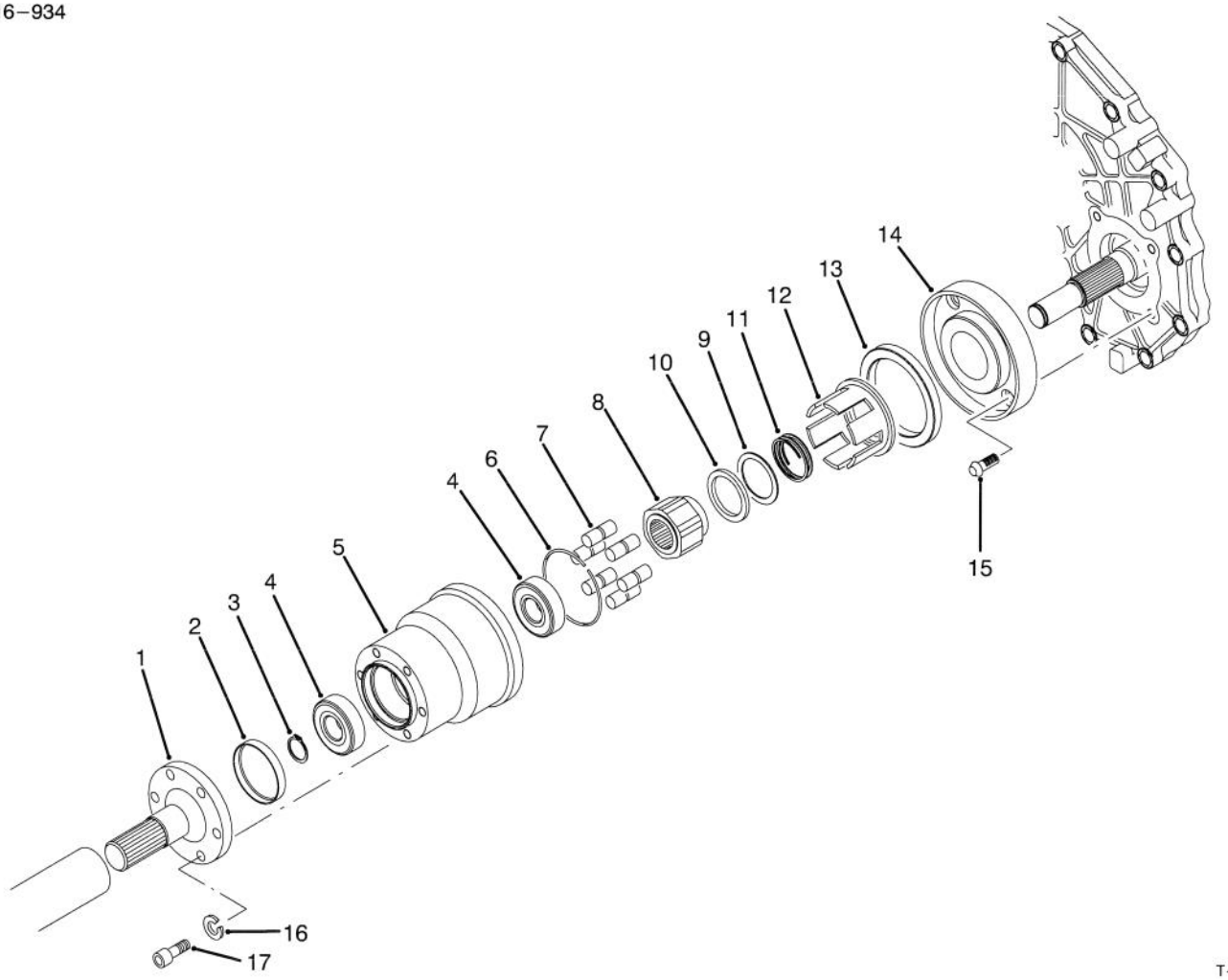

T–1993

BIDIRECTIONAL CLUTCH ASSEMBLY

Ref. No.	Part No.	Description	No. Used
1	87–9840	Shaft – Clutch	1
2	87–9220	Plug – Seal	1
3	87–9370	Ring – Retaining	1
4	251–8	Bearing – Ball	2
5	93–8920	Housing & Race	1
6	93–8922	Spring – Garter	1
7	93–8925	Roller	6
8	93–8924	Cam	1
9	93–8929	Washer – Thrust	1
10	93–8919	Bearing – Thrust	1

Ref. No.	Part No.	Description	No. Used
11	93–8923	Spring	1
12	93–8921	Cage	1
13	87–9360	Seal – Oil	1
14	93–7117	Plate – Adaptor	1
15	3274–96	Screw	4
16	3253–4	Washer – Lock	6
17	3274–97	Screw – Hex. Socket Hd.	6
*	93–7115	Bidirectional Clutch Assembly (Incl. Ref. #5–12)	1

*Not Illustrated

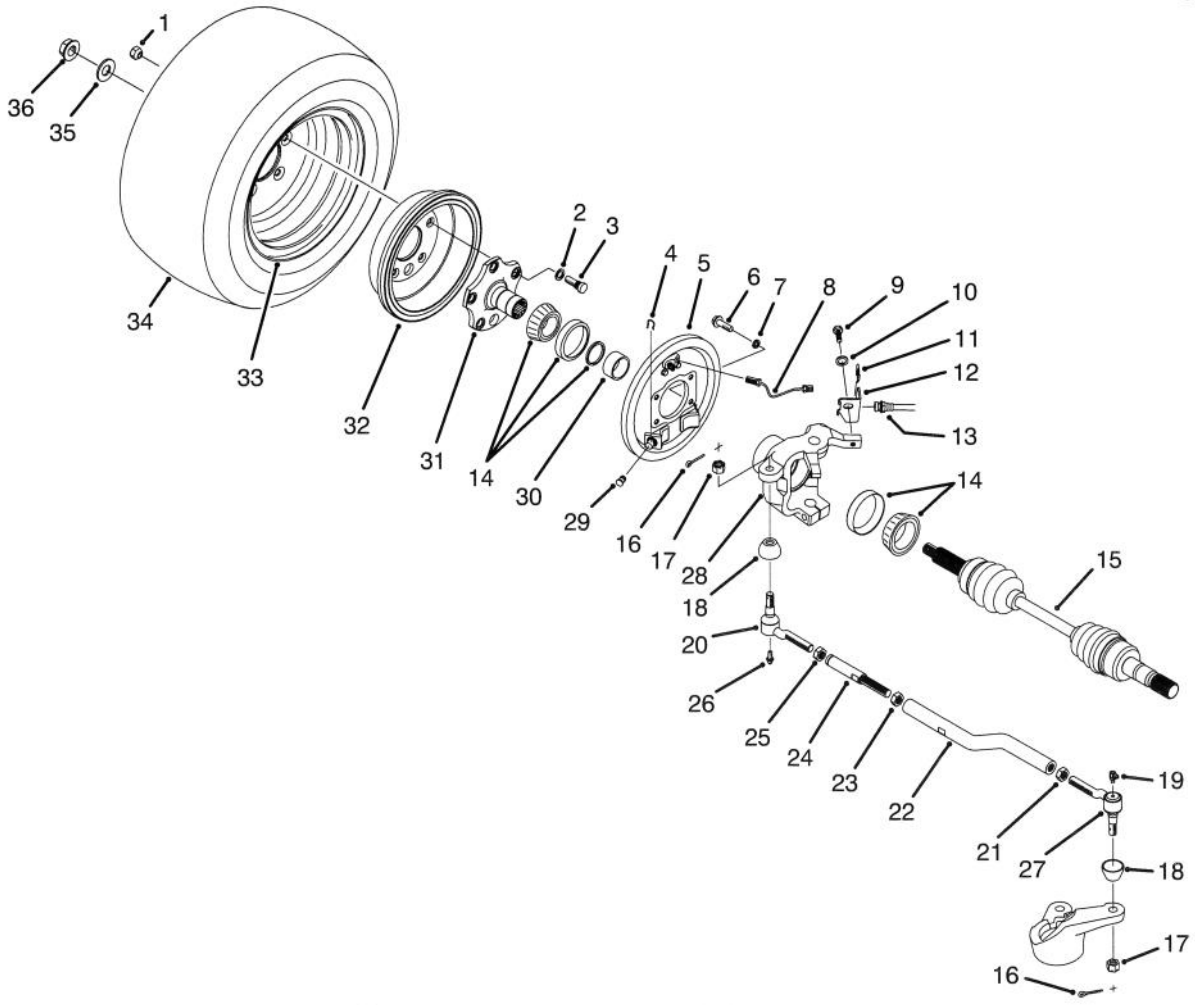

FRONT WHEEL ASSEMBLY

Ref. No.	Part No.	Description	No. Used
1	23–7270	Nut – Lug	10
2	3253–6	Washer – Lock	10
3	87–2080	Screw – Cap Hex. Hd.	10
4	87–3310	Clip – Brake Cable	2
5	87–9170	Brake Assembly RH	1
*	87–9180	Brake Assembly LH	1
6	323–6	Screw – Cap Hex. Hd.	8
7	3253–21	Washer – Lock	8
8	93–7080	Tube – Brake RH	1
*	93–7079	Tube – Brake LH	1
9	323–4	Screw – Cap Hex. Hd.	2
10	3256–24	Washer – Flat	2
11	87–3580	Retainer	2
12	93–7071	Bracket – Brake Hose RH	1
*	93–7058	Bracket – Brake Hose LH	1
13	93–7059	Hose – Brake Front	2
14	87–9200	Bearing – Sealed	4
15	93–7078	Constant Velocity Joint Assy.	2
16	3272–12	Pin – Cotter	4
17	32136–3	Nut – Hex. Slotted	4
18		Seal – Dust	4
19	302–60	Fitting – Grease 90°	2
20	87–1470	Tie Rod End Assembly (Left Hand Threaded) (Incl. Ref. #16–18 & 26)	2

Ref. No.	Part No.	Description	No. Used
21	3218–21	Nut – Jam (Left Hand Threaded)	2
22	93–7056	Rod – Tie RH	1
*	93–7057	Rod – Tie LH	1
23	3220–7	Nut – Jam	1
24	93–7055	Turnbuckle	1
25	3220–11	Nut – Jam	2
26	302–5	Fitting – Grease	3
27	87–1480	Tie Rod End Assembly (Incl. Ref. #16–19)	2
28	87–9600	Housing – Axle RH	1
*	87–9620	Housing – Axle LH	1
29	87–3450	Plug	2
30	87–9210	Spacer	2
31	87–9190	Stub – Axle	2
32	93–7128	Drum – Brake	2
33	87–7520	Rim	2
34	87–3300	Tire	2
35	87–3060	Washer – Flat	2
36	32128–53	Nut – Flange Lock	2
*	87–3400	Wheel & Tire Assembly	2
*	87–5340	Seal Kit – Tie Rod End (Incl. Ref. #16–18 & 26)	4

*Not Illustrated

3316–934

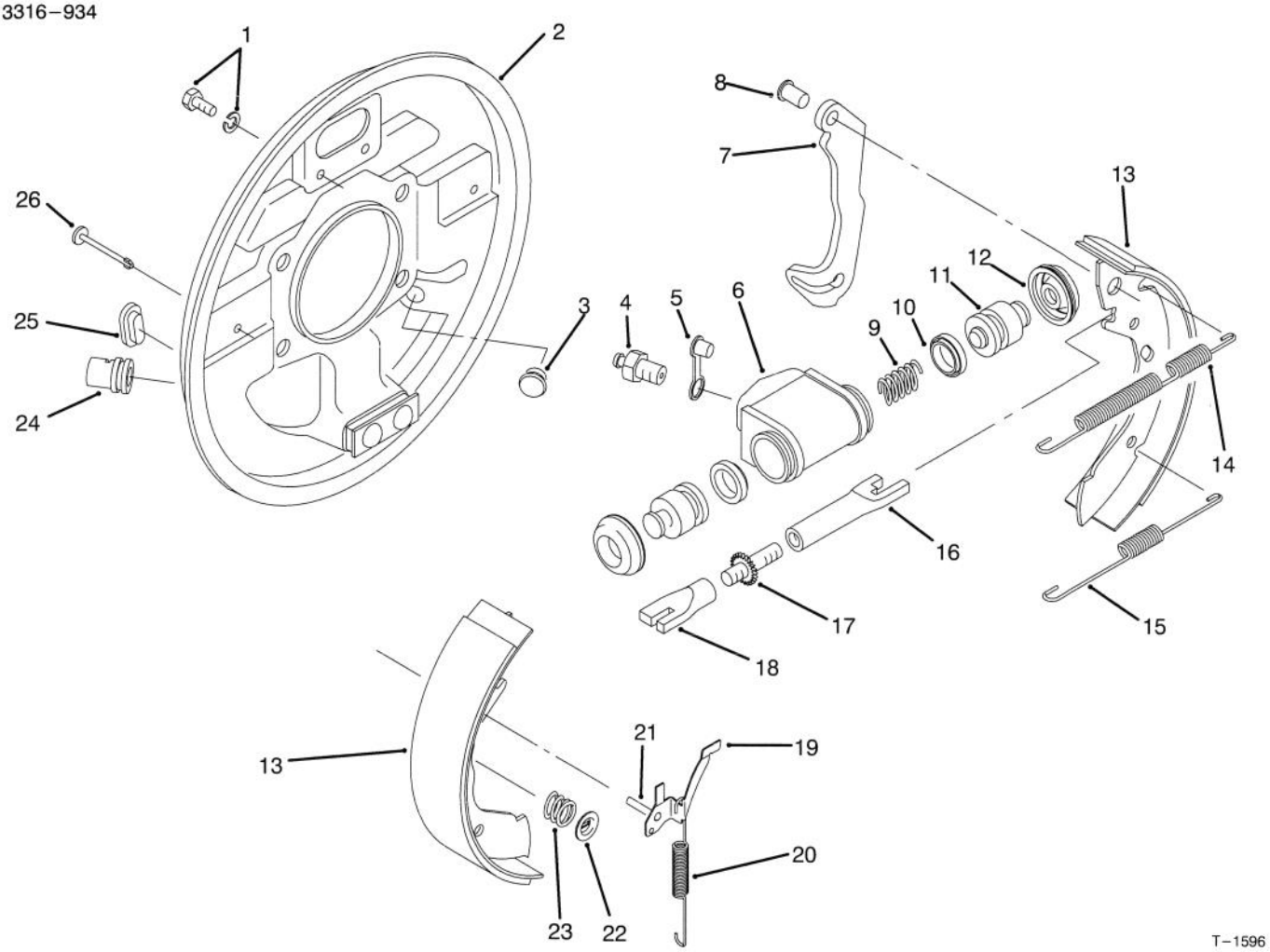

T–1596

FRONT BRAKE ASSEMBLY

Ref. No.	Part No.	Description	No. Used
1	92–4135	Set Bolt	2
2	92–4136	Backplate Assembly LH (Incl. Ref. #24)	1
*	92–4100	Backplate Assembly RH (Incl. Ref. #24)	1
3	92–4125	Plug	1
4	92–4113	Screw – Bleed	1
5	92–4114	Cap – Bleed Screw	1
6		Body	1
7		Lever – Operating LH/RH	1
8		Pin	1
9		Spring	1
10		Seal – 'L' Type	2
11		Piston	2
12		Cover – Dust	2
13	92–4120	Shoe & Lining Set (Incl. Ref. #7 & 8)	1
14	92–4126	Spring – Shoe, Upper LH	1
*	92–4127	Spring – Shoe, Upper RH	1
15	92–4128	Spring – Shoe, Lower	1
16		Pushrod – Female LH	1
*		Pushrod – Female RH	1
17		Bolt – Adjuster	1
18		Sleeve – Adjuster	1

Ref. No.	Part No.	Description	No. Used
19	92–4123	Assembly – Pawl LH (Incl. Ref. #21)	1
*	92–4124	Assembly – Pawl RH (Incl. Ref. #21)	1
20	92–4129	Spring – Adjuster, LH	1
*	92–4130	Spring – Adjuster, RH	1
21		Pin – Pawl	1
22	92–4131	Washer – Hold Down	2
23	92–4132	Spring – Hold Down	2
24		Guide – Pipe	1
25	92–4134	Plug – Inspection	1
26	92–4133	Pin – Hold Down	2
*	92–4121	Assembly – Adjuster LH (Inc. Ref. #16–18)	1
*	92–4122	Assembly – Adjuster RH (Incl. Ref. #16–18)	1
*	92–4117	Assy. – Wheel Cylinder LH (Incl. Ref. #4–6 & 9–12)	1
*	92–4118	Assy. – Wheel Cylinder RH (Incl. Ref. #4–6 & 9–12)	1
*	92–4119	Kit – Seal (Incl. Ref. #10 & 12)	1
*	87–9170	Front Brake Assembly – RH (Complete)	1
*	87–9180	Front Brake Assembly – LH (Complete)	1

*Not Illustrated

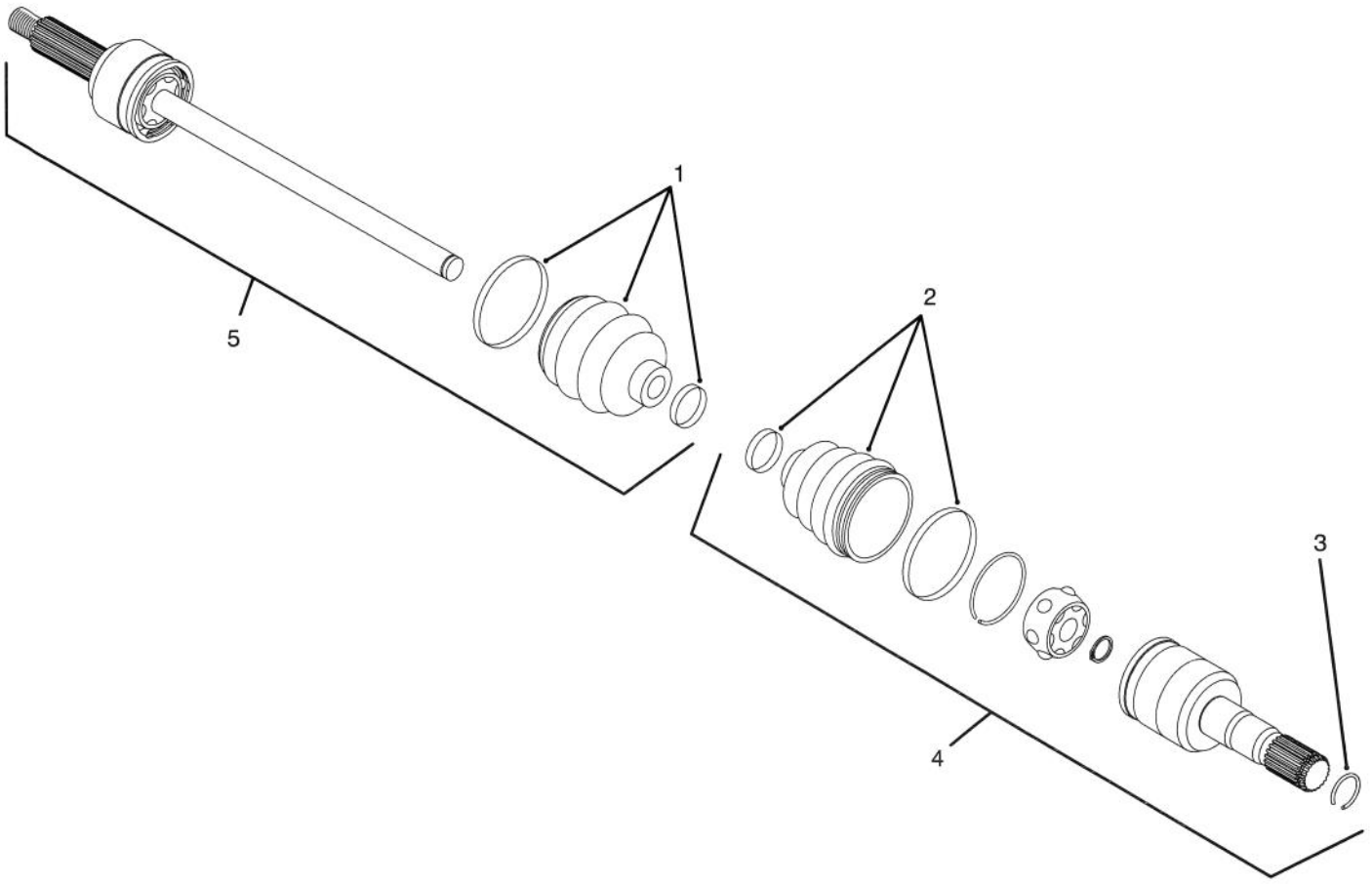

T–2111

CONSTANT VELOCITY (CV) JOINT ASSEMBLY NO. 93–7078

Ref. No.	Part No.	Description	No. Used
1	93–8982	Boot Kit – Outboard	1
2	93–8983	Boot Kit – Inboard	1
3	93–8985	Clip – Circular	1
4	93–8984	Joint Assembly – Inboard	1
5	93–8981	Joint & Shaft – Outboard	1

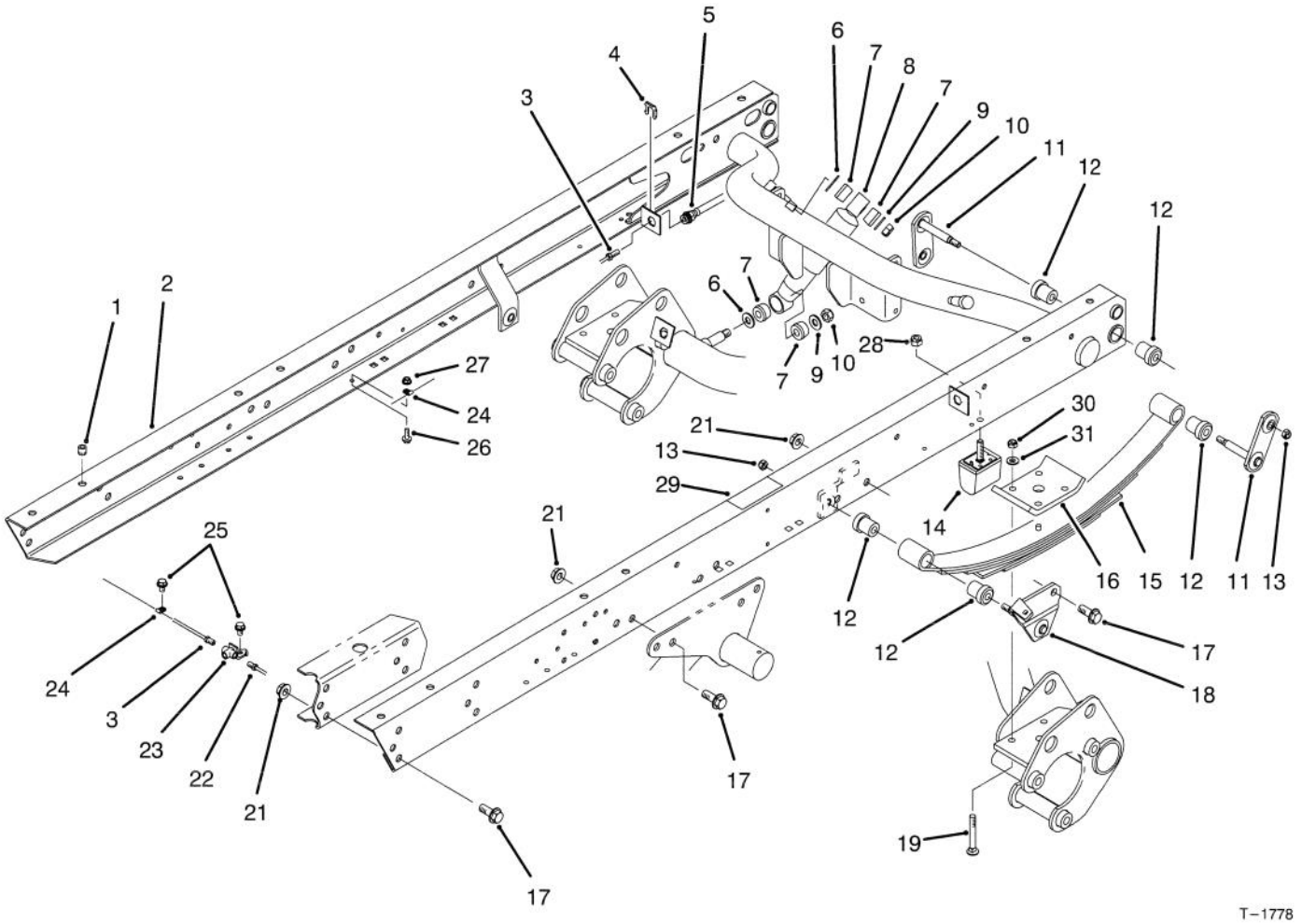

REAR FRAME ASSEMBLY

Ref. No.	Part No.	Description	No. Used
1	32148–10	Insert – Threaded	6
2	87–8440	Assembly – Rear Frame (Incl. Ref. #1 & 32)	1
3	87–3270	Tube – Brake RH	1
4	87–3580	Retainer	2
5	87–4100	Hose – Brake	2
6	3256–27	Washer – Flat	4
7	87–3920	Bushing – Rubber	8
8	87–3110	Shock Absorber	2
9	3256–6	Washer – Flat	4
10	3296–23	Nut – Lock	4
11	87–3980	Shackle – Spring	4
12	87–4760	Bushing	12
13	3296–39	Nut – Lock	6
14	87–3470	Bumper – Spring	2
15	87–1490	Spring – Leaf	2
16	87–7470	Plate – Clamp	2

Ref. No.	Part No.	Description	No. Used
17	3234–38	Screw – Hex. Flange Hd.	22
18	87–3960	Mount – Spring LH	1
*	87–3940	Mount – Spring RH	1
19	3232–17	Bolt – Carriage	8
21	32128–23	Nut – Flange Lock	22
22	87–3280	Tube – Brake LH	1
23	87–3560	Tee – Brake Tube	1
24	2412–149	Clamp – Tube	5
25	32104–82	Screw – Hex. Flange Hd.	2
26	321–4	Screw – Hex. Flange Hd.	4
27	32128–33	Nut – Flange Lock	4
28	48–9520	Nut – Lock	2
‡29	66–6840	Decal – Caution (US)	2
‡*	93–8071	Decal – Caution (CE)	2
30	3296–76	Nut – Lock	8
31	87–7480	Washer – Flat	8

*Not Illustrated

‡For different language versions of this part, see International Decal Cross Reference.

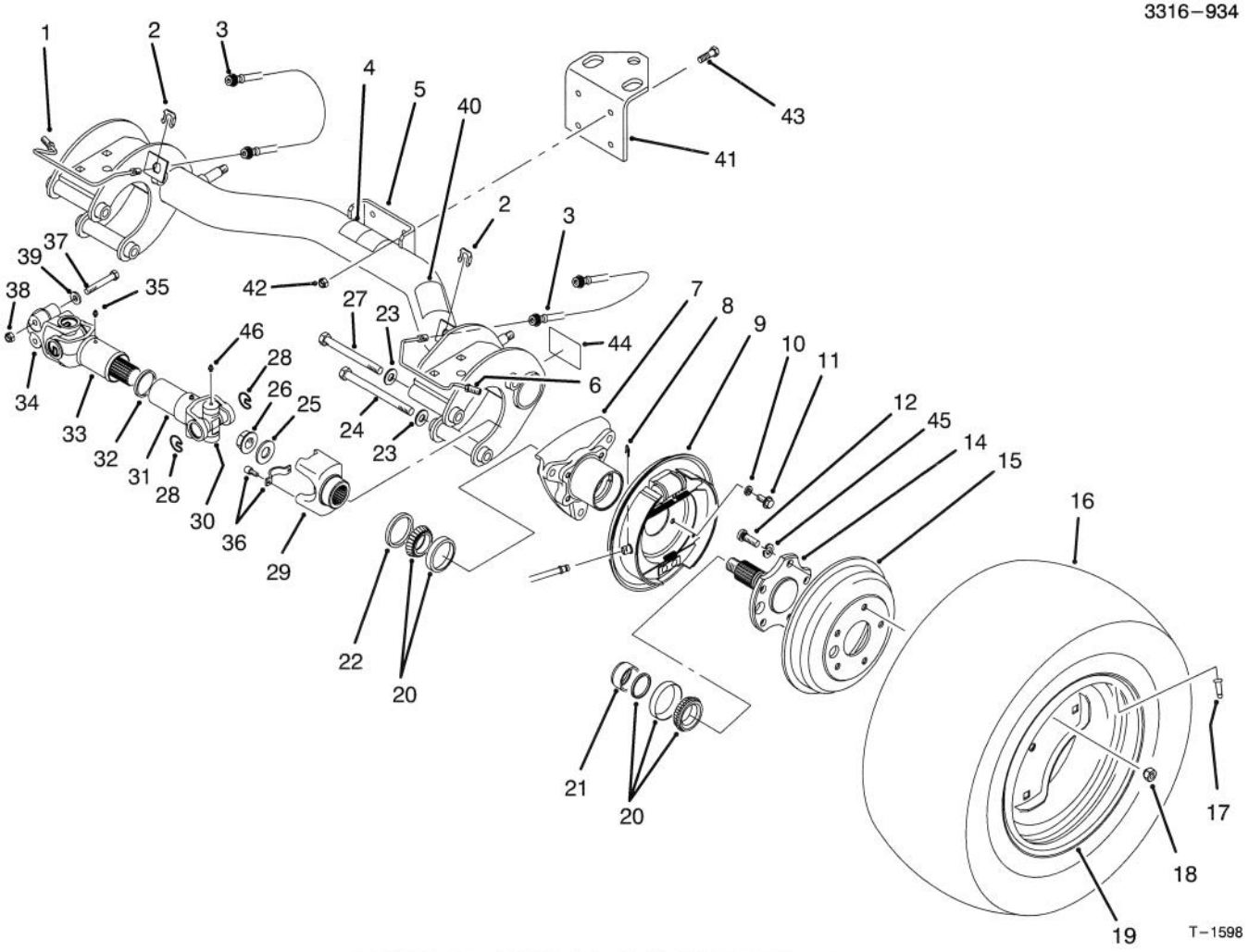

REAR AXLE ASSEMBLY

Ref. No.	Part No.	Description	No. Used
1	87–4090	Tube – Brake RH	1
2	87–3580	Retainer – Brake Hose	2
3	87–4100	Hose – Brake	2
‡4	87–6060	Decal – ATF (US)	1
‡*	93–9442	Decal – ATF (CE)	1
5	87–7110	Assembly – Axle, Rear (Incl. Ref. #4, 40 & 44)	1
6	87–4080	Tube – Brake LH	1
7	87–2240	Housing – Axle	2
8	87–3310	Clip – Brake Cable	2
9	87–3840	Brake Assembly LH	1
*	87–3830	Brake Assembly RH	1
10	3253–21	Washer – Lock	8
11	323–6	Screw – Cap Hex. Hd.	8
12	87–2080	Stud – Drive	10
14	93–7090	Stub – Axle	2
15	87–1840	Drum – Brake	2
16	87–6740	Tire – Rear 24”	2
*	87–3290	Tire – Rear 23” (Optional)	2
17	232–27	Valve – Stem	2
18	23–7270	Nut – Lug	10
19	87–6750	Rim – Rear 24”	2
*	87–3000	Rim – Rear 23” (Optional)	2
20	87–1970	Bearing Matched Set	2

Ref. No.	Part No.	Description	No. Used
21	87–4060	Spacer – Bearing	2
22	87–3590	Seal – Bearing	2
23	87–7270	Washer – Flat	6
24	325–20	Screw – Cap Hex. Hd.	5
25	87–3060	Washer – Flat	2
26	32128–53	Nut – Flange Lock	2
27	325–19	Screw – Cap Hex. Hd.	1
28	92–4188	Ring – Snap	12
29	92–4190	Yoke – End	2
30	92–4187	Cross & Bearing Kit	4
31	92–4182	Yoke & Hub	2
32	92–4180	Seal	2
33	92–4179	Yoke, Shaft & Seal Tube	2
34	92–4177	Yoke – Double Clamp	2
35	302–5	Fitting – Grease	4
36	92–4189	Strap & Bolt Kit	4
37	87–8700	Screw – Cap Hex. Hd.	4
38	32128–36	Nut – Lock	4
39	80–6990	Washer	4
‡40	87–5990	Decal – PTO (US)	1
‡*	93–9862	Decal – PTO (CE)	1
41	92–5951	Angle – Hitch	1
42	3296–39	Nut – Lock	4
43	323–7	Screw – Cap Hex. Hd.	4
‡44	87–9080	Decal – Grease (US)	2
‡*	93–9449	Decal – Grease (CE)	2

*Not Illustrated

‡For different language versions of this part, see International Decal Cross Reference.

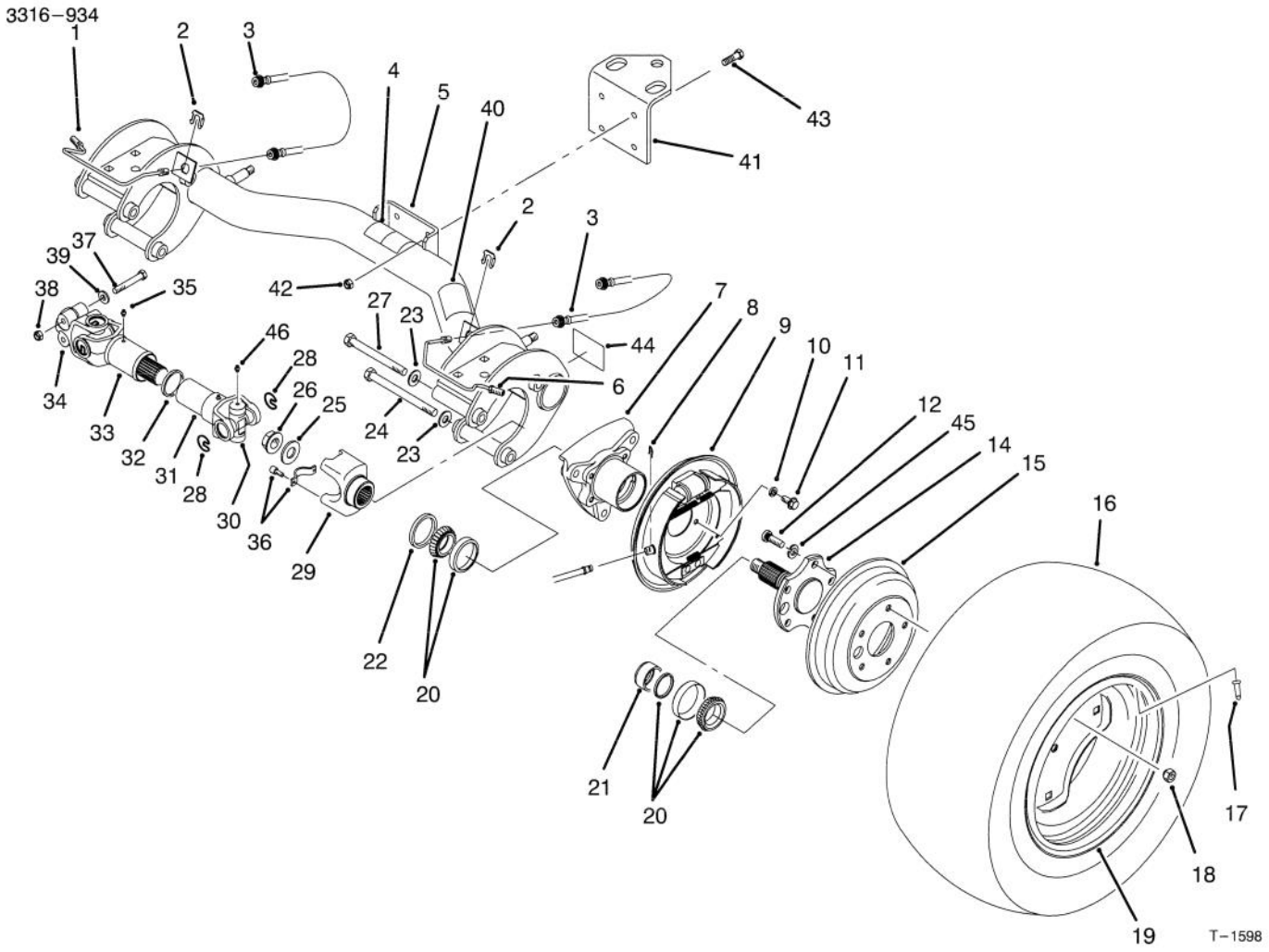

REAR AXLE ASSEMBLY (Continued)

Ref. No.	Part No.	Description	No. Used
45	3253–6	Washer – Lock	10
46	302–58	Fitting – Grease	16
*	93–7124	Driveshaft Assembly (Incl. Ref. #28–36 & 46)	2

Ref. No.	Part No.	Description	No. Used
*	87–5370	Rear Tire & Wheel Assembly (24")	2
*	87–6370	Rear Tire & Wheel Assembly (Optional 23")	2

*Not Illustrated

3316–934

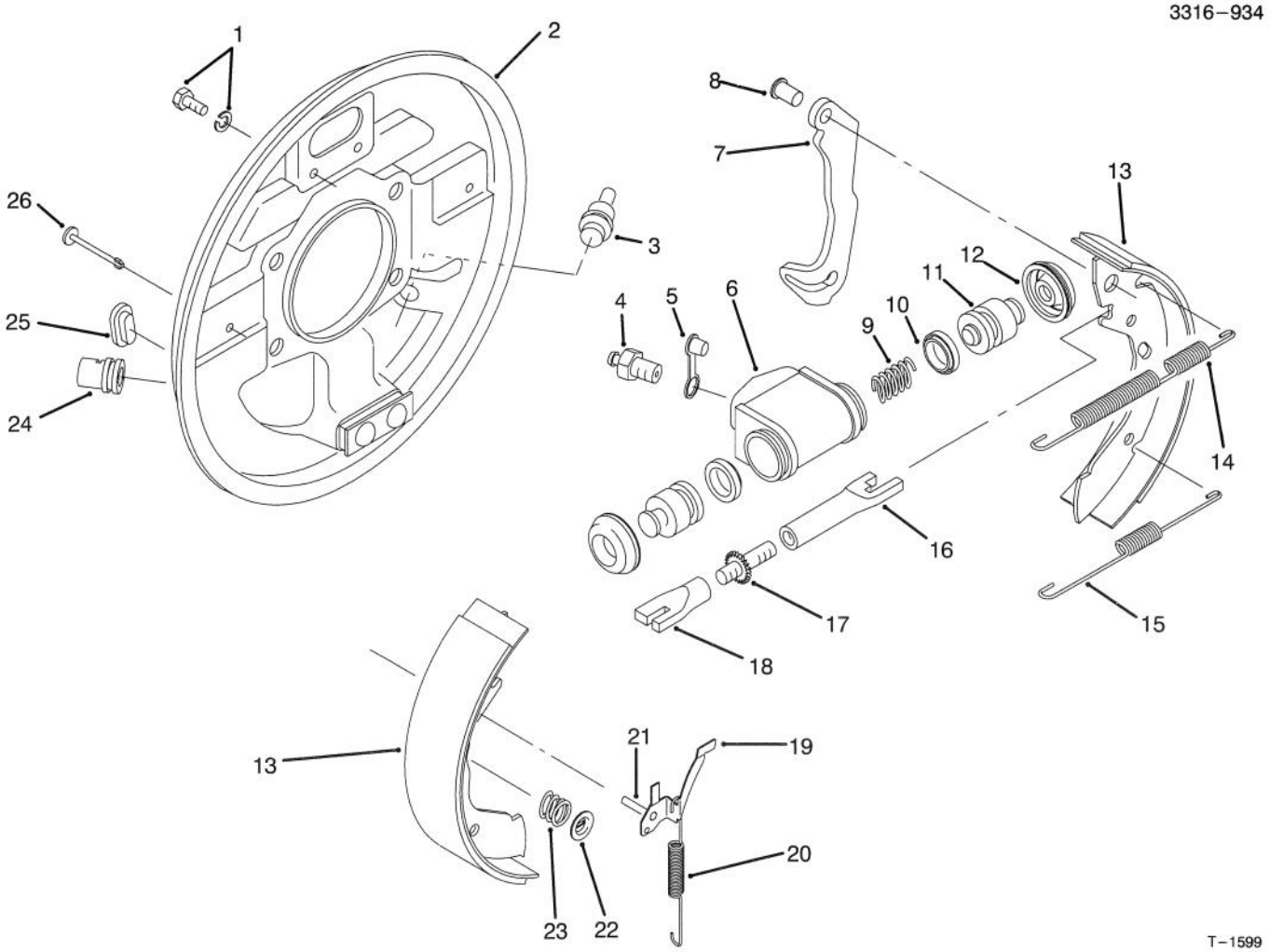

T–1599

REAR BRAKE ASSEMBLY

Ref. No.	Part No.	Description	No. Used
1	92–4135	Set Bolt	2
2	92–4138	Backplate Assembly LH (Incl. Ref. #24)	1
*	92–4139	Backplate Assembly RH (Incl. Ref. #24)	1
3	92–4146	Plug	1
4	92–4137	Screw – Bleed	1
5	92–4114	Cap – Bleed Screw	1
6		Body	1
7		Lever – Operating LH/RH	1
8		Pin	1
9		Spring	1
10		Seal – 'L' Type	2
11		Piston	2
12		Cover – Dust	2
13	92–4143	Shoe & Lining Set (Incl. Ref. #7 & 8)	1
14	92–4147	Spring – Shoe, Upper LH	1
*	92–4148	Spring – Shoe, Upper RH	1
15	92–4149	Spring – Shoe, Lower	1
16		Pushrod – Female LH	1
*		Pushrod – Female RH	1
17		Bolt – Adjuster	1
18		Sleeve – Adjuster	1

Ref. No.	Part No.	Description	No. Used
19	92–4123	Assembly – Pawl LH (Incl. Ref. #21)	1
*	92–4124	Assembly – Pawl RH (Incl. Ref. #21)	1
20	92–4150	Spring – Adjuster, LH	1
*	92–4151	Spring – Adjuster, RH	1
21		Pin – Pawl	1
22	92–4131	Washer – Hold Down	2
23	92–4152	Spring – Hold Down	2
24		Guide – Pipe	1
25	92–4134	Plug – Inspection	1
26	92–4133	Pin – Hold Down	2
*	92–4144	Assembly – Adjuster LH (Inc. Ref. #16–18)	1
*	92–4145	Assembly – Adjuster RH (Incl. Ref. #16–18)	1
*	92–4140	Assy. – Wheel Cylinder LH (Incl. Ref. #4–6 & 9–12)	
*	92–4141	Assy. – Wheel Cylinder RH (Incl. Ref. #4–6 & 9–12)	1
*	92–4142	Seal Kit (Incl. Ref. #10 & 12)	1
*	87–3830	Rear Brake Assembly – RH (Complete)	1
*	87–3840	Rear Brake Assembly – LH (Complete)	1

*Not Illustrated

3316–934

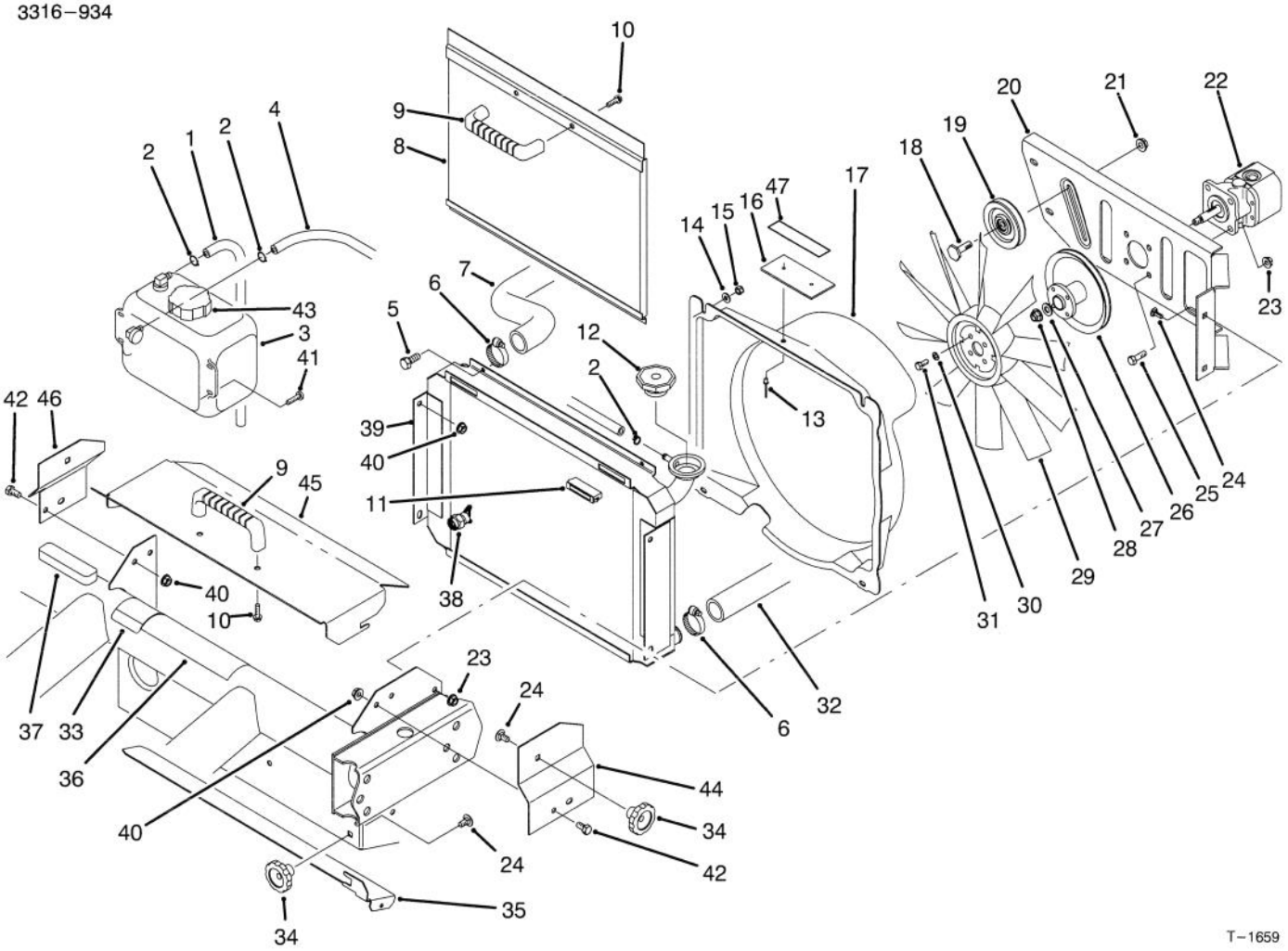

T–1659

RADIATOR & HYDRAULIC PUMP ASSEMBLY

Ref. No.	Part No.	Description	No. Used
1	71–3381	Tube – Overflow	2
2	92–2379	Clamp – Hose	3
3	87–3710	Overflow Reservoir Assembly (Incl. Ref. #43)	1
4	71–3383	Hose – Overflow	1
5	321–4	Screw – Cap Hex. Hd.	4
6	2412–34	Clamp – Hose	2
7	87–7330	Hose – Radiator Upper	1
8	93–7103	Screen – Radiator	1
9	65–5100	Handle	2
10	46–8091	Screw – Hex. Flange Hd.	4
11	58–4250	Magnet	2
12	66–3240	Cap – Radiator	1
13	3290–271	Rivet – Pop	2
14	3256–22	Washer – Flat	4
15	3296–42	Nut – Lock	4
16	76–8750	Plate – Warning	1
17	92–4198	Fan Shroud Assembly (Incl. Ref. #13 & 16)	1
18	32141–86	Screw – Leveler	1
19	63–8140	Pulley	1
20	93–7088	Support – Fan	1
21	3290–357	Nut – Flange Lock	1
22	87–5700	Hydraulic Pump Assembly	1
23	3296–29	Nut – Flange Lock	8
24	3230–23	Bolt – Carriage	7

Ref. No.	Part No.	Description	No. Used
25	322–5	Screw – Cap Hex. Hd.	4
26	93–7137	Pulley	1
27	3256–45	Washer – Flat	1
28	3296–5	Nut – Flange Lock	1
29	84–1880	Fan	1
30	3253–3	Washer – Lock	4
31	321–3	Screw – Cap Hex. Hd.	4
32	87–4150	Hose – Radiator Lower	1
‡33	83–9150	Decal – Starting Fluid (US)	1
‡*	93–7275	Decal – Starting Fluid (CE)	1
34	19–4050	Knob	3
35	87–9300	Door – Clean Out	1
‡36	87–9420	Decal – Caution (US)	1
‡*	93–9447	Decal – Caution (CE)	1
37	87–9810	Foam – Overflow Tank	1
38	92–4111	Petcock – Radiator	1
39	93–7051	Radiator Assembly (Incl. Ref. #38)	1
40	32128–20	Nut – Lock	6
41	3250–20	Screw – Round Hd.	4
42	322–2	Screw – Cap Hex. Hd.	6
43	87–7050	Cap – Reservoir	1
44	93–8938	Bracket – Cover Mount LH	1
45	93–8940	Cover – Radiator	1
46	93–8939	Bracket – Cover Mount RH	1
‡47	93–6681	Decal – Warning (CE)	1

*Not Illustrated

‡For different language versions of this part, see International Decal Cross Reference.

3316–934

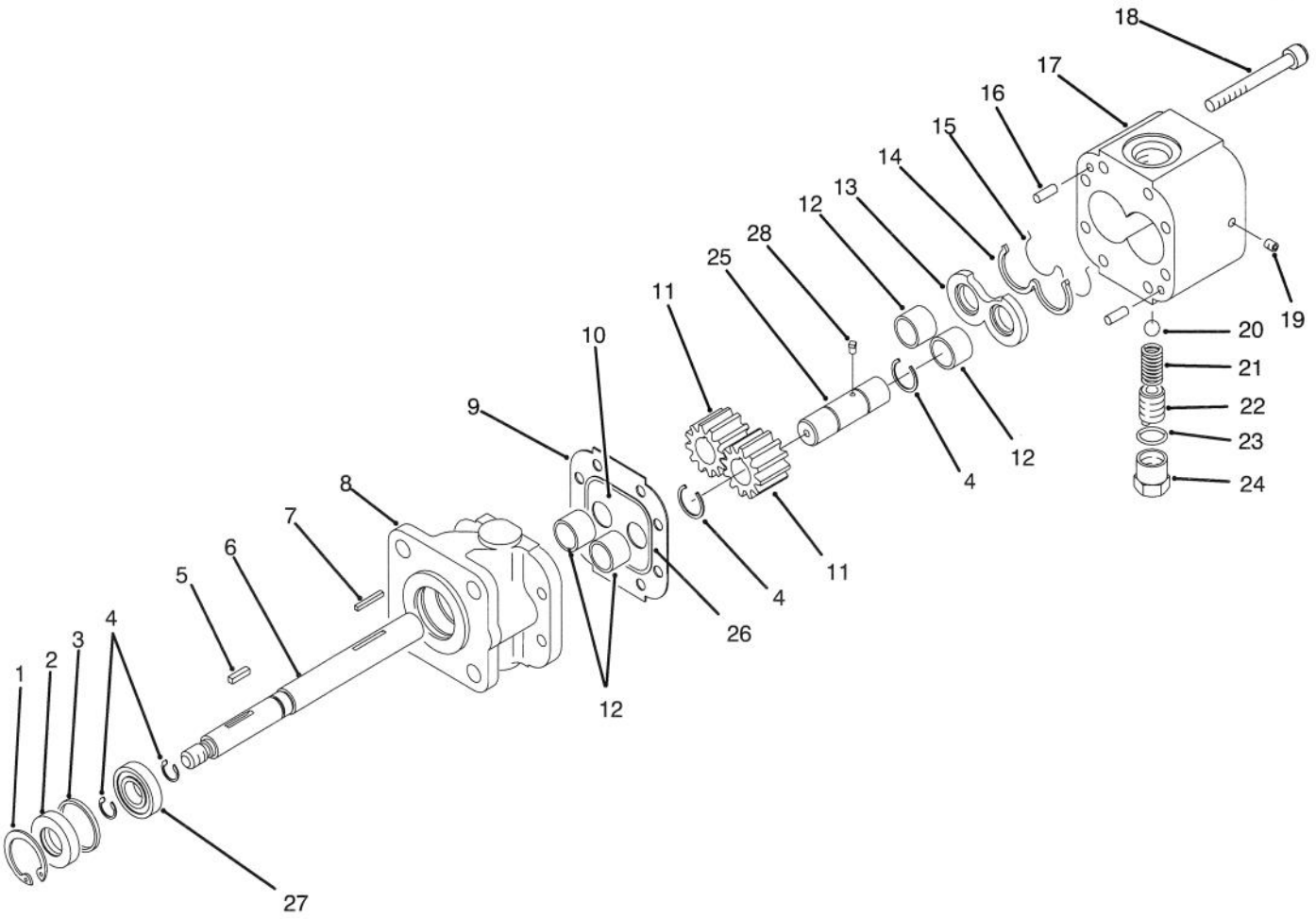

T–1601

HYDRAULIC PUMP ASSEMBLY NO. 87–5700

Ref. No.	Part No.	Description	No. Used
1	32151–41	Ring – Retaining	1
2	92–2195	Seal – Oil	1
3	92–2186	Spacer	1
4	92–2178	Ring – Crescent	4
5	92–2179	Key – Square	1
6	92–2189	Shaft – Drive	1
7	92–2177	Pin – Shear	1
8	92–2188	Stator	1
9	92–2182	Plate – Seal	1
10	92–2183	Plate – Wear	1
11	92–2175	Gear	2
12	92–2192	Bearing	4
13	92–2181	Plate – Pressure	1
14	92–2197	Seal – Back Up	1

Ref. No.	Part No.	Description	No. Used
15	92–2196	Seal – Pressure Plate	1
16	92–2176	Pin – Dowel	2
17	92–2187	Housing – Gear, End	1
18	92–2173	Screw – Cap Socket Head	8
19	92–2185	Plug	1
20	92–2193	Ball	1
21	92–2194	Spring	1
22	92–2174	Screw – Adjusting	1
23	92–2180	Gasket – Copper	1
24	92–2184	Cap – Relief Valve	1
25	92–2190	Shaft – Idler	1
26	92–2198	Seal	1
27	92–2191	Bearing	1
28	92–2199	Key – Ball	1

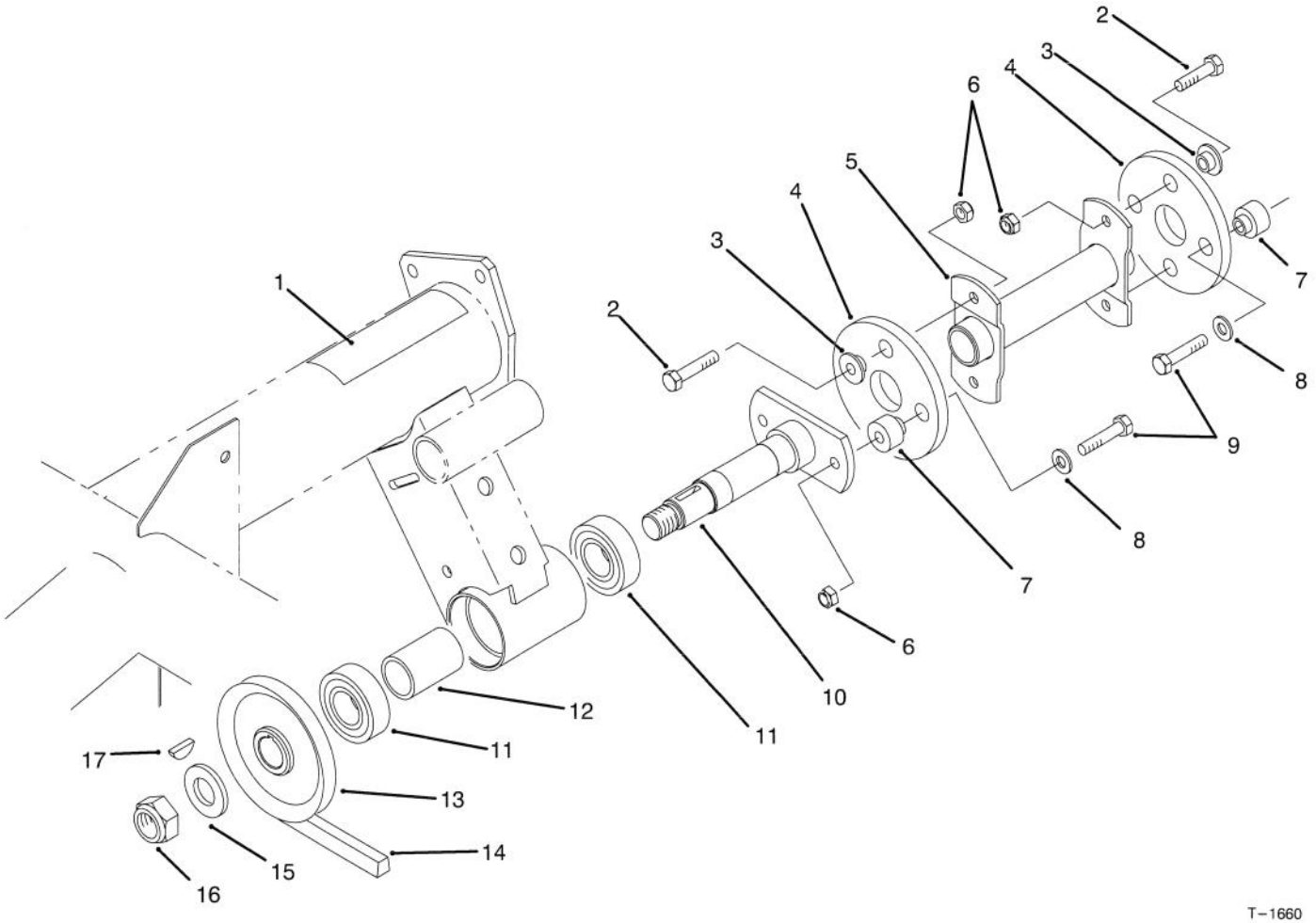

HYDRAULIC PUMP DRIVE ASSEMBLY

Ref. No.	Part No.	Description	No. Used
‡1	80–8040	Decal – Caution (US)	1
‡*	93–7814	Decal – Caution (CE)	1
2	322–5	Screw – Cap Hex. Hd.	4
3	27–6600	Spacer – Thin	4
4	44–2230	Disc – Rubber	2
5	87–4120	Driveshaft	1
6	3296–29	Nut – Lock	6
7	27–6590	Spacer – Thick	4
8	3256–3	Washer – Flat	4

Ref. No.	Part No.	Description	No. Used
9	322–7	Screw – Cap Hex. Hd.	4
10	87–2720	Driveshaft	1
11	251–82	Bearing – Ball	2
12	87–2750	Spacer – Bearing	1
13	87–3370	Pulley	1
14	93–7140	Belt – V	1
15	3256–28	Washer – Flat	1
16	3296–15	Nut – Lock	1
17	3257–7	Key – Woodruff	1

*Not Illustrated

‡For different language versions of this part, see International Decal Cross Reference.

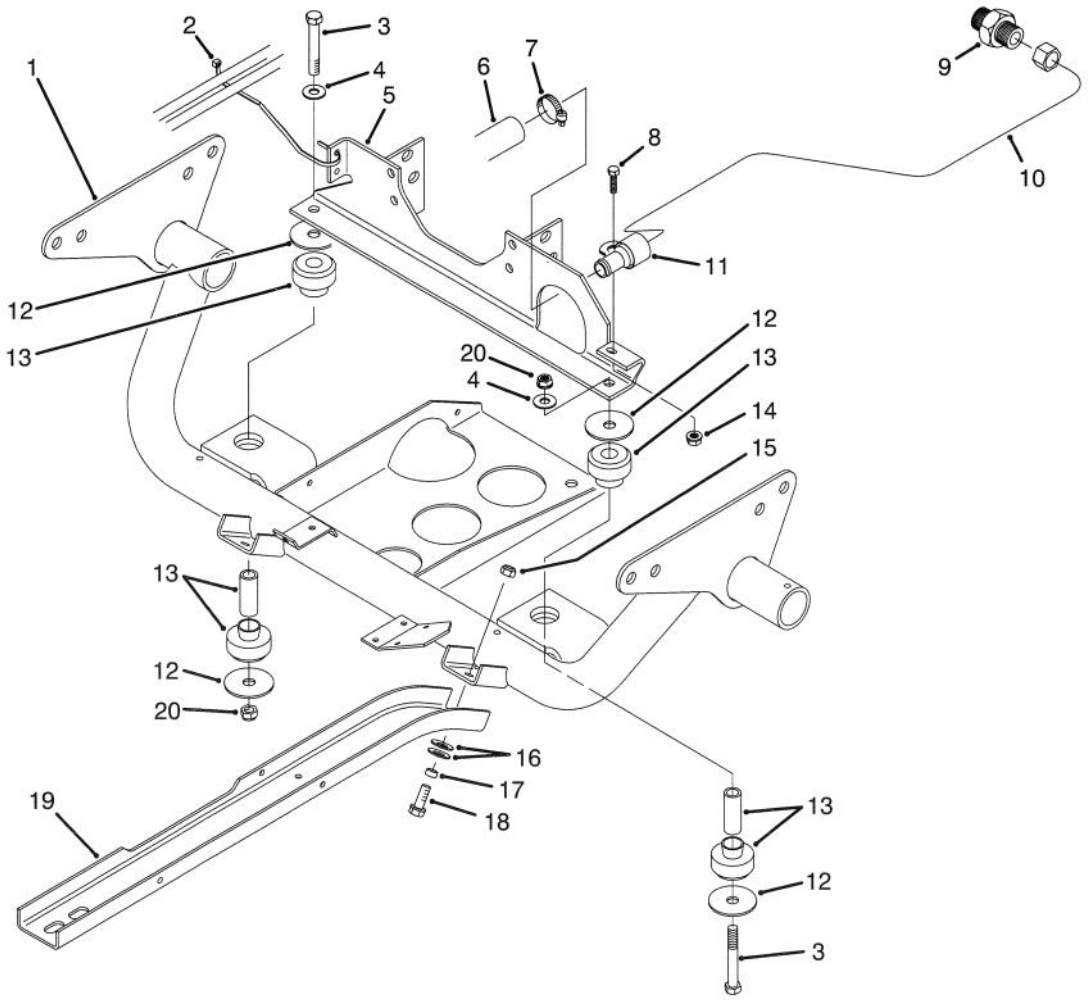

T–1661

ENGINE FRAME ASSEMBLY

Ref. No.	Part No.	Description	No. Used
1	93–7099	Frame – Engine	1
2	3290–378	Tie – Cable	1
3	324–12	Screw – Cap Hex. Hd.	2
4	3256–25	Washer – Flat	2
5	93–7100	Mount – Engine	1
6	87–7350	Hose – Suction	1
7	2412–34	Clamp – Hose	1
8	321–4	Screw – Cap Hex. Hd.	1
9	87–7290	Fitting – Hydraulic	1
10	87–6900	Tube – Hydraulic	1

Ref. No.	Part No.	Description	No. Used
11	2412–106	Clamp – R	1
12	87–5100	Washer – Flat	4
13	87–4970	Engine Mount Assembly	2
14	32128–33	Nut – Flange	1
15	3296–39	Nut – Lock	6
16	3290–413	Washer – Belleville	12
17	76–9100	Spacer	6
18	3234–11	Screw – Cap Hex. Hd.	6
19	87–4730	Guard – Belly	2
20	3296–48	Nut – Lock	2

3316–934

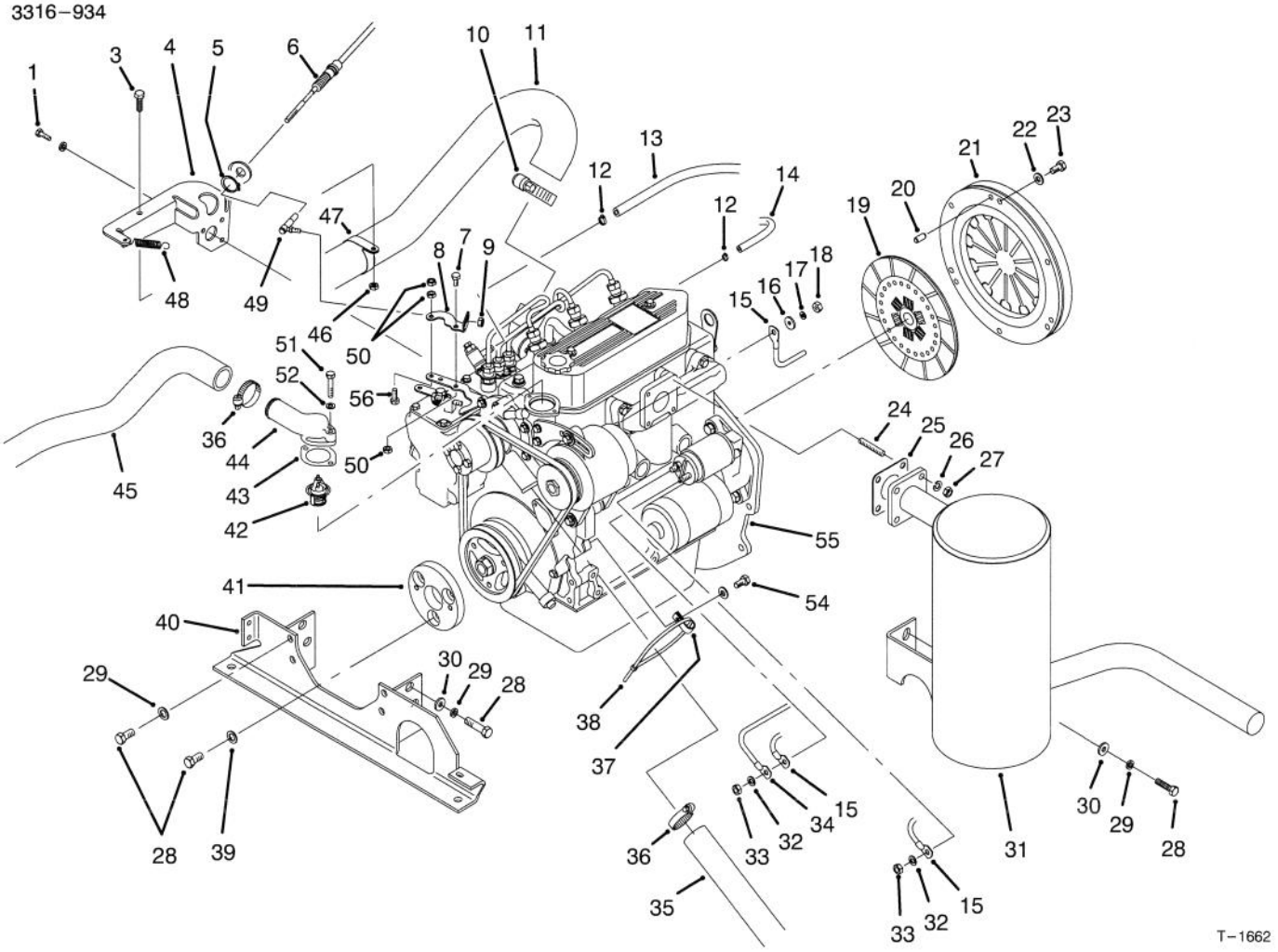

ENGINE INSTALLATION ASSEMBLY

Ref. No.	Part No.	Description	No. Used
1	42–9440	Screw – Cap Hex. Hd.	3
3	322–3	Screw – Cap Hex. Hd.	1
4	87–5870	Bracket – Cable	1
5	32120–47	Ring – Retaining	1
6	93–7097	Cable – Accelerator	1
7	321–2	Screw – Cap Hex. Hd.	1
8	87–7440	Plate – Throttle	1
9	3296–3	Nut – Lock	1
10	2412–92	Clamp – Hose	1
11	87–4050	Hose – Air Intake	1
12	2412–108	Clamp – Hose	2
13	27–5360	Hose – Fuel	1
14	75–4706	Hose	1
15	93–7130	Harness – Wire	1
16	5–3637	Washer – Flat	1
17	43–5920	Washer – Lock	1
18	48–7880	Nut – Lock	1
19	87–4700	Disc – Clutch	1
20	51–5610	Pin – Alignment	3
21	87–4690	Cover – Clutch	1
22	3253–4	Washer – Lock	6
23	48–7700	Screw – Cap Hex. Hd.	6
24	42–9570	Stud – Muffler	4
25	42–9110	Gasket – Muffler	1
26	42–9850	Washer – Lock	4
27	48–7930	Nut	4
28	63–7790	Screw – Cap Hex. Hd.	12

Ref. No.	Part No.	Description	No. Used
29	48–9590	Washer – Lock	10
30	3256–25	Washer	6
31	93–7102	Muffler	1
32	3254–2	Washer – Lock	2
33	42–9580	Nut – Lock	2
34	87–3070	Cable – Battery Pos.	1
35	87–4150	Hose – Radiator Lower	1
36	2412–34	Clamp	2
37	2412–149	Clamp – R	1
38	3290–379	Tie – Cable	1
39	36–4790	Washer – Thrust	3
40	93–7100	Mount – Engine	1
41	87–4110	Puck – Engine Adapter	1
42	93–8974	Thermostat	1
43	64–4430	Gasket – Thermostat	1
44	87–3410	Housing – Thermostat	1
45	87–7330	Hose – Radiator Upper	1
46	3296–29	Nut – Lock	1
47	2412–107	Clamp – R	1
48	67–1450	Spring	1
49	18–1720	Joint – Ball	1
50	3296–56	Nut – Lock	3
51	48–7660	Screw – Cap Hex. Hd.	2
52	48–8010	Washer – Lock	2
54	42–9440	Bolt & Washer	1
55	87–8840	Engine	1
56	321–5	Screw – Cap Hex. Hd.	1

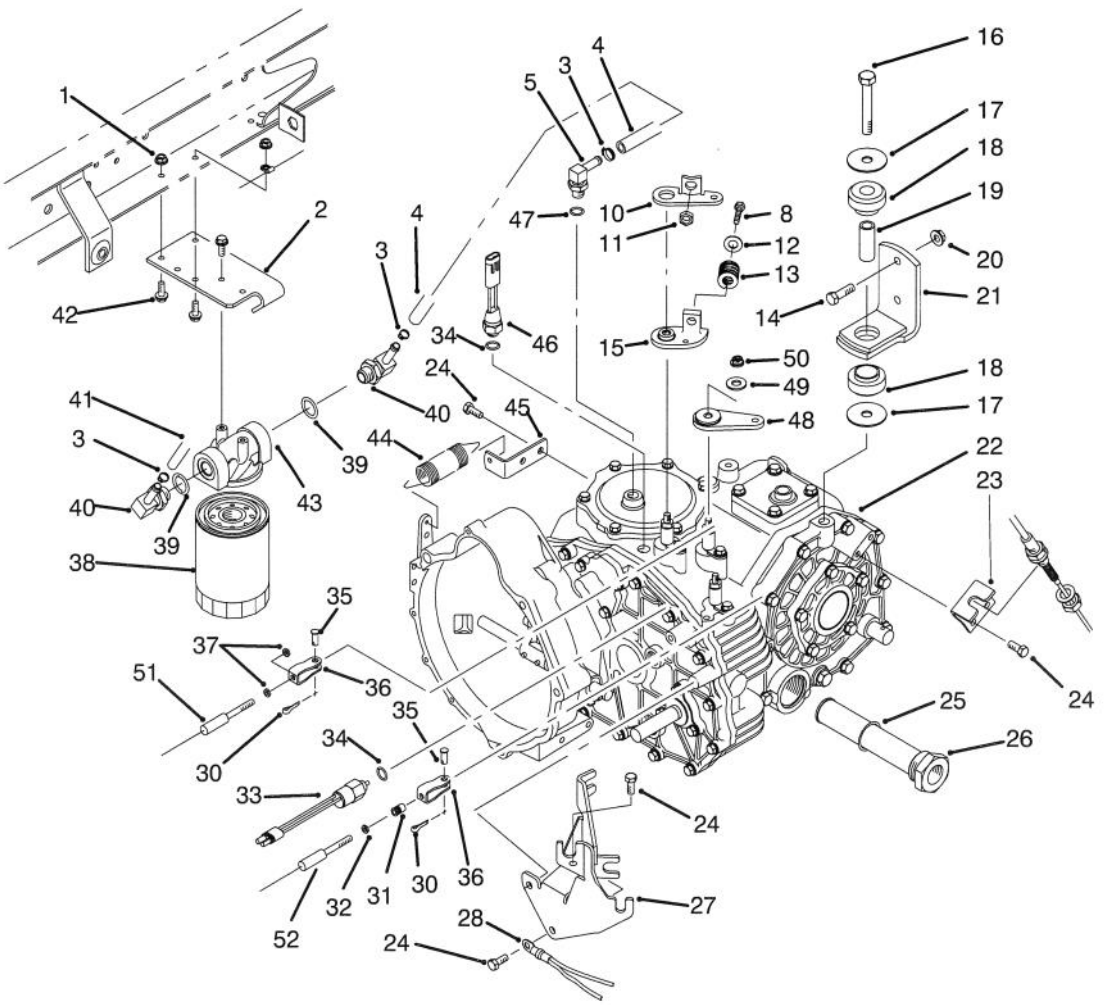

TRANSAXLE INSTALLATION ASSEMBLY

Ref. No.	Part No.	Description	No. Used
1	32128–33	Nut – Flange Lock	1
2	87–7040	Bracket – Oil Filter	1
3	2412–36	Clamp – Hose	3
4	87–5730	Hose – Hydraulic	1
5	354–135	Fitting – Hydraulic 90° (Incl. Ref. #47)	1
8	323–10	Screw – Cap Hex. Hd.	1
10	87–8250	Plate – Shift Arm	1
11	32128–21	Nut – Lock	1
12	3256–4	Washer – Flat	1
13	87–6910	Spring – Compression	1
14	323–7	Screw – Cap Hex. Hd.	4
15	87–7970	Arm – Shift	1
16	3215–1	Screw – Cap Hex. Hd.	1
17	87–5100	Washer	4
18	87–4970	Transaxle Mount Assembly (Incl. Ref. #19)	2
19		Spacer – Mount	2
20	3296–39	Nut – Flange Lock	4
21	87–5800	Bracket – Mount	2
22	87–9530	Transaxle Assembly	1
23	87–4470	Bracket	1
24	66–3160	Screw – Cap Hex. Hd.	7
25	237–123	Seal – O–Ring	1
26	87–3990	Oil Strainer Assembly (Incl. Ref. #25)	1

Ref. No.	Part No.	Description	No. Used
27	87–4820	Bracket – Cable	1
28	237–81	Seal – O–Ring	1
29	253–987	Fitting – Hydraulic 90° (Incl. Ref. #28)	1
30	3272–6	Pin – Cotter	3
31	32148–15	Nut – Clinch	1
32	3219–14	Nut – Hex.	1
33	87–6710	Switch – Supervisor	1
34	237–30	Seal – O–Ring	2
35	283–62	Pin – Clevis	3
36	87–2310	Clevis – Cable	3
37	3220–1	Nut – Jam	4
38	54–0110	Element – Oil Filter	1
39	237–79	Seal – O–Ring	2
40	354–134	Fitting – Hydraulic 90° (Incl. Ref. #39)	2
41	87–4920	Hose – Hydraulic	1
42	3234–4	Screw – Hex. Flange Hd.	4
43	87–8780	Head – Oil Filter	1
44	68–9950	Spring – Extension	1
45	87–7170	Bracket – Clutch Spring	1
46	72–4310	Switch – Ball N.C.	1
47	237–42	Seal – O–Ring	1
48	87–7960	Lever – Shift Arm	2
49	80–6990	Washer – Flat	3
50	48–9520	Nut – Lock	3

3316–934

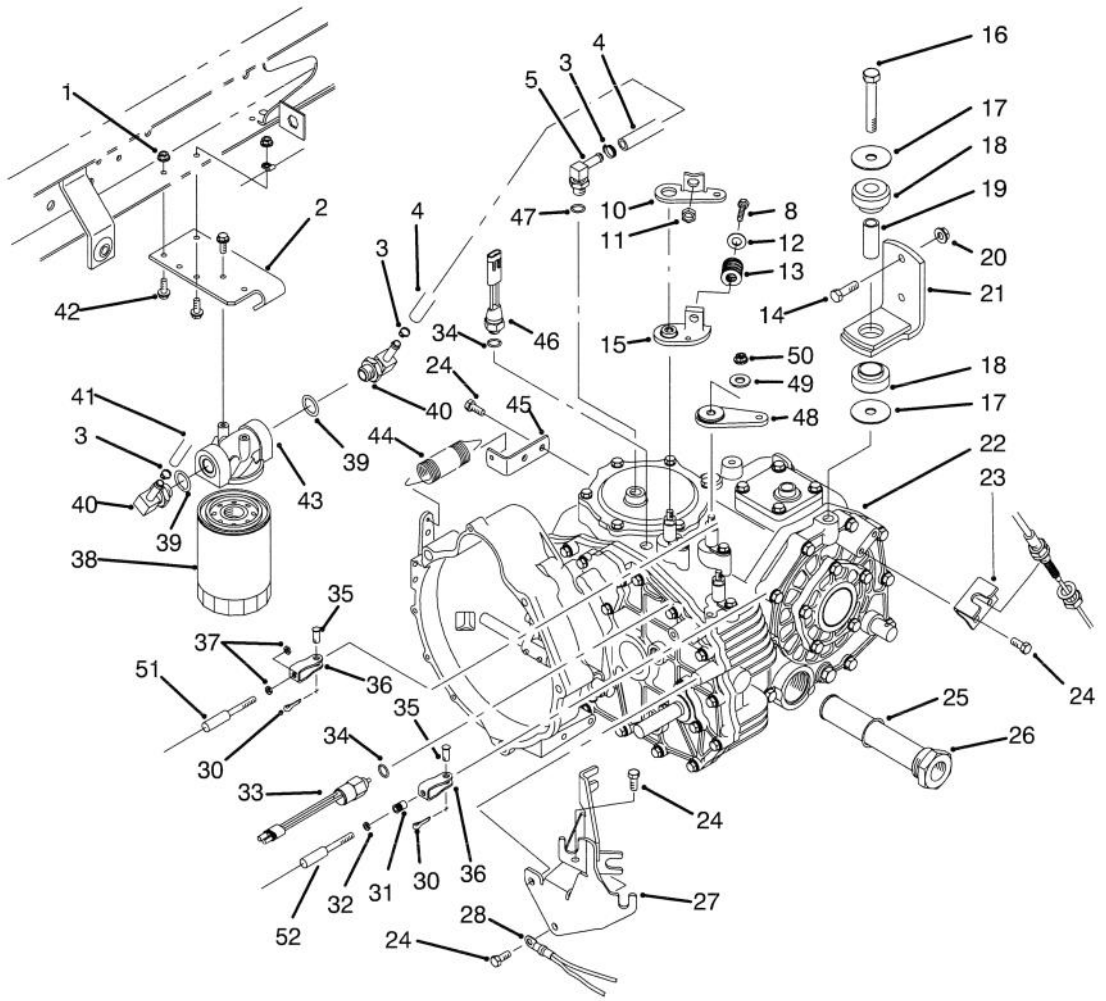

T–2000

TRANSAXLE INSTALLATION ASSEMBLY (Continued)

Ref. No.	Part No.	Description	No. Used
51	87–4260	Shift Cable Assembly (Incl. Ref. #37)	2
52	87–4420	Hi–Lo Cable Assembly (Incl. Ref. #32)	1

Ref. No.	Part No.	Description	No. Used
53	2412–34	Clamp – Hose	1
54	87–3670	Hose – Hydraulic	1

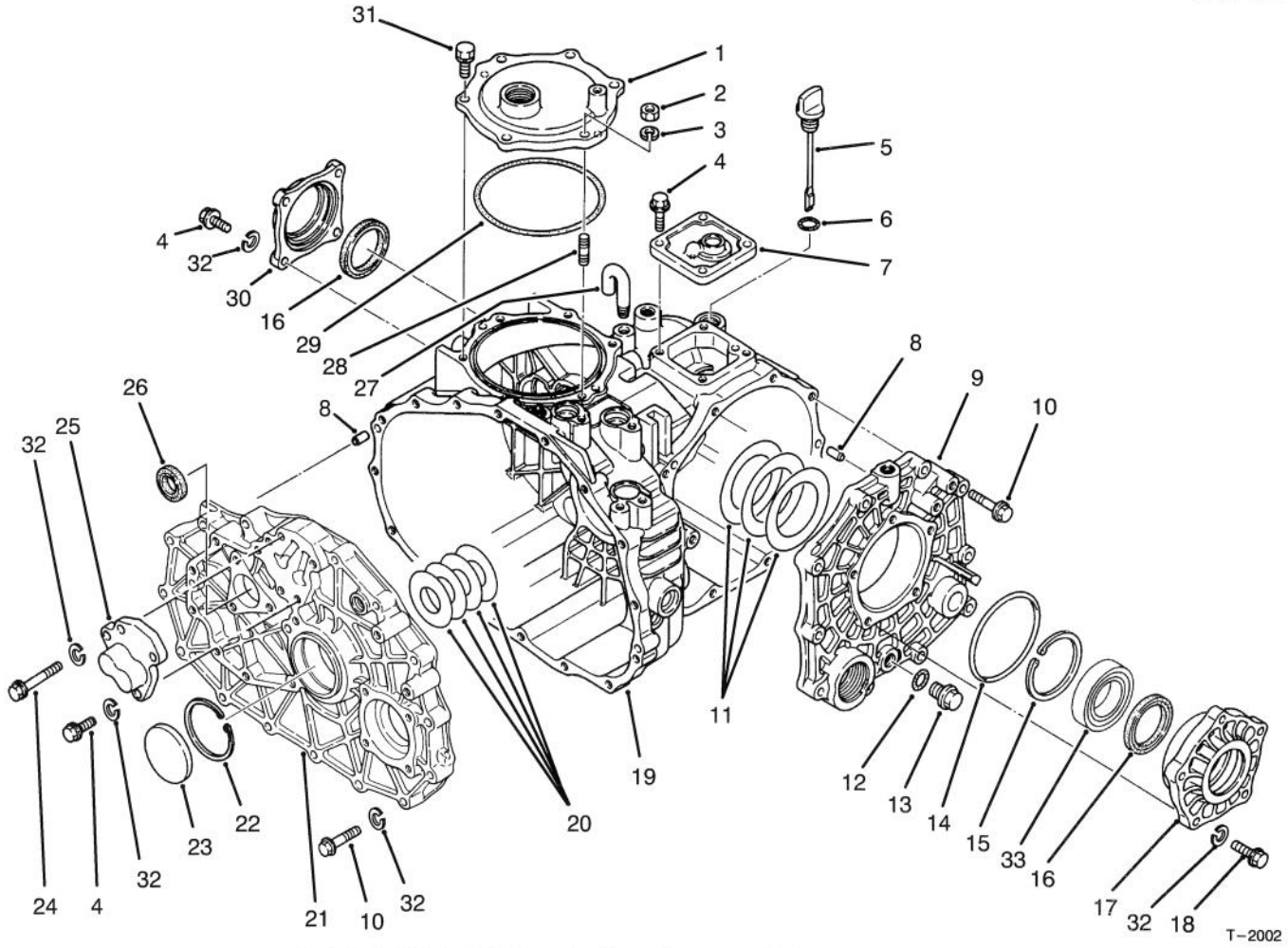

TRANSAXLE CASE ASSEMBLY

Ref. No.	Part No.	Description	No. Used
1	92–0656	Cover – P.T.O.	1
2	48–7930	Nut – Hex.	1
3	92–0762	Washer – Lock	1
4	60–6750	Screw – Cap Hex. Hd.	11
5	92–0662	Cap – Oil	1
6	92–0788	O–Ring	1
7	92–0652	Cover – Upper	1
8	92–0765	Pin – Alignment	4
9	92–0653	Cover – Side	1
10	42–9530	Screw – Cap Hex. Hd.	25
11	92–0809	Shim Set	1
12	92–0787	O–Ring	1
13	92–0773	Drain Plug Assembly (Incl. Ref. #12)	1
14	92–0789	O–Ring	1
15	92–0760	Ring – Retaining	1
16	92–0793	Seal – Oil	2

Ref. No.	Part No.	Description	No. Used
17	92–0654	Carrier – Differential	1
18	48–7730	Screw – Cap Hex. Hd.	5
19	92–0651	Case – Transaxle	1
20	92–0808	Shim Set	1
21	92–5180	Plate – Center	1
22	92–0759	Ring – Retaining	1
23	92–0807	Cap – Sealing	1
24	48–7560	Screw – Cap Hex. Hd.	1
25	92–0706	Cap – Fork Shaft	1
26	92–0791	Seal – Oil	1
27	92–0743	Breather – Air	1
28	92–0804	Stud	1
29	92–0790	O–Ring	1
30	92–0655	Cover – Seal	1
31	92–0796	Screw – Cap Hex. Hd.	5
32	42–9850	Washer – Lock	42
33	92–0775	Bearing – Ball	2

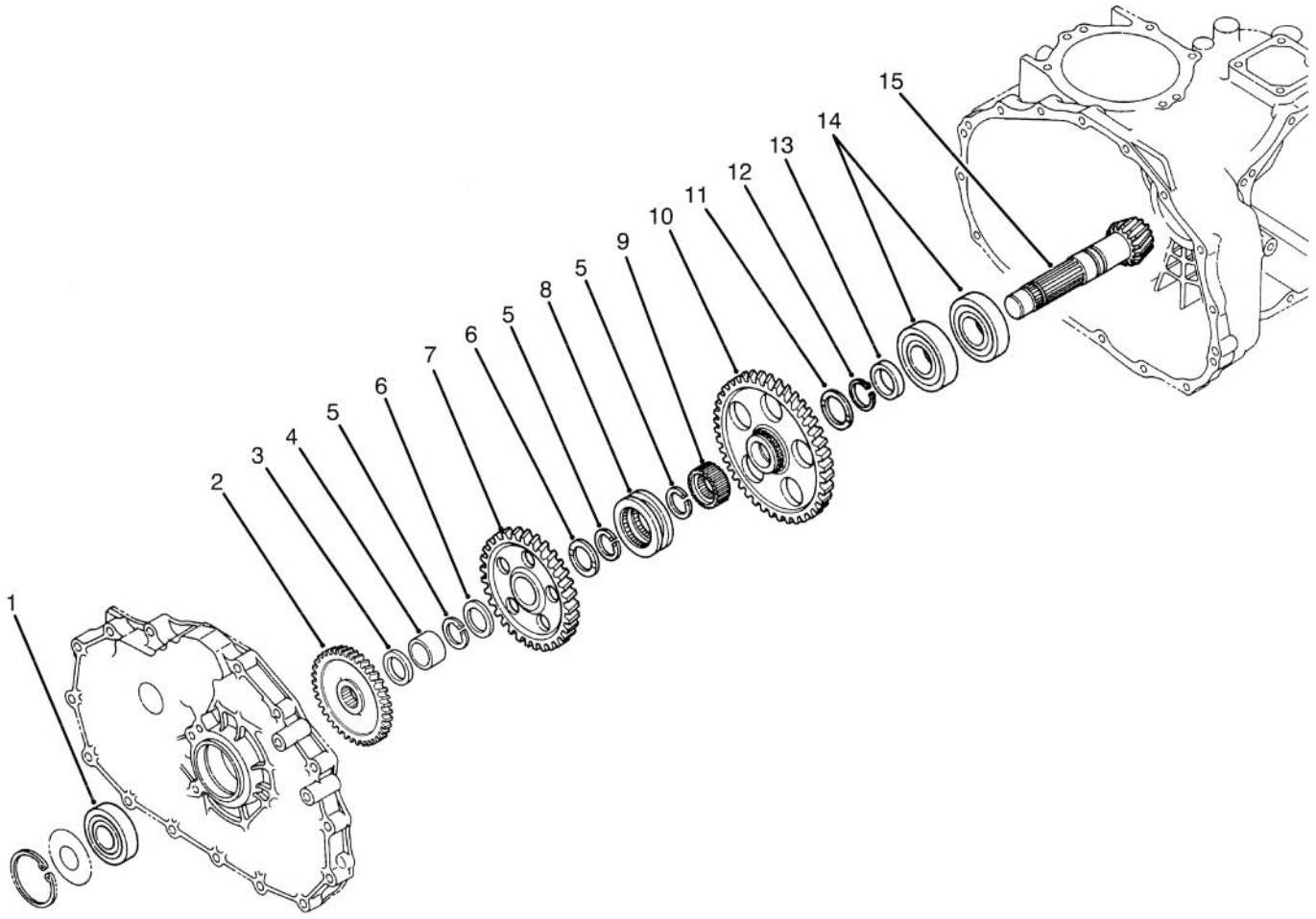

T–2003

COUNTERSHAFT ASSEMBLY

Ref. No.	Part No.	Description	No. Used
1	92–0712	Bearing – Ball	1
2	92–5186	Gear – 43T	1
3	92–0716	Collar	1
4	92–0783	Sleeve – Inner	1
5	92–0764	Ring – Retaining	3
6	92–0711	Washer – Thrust	2
7	92–0715	Gear – 49T	1
8	92–0718	Shifter – Hi–Lo	1

Ref. No.	Part No.	Description	No. Used
9	92–0719	Collar – Spline	1
10	92–0717	Gear – 71T	1
11	92–0741	Washer – Thrust	1
12	92–0755	Ring – Retaining	1
13	92–0713	Collar	1
14	92–0714	Bearing – Ball	2
15	92–0710	Counter Shaft Assembly (Incl. Ring Gear)	1

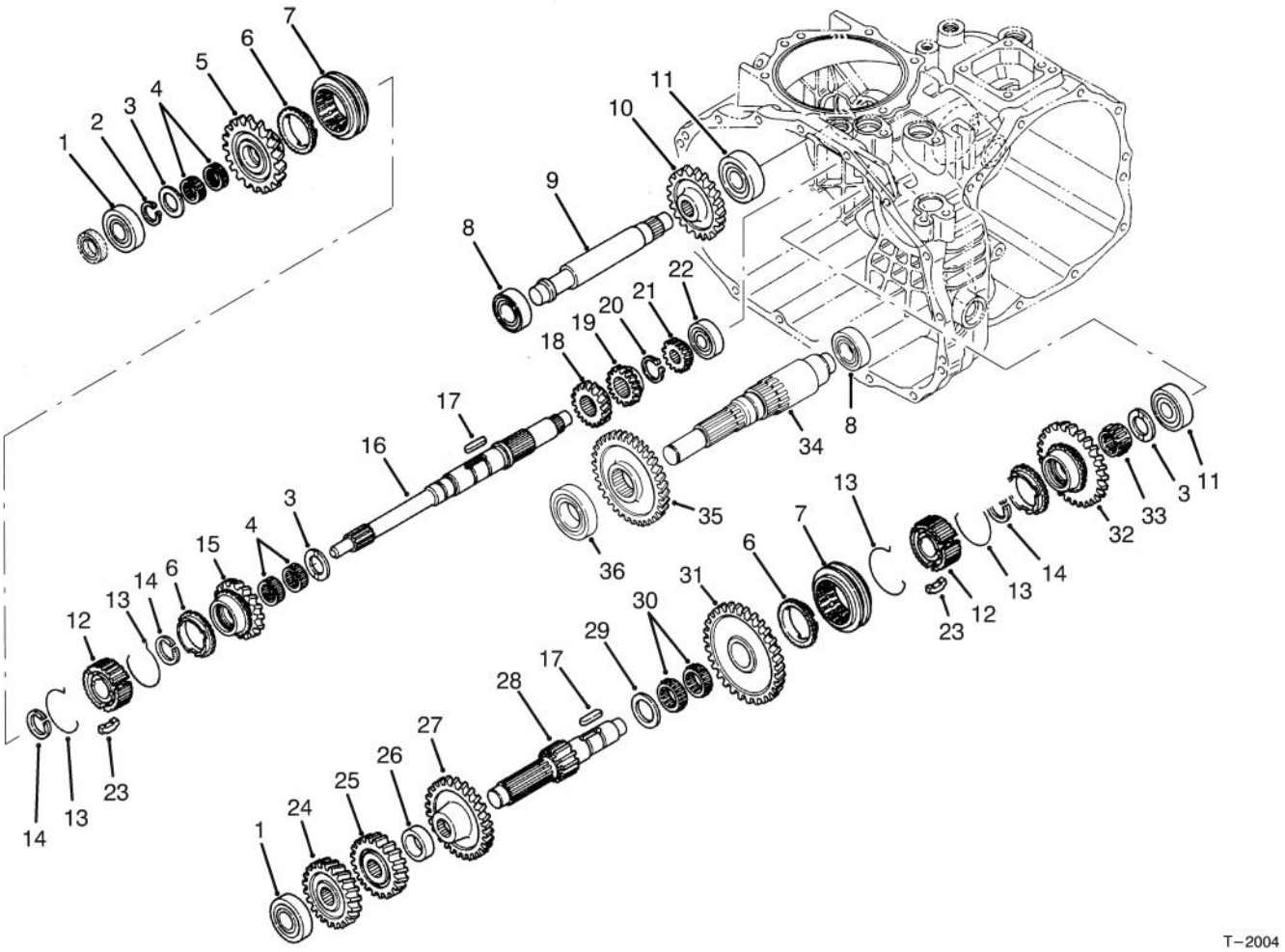

T–2004

TRANSAXLE GEAR SHAFTS ASSEMBLY

Ref. No.	Part No.	Description	No. Used
1	251–8	Bearing – Ball	2
2	92–0753	Ring – Retaining	1
3	92–0740	Washer – Thrust	3
4	92–0781	Bearing – Needle	4
5	92–0820	Gear – 27T	1
6	92–0667	Ring – Synchro	3
7	92–0668	Shifter – Synchro	2
8	251–346	Bearing – Ball	2
9	92–0824	Shaft – Reverse Idler	1
10	92–0684	Gear – 33T	1
11	92–0778	Bearing – Ball	2
12	92–0664	Hub – Synchro	2
13	92–0666	Spring – Synchro	4
14	92–0763	Ring – Retaining	3
15	92–0821	Gear – 24T	1
16	92–0663	Shaft – Main	1
17	92–0772	Key	2
18	92–0687	Gear – 16T	1

Ref. No.	Part No.	Description	No. Used
19	92–0672	Gear – 18T	1
20	92–0754	Ring – Retaining	1
21	92–0673	Gear – 14T	1
22	92–0650	Bearing – Ball	1
23	92–0665	Key – Synchro	6
24	92–0822	Gear – 28T	1
25	92–0679	Gear – 23T	1
26	92–0680	Collar	1
27	92–0823	Gear – 43T	1
28	92–0674	Shaft – Reduction	1
29	92–0682	Washer – Thrust	1
30	92–0681	Bearing – Needle	2
31	92–0677	Gear – 49T	1
32	92–0819	Gear – 40T	1
33	92–0782	Bearing – Needle	1
34	92–5183	Shaft – Front Drive	1
35	92–5184	Gear – 41T	1
36	92–5185	Bearing – Ball	1

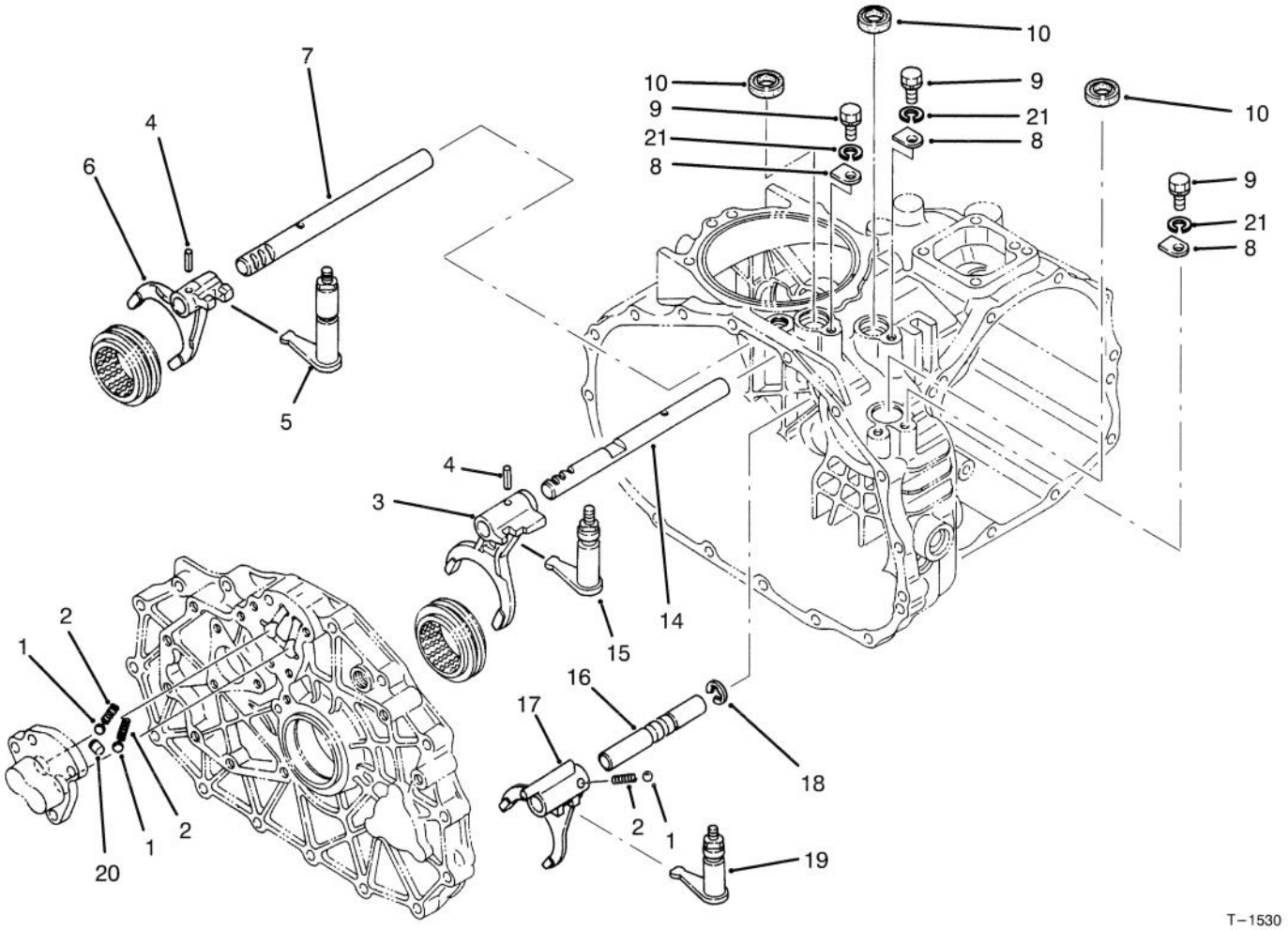

SHIFT FORK ASSEMBLY

Ref. No.	Part No.	Description	No. Used
1	92–0785	Ball	3
2	92–0731	Spring – Compression	3
3	92–0700	Fork – Shift R–1	1
4	92–0769	Pin – Spring	2
5	92–0817	Arm – Shift Fork 2–3	1
6	92–0701	Fork – Shift 2–3	1
7	92–0699	Shaft – Fork 2–3	1
8	92–0732	Plate – Keeper	3
9	48–7700	Screw – Cap Hex. Hd.	3

Ref. No.	Part No.	Description	No. Used
10	92–0729	Seal – Oil	3
14	92–0698	Shaft – Fork R–1	1
15	92–0816	Arm – Shift Fork R–1	1
16	92–0708	Shaft – Fork Hi–Lo	1
17	92–0709	Fork – Shift Hi–Lo	1
18	92–0761	Ring – Retaining	1
19	92–0818	Arm – Shift Fork Hi–Lo	1
20	92–0705	Lock – Spindle	1
21	42–9850	Washer – Lock	3

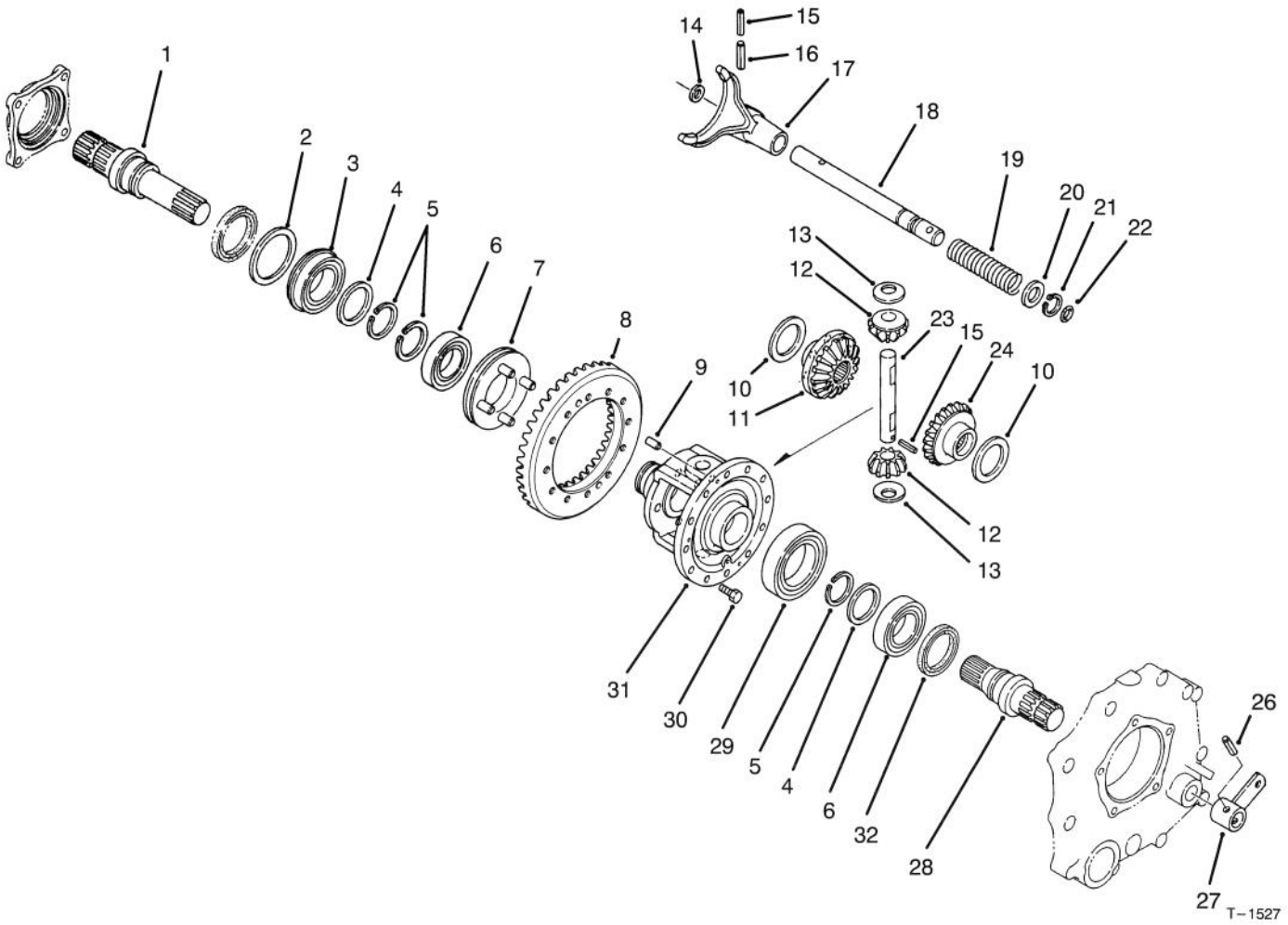

DIFFERENTIAL GEAR ASSEMBLY

Ref. No.	Part No.	Description	No. Used
1	92–0726	Shaft – Axle R.H.	1
2	92–0728	Washer	1
3	92–0780	Bearing – Ball	1
4	92–0727	Washer	2
5	92–0756	Ring – Retaining	3
6	92–0775	Bearing – Ball	2
7	92–0730	Slider – Differential Lock	1
8	92–0710	Ring Gear Assembly (Incl. Counter Shaft)	1
9	92–0765	Pin – Alignment	2
10	92–0747	Washer – Thrust	2
11	92–0746	Gear – Side R.H.	1
12	92–0748	Gear – Pinion	2
13	92–0750	Washer	2
14	92–0744	Washer	1
15	92–0768	Pin – Spring	2

Ref. No.	Part No.	Description	No. Used
16	92–0771	Pin – Spring	1
17	92–0721	Fork – Differential Lock	1
18	92–0722	Shaft – Lock Fork	1
19	92–0723	Spring – Compression	1
20	92–0733	Washer	1
21	92–0753	Ring – Retaining	1
22	92–0787	O–Ring	1
23	92–0749	Shaft – Pinion	1
24	92–0745	Gear – Side L.H.	1
26	92–0770	Pin – Spring	1
27	92–0724	Arm – Differential Lock	1
28	92–0725	Shaft – Axle L.H.	1
29	92–0776	Bearing – Ball	1
30	92–0803	Screw – Hex. Flange Hd.	12
31	92–0720	Case – Differential	1
32	92–0793	Seal – Oil	2

3316–934

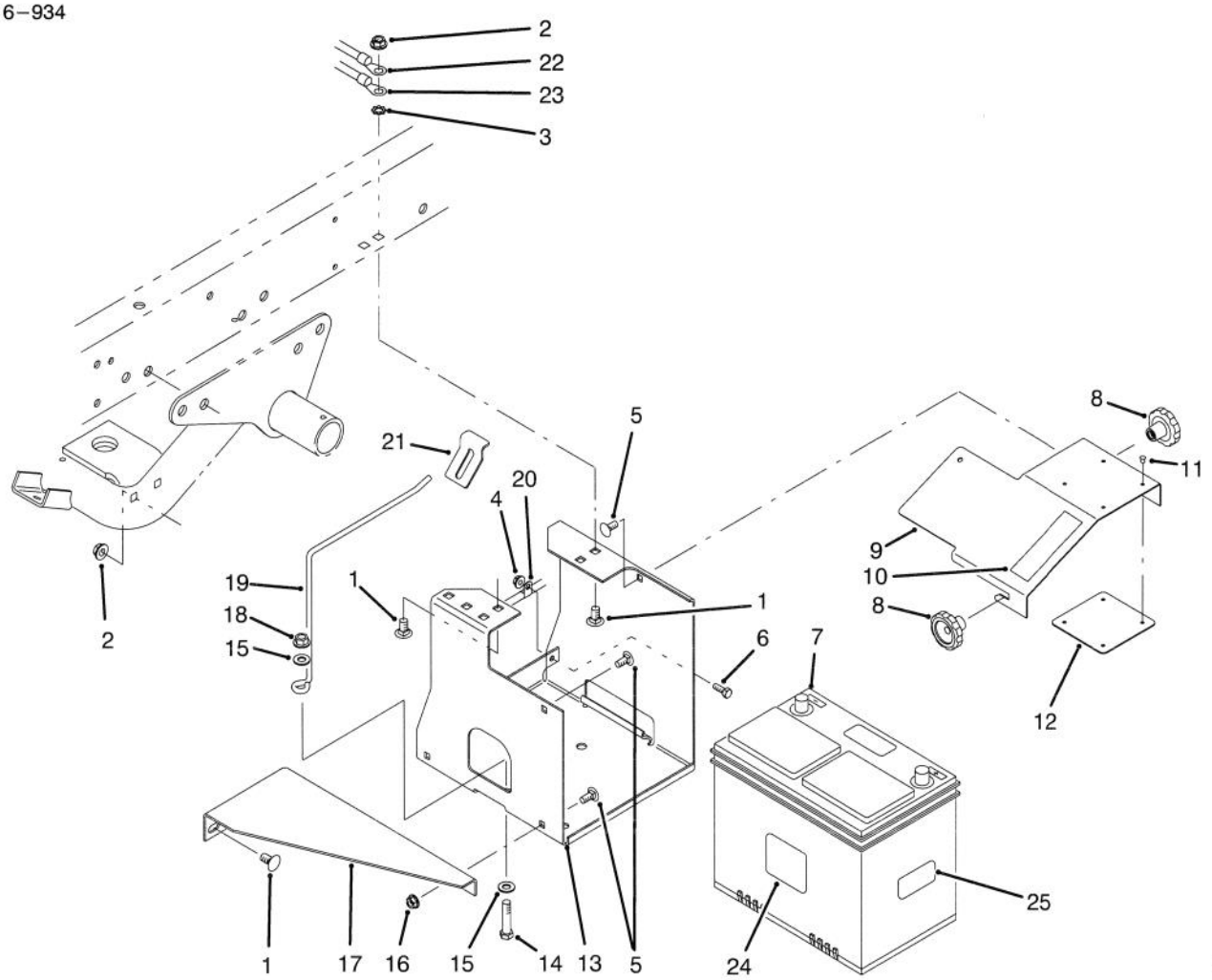

T–2014

BATTERY MOUNT ASSEMBLY

Ref. No.	Part No.	Description	No. Used
1	3231–21	Bolt – Carriage	6
2	3290–357	Nut – Flange Lock	6
3	3255–9	Washer – Lock ETLW	1
4	32128–33	Nut – Flange Lock	1
5	3230–23	Bolt – Carriage	4
6	321–4	Screw – Cap Hex. Hd.	1
7	63–9230	Battery	1
8	19–4050	Knob	2
9	87–5130	Cover – Battery Base	1
‡10	36–3400	Decal – No Step (US)	1
‡*	93–6687	Decal – No Step (CE)	1
11	3296–27	Rivet – Plastic	4
12	87–7620	Shield – Plastic	1

Ref. No.	Part No.	Description	No. Used
13	87–5120	Bracket – Battery Base	1
14	323–9	Screw – Cap Hex. Hd.	1
15	3256–24	Washer – Flat	2
16	32128–20	Nut – Flange Lock	2
17	87–5110	Support – Lower	1
18	3296–39	Nut – Flange Lock	1
19	87–7600	Rod – Battery Support	1
20	2412–89	Clamp – R	1
21	87–7610	Tab – Battery Support	1
22	87–4250	Harness – Wire Rear	1
23	87–3080	Cable – Battery Neg.	1
24	93–6668	Decal – Charging (CE)	1
25	93–7276	Decal – Danger (CE)	1

*Not Illustrated

‡For different language versions of this part, see International Decal Cross Reference.

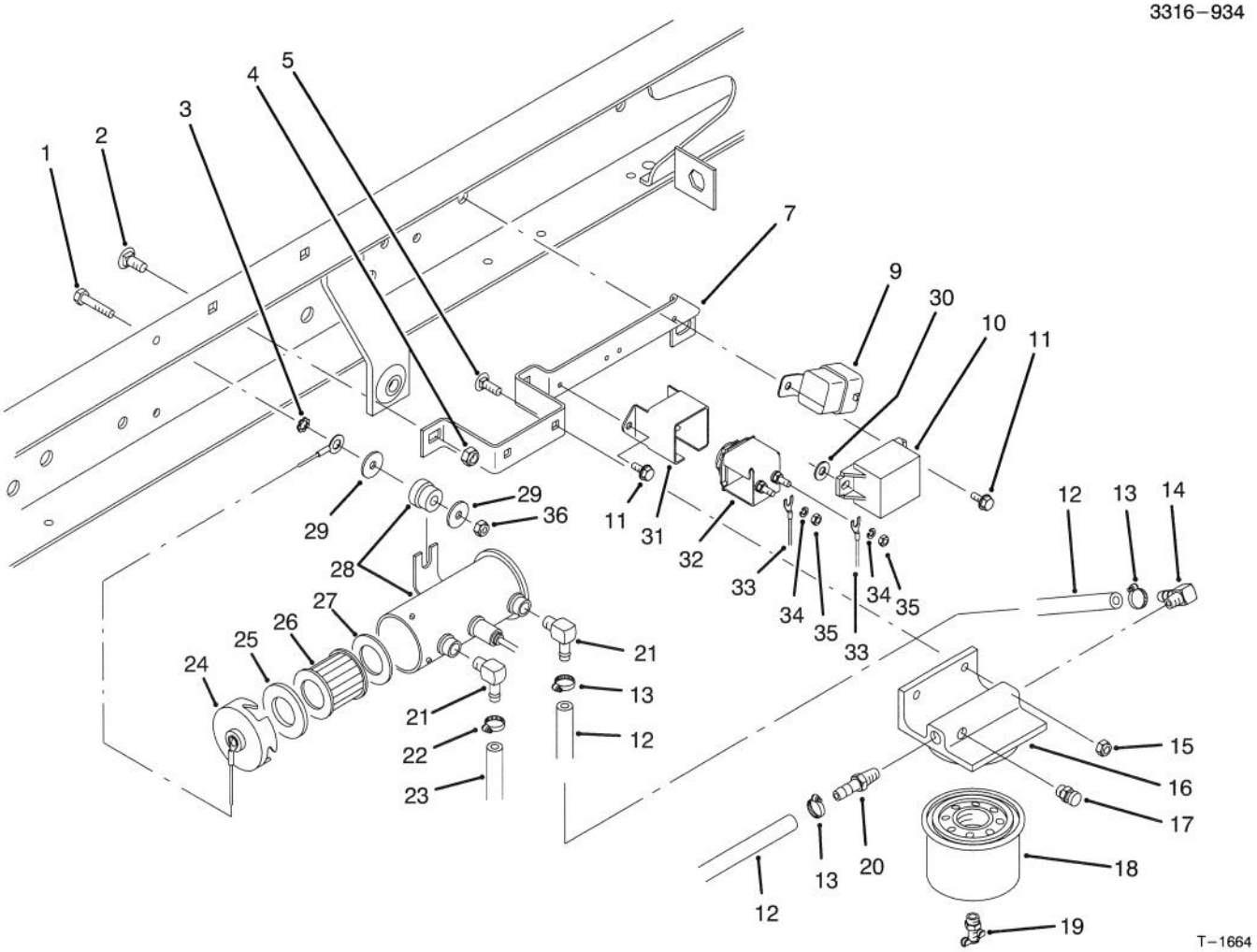

FUEL FILTER, FUEL PUMP & RELAY MOUNTING

Ref. No.	Part No.	Description	No. Used
1	48–7650	Screw – Cap Hex. Hd.	2
2	3230–23	Bolt – Carriage	2
3	3255–7	Washer – ETLW	1
4	3296–29	Nut – Lock	2
5	3229–25	Nut – Lock	2
7	87–7380	Bracket – Relay/Indicator	1
9	70–1480	Relay – S.P.D.T.	1
10	66–8800	Relay	1
11	12–5450	Screw – Hex. Hd.	4
12	27–5360	Hose – Fuel	2
13	2412–108	Clamp – Hose	3
14	353–707	Fitting – 90° Barb	1
15	3296–42	Nut – Lock	2
16	63–8280	Head – Filter	1
17	63–8290	Vent – Air	1
18	63–8300	Element – Filter	1
19	63–8310	Drain – Filter	1
20	353–783	Fitting – Straight	1

Ref. No.	Part No.	Description	No. Used
21	46–3710	Fitting – 90°	2
22	92–2379	Clamp – Hose	1
23	63–9640	Hose – Fuel Tank to Pump	1
24	43–2580	Magnet	1
25	43–2560	Gasket	1
26	43–2550	Filter	1
27	43–2570	Gasket	1
28	53–8150	Fuel Pump Assembly (Incl. Ref. #24–27)	1
29	3256–67	Washer – Flat	3
30	3256–22	Washer – Flat	1
31	70–8560	Retainer – Indicator	1
32	66–8700	Glow Plug Indicator Assy. (Incl. Ref. #34–35)	1
33	93–7130	Harness – Wire	1
34	48–8000	Washer – Lock	2
35	43–5970	Nut	2
36	49–7810	Nut – Lock	2

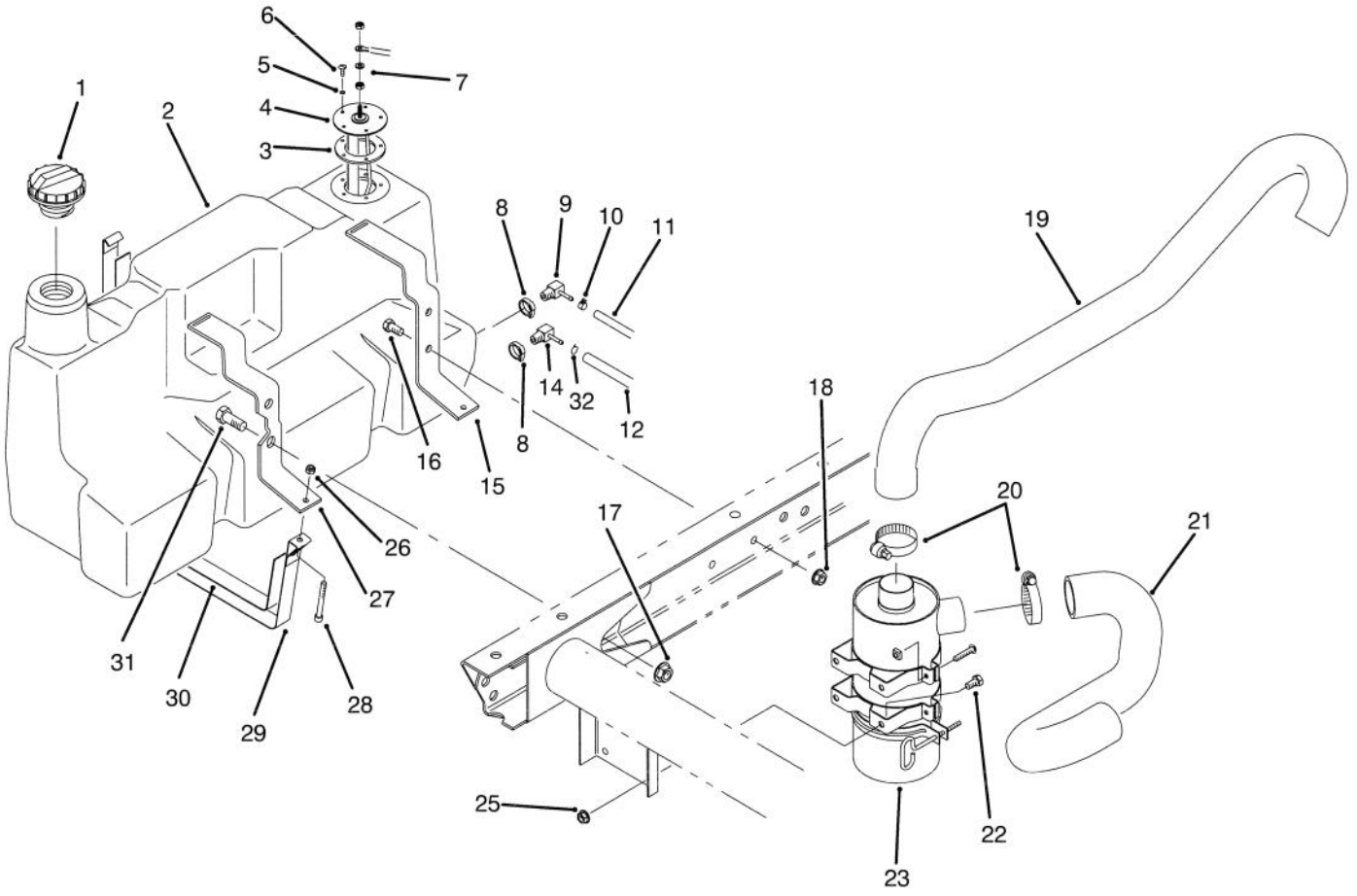

T–1665

FUEL TANK & AIR CLEANER ASSEMBLY

Ref. No.	Part No.	Description	No. Used
1	93–3102	Cap – Fuel	1
2	87–0650	Fuel Tank Assembly (Incl. Ref. #8, 9 & 14)	1
3	62–7650	Gasket – Sending Unit	1
4	63–7640	Unit – Sending	1
5	3253–15	Washer – Lock	5
6	32122–24	Screw – Round Hd.	5
7	5–3637	Washer – Flat	1
8	2412–36	Clamp	1
9	76–4430	Fitting – Fuel 90°	1
10	2412–108	Clamp – Hose	1
11	75–4706	Hose – Fuel	1
12	63–9640	Hose – Fuel	1
14	353–781	Fitting – Fuel 90°	1
15	87–3140	Support – Rear	1
16	323–4	Screw – Cap Hex. Hd.	2

Ref. No.	Part No.	Description	No. Used
17	32128–23	Nut – Flange	2
18	3290–357	Nut – Flange	2
19	87–4050	Hose – Air Cleaner	1
20	2412–92	Clamp – Hose	2
21	87–9310	Hose – Air Cleaner	1
22	322–2	Screw – Cap Hex. Hd.	4
23	87–9410	Air Cleaner Assembly	1
25	32128–20	Nut – Flange Lock	4
26	3296–42	Nut – Lock	2
27	87–3150	Support – Front	1
28	3274–54	Screw – Hex. Socket Hd.	2
29	87–3160	Strap – Tank Support	2
30	87–3170	Pad – Tank Support Strap	2
31	3234–38	Screw – Cap Hex. Hd.	2
32	92–2379	Clamp – Hose	1

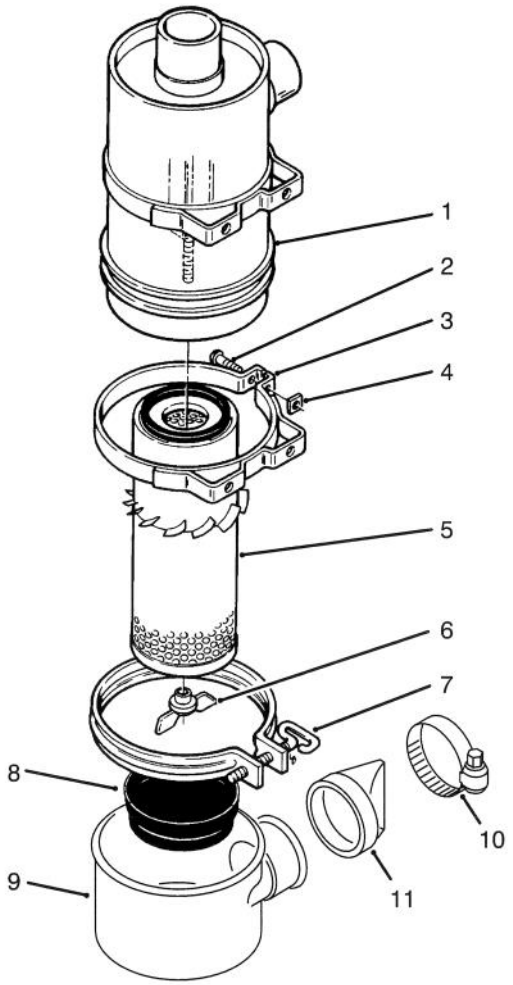

T–1349

AIR CLEANER ASSEMBLY

Ref. No.	Part No.	Description	No. Used
1		Body	1
2	3258–19	Screw – Round Head	2
3	33–1350	Band Assembly (Incl. Ref. #2 & 4)	2
4	32107–11	Nut – Square	2
5	33–1300	Assembly – Element	1
6	33–1330	Assembly – Nut	1
7	33–1340	Clamp Assembly	1
8	33–1310	Baffle	1
9	87–9390	Cup	1
10	2412–130	Clamp – Hose	1
11	87–9400	Valve	1
*	87–9410	Air Cleaner (Complete) (Incl. Ref. #1 & 5–11)	1

*Not Illustrated

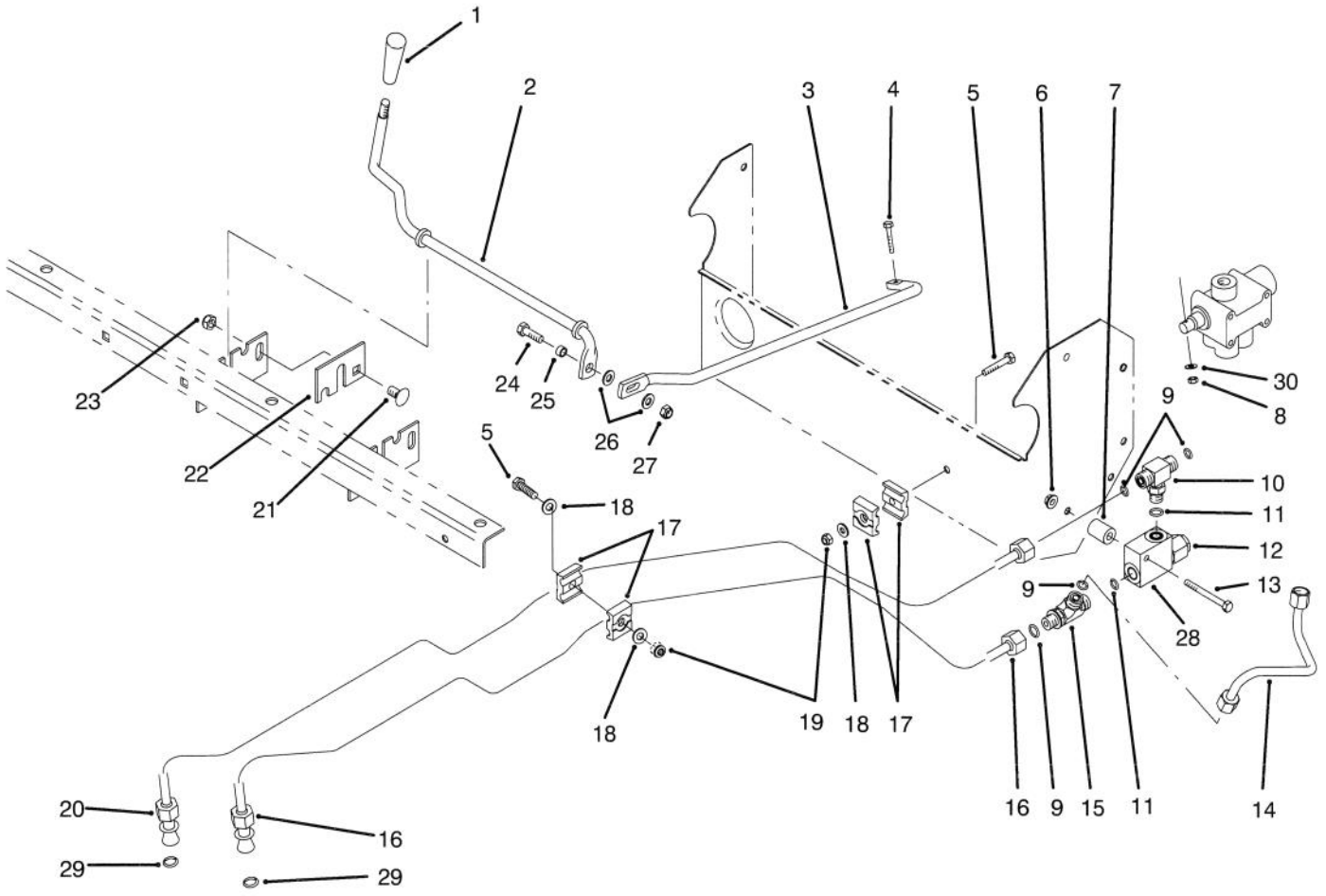

T–1610

LIFT VALVE LINKAGE ASSEMBLY

Ref. No.	Part No.	Description	No. Used
1	233–39	Knob	1
2	87–4500	Rod – Pivot	1
3	87–4510	Rod – Connecting	1
4	87–5150	Screw – Cap Hex. Hd.	1
5	321–9	Screw – Cap Hex. Hd.	2
6	32128–33	Nut – Flange Lock	1
7	75–9610	Spacer	1
8	87–5140	Nut – Lock	1
9	237–22	Seal – O–Ring	4
10	340–94	Fitting – Hydraulic Tee (Incl. Ref. #9 & 11)	1
11	237–42	Seal – O–Ring	2
12	92–2160	Cartridge – Relief Valve	1
13	321–15	Screw – Cap Hex. Hd.	1
14	87–4560	Tube – Hydraulic	1
15	340–86	Fitting – Hydraulic Tee (Incl. Ref. #9 & 11)	1
16	93–7092	Hydraulic Tube Assembly (Incl. Ref. #29)	1

Ref. No.	Part No.	Description	No. Used
17	56–7973	Clamp – Hydraulic Tube	4
18	3256–22	Washer – Flat	3
19	3296–42	Nut – Lock	2
20	93–7093	Hydraulic Tube Assembly (Incl. Ref. #29)	1
21	3231–21	Bolt – Carriage	1
22	87–4490	Bracket – Hold–Down	1
23	3296–39	Nut – Lock	1
24	322–5	Screw – Cap Hex. Hd.	1
25	87–5080	Spacer – Connecting	1
26	3256–23	Washer – Flat	2
27	3296–29	Nut – Lock	1
28	92–2161	Body – Relief Valve	1
29	39–7310	Seal – O–Ring	2
30	3256–14	Washer – Flat	1
*	87–3680	Assembly – Relief Valve (Incl. Ref. #12 & 28)	1

*Not Illustrated

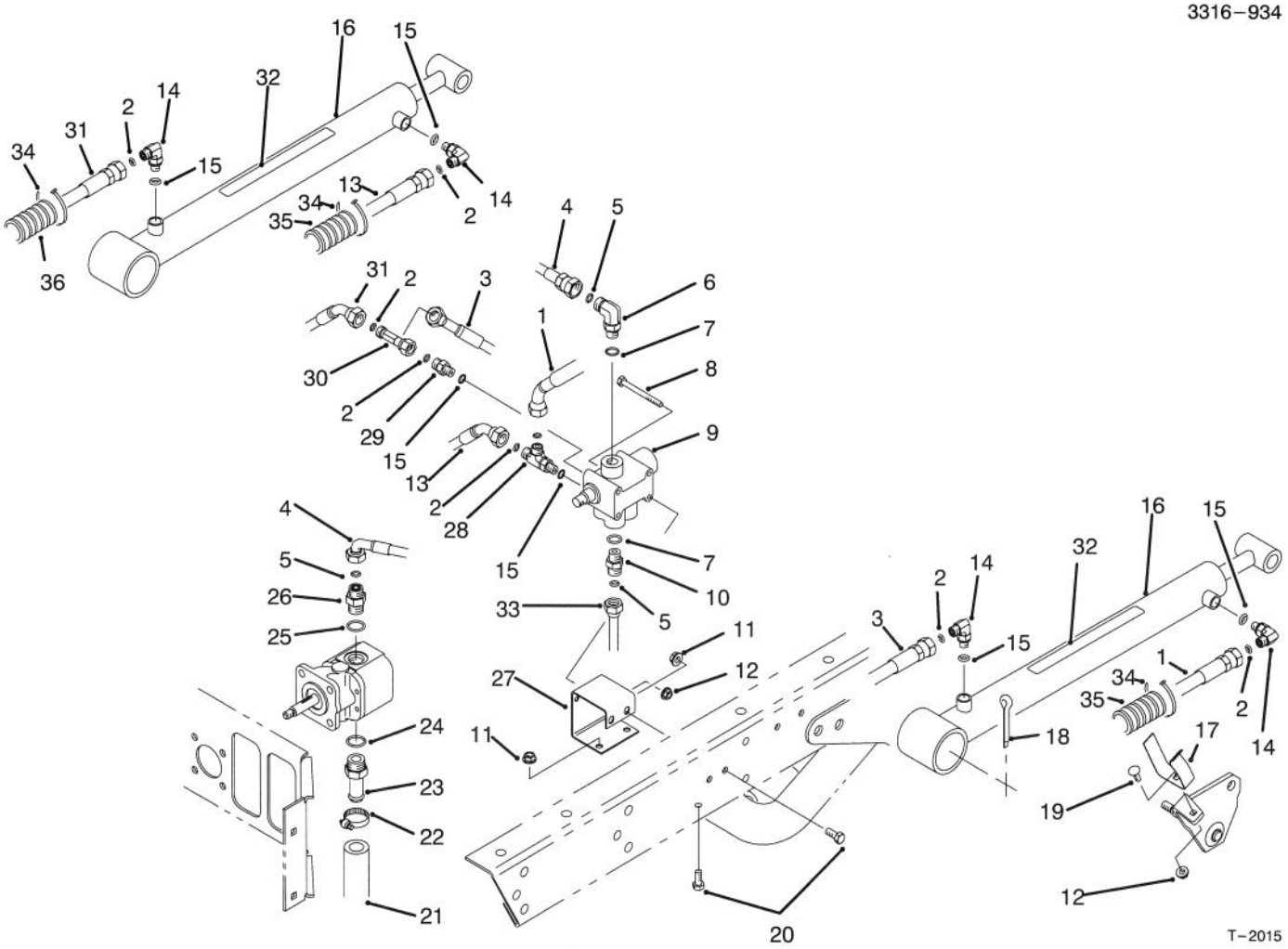

LIFT VALVE & CYLINDER ASSEMBLY

Ref. No.	Part No.	Description	No. Used
1	92–2697	Hose – Hydraulic	1
2	237–21	Seal – O–Ring	6
3	87–4880	Hose – Hydraulic	1
4	87–4870	Hose – Hydraulic	1
5	237–22	Seal – O–Ring	3
6	340–77	Fitting – Hydraulic 90° (Incl. Ref. #5 & 7)	1
7	237–42	Seal – O–Ring	2
8	321–14	Screw – Cap Hex. Hd.	2
9	43–1950	Valve	1
10	340–2	Fitting – Straight	1
11	32128–20	Nut – Flange Head	4
12	32128–33	Nut – Flange Head	2
13	87–4910	Hose – Hydraulic	1
14	340–132	Fitting – Hydraulic 90° (Incl. Ref. #2 & 15)	4
15	237–78	Seal – O–Ring	4
16	87–7990	Hydraulic Cylinder Assy. (Incl. Ref. #32)	2
17	87–3720	Retainer – Cylinder	2
18	3272–37	Pln – Cotter	2
19	3229–25	Screw – Carriage	2
20	322–3	Screw – Cap Hex. Hd.	4

Ref. No.	Part No.	Description	No. Used
21	87–3670	Hose – Hydraulic	1
22	2412–34	Clamp	1
23	354–136	Fitting – Hydraulic Straight (Incl. Ref. #24)	1
24	237–80	Seal – O–Ring	1
25	237–79	Seal – O–Ring	1
26	340–3	Fitting – Hydraulic Straight (Incl. Ref. #5 & 25)	1
27	87–4520	Bracket – Dump Valve	1
28	340–140	Fitting – Hydraulic Tee (Incl. Ref. #2 & 15)	1
29	340–92	Fitting – Hydraulic Straight (Incl. Ref. #2 & 15)	1
30	340–151	Fitting – Hydraulic Tee (Incl. Ref. #2)	1
31	87–4900	Hose – Hydraulic	1
‡32	87–7930	Decal – Warning (US)	2
‡*	93–9852	Decal – Warning (CE)	2
33	87–4560	Tube – Hydraulic	1
34	3290–378	Tie – Cable (CE)	6
35	24–7923	Conduit – Hose (CE)	2
36	24–7922	Conduit – Hose (CE)	1

*Not Illustrated

‡For different language versions of this part, see International Decal Cross Reference.

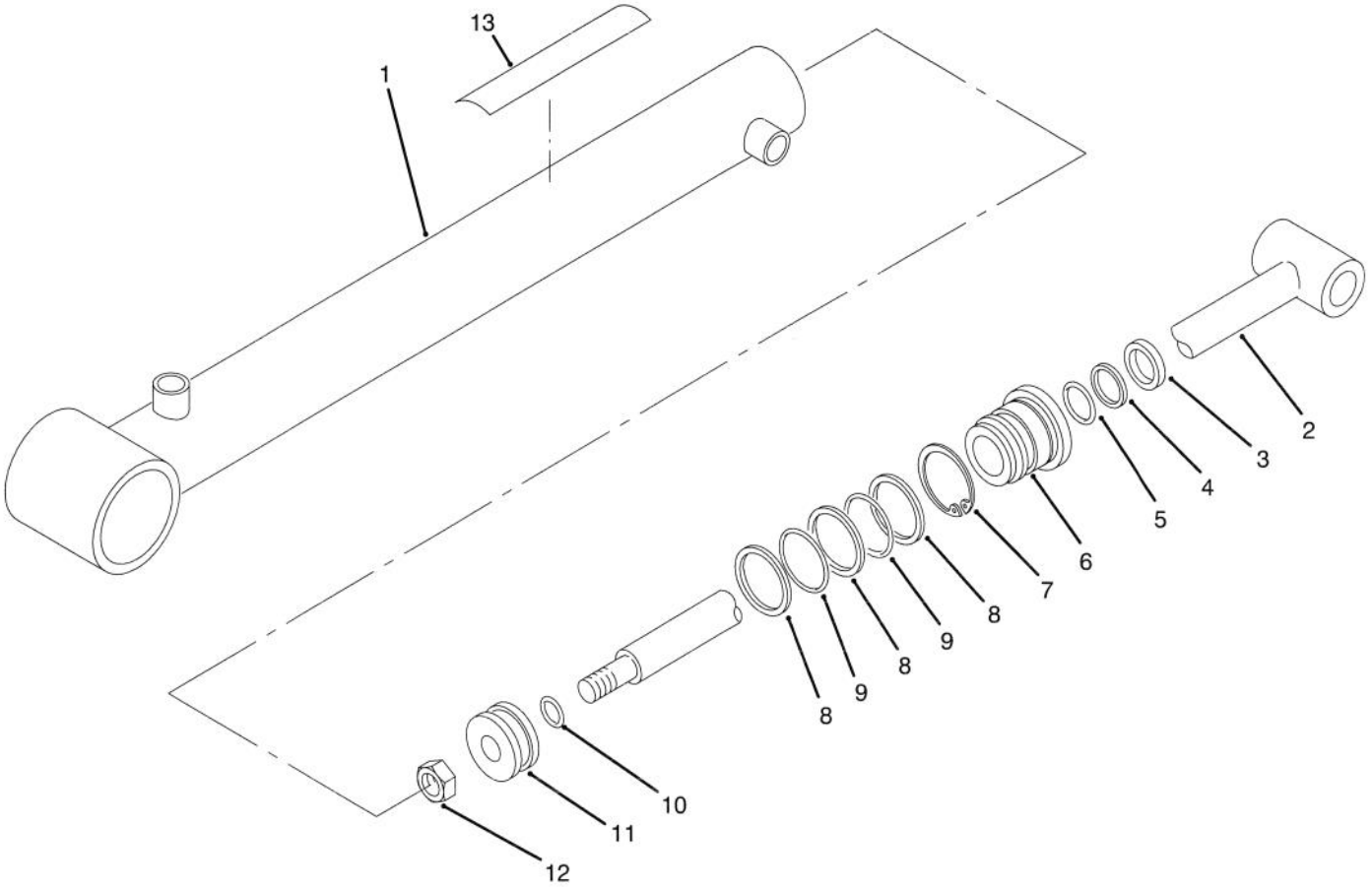

T–1612

LIFT CYLINDER 87–7990

Ref. No.	Part No.	Description	No. Used
1		Barrel Assembly	1
2	92–2163	Shaft	1
3		Seal – Dust	1
4		Backup	1
5		Seal – O–Ring	1
6	92–2162	Head	1
7	84–1680	Ring – Retaining	1
8		Backup	3

Ref. No.	Part No.	Description	No. Used
9		Seal – O–Ring	2
10		Seal – O–Ring	1
11	43–5150	Piston	1
12	32152–10	Nut	1
‡13	87–7930	Decal – Warning (US)	1
‡*	93–9852	Decal – Warning (CE)	1
*	92–2165	Kit – Repair (Incl. Ref. #3–5 & 8–10)	1

*Not Illustrated

‡For different language versions of this part, see International Decal Cross Reference.

3316–934

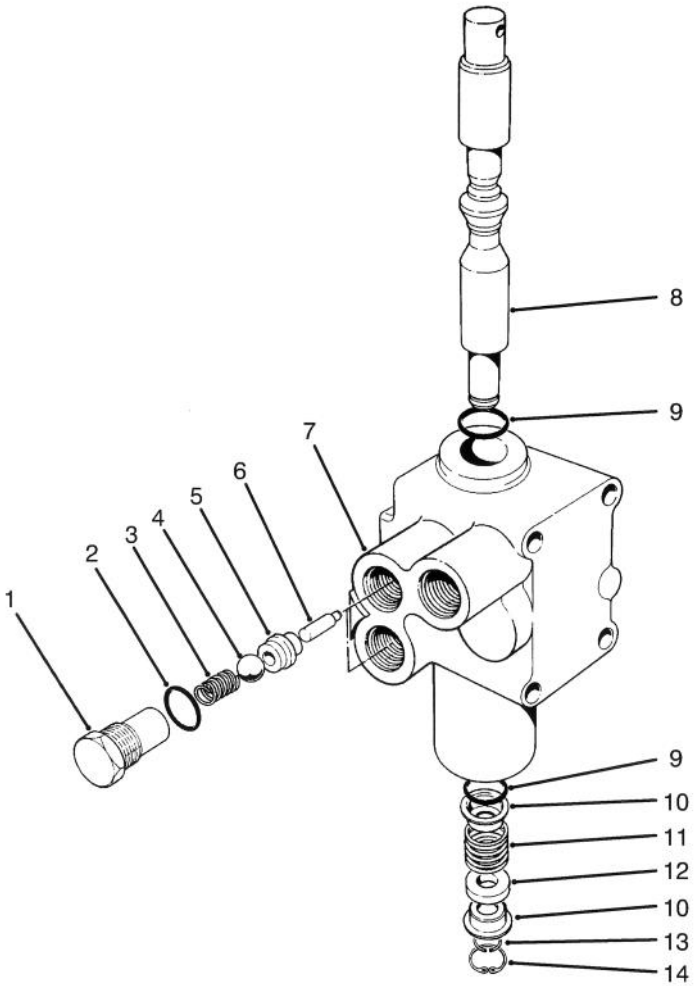

T–0280

CONTROL VALVE ASSEMBLY NO. 43–1950

Ref. No.	Part No.	Description	No. Used
1	22–8330	Plug	2
2	237–42	O–Ring	2
3	22–8340	Spring	2
4	22–8350	Ball	2
5	22–8370	Seat–Check Valve	2
6	22–8360	Pin – Cam	2
7		Body	1

Ref. No.	Part No.	Description	No. Used
8	22–8420	Spool	1
9	22–8500	O–Ring	2
10	22–8380	Retainer – Spring	2
11	22–8410	Spring	1
12	23–3030	Spacer	1
13	22–8480	Ring – Retaining, Spool	1
14	22–8490	Ring – Retaining	1

3316–934

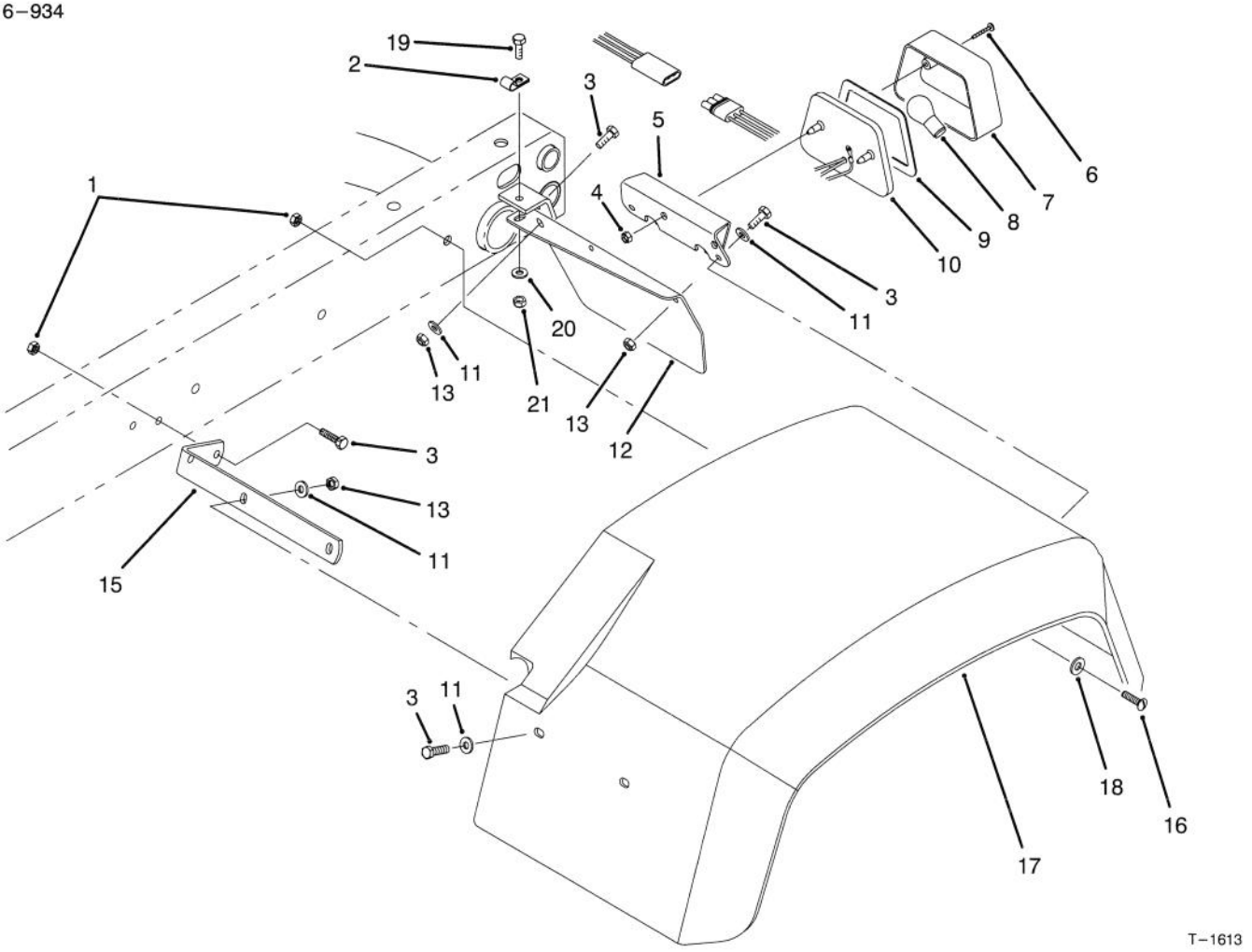

T–1613

REAR FENDER & TAIL LIGHT ASSEMBLY

Ref. No.	Part No.	Description	No. Used
1	3296–39	Nut – Lock	6
2	2412–93	Clamp – R	1
3	321–6	Screw – Cap Hex. Hd.	16
4	3290–506	Palnut	2
5	87–5770	U–Bracket – Tail Light	1
6	32144–93	Screw – Self Tapping	2
7	87–6300	Lens	1
8		Bulb (#1157 Std. 12 Volt)	1
9	87–6310	Gasket	1
10	87–2110	Tail Light Assembly (Incl. Ref. #6–9)	1

Ref. No.	Part No.	Description	No. Used
11	3256–22	Washer – Flat	19
12	93–8943	Plate – Tail Light LH	1
*	93–8944	Plate – Tail Light RH	1
13	3296–42	Nut – Lock	12
15	93–8941	Bracket – Front LH	1
*	93–8942	Bracket – Front RH	1
16	3274–94	Screw – Socket Button Hd.	6
17	87–6660	Fender – Rear 24"	2
18	3256–24	Washer – Flat	6
19	322–5	Screw – Cap Hex. Hd.	4
20	3256–23	Washer – Flat	4
21	3296–29	Nut – Lock	4

*Not Illustrated

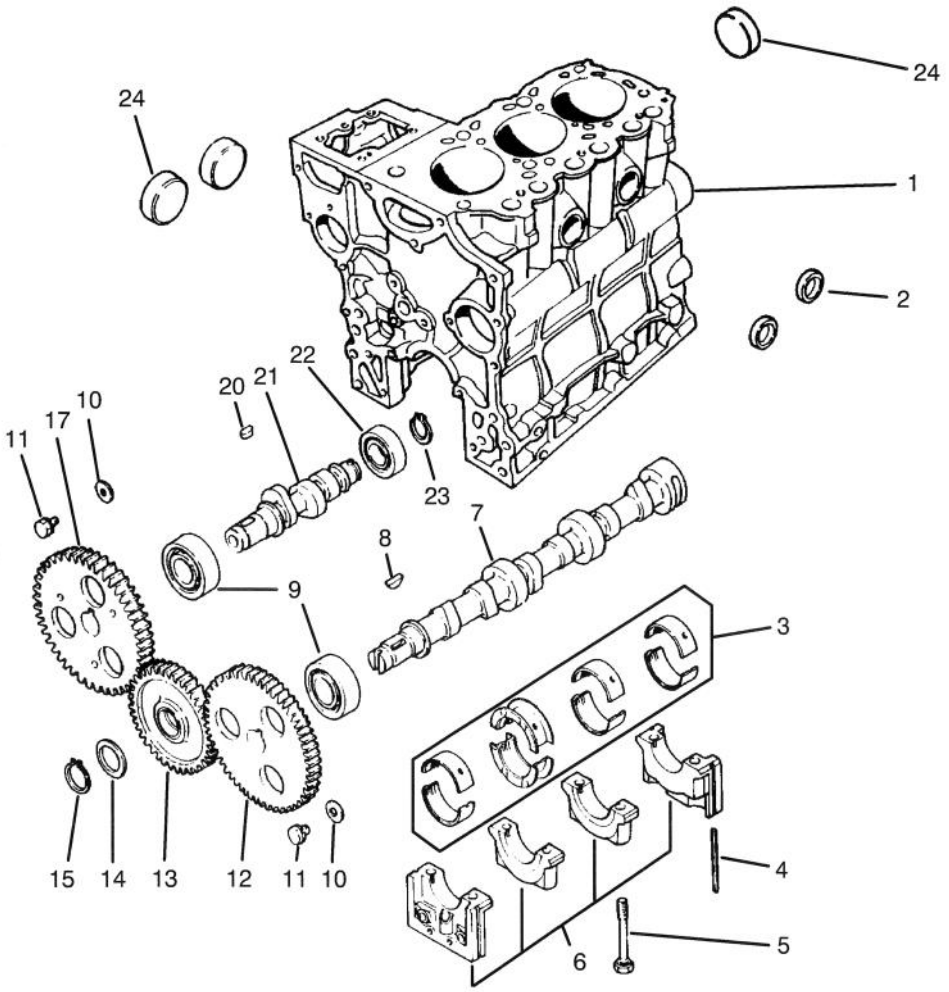

T–0564

CAMSHAFT ASSEMBLY

Ref. No.	Part No.	Description	No. Used
1	94–1257	Block Sub–Assembly (Incl. Ref. #2, 5, 6 & 24)	1
2	42–7080	Cap	2
3	75–4900	Bearing Set STD	1
*	67–2410	Bearing Set 0.25	1
*	67–2420	Bearing Set 0.50	1
4	67–2200	Seal	4
5	67–2250	Bolt	8
6		Cap Assembly	1
7	67–3010	Cam Shaft	1
8	56–0480	Key – Woodruff	1
9	67–3030	Bearing	2

Ref. No.	Part No.	Description	No. Used
10	67–3000	Washer	2
11	42–9490	Bolt w/Washer	2
12	92–0827	Gear	1
13	92–0842	Gear Assembly	1
14	92–0839	Plate	1
15	92–0841	Ring – Retaining	1
17	92–0840	Gear	1
20	42–7840	Key	1
21	67–3060	Shaft	1
22	67–3050	Bearing	1
23	67–3080	Ring – Retaining	1
24	56–0020	Plug	3

*Not Illustrated

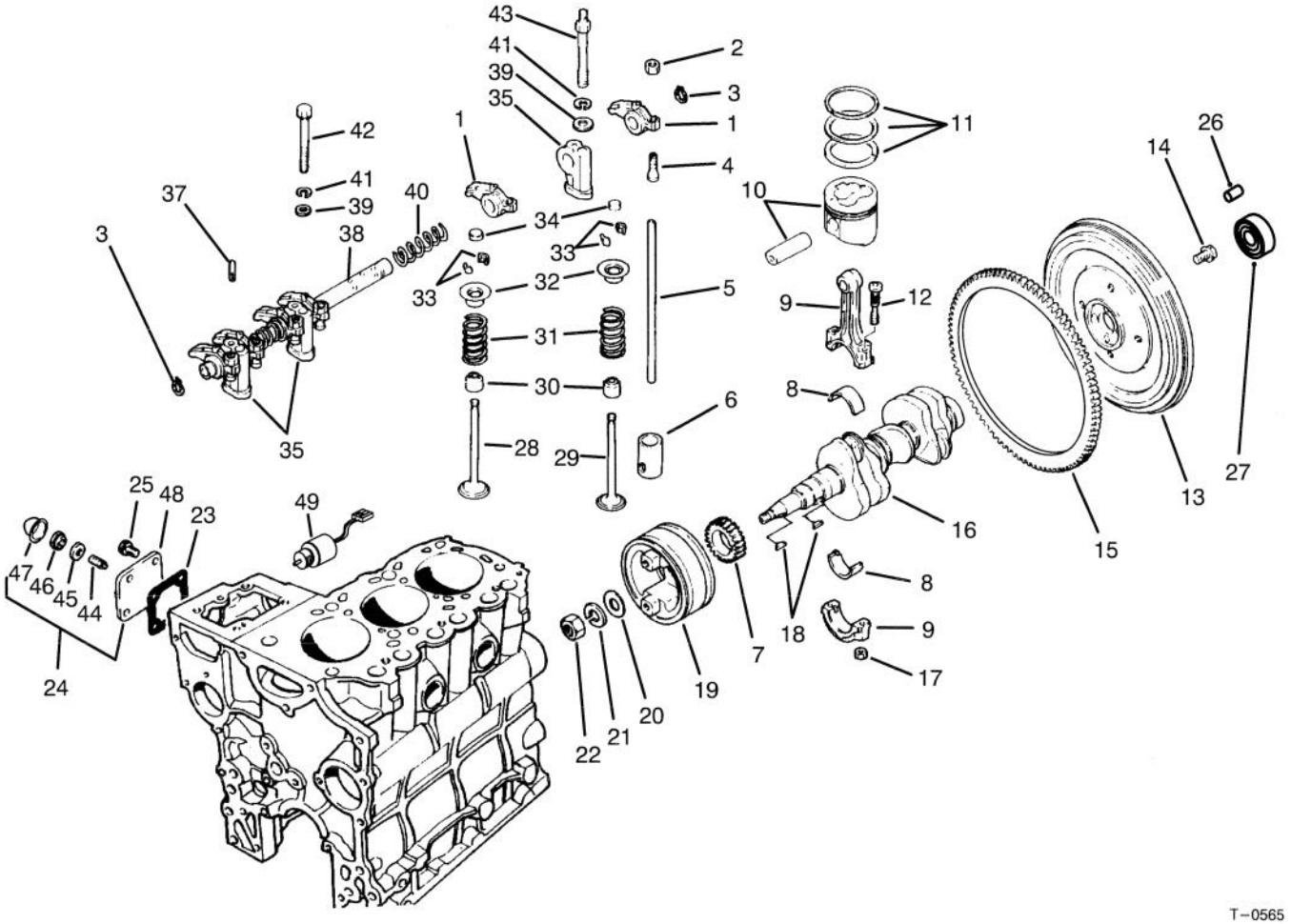

VALVES AND CRANKSHAFT ASSEMBLY

Ref. No.	Part No.	Description	No. Used
1	67–3160	Arm – Rocker	6
2	67–3230	Nut – Jam	6
3	67–3240	Ring – Retaining	2
4	67–3210	Screw – Adjusting	6
5	67–3150	Rod – Push	6
6	67–3120	Tappet	6
7	92–0835	Gear	1
8	75–5010	Bearing Set STD	3
*	67–2890	Bearing Set 0.25 US	3
*	67–2900	Bearing Set 0.50 US	3
9	67–2850	Connecting Rod Assembly (Incl. Ref. #12 & 17)	3
10	93–8973	Piston & Pin Set STD	3
*	93–8975	Piston & Pin Set 0.25 OS	3
*	93–8976	Piston & Pin Set 0.50 OS	3
11	75–5050	Ring Set STD	3
*	75–5060	Ring Set 0.25 OS	3
*	75–5070	Ring Set 0.50 OS	3
12	67–2860	Bolt	6
13	92–0836	Flywheel Assembly (Incl. Ref. #15)	1
14	67–2990	Bolt	4
15	67–2980	Gear – Ring	1
16	92–0845	Crankshaft	1
17	42–9590	Nut	6
18	56–0480	Key – Woodruff	2

Ref. No.	Part No.	Description	No. Used
19	70–8680	Pulley – Crankshaft	1
20	67–2950	Washer	1
21	67–2960	Washer – Lock	1
22	67–2940	Nut – Jam	1
23	67–4310	Gasket	1
24	75–5110	Cover Assembly (Incl. Ref. #44–48)	1
25	42–9440	Bolt W/Washer	4
26	51–5610	Pin – Dowel	3
27	92–1914	Bearing – Ball	1
28	67–3130	Valve – Intake	3
29	67–3140	Valve – Exhaust	3
30	42–7870	Seal	6
31	67–3110	Spring	6
32	67–3100	Retainer	6
33	42–7860	Lock	12
34	67–3180	Cap	6
35	67–3200	Stay – Rocker	3
37	67–3220	Pin	1
38	67–3190	Rocker Shaft Assembly	1
39	42–9660	Washer	4
40	67–3170	Spring	2
41	67–3260	Washer	6
42	42–9510	Bolt	1
43	67–3250	Bolt – Rockers Stay	2
44	43–3160	Screw – Adjusting	1

*Not Illustrated

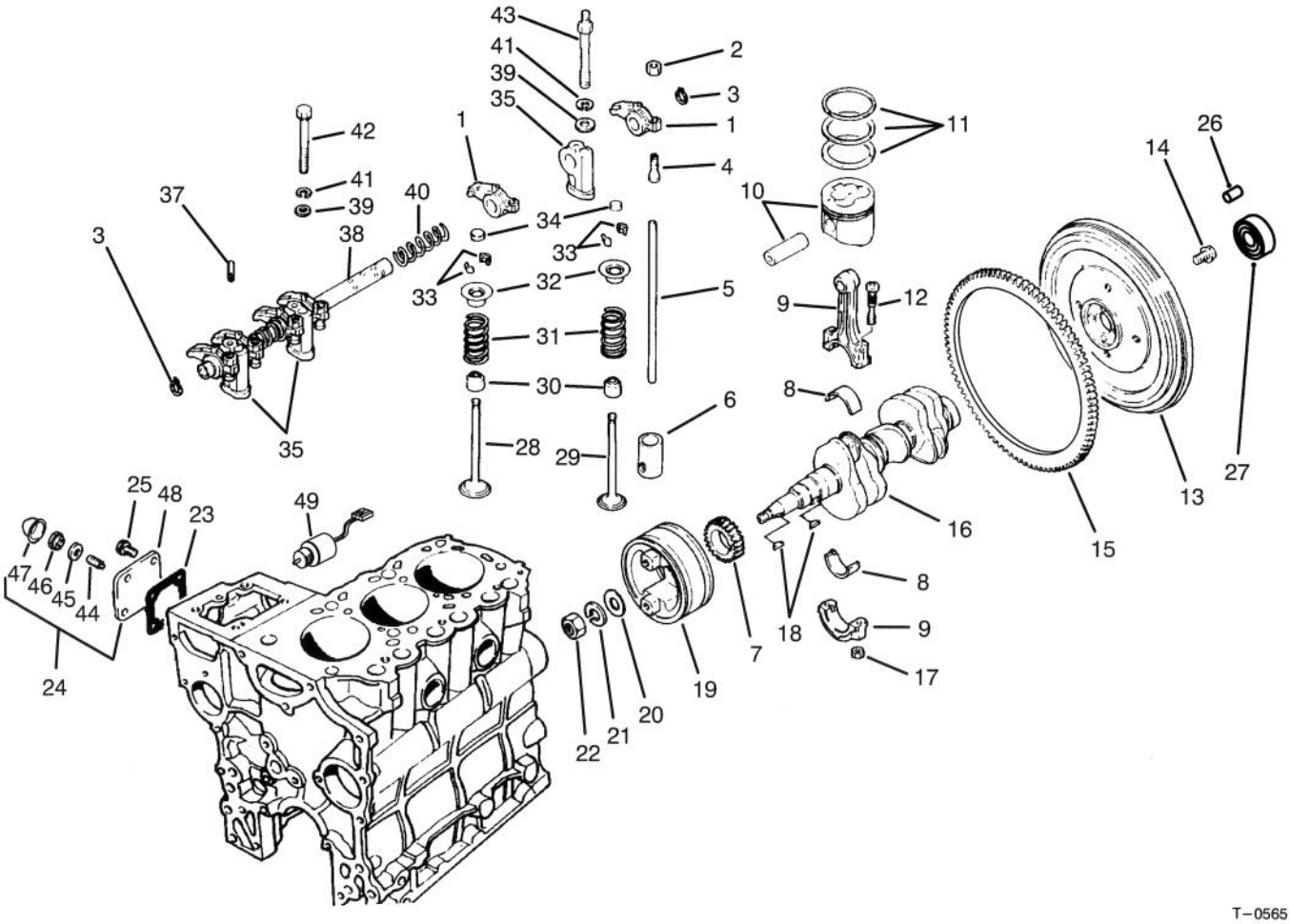

T–0565

VALVES AND CRANKSHAFT ASSEMBLY (Continued)

Ref. No.	Part No.	Description	No. Used
45	75–5120	Gasket	1
46	43–5960	Nut – Special	1
47	43–2820	Cap – Sealing	1

Ref. No.	Part No.	Description	No. Used
48	67–4250	Cover	1
49	63–7440	Solenoid – Shutoff	1

3316–934

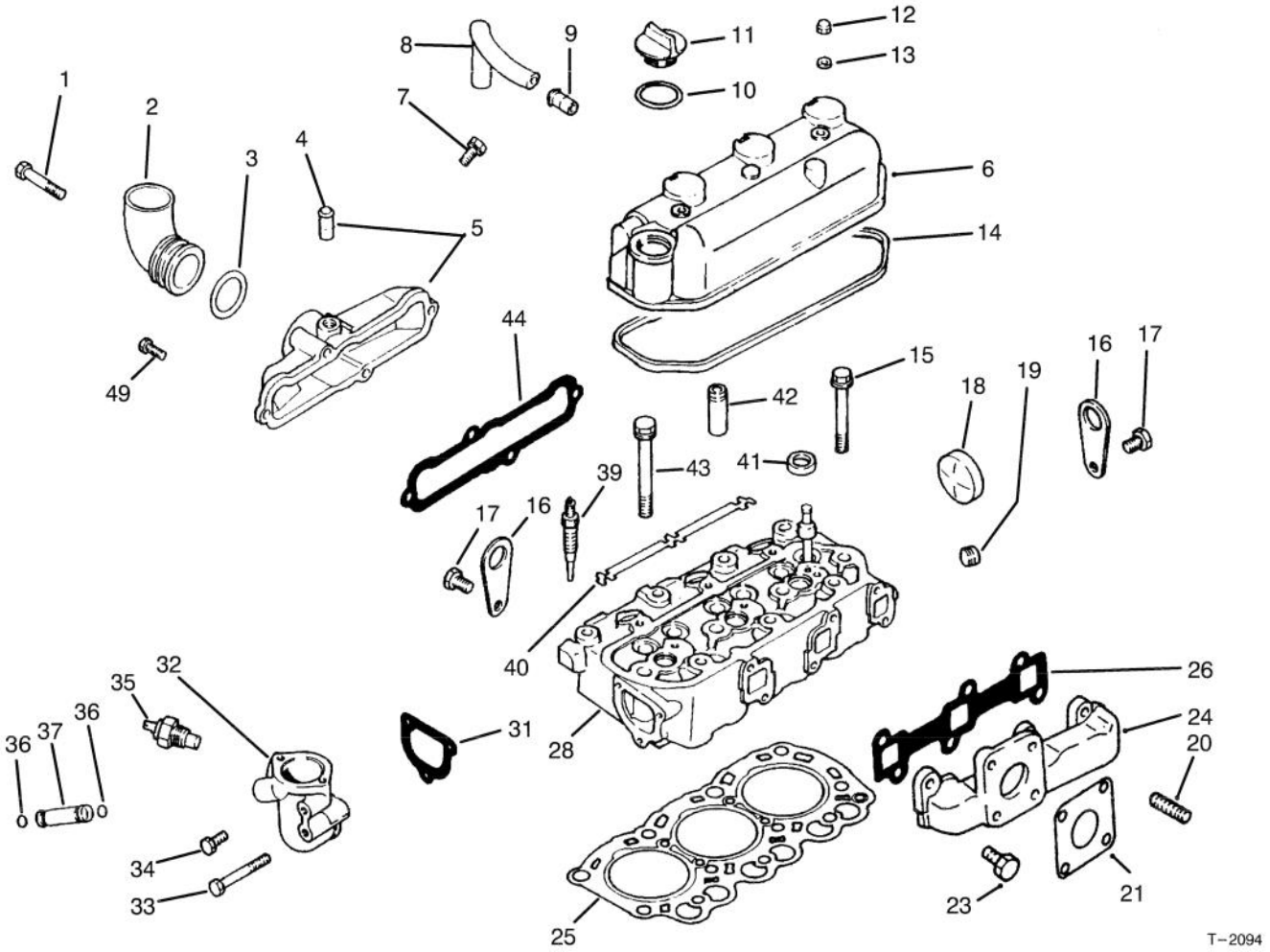

CYLINDER HEAD ASSEMBLY

Ref. No.	Part No.	Description	No. Used
1	67–4400	Bolt	2
2	67–4520	Pipe	1
3	67–4540	O–Ring	1
4	42–7510	Pipe	1
5	67–4530	Sub–Assy. Cover (Intake)	1
6	67–2750	Cover Assembly (Incl. Ref. #9)	1
7	42–9430	Bolt w/Washer	1
8	67–2670	Hose – Breather	1
9	42–7510	Pipe	1
10	67–2660	Seal – O–Ring	1
11	67–2650	Oil Filler Cap Assembly (Incl. Ref. #10)	1
12	67–2770	Nut – Cap	2
13	67–2780	Washer	2
14	67–2760	Gasket	1
15	67–2740	Bolt – Flange	3
16	67–2680	Hanger – Engine	2
17	67–2340	Bolt w/Washer	2
18	56–0020	Plug – Expansion	1
19	67–2570	Plug – Taper	1

Ref. No.	Part No.	Description	No. Used
20	42–9570	Stud	4
21	42–9110	Gasket	1
23	67–4590	Bolt	6
24	70–8750	Manifold – Exhaust	1
25	94–1258	Gasket – Cylinder Head	1
26	67–4570	Gasket – Exhaust Manifold	1
28	93–8970	Cylinder Head Assembly (Incl. Ref. #18, 41 & 42)	1
31	67–4460	Gasket (Thermostat Fitting)	1
32	92–0837	Fitting – Thermostat	1
33	67–4470	Bolt	1
34	67–2330	Bolt	4
35	67–4510	Gauge Nut – Water Temp.	1
36	43–2710	O–Ring	2
37	67–4480	Pipe – By–Pass	1
39	92–0844	Plug – Glow	3
40	67–4690	Plate – Glow Plug	1
41	67–2710	Cap – Sealing	3
42	67–2700	Guide – Valve	6
43	67–2730	Bolt	8
44	67–4550	Gasket – Intake Manifold	1

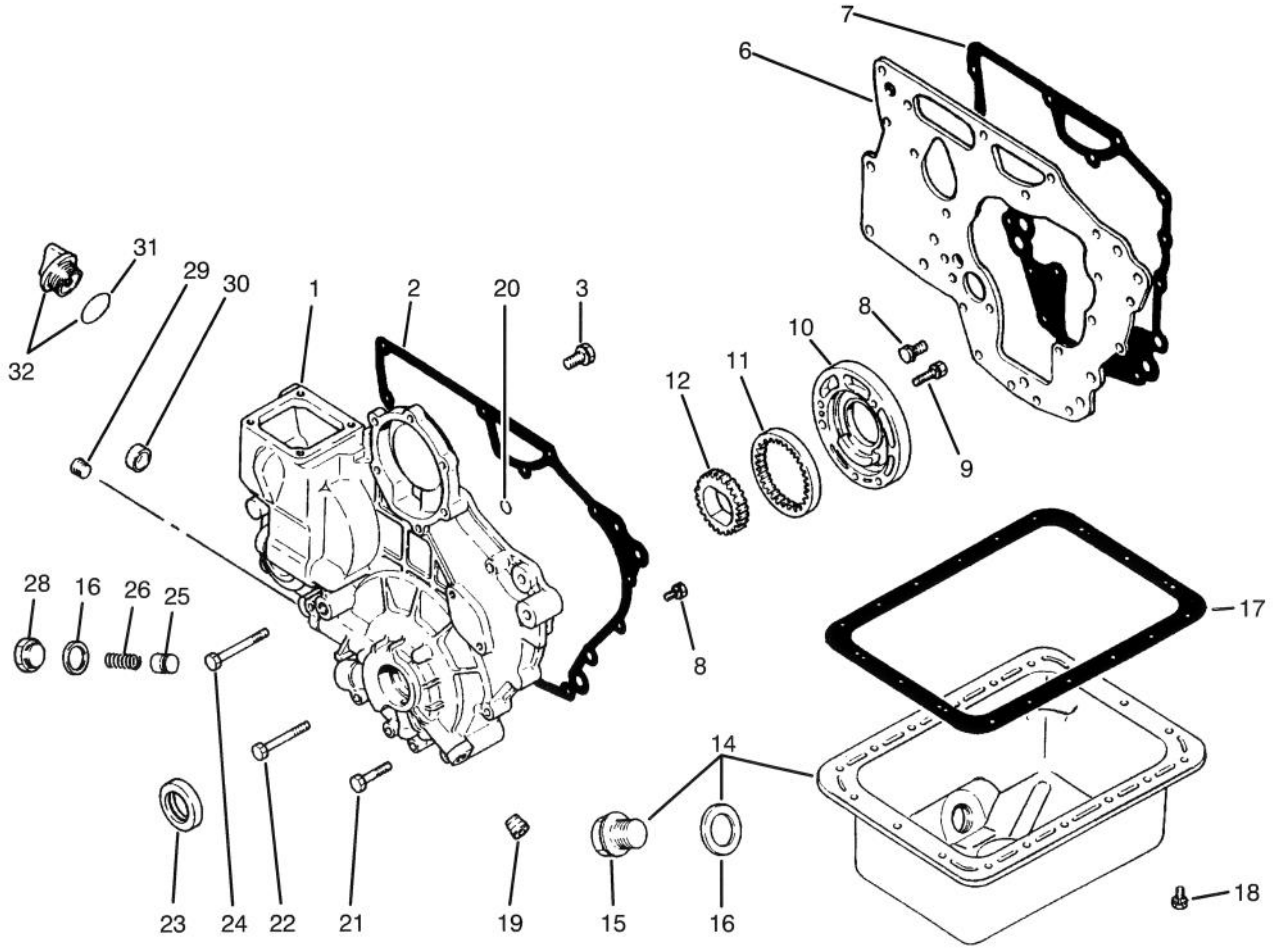

T–0567

CRANKCASE ASSEMBLY

Ref. No.	Part No.	Description	No. Used
1	94–1259	Case Sub–Assembly	1
2	67–2580	Gasket – Case	1
3	67–2340	Bolt w/Washer	3
6	67–2310	Plate	1
7	67–2320	Gasket – Plate	1
8	42–9440	Bolt w/Washer	11
9	67–2560	Bolt w/Washer	3
10	67–2550	Housing – Oil Pump	1
11	67–2540	Gear – Outer	1
12	67–2530	Gear – Inner	1
14	75–4910	Oil Pan Assembly (Incl. Ref. #15–16)	1
15	42–9260	Plug	1
16	42–7290	Gasket – Oil Drain	2
17	67–2480	Gasket – Oil Pan	1
18	42–9490	Bolt w/Washer	18

Ref. No.	Part No.	Description	No. Used
19	42–7210	Plug	1
20	67–2630	O–Ring	2
21	67–2600	Bolt	3
22	67–2610	Bolt	4
23	67–2590	Oil Seal	1
24	67–2620	Bolt	1
25	67–2500	Plunger	1
26	67–2510	Spring	1
28	67–2520	Plug	1
29	67–2570	Plug	1
30	67–2640	Cap	1
31	67–2660	O–Ring	1
32	67–2650	Oil Fill Cap Assembly (Inc. Ref. #31)	1
*	75–5040	Gasket Kit (Incl. Ref. #2, 7, 16 & 17)	1

*Not Illustrated

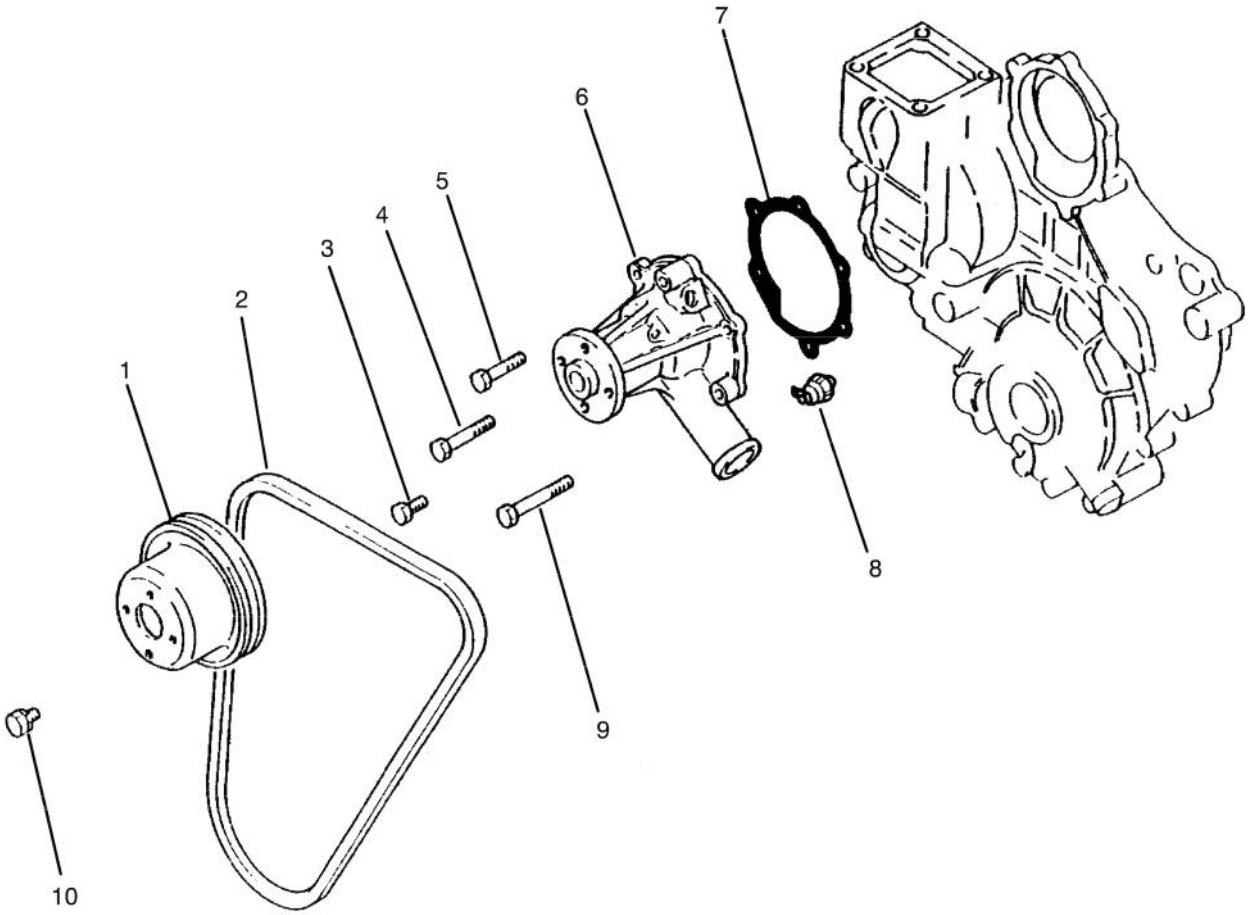

T–0568

WATER PUMP ASSEMBLY

Ref. No.	Part No.	Description	No. Used
1	67–4360	Pulley	1
2	67–4410	V–Belt	1
3	67–2330	Bolt	2
4	67–4400	Bolt	1
5	67–2600	Bolt	1

Ref. No.	Part No.	Description	No. Used
6	67–4380	Pump Assembly	1
7	67–4390	Gasket	1
8	67–4350	Oil Pressure Switch	1
9	67–2610	Bolt	2
10	42–9490	Bolt w/Washer	4

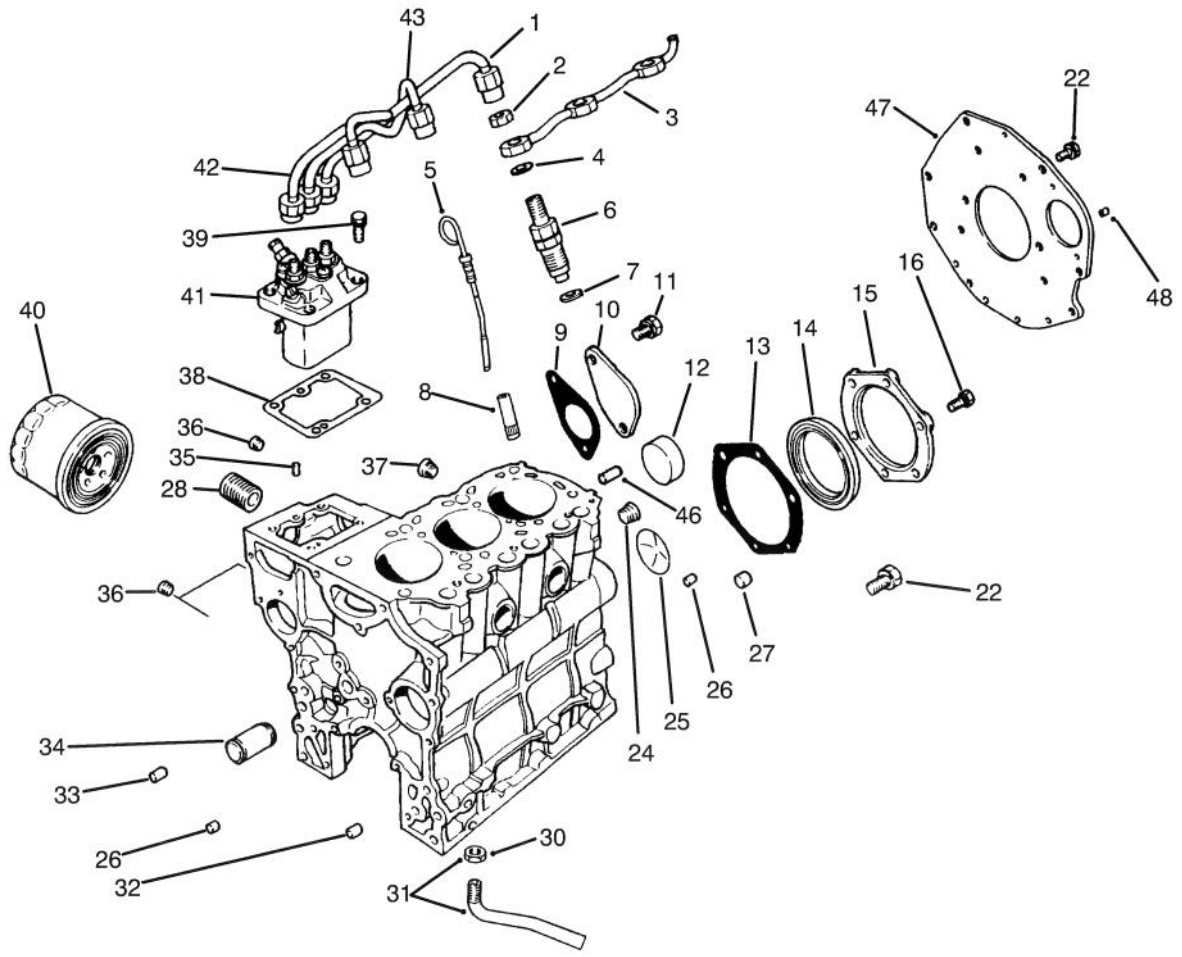

T–1667

FUEL SUPPLY & ENGINE BLOCK ASSEMBLY

Ref. No.	Part No.	Description	No. Used
1	67–3420	Assy. – Pipe No. 3	1
2	67–3430	Nut	3
3	70–8700	Pipe – Fuel Return	1
4	67–3440	Gasket	3
5	67–2450	Dipstick	1
6	67–3380	Nozzle & Holder Assembly	1
7	67–3390	Gasket	3
8	67–2220	Guide	1
9	67–2300	Gasket	1
10	67–2290	Cover	1
11	67–2340	Bolt w/Washer	2
12	56–0020	Plug	3
13	67–2280	Gasket	1
14	67–2230	Oil Seal	1
15	67–2270	Case	1
16	67–2330	Bolt	6
22	67–2440	Bolt w/Washer	6
24	67–2390	Plug	1
25	67–2350	Plug	1
26	67–2360	Bushing	2
27	67–2380	Bushing	3
28	56–1230	Shaft – Oil Filter	1
30	42–9650	Nut – Jam	1
31	67–4340	Screen Assembly (Incl. Ref. #30)	1

Ref. No.	Part No.	Description	No. Used
32	67–2370	Bushing	1
33	42–7190	Bushing	2
34	93–8972	Shaft – Idler	1
35	56–0220	Pin	2
36	67–2210	Plug	3
37	56–0100	Plug	1
38	67–3280	Shim 0.2	1
*	67–3290	Shim 0.3	1
*	67–3300	Shim 0.5	1
*	67–3310	Shim 0.4	1
*	67–3320	Shim 0.6	1
*	67–3330	Shim 0.7	1
*	67–3340	Shim 0.8	1
*	67–3350	Shim 0.9	1
*	67–3360	Shim 1.0	1
39	67–3370	Bolt w/Washer	4
40	67–4330	Oil Filter Assembly	1
41	75–5020	Pump Assembly	1
42	67–3400	Pipe No. 1 Assembly	1
43	67–3410	Pipe No. 2 Assembly	1
46	42–7160	Pin – Dowel	1
47	92–0830	Plate – Rear	1
48	92–0831	Pin – Knock	1

*Not Illustrated

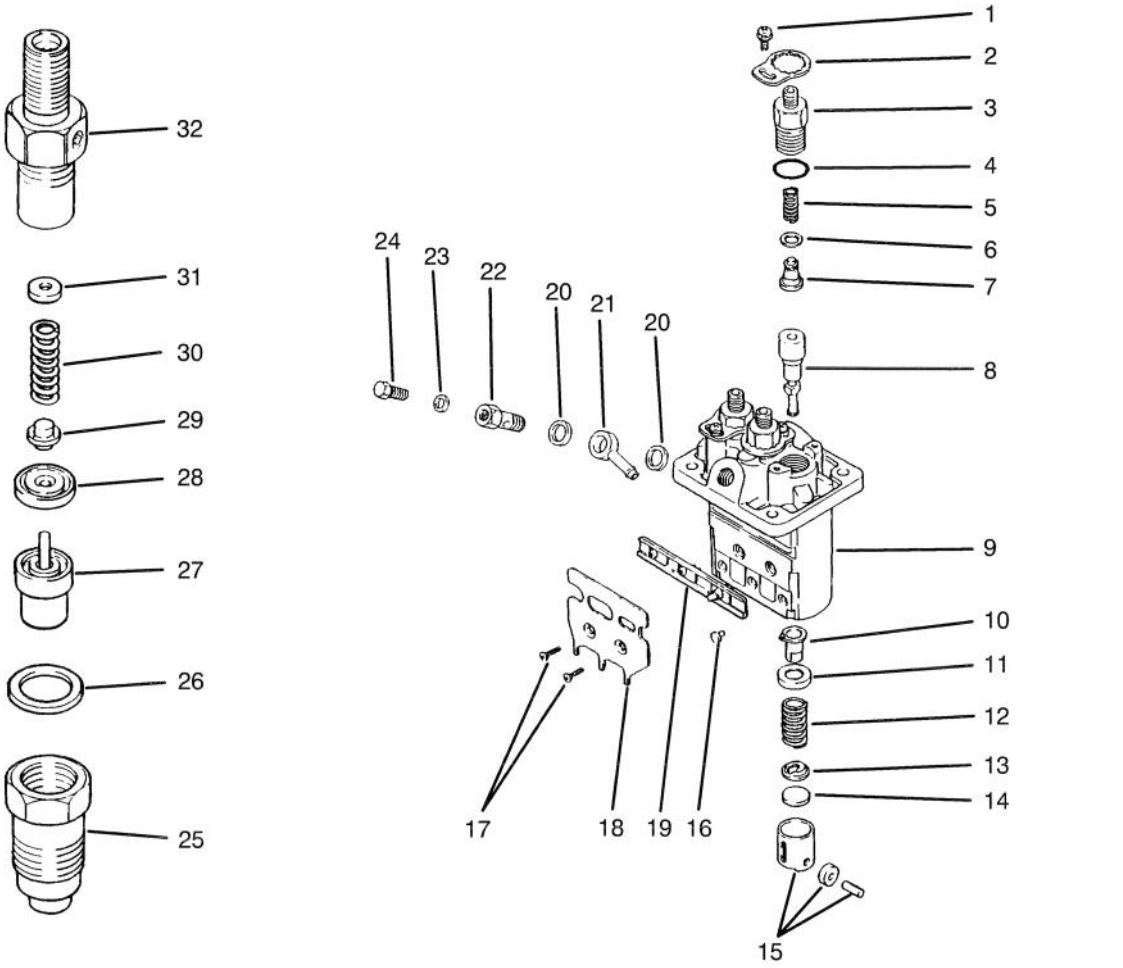

T–0570

FUEL INJECTION PUMP ASSEMBLY

Ref. No.	Part No.	Description	No. Used
1	67–3770	Screw w/Washer	3
2	67–3760	Plate – Lock	3
3	67–3470	Holder – Delivery Valve	3
4	67–3480	O–Ring	3
5	67–3490	Spring	3
6	42–8240	Gasket	3
7	67–3500	Sub–Assy. – Valve	3
8	75–4970	Sub–Assy. – Element	3
9	67–3460	Sub–Assy. – Housing	1
10	67–3520	Sub–Assy. – Sleeve	3
11	67–3530	Seat	3
12	67–3540	Spring	3
13	67–3550	Seat	3
14	67–3560	Plate – Shim 1.85	1
*	67–3570	Plate – Shim 1.9	1
*	67–3580	Plate – Shim 1.95	1
*	67–3590	Plate – Shim 2.0	1
*	67–3600	Plate – Shim 2.05	1
*	67–3610	Plate – Shim 2.1	1
*	67–3620	Plate – Shim 2.15	1
*	67–3630	Plate – Shim 2.2	1
*	67–3640	Plate – Shim 2.25	1

Ref. No.	Part No.	Description	No. Used
*14	67–3650	Plate – Shim 2.3	1
*	67–3660	Plate – Shim 2.35	1
*	67–3670	Plate – Shim 2.4	1
*	67–3680	Plate – Shim 2.45	1
*	67–3690	Plate – Shim 2.5	1
15	67–3700	Tappet Assembly	3
16	67–3810	Pin	3
17	67–3790	Screw	2
18	67–3800	Bracket	1
19	67–3780	Rack Assembly	1
20	67–3750	Washer	2
21	67–3740	Nipple	1
22	67–3730	Screw	1
23	67–3720	Washer	1
24	67–3710	Screw – Air Bleed	1
25	67–3970	Nut	3
26	67–3980	Gasket	3
27	67–3960	Nozzle Assembly	3
28	67–3950	Piece	3
29	67–3940	Pin	3
30	67–3930	Spring	3

*Not Illustrated

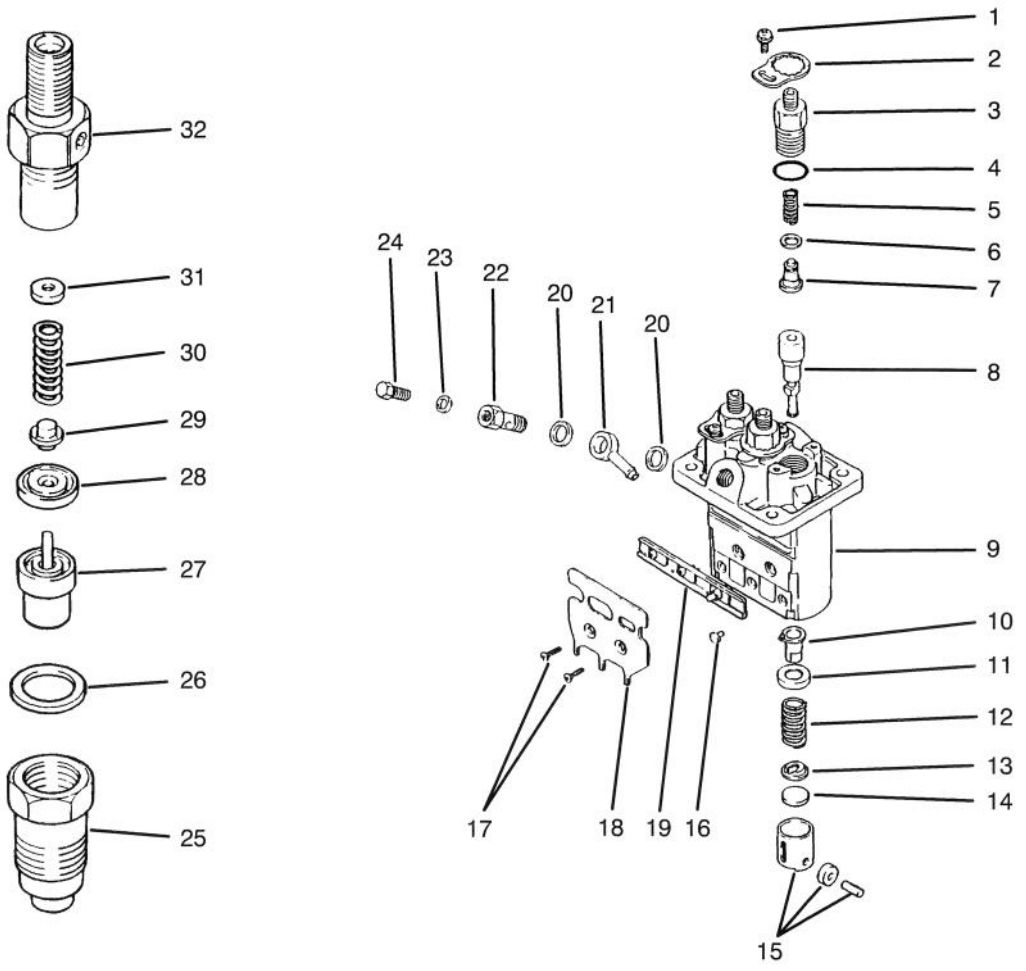

T–0570

FUEL INJECTION PUMP ASSEMBLY

Ref. No.	Part No.	Description	No. Used
31	67–3830	Washer 1.25	1
*	67–3840	Washer 1.3	1
*	67–3850	Washer 1.35	1
*	67–3860	Washer 1.4	1
*	67–3870	Washer 1.45	1
*	67–3880	Washer 1.5	1
*	67–3890	Washer 1.55	1
*	67–3900	Washer 1.6	1
*	67–3910	Washer 1.65	1
*	67–3920	Washer 1.7	1

Ref. No.	Part No.	Description	No. Used
32	75–5000	Body Sub–Assy.	3
*	53–8150	Pump Assembly (Incl. Ref. #1–24)	1
*	67–3380	Nozzle & Holder Assembly (Incl. Ref. #25–32)	3

*Not Illustrated

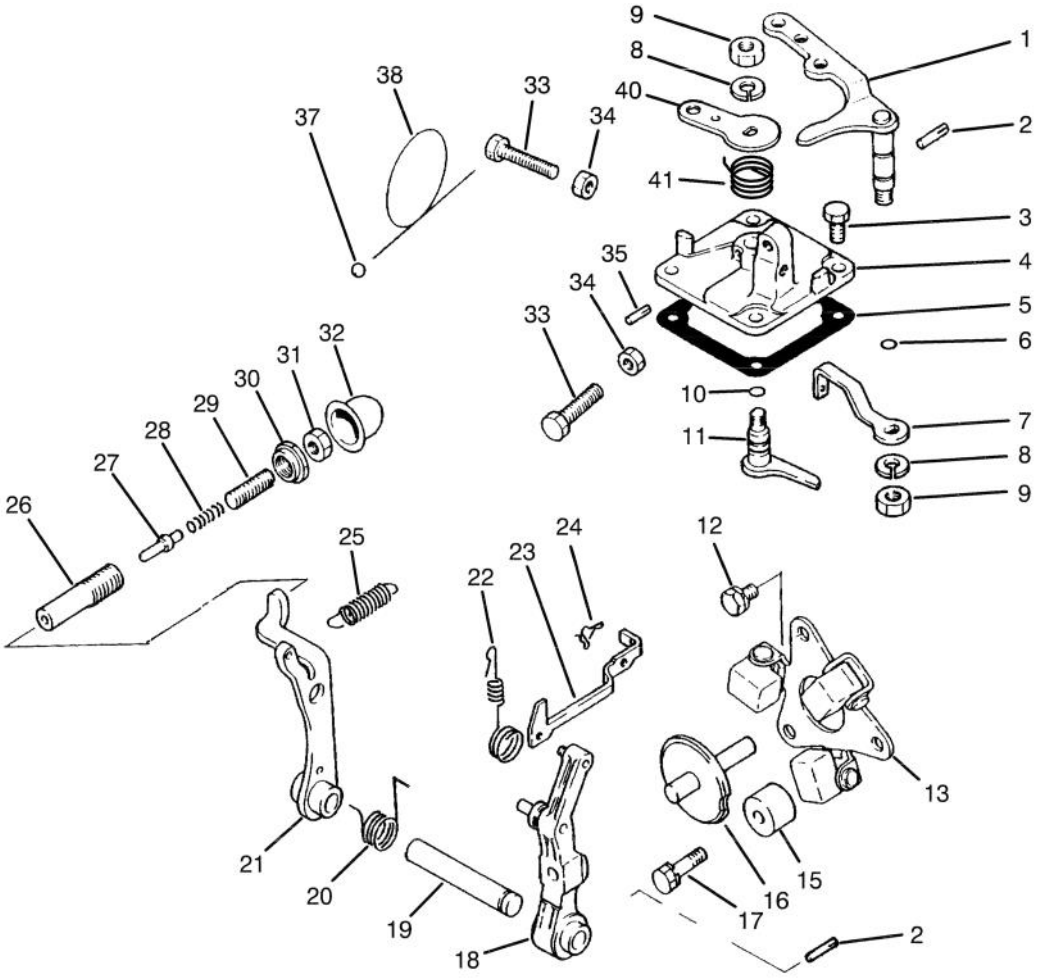

T–0571A

GOVERNOR ASSEMBLY

Ref. No.	Part No.	Description	No. Used
1	67–3990	Lever Assembly (Speed Control)	1
2	67–4000	Pin	2
3	67–4270	Bolt	4
4	67–4130	Cover – Governor	1
5	67–4160	Gasket	1
6	42–8830	O–Ring	1
7	75–4930	Lever – Governor Spring	1
8	67–3260	Washer	2
9	42–9640	Nut – Jam	2
10	42–8830	O–Ring	1
11	67–4140	Stop Lever Assembly	1
12	42–9430	Bolt w/Washer	2
13	67–4040	Weight Assembly	1
15	67–4010	Stopper	1
16	67–4070	Sliding Shaft Assembly	1
17	67–4280	Bolt w/Washer	1
18	67–4060	Governor Lever Assembly	1
19	67–4050	Shaft	1
20	67–5040	Spring	1
21	67–4090	Tension Lever Assembly	1
22	70–8720	Spring – Tie Rod	1

Ref. No.	Part No.	Description	No. Used
23	67–4030	Rod – Tie	1
24	67–4080	Clip	1
25	75–4990	Spring	1
26	67–4210	Case – Torque Spring	1
27	67–4230	Stopper	1
28	67–4190	Spring – Torque	1
29	67–4220	Screw – Adjusting	1
30	67–4200	Nut – Special	1
31	67–4180	Nut	1
32	43–2820	Cap	1
33	42–9420	Bolt	4
34	67–4290	Nut	4
35	67–4120	Pin	1
37	42–8690	Metal – Sealing	1
38	42–8700	Wire	1
40	67–4150	Lever – Stop	1
41		Spring – Return	1
*	67–4110	Cover Assembly (Incl. Ref.#4, 10, 11, 35, 10 & 41)	1
*	92–0838	Spring Set (Incl. Ref. #26–31)	1

*Not Illustrated

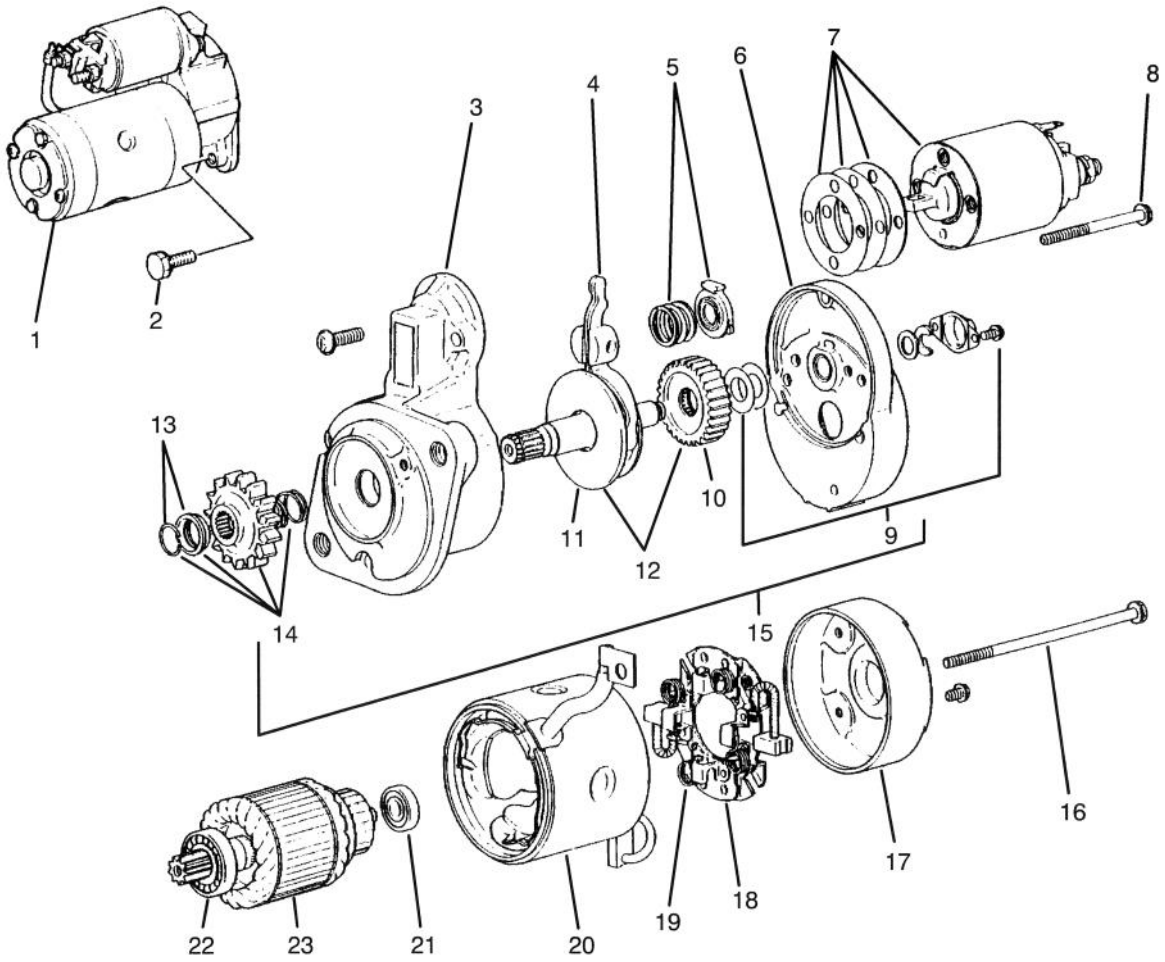

T–0572

STARTER ASSEMBLY

Ref. No.	Part No.	Description	No. Used
1	70–8760	Starter Assembly (Incl. Ref. #3–23)	1
2	92–0843	Bolt w/Washer	2
3	70–8770	Front Bracket Assembly	1
4	67–4720	Lever Assembly	1
5	67–4730	Spring Set	1
6	70–8780	Center Bracket Assembly	1
7	67–4750	Switch Assembly	1
8	52–1570	Bolt Set	1
9	56–1680	Cover Set	1
10	56–1670	Gear	1
11	67–4790	Shaft Assembly	1
12	67–4780	Gear Set (Incl. Ref. #10 & 11)	1
13	56–1640	Stopper Set	1

Ref. No.	Part No.	Description	No. Used
14	67–4770	Pinion Set (Incl. Ref. #13)	1
15	67–4760	Shaft Assembly (Incl. Ref. #9 – 12 & 14)	1
16	56–1610	Bolt	1
17	56–1720	Assy. – Bracket (Rear)	1
18	56–1700	Brush Holder Assembly (Incl. Ref. #19)	1
19	56–1710	Spring – Brush	4
20	67–4800	Yoke Assembly	1
21	56–1600	Bearing – Rear	1
22	56–1590	Bearing – Front	1
23	56–1580	Armature Set (Incl. Ref. #21 & 22)	1

3316–934

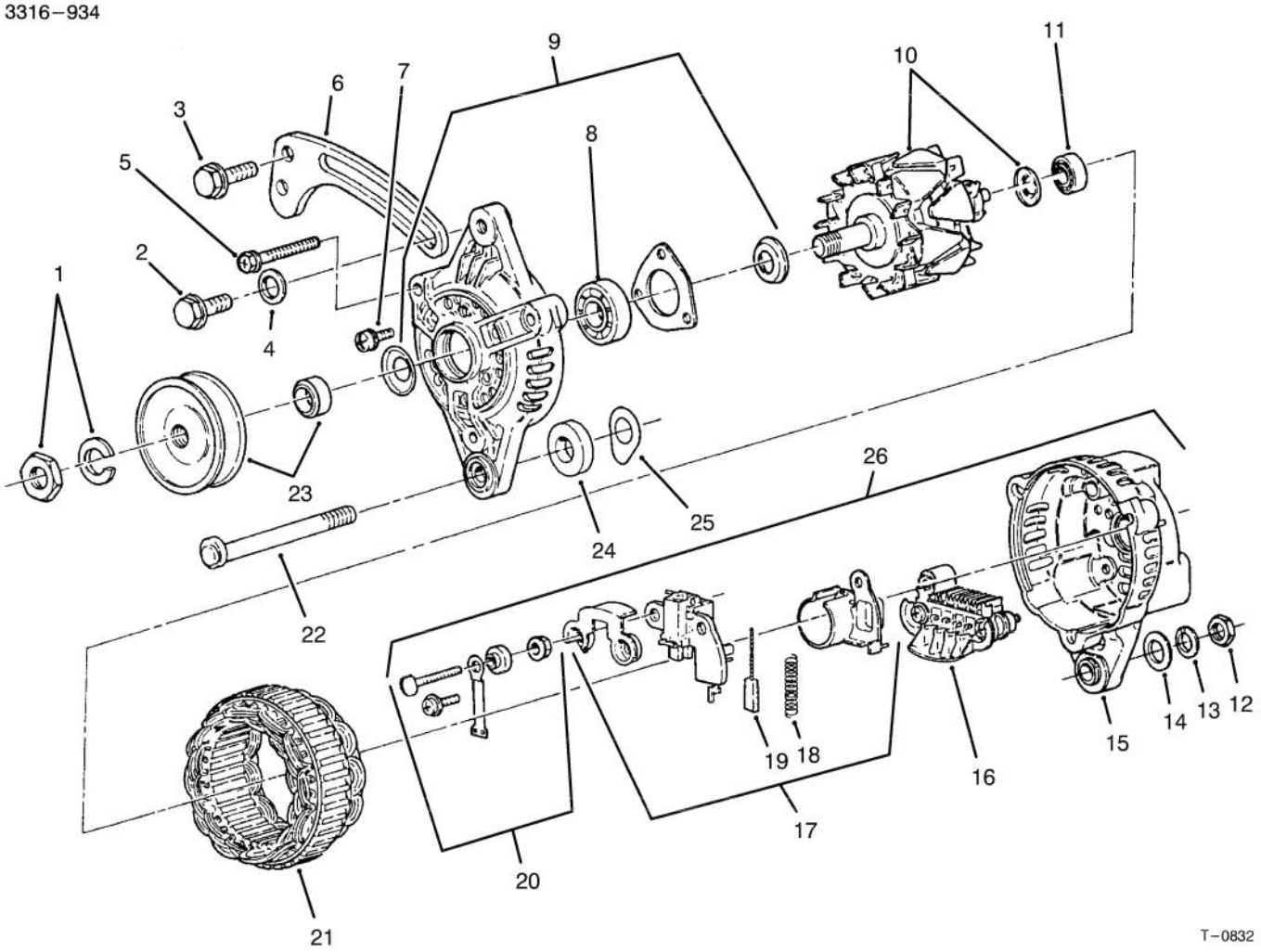

T–0832

ALTERNATOR ASSEMBLY

Ref. No.	Part No.	Description	No. Used
1	43–1920	Nut – Set	1
2	67–4660	Bolt – Flange	1
3	42–9440	Bolt w/Washer	1
4	54–8660	Washer – Flat	1
5	67–4820	Bolt Set	1
6	75–4940	Brace – Generator	1
7	67–4840	Screw – Set	1
8	67–4850	Bearing – Front	1
9	67–4830	Front Bracket Assembly (Incl. Ref. #7 & 8)	1
10	67–4860	Rotor Assembly (Incl. Ref. #11)	1
11	67–4870	Bearing – Rear	1
12	67–4670	Nut	1
13	67–3260	Washer – Lock	1
14	42–9660	Washer – Flat	1
15	72–6140	Cover – Rear	1

Ref. No.	Part No.	Description	No. Used
16	67–4930	Rectifier Assembly	1
17	67–4910	Regulator Assembly (Incl. Ref. #18 & 19)	1
18	43–0510	Spring – Brush	2
19	67–4920	Brush	2
20	67–4900	Terminal Set	1
21	67–4880	Stator Assembly	1
22	67–4640	Bolt	1
23	67–4810	Pulley Set	1
24	67–4620	Spacer	1
25	43–0370	Shim	5
26	67–4890	Rear Bracket Assembly (Incl. Ref. #15–20)	1
*	67–4630	Alternator Assembly (Incl. Ref. #1–25)	1

*Not Illustrated

INTERNATIONAL DECAL CROSS REFERENCE

JAPANESE DECAL KIT NO. 93–8951

DESCRIPTION	LOCATION	PART NUMBER	
		EUROPE	JAPANESE
DECAL LOAD RATING	UNDER RIGHT SIDE OF DASH	94–1225	94–1228
DECAL FUSE BLOCK	UNDER RIGHT SIDE OF DASH	93–9851	92–5374
DECAL SUPERVISOR	ON DASH	93–9856	92–5332
DECAL DASH (DIESEL)	ON DASH	93–1211	94–1227
DECAL DASH (GAS)	ON DASH	94–1223	94–1226
DECAL CAUTION FUEL	ON SKIRT	93–9448	92–5325
DECAL AXLE RANGE	ON CONSOLE	93–9857	92–5318
DECAL PTO	ON CONSOLE	93–9861	92–5360
DECAL DIFFERENTIAL LOCK	ON CONSOLE	93–9430	92–5311
DECAL REMOTE HYDRAULICS	ON CONSOLE	93–9866	92–5346
DECAL DUMP HYDRAULICS	ON CONSOLE	93–9444	92–5353
DECAL PARKING BRAKE	ON CONSOLE	93–9443	92–5304
DECAL QUICK REF. (DIESEL)	ON REAR OF SKIRT	87–9110	94–1206
DECAL QUICK REF. (GAS)	ON REAR OF SKIRT	87–9100	94–1218

DESCRIPTION	LOCATION	PART NUMBER	
		EUROPE	JAPANESE
DECAL DANGER	ON FRONT OF SKIRT	93–9860	92–6408
DECAL ROLLOVER	ON ROPS	93–9850	92–5388
DECAL ROPS	ON ROPS	93–9859	92–5381
DECAL DANGER BED SUPPORT	ON LIFT CYLINDERS AND BED SUPPORT	93–9852	92–6415
DECAL WARNING SPRING LOADED	ON SPRING CRADLE	93–9879	92–6493
DECAL CAUTION HOT SURFACE	ON LEFT REAR FRAME RAIL	93–8071	92–6479
DECAL ATF	ON REAR AXLE TUBE	93–9442	92–5473
DECAL DANGER	ON REAR AXLE TUBE	93–9862	92–5367
DECAL GREASE DRIVE SHAFTS	ON REAR AXLE TUBE	93–9449	92–6444
DECAL WARNING	ON FAN SHROUD	93–6681	92–7240
DECAL WARNING ROTATING MEMBER	ON FAN SUPPORT	93–7814	83–6030
DECAL CAUTION	ON FAN SUPPORT	93–9447	93–3766
DECAL NO STEP	ON BATTERY COVER	93–6687	84–2780
DECAL STARTING FLUID (DIESEL)	IN FRONT OF RADIATOR	93–7275	84–6660

TORO PART NUMBER INDEX

Part No.	Description	Pg. No.	Ref. No.	Qty.
111071	Bumper	14	4	2
116749	Horn Assembly	1	21	1
146489	Rivet – Pop	1	28	8
5–3637	Washer – Flat	44	7	1
5–3637	Washer – Flat	34	16	1
12–5450	Screw – Hex. Hd.	43	11	4
18–1720	Joint – Ball	34	49	1
18–2830	Horn Switch Assembly	2	31	1
18–4260	Assy. – Screw/Lockwasher	6	9	2
18–4270	Clamp – Ball Return Guide	6	8	1
18–4340	Plug – Rack Piston End	6	6	1
18–5160	Seal Kit – Pitman Shaft	7	*	1
18–5170	Seal Kit – Valve Ring	7	*	1
18–5180	Bearing Kit – Lower Thrust	7	*	1
18–5190	Ball – Chrome Alloy	6	10	11
19–4050	Knob	42	8	2
19–4050	Knob	30	34	3
20–7150	Toggle Switch Assembly	3	62	1
21–0360	Nut	9	6	1
21–1830	Spring – Extension	8	30	1
21–7670	Case – Differential	20	27	1
21–7690	Gear – Pinion	20	6	2
21–7700	Shaft – Pinnion	20	25	1
21–7720	Washer – Thrust	20	4	2
21–7730	Washer – Thrust	20	7	2
21–7770	Screw – Cap Hex. Hd.	20	26	5
21–8090	Shim – .003	20	31	A/R
21–8100	Shim – .005	20	*	A/R
21–8110	Shim – .010	20	*	A/R
21–8120	Shim – .030	20	*	A/R
21–8270	Pin – Alignment	20	3	2
21–9260	Spacer	5	4	1
22–8330	Plug	49	1	2
22–8340	Spring	49	3	2
22–8350	Ball	49	4	2
22–8360	Pin – Cam	49	6	2
22–8370	Seat–Check Valve	49	5	2
22–8380	Retainer – Spring	49	10	2
22–8410	Spring	49	11	1
22–8420	Spool	49	8	1
22–8480	Ring – Retaining, Spool	49	13	1
22–8490	Ring – Retaining	49	14	1
22–8500	O–Ring	49	9	2
23–3030	Spacer	49	12	1
23–7270	Nut – Lug	23	1	10
23–7270	Nut – Lug	27	18	10
24–7922	Conduit – Hose (CE)	47	36	1
24–7923	Conduit – Hose (CE)	47	35	2
26–0071	Bumper	1	9	2
27–2360	Ignition Switch Assembly	2	43	1
27–5360	Hose – Fuel	43	12	2
27–5360	Hose – Fuel	34	13	1
27–6590	Spacer – Thick	32	7	4
27–6600	Spacer – Thin	32	3	4
28–8200	O–Ring	6	27	1
28–8210	Bolt – Flange Hex. Hd.	6	17	4
28–8220	Nut – Lash Adjuster	6	16	1
28–8270	Seal Service Kit – End Plug	7	*	1
28–8280	Seal Kit – Side Cover	6	14	1
28–8290	Seal Service Kit	7	*	1
33–1300	Assembly – Element	45	5	1
33–1310	Baffle	45	8	1
33–1330	Assembly – Nut	45	6	1
33–1340	Clamp Assembly	45	7	1
33–1350	Band Assembly	45	3	2
33–3090	Bushing – Flange	18	7	4
36–3400	Decal – No Step (US)	42	10	1
36–4790	Washer – Thrust	34	39	3
39–7310	O–Ring	6	35	3
39–7310	Seal – O–Ring	46	29	2
39–7420	Washer – Lock	5	22	1
39–7420	Washer – Lock	6	42	1
39–7440	Nut – Lock	5	23	1
39–7440	Nut – Pitman Arm	6	41	1
42–3560	Screw – Shoulder	16	15	1
42–7080	Cap	51	2	2
42–7160	Pin – Dowel	57	46	1
42–7190	Bushing	57	33	2
42–7210	Plug	55	19	1
42–7290	Gasket – Oil Drain	55	16	2
42–7510	Pipe	54	4	1
42–7510	Pipe	54	9	1
42–7840	Key	51	20	1
42–7860	Lock	52	33	12
42–7870	Seal	52	30	6
42–8240	Gasket	58	6	3
42–8690	Metal – Sealing	60	37	1
42–8700	Wire	60	38	1
42–8830	O–Ring	60	6	1
42–8830	O–Ring	60	10	1
42–9110	Gasket	54	21	1
42–9110	Gasket – Muffler	34	25	1
42–9250	Screw – Cap Hex. Hd.	12	43	2
42–9260	Plug	55	15	1
42–9420	Bolt	60	33	4
42–9430	Bolt w/Washer	54	7	1
42–9430	Bolt w/Washer	60	12	2
42–9440	Bolt & Washer	34	54	1
42–9440	Bolt W/Washer	52	25	4
42–9440	Bolt w/Washer	62	3	1
42–9440	Bolt w/Washer	55	8	11
42–9440	Screw – Cap Hex. Hd.	34	1	3
42–9490	Bolt w/Washer	56	10	4
42–9490	Bolt w/Washer	51	11	2
42–9490	Bolt w/Washer	55	18	18
42–9510	Bolt	52	42	1
42–9530	Screw – Cap Hex. Hd.	37	10	25
42–9530	Screw – Cap Hex. Hd.	12	21	9
42–9570	Stud	54	20	4
42–9570	Stud – Muffler	34	24	4
42–9580	Nut – Lock	34	33	2
42–9590	Nut	52	17	6
42–9640	Nut – Jam	60	9	2
42–9650	Nut – Jam	57	30	1
42–9660	Washer	52	39	4
42–9660	Washer – Flat	62	14	1
42–9850	Washer – Lock	12	20	12
42–9850	Washer – Lock	40	21	3
42–9850	Washer – Lock	34	26	4
42–9850	Washer – Lock	37	32	42
43–0370	Shim	62	25	5
43–0510	Spring – Brush	62	18	2
43–1920	Nut – Set	62	1	1
43–1950	Valve	47	9	1
43–2550	Filter	43	26	1
43–2560	Gasket	43	25	1
43–2570	Gasket	43	27	1
43–2580	Magnet	43	24	1
43–2710	O–Ring	54	36	2
43–2820	Cap	60	32	1
43–2820	Cap – Sealing	53	47	1
43–3160	Screw – Adjusting	52	44	1
43–5150	Piston	48	11	1
43–5920	Washer – Lock	34	17	1
43–5960	Nut – Special	53	46	1
43–5970	Nut	43	35	2
43–6550	Ring – Retaining	5	10	2
43–6710	Shim – .003	20	14	A/R

*Not Illustrated

TORO PART NUMBER INDEX (Cont.)

Part No.	Description	Pg. No.	Ref. No.	Qty.
43–6711	Shim – .005	20	*	A/R
43–6712	Shim – .010	20	*	A/R
43–6713	Shim – .030	20	*	A/R
43–6750	Cup – Bearing	20	10	1
43–6760	Cone – Bearing	20	9	1
44–0760	Decal – Warning (US)	18	33	2
44–2230	Disc – Rubber	32	4	2
46–3710	Fitting – 90°	43	21	2
46–8091	Screw – Hex. Flange Hd.	30	10	4
48–7560	Screw – Cap Hex. Hd.	37	24	1
48–7650	Screw – Cap Hex. Hd.	43	1	2
48–7660	Screw – Cap Hex. Hd.	34	51	2
48–7700	Screw – Cap Hex. Hd.	40	9	3
48–7700	Screw – Cap Hex. Hd.	34	23	6
48–7730	Screw – Cap Hex. Hd.	37	18	5
48–7740	Screw – Cap Hex. Hd.	5	15	4
48–7880	Nut – Lock	34	18	1
48–7930	Nut	34	27	4
48–7930	Nut – Hex.	37	2	1
48–8000	Washer – Lock	43	34	2
48–8010	Washer – Lock	34	52	2
48–8070	Washer – Flat	5	6	1
48–9520	Nut – Lock	26	28	2
48–9520	Nut – Lock	35	50	3
48–9590	Washer – Lock	34	29	10
49–7810	Nut – Lock	43	36	2
49–9150	Washer – Flat	16	2	1
49–9150	Washer – Flat	15	36	1
51–5610	Pin – Alignment	34	20	3
51–5610	Pin – Dowel	52	26	3
52–1570	Bolt Set	61	8	1
52–2890	Bushing – Flange	8	24	2
53–8150	Fuel Pump Assembly	43	28	1
53–8150	Pump Assembly	59	*	1
54–0110	Element – Oil Filter	35	38	1
54–8660	Washer – Flat	62	4	1
54–9180	Cross & Bearing Kit	21	2	2
55–7120	Switch – Brake Light	8	9	1
56–0020	Plug	57	12	3
56–0020	Plug	51	24	3
56–0020	Plug – Expansion	54	18	1
56–0100	Plug	57	37	1
56–0220	Pin	57	35	2
56–0480	Key – Woodruff	51	8	1
56–0480	Key – Woodruff	52	18	2
56–1230	Shaft – Oil Filter	57	28	1
56–1580	Armature Set	61	23	1
56–1590	Bearing – Front	61	22	1
56–1600	Bearing – Rear	61	21	1
56–1610	Bolt	61	16	1
56–1640	Stopper Set	61	13	1
56–1670	Gear	61	10	1
56–1680	Cover Set	61	9	1
56–1700	Brush Holder Assembly	61	18	1
56–1710	Spring – Brush	61	19	4
56–1720	Assy. – Bracket (Rear)	61	17	1
56–7973	Clamp – Hydraulic Tube	46	17	4
57–6380	Screw – Cap Hex. Hd.	12	27	3
58–4250	Magnet	30	11	2
60–6750	Screw – Cap Hex. Hd.	37	4	11
62–5550	Decal – TORO	1	2	1
62–7650	Gasket – Sending Unit	44	3	1
63–7440	Solenoid – Shutoff	53	49	1
63–7640	Unit – Sending	44	4	1
63–7790	Screw – Cap Hex. Hd.	34	28	12
63–8140	Pulley	30	19	1
63–8280	Head – Filter	43	16	1
63–8290	Vent – Air	43	17	1
63–8300	Element – Filter	43	18	1
63–8310	Drain – Filter	43	19	1
63–8360	Key – Ignition	2	10	1
63–9230	Battery	42	7	1
63–9640	Hose – Fuel	44	12	1
63–9640	Hose – Fuel Tank to Pump	43	23	1
64–4430	Gasket – Thermostat	34	43	1
65–5100	Handle	30	9	2
65–5220	Screw – Hex. Socket Hd.	15	40	3
65–5360	Spring – Extension	5	35	1
66–3160	Screw – Cap Hex. Hd.	12	6	4
66–3160	Screw – Cap Hex. Hd.	35	24	7
66–3160	Screw – Cap Hex. Hd.	12	39	4
66–3240	Cap – Radiator	30	12	1
66–6840	Decal – Caution (US)	26	29	2
66–8700	Glow Plug Indicator Assy.	43	32	1
66–8800	Relay	43	10	1
67–1450	Spring	34	48	1
67–2200	Seal	51	4	4
67–2210	Plug	57	36	3
67–2220	Guide	57	8	1
67–2230	Oil Seal	57	14	1
67–2250	Bolt	51	5	8
67–2270	Case	57	15	1
67–2280	Gasket	57	13	1
67–2290	Cover	57	10	1
67–2300	Gasket	57	9	1
67–2310	Plate	55	6	1
67–2320	Gasket – Plate	55	7	1
67–2330	Bolt	56	3	2
67–2330	Bolt	57	16	6
67–2330	Bolt	54	34	4
67–2340	Bolt w/Washer	55	3	3
67–2340	Bolt w/Washer	57	11	2
67–2340	Bolt w/Washer	54	17	2
67–2350	Plug	57	25	1
67–2360	Bushing	57	26	2
67–2370	Bushing	57	32	1
67–2380	Bushing	57	27	3
67–2390	Plug	57	24	1
67–2410	Bearing Set 0.25	51	*	1
67–2420	Bearing Set 0.50	51	*	1
67–2440	Bolt w/Washer	57	22	6
67–2450	Dipstick	57	5	1
67–2480	Gasket – Oil Pan	55	17	1
67–2500	Plunger	55	25	1
67–2510	Spring	55	26	1
67–2520	Plug	55	28	1
67–2530	Gear – Inner	55	12	1
67–2540	Gear – Outer	55	11	1
67–2550	Housing – Oil Pump	55	10	1
67–2560	Bolt w/Washer	55	9	3
67–2570	Plug	55	29	1
67–2570	Plug – Taper	54	19	1
67–2580	Gasket – Case	55	2	1
67–2590	Oil Seal	55	23	1
67–2600	Bolt	56	5	1
67–2600	Bolt	55	21	3
67–2610	Bolt	56	9	2
67–2610	Bolt	55	22	4
67–2620	Bolt	55	24	1
67–2630	O–Ring	55	20	2
67–2640	Cap	55	30	1
67–2650	Oil Fill Cap Assembly	55	32	1
67–2650	Oil Filler Cap Assembly	54	11	1
67–2660	O–Ring	55	31	1
67–2660	Seal – O–Ring	54	10	1
67–2670	Hose – Breather	54	8	1
67–2680	Hanger – Engine	54	16	2
67–2700	Guide – Valve	54	42	6

*Not Illustrated

TORO PART NUMBER INDEX (Cont.)

Part No.	Description	Pg. No.	Ref. No.	Qty.
67–2710	Cap – Sealing	54	41	3
67–2730	Bolt	54	43	8
67–2740	Bolt – Flange	54	15	3
67–2750	Cover Assembly	54	6	1
67–2760	Gasket	54	14	1
67–2770	Nut – Cap	54	12	2
67–2780	Washer	54	13	2
67–2850	Connecting Rod Assembly	52	9	3
67–2860	Bolt	52	12	6
67–2890	Bearing Set 0.25 US	52	*	3
67–2900	Bearing Set 0.50 US	52	*	3
67–2940	Nut – Jam	52	22	1
67–2950	Washer	52	20	1
67–2960	Washer – Lock	52	21	1
67–2980	Gear – Ring	52	15	1
67–2990	Bolt	52	14	4
67–3000	Washer	51	10	2
67–3010	Cam Shaft	51	7	1
67–3030	Bearing	51	9	2
67–3050	Bearing	51	22	1
67–3060	Shaft	51	21	1
67–3080	Ring – Retaining	51	23	1
67–3100	Retainer	52	32	6
67–3110	Spring	52	31	6
67–3120	Tappet	52	6	6
67–3130	Valve – Intake	52	28	3
67–3140	Valve – Exhaust	52	29	3
67–3150	Rod – Push	52	5	6
67–3160	Arm – Rocker	52	1	6
67–3170	Spring	52	40	2
67–3180	Cap	52	34	6
67–3190	Rocker Shaft Assembly	52	38	1
67–3200	Stay – Rocker	52	35	3
67–3210	Screw – Adjusting	52	4	6
67–3220	Pin	52	37	1
67–3230	Nut – Jam	52	2	6
67–3240	Ring – Retaining	52	3	2
67–3250	Bolt – Rockers Stay	52	43	2
67–3260	Washer	60	8	2
67–3260	Washer	52	41	6
67–3260	Washer – Lock	62	13	1
67–3280	Shim 0.2	57	38	1
67–3290	Shim 0.3	57	*	1
67–3300	Shim 0.5	57	*	1
67–3310	Shim 0.4	57	*	1
67–3320	Shim 0.6	57	*	1
67–3330	Shim 0.7	57	*	1
67–3340	Shim 0.8	57	*	1
67–3350	Shim 0.9	57	*	1
67–3360	Shim 1.0	57	*	1
67–3370	Bolt w/Washer	57	39	4
67–3380	Nozzle & Holder Assembly	59	*	3
67–3380	Nozzle & Holder Assembly	57	6	1
67–3390	Gasket	57	7	3
67–3400	Pipe No. 1 Assembly	57	42	1
67–3410	Pipe No. 2 Assembly	57	43	1
67–3420	Assy. – Pipe No. 3	57	1	1
67–3430	Nut	57	2	3
67–3440	Gasket	57	4	3
67–3460	Sub–Assy. – Housing	58	9	1
67–3470	Holder – Delivery Valve	58	3	3
67–3480	O–Ring	58	4	3
67–3490	Spring	58	5	3
67–3500	Sub–Assy. – Valve	58	7	3
67–3520	Sub–Assy. – Sleeve	58	10	3
67–3530	Seat	58	11	3
67–3540	Spring	58	12	3
67–3550	Seat	58	13	3
67–3560	Plate – Shim 1.85	58	14	1
67–3570	Plate – Shim 1.9	58	*	1
67–3580	Plate – Shim 1.95	58	*	1
67–3590	Plate – Shim 2.0	58	*	1
67–3600	Plate – Shim 2.05	58	*	1
67–3610	Plate – Shim 2.1	58	*	1
67–3620	Plate – Shim 2.15	58	*	1
67–3630	Plate – Shim 2.2	58	*	1
67–3640	Plate – Shim 2.25	58	*	1
67–3650	Plate – Shim 2.3	58	*14	1
67–3660	Plate – Shim 2.35	58	*	1
67–3670	Plate – Shim 2.4	58	*	1
67–3680	Plate – Shim 2.45	58	*	1
67–3690	Plate – Shim 2.5	58	*	1
67–3700	Tappet Assembly	58	15	3
67–3710	Screw – Air Bleed	58	24	1
67–3720	Washer	58	23	1
67–3730	Screw	58	22	1
67–3740	Nipple	58	21	1
67–3750	Washer	58	20	2
67–3760	Plate – Lock	58	2	3
67–3770	Screw w/Washer	58	1	3
67–3780	Rack Assembly	58	19	1
67–3790	Screw	58	17	2
67–3800	Bracket	58	18	1
67–3810	Pin	58	16	3
67–3830	Washer 1.25	59	31	1
67–3840	Washer 1.3	59	*	1
67–3850	Washer 1.35	59	*	1
67–3860	Washer 1.4	59	*	1
67–3870	Washer 1.45	59	*	1
67–3880	Washer 1.5	59	*	1
67–3890	Washer 1.55	59	*	1
67–3900	Washer 1.6	59	*	1
67–3910	Washer 1.65	59	*	1
67–3920	Washer 1.7	59	*	1
67–3930	Spring	58	30	3
67–3940	Pin	58	29	3
67–3950	Piece	58	28	3
67–3960	Nozzle Assembly	58	27	3
67–3970	Nut	58	25	3
67–3980	Gasket	58	26	3
67–3990	Lever Assembly	60	1	1
67–4000	Pin	60	2	2
67–4010	Stopper	60	15	1
67–4030	Rod – Tie	60	23	1
67–4040	Weight Assembly	60	13	1
67–4050	Shaft	60	19	1
67–4060	Governor Lever Assembly	60	18	1
67–4070	Sliding Shaft Assembly	60	16	1
67–4080	Clip	60	24	1
67–4090	Tension Lever Assembly	60	21	1
67–4110	Cover Assembly	60	*	1
67–4120	Pin	60	35	1
67–4130	Cover – Governor	60	4	1
67–4140	Stop Lever Assembly	60	11	1
67–4150	Lever – Stop	60	40	1
67–4160	Gasket	60	5	1
67–4180	Nut	60	31	1
67–4190	Spring – Torque	60	28	1
67–4200	Nut – Special	60	30	1
67–4210	Case – Torque Spring	60	26	1
67–4220	Screw – Adjusting	60	29	1
67–4230	Stopper	60	27	1
67–4250	Cover	53	48	1
67–4270	Bolt	60	3	4
67–4280	Bolt w/Washer	60	17	1
67–4290	Nut	60	34	4
67–4310	Gasket	52	23	1
67–4330	Oil Filter Assembly	57	40	1

*Not Illustrated

TORO PART NUMBER INDEX (Cont.)

Part No.	Description	Pg. No.	Ref. No.	Qty.
67–4340	Screen Assembly	57	31	1
67–4350	Oil Pressure Switch	56	8	1
67–4360	Pulley	56	1	1
67–4380	Pump Assembly	56	6	1
67–4390	Gasket	56	7	1
67–4400	Bolt	54	1	2
67–4400	Bolt	56	4	1
67–4410	V–Belt	56	2	1
67–4460	Gasket (Thermostat Fitting)	54	31	1
67–4470	Bolt	54	33	1
67–4480	Pipe – By–Pass	54	37	1
67–4510	Gauge Nut – Water Temp.	54	35	1
67–4520	Pipe	54	2	1
67–4530	Sub–Assy. Cover (Intake)	54	5	1
67–4540	O–Ring	54	3	1
67–4550	Gasket – Intake Manifold	54	44	1
67–4570	Gasket – Exhaust Manifold	54	26	1
67–4590	Bolt	54	23	6
67–4620	Spacer	62	24	1
67–4630	Alternator Assembly	62	*	1
67–4640	Bolt	62	22	1
67–4660	Bolt – Flange	62	2	1
67–4670	Nut	62	12	1
67–4690	Plate – Glow Plug	54	40	1
67–4720	Lever Assembly	61	4	1
67–4730	Spring Set	61	5	1
67–4750	Switch Assembly	61	7	1
67–4760	Shaft Assembly	61	15	1
67–4770	Pinion Set	61	14	1
67–4780	Gear Set	61	12	1
67–4790	Shaft Assembly	61	11	1
67–4800	Yoke Assembly	61	20	1
67–4810	Pulley Set	62	23	1
67–4820	Bolt Set	62	5	1
67–4830	Front Bracket Assembly	62	9	1
67–4840	Screw – Set	62	7	1
67–4850	Bearing – Front	62	8	1
67–4860	Rotor Assembly	62	10	1
67–4870	Bearing – Rear	62	11	1
67–4880	Stator Assembly	62	21	1
67–4890	Rear Bracket Assembly	62	26	1
67–4900	Terminal Set	62	20	1
67–4910	Regulator Assembly	62	17	1
67–4920	Brush	62	19	2
67–4930	Rectifier Assembly	62	16	1
67–5040	Spring	60	20	1
68–9950	Spring – Extension	35	44	1
70–1480	Relay – S.P.D.T.	43	9	1
70–8560	Retainer – Indicator	43	31	1
70–8680	Pulley – Crankshaft	52	19	1
70–8700	Pipe – Fuel Return	57	3	1
70–8720	Spring – Tie Rod	60	22	1
70–8750	Manifold – Exhaust	54	24	1
70–8760	Starter Assembly	61	1	1
70–8770	Front Bracket Assembly	61	3	1
70–8780	Center Bracket Assembly	61	6	1
71–3381	Tube – Overflow	30	1	2
71–3383	Hose – Overflow	30	4	1
71–4330	Seal – Oil	20	20	1
71–4340	Washer	20	17	1
71–4350	Nut – Lock	20	18	1
71–5320	Washer – Flat	16	18	1
72–4310	Switch – Ball N.C.	35	46	1
72–6140	Cover – Rear	62	15	1
74–0720	Tube – Manual	14	1	1
75–4706	Hose	34	14	1
75–4706	Hose – Fuel	44	11	1
75–4900	Bearing Set STD	51	3	1
75–4910	Oil Pan Assembly	55	14	1
75–4930	Lever – Governor Spring	60	7	1
75–4940	Brace – Generator	62	6	1
75–4970	Sub–Assy. – Element	58	8	3
75–4990	Spring	60	25	1
75–5000	Body Sub–Assy.	59	32	3
75–5010	Bearing Set STD	52	8	3
75–5020	Pump Assembly	57	41	1
75–5040	Gasket Kit	55	*	1
75–5050	Ring Set STD	52	11	3
75–5060	Ring Set 0.25 OS	52	*	3
75–5070	Ring Set 0.50 OS	52	*	3
75–5110	Cover Assembly	52	24	1
75–5120	Gasket	53	45	1
75–6820	Hourmeter	2	16	1
75–9610	Spacer	46	7	1
76–2290	Spacer	16	37	1
76–4430	Fitting – Fuel 90°	44	9	1
76–8750	Plate – Warning	30	16	1
76–9100	Spacer	33	17	6
76–9100	Spacer – Hi–Lo Lever	15	35	1
80–6990	Washer	27	39	4
80–6990	Washer – Flat	35	49	3
80–8040	Decal – Caution (US)	32	1	1
83–9150	Decal – Starting Fluid (US)	30	33	1
84–1680	Ring – Retaining	48	7	1
84–1880	Fan	30	29	1
87–0150	Tower – Control Arm RH	18	9	1
87–0160	Tower – Control Arm LH	18	*	1
87–0210	Arm – Control Lower RH	19	32	1
87–0220	Arm – Control Lower LH	19	*	1
87–0650	Fuel Tank Assembly	44	2	1
87–0660	Hose – Reservoir Rear	8	17	1
87–0670	Hose – Reservoir Front	8	16	1
87–0690	Spring – Compression	18	15	2
87–0710	Hood	1	1	1
87–0710	Trim	14	24	1
87–0740	Key – Supervisor Switch	2	17	1
87–1430	Joint – Upper Ball	19	35	2
87–1450	Bushing – Flange	19	4	8
87–1470	Tie Rod End Assembly	23	20	2
87–1480	Tie Rod End Assembly	23	27	2
87–1490	Spring – Leaf	26	15	2
87–1500	Steering Gear (Complete)	7	*	1
87–1500	Steering Gear Assembly	5	20	1
87–1720	Nut – Supervisor Switch	2	18	1
87–1840	Drum – Brake	27	15	2
87–1910	Pin – Alignment	12	13	2
87–1920	Seal – Shaft	12	8	2
87–1970	Bearing Matched Set	27	20	2
87–2040	Lever – Shift	15	16	1
87–2080	Screw – Cap Hex. Hd.	23	3	10
87–2080	Stud – Drive	27	12	10
87–2100	Bearing – Release	12	26	1
87–2110	Tail Light Assembly	50	10	1
87–2120	Headlight Assembly	1	3	2
87–2240	Housing – Axle	27	7	2
87–2260	Boot – Shift Lower	15	28	1
87–2280	Bearing	5	25	3
87–2310	Clevis – Cable	35	36	3
87–2310	Clevis – Cable	15	47	2
87–2420	Seal – Ball Joint	19	7	4
87–2440	Bumper	1	7	2
87–2480	Link – Stabilizer	18	24	2
87–2500	Sleeve –Spring Pivot	18	12	2
87–2510	Bracket – Seat Frame	14	11	2
87–2520	Tube – Pivot	15	21	1
87–2540	Pedal – Brake	8	4	1
87–2590	Shaft – Brake Pedal	8	46	1
87–2610	Pedal – Clutch	12	37	1

*Not Illustrated

TORO PART NUMBER INDEX (Cont.)

Part No.	Description	Pg. No.	Ref. No.	Qty.
87–2640	Support – Master Cylinder	8	19	1
87–2650	Gusset	8	21	1
87–2660	Support – Pedal LH	8	18	1
87–2670	Pedal – Accelerator	8	36	1
87–2710	Lever – Parking Brake	16	29	1
87–2720	Driveshaft	32	10	1
87–2750	Spacer – Bearing	32	12	1
87–2880	Shaft – Accelerator Pedal	8	45	1
87–2890	Cradle – Reservoir	8	14	1
87–2900	Spring – Compression	15	24	1
87–2910	Support – Pedal RH	8	3	1
87–3000	Rim – Rear 23	27	*	2
87–3030	Master Cylinder Assembly	8	35	1
87–3040	Brake Fluid Reservoir Assy.	8	11	1
87–3060	Washer – Flat	27	25	2
87–3060	Washer – Flat	23	35	2
87–3070	Cable – Battery Pos.	34	34	1
87–3080	Cable – Battery Neg.	42	23	1
87–3110	Absorber – Shock	18	29	2
87–3110	Shock Absorber	26	8	2
87–3120	Steering Column & Shaft	5	*	1
87–3130	Lever – Tilt Steering	5	36	1
87–3140	Support – Rear	44	15	1
87–3150	Support – Front	44	27	1
87–3160	Strap – Tank Support	44	29	2
87–3170	Pad – Tank Support Strap	44	30	2
87–3250	Mount – Bearing	5	26	3
87–3270	Tube – Brake RH	26	3	1
87–3280	Tube – Brake LH	26	22	1
87–3290	Tire – Rear 23	27	*	2
87–3300	Tire	23	34	2
87–3310	Clip – Brake Cable	23	4	2
87–3310	Clip – Brake Cable	27	8	2
87–3370	Pulley	32	13	1
87–3400	Wheel & Tire Assembly	23	*	2
87–3410	Housing – Thermostat	34	44	1
87–3450	Plug	23	29	2
87–3460	Boot – Tilt Steering	5	2	1
87–3470	Bumper – Spring	26	14	2
87–3480	Plate – Brake Equalizer	16	22	1
87–3520	Clevis	15	27	1
87–3530	Button – Shifter	15	29	1
87–3540	Link – Shift	15	20	2
87–3560	Tee – Brake Line	10	18	1
87–3560	Tee – Brake Tube	26	23	1
87–3570	Fitting – Union	10	6	2
87–3580	Retainer	26	4	2
87–3580	Retainer	19	9	2
87–3580	Retainer	23	11	2
87–3580	Retainer – Brake Hose	27	2	2
87–3580	Retainer – Brake Hose	10	8	2
87–3590	Seal – Bearing	27	22	2
87–3600	Spacer	18	3	10
87–3610	Bracket – Detent	5	34	1
87–3650	Pin – Shift	15	18	1
87–3660	Spring – Compression	15	30	1
87–3670	Hose – Hydraulic	47	21	1
87–3670	Hose – Hydraulic	36	54	1
87–3680	Assembly – Relief Valve	46	*	1
87–3710	Overflow Reservoir Assembly	30	3	1
87–3720	Retainer – Cylinder	47	17	2
87–3750	Cover – Steering Wheel	5	9	1
87–3760	Plate – Shift Boot	13	14	1
87–3770	Bushing – Sleeve	12	9	2
87–3780	Box – Glove	2	3	1
87–3790	Switch – Light	2	19	1
87–3800	Bracket – Seat Bottom	13	3	3
87–3820	Wheel – Steering	5	7	1
87–3830	Brake Assembly RH	27	*	1
87–3830	Rear Brake Assembly – RH	29	*	1
87–3840	Brake Assembly LH	27	9	1
87–3840	Rear Brake Assembly – LH	29	*	1
87–3850	Bar – Anti–Sway	18	17	1
87–3860	Link – Anti–Sway Bar	18	5	2
87–3890	Bracket – Anti–Sway Bar	18	18	2
87–3910	Bushing – Anti–Sway Bar	18	19	2
87–3920	Bushing – Rubber	18	4	16
87–3920	Bushing – Rubber	26	7	8
87–3940	Mount – Spring RH	26	*	1
87–3960	Mount – Spring LH	26	18	1
87–3980	Shackle – Spring	26	11	4
87–3990	Oil Strainer Assembly	35	26	1
87–4010	Clamp – Anti–Sway Bar	18	20	2
87–4030	Supervisor Switch Assembly	2	29	1
87–4050	Hose – Air Cleaner	44	19	1
87–4050	Hose – Air Intake	34	11	1
87–4060	Spacer – Bearing	27	21	2
87–4070	Bumper – Front	1	14	1
87–4080	Tube – Brake LH	27	6	1
87–4090	Tube – Brake RH	27	1	1
87–4100	Hose – Brake	27	3	2
87–4100	Hose – Brake	26	5	2
87–4110	Puck – Engine Adapter	34	41	1
87–4120	Driveshaft	32	5	1
87–4150	Hose – Radiator Lower	30	32	1
87–4150	Hose – Radiator Lower	34	35	1
87–4230	Harness – Wire Front LH	2	41	1
87–4250	Harness – Wire Rear	42	22	1
87–4260	Shift Cable Assembly	36	51	2
87–4340	Clamp – Cable	15	10	1
87–4350	Lever – Hi–Lo	15	2	1
87–4420	Hi–Lo Cable Assembly	36	52	1
87–4460	Differential Lock Cable	16	11	1
87–4470	Bracket	35	23	1
87–4490	Bracket – Hold–Down	46	22	1
87–4500	Rod – Pivot	46	2	1
87–4510	Rod – Connecting	46	3	1
87–4520	Bracket – Dump Valve	47	27	1
87–4560	Tube – Hydraulic	46	14	1
87–4560	Tube – Hydraulic	47	33	1
87–4690	Cover – Clutch	34	21	1
87–4700	Disc – Clutch	34	19	1
87–4710	Spacer – Barking Brake	16	13	1
87–4720	Plate – Steering Boot	5	3	1
87–4730	Guard – Belly	33	19	2
87–4760	Bushing	26	12	12
87–4790	Arm – Accelerator Pedal	8	38	1
87–4820	Bracket – Cable	35	27	1
87–4870	Hose – Hydraulic	47	4	1
87–4880	Hose – Hydraulic	47	3	1
87–4900	Hose – Hydraulic	47	31	1
87–4910	Hose – Hydraulic	47	13	1
87–4920	Hose – Hydraulic	35	41	1
87–4960	Clamp – Cable	15	42	1
87–4970	Engine Mount Assembly	19	17	4
87–4970	Engine Mount Assembly	33	13	2
87–4970	Transaxle Mount Assembly	35	18	2
87–5030	Lever – Differential Lock	16	3	1
87–5060	Cushion – Seat Bottom	13	7	2
87–5080	Spacer – Connecting	46	25	1
87–5100	Washer	35	17	4
87–5100	Washer – Flat	33	12	4
87–5100	Washer – Snubbing	19	18	8
87–5110	Support – Lower	42	17	1
87–5120	Bracket – Battery Base	42	13	1
87–5130	Cover – Battery Base	42	9	1
87–5140	Nut – Lock	46	8	1
87–5150	Screw – Cap Hex. Hd.	46	4	1

*Not Illustrated

TORO PART NUMBER INDEX (Cont.)

Part No.	Description	Pg. No.	Ref. No.	Qty.
87–5280	Shaft – Release	12	4	1
87–5300	Fork – Clutch	12	23	1
87–5320	Guide – Release	12	25	1
87–5330	Washer	18	2	8
87–5340	Seal Kit – Tie Rod End	23	*	4
87–5350	Bracket – Switch	12	14	1
87–5360	Lever	12	17	1
87–5370	Rear Tire & Wheel Assembly	28	*	2
87–5490	Switch – Neutral	12	15	1
87–5580	Fuel Gauge Assembly	2	15	1
87–5590	Temperature Gauge Assy.	2	8	1
87–5700	Hydraulic Pump Assembly	30	22	1
87–5730	Hose – Hydraulic	35	4	1
87–5770	U–Bracket – Tail Light	50	5	1
87–5800	Bracket – Mount	35	21	2
87–5870	Bracket – Cable	34	4	1
87–5910	Decal – Supervisor (US)	3	55	1
87–5920	Decal – Danger (US)	13	26	1
87–5930	Decal – Caution (US)	13	10	1
87–5940	Decal – Rollover (US)	17	2	1
87–5960	Decal – Axle Range (US)	13	11	1
87–5970	Decal – PTO (US)	13	16	1
87–5980	Decal – ROPS (US)	17	3	2
87–5990	Decal – PTO (US)	27	40	1
87–6000	Decal – Differential (US)	13	17	1
87–6010	Decal – Dump Hyd. (US)	13	19	1
87–6020	Decal – Parking Brake (US)	13	20	1
87–6040	Bracket – Shifter	15	22	1
87–6060	Decal – ATF (US)	27	4	1
87–6170	Frame – Seat	14	14	1
87–6240	Bracket – Seat Back	14	23	4
87–6270	Socket & Bulb Assembly	3	60	4
87–6280	Plate – Seat Back	14	18	2
87–6290	Cushion – Seat Back	14	17	2
87–6300	Lens	50	7	1
87–6310	Gasket	50	9	1
87–6320	Bulb – Headlight	1	5	2
87–6330	Lens – Headlight	1	6	2
87–6370	Rear Tire & Wheel Assembly	28	*	2
87–6410	Bracket – Harness	12	18	2
87–6570	Foam – Seal	15	38	1
87–6620	Screw	1	10	15
87–6620	Screw – Torx Hd.	12	42	2
87–6640	Lever – Dump Stop	16	14	1
87–6660	Fender – Rear 24	50	17	2
87–6670	Decal – Fuse Block (US)	3	54	1
87–6710	Switch – Supervisor	35	33	1
87–6720	Knob	15	17	1
87–6740	Tire – Rear 24	27	16	2
87–6750	Rim – Rear 24	27	19	2
87–6890	Hold – Hand	13	1	1
87–6900	Tube – Hydraulic	33	10	1
87–6910	Spring – Compression	35	13	1
87–6950	Receiver – LH	17	6	1
87–6960	Receiver – RH	17	7	1
87–7040	Bracket – Oil Filter	35	2	1
87–7050	Cap – Reservoir	30	43	1
87–7090	Assembly – Frame, R.O.P.S.	17	1	1
87–7110	Assembly – Axle, Rear	27	5	1
87–7150	Assembly – Cradle, Spring	18	13	2
87–7160	Assembly – Clevis, Cable	15	7	1
87–7170	Bracket – Clutch Spring	35	45	1
87–7270	Washer – Flat	27	23	6
87–7290	Fitting – Hydraulic	33	9	1
87–7330	Hose – Radiator Upper	30	7	1
87–7330	Hose – Radiator Upper	34	45	1
87–7350	Hose – Suction	33	6	1
87–7380	Bracket – Relay/Indicator	43	7	1
87–7440	Plate – Throttle	34	8	1
87–7470	Plate – Clamp	26	16	2
87–7480	Washer – Flat	26	31	8
87–7480	Washer – Flat	5	37	3
87–7520	Rim	23	33	2
87–7570	Retainer – Reservoir	8	12	1
87–7600	Rod – Battery Support	42	19	1
87–7610	Tab – Battery Support	42	21	1
87–7620	Shield – Plastic	42	12	1
87–7660	Clamp – Brake Line	10	2	8
87–7930	Decal – Danger (US)	14	6	1
87–7930	Decal – Warning (US)	47	32	2
87–7930	Decal – Warning (US)	48	13	1
87–7940	Stud	14	8	1
87–7950	Bed Support Assembly	14	7	1
87–7960	Lever – Shift Arm	35	48	2
87–7970	Arm – Shift	35	15	1
87–7990	Hydraulic Cylinder Assy.	47	16	2
87–8080	Console Plate Assembly	13	21	1
87–8110	Lever Support Assembly	15	14	1
87–8120	Bracket – Trim Side	1	11	2
87–8130	Bracket – Trim Top	1	19	1
87–8160	Trim	1	20	1
87–8250	Plate – Shift Arm	35	10	1
87–8440	Assembly – Rear Frame	26	2	1
87–8460	Bumper	12	34	1
87–8471	Bracket – Clutch	12	7	1
87–8500	Front Wire Harness Assy.	2	47	1
87–8550	Control Panel Assembly	2	53	1
87–8620	Boot – Shift	13	13	1
87–8640	Washer – Flat	15	26	1
87–8700	Screw – Cap Hex. Hd.	27	37	4
87–8710	Tab – Clutch	12	40	1
87–8780	Head – Oil Filter	35	43	1
87–8840	Engine	34	55	1
87–9080	Decal – Grease (US)	27	44	2
87–9110	Decal – Quick Ref. (EN)	13	23	1
87–9130	Decal – Workman 4300	1	15	1
87–9160	Lower Shaft Assembly	5	*	1
87–9170	Brake Assembly RH	23	5	1
87–9170	Front Brake Assembly – RH	24	*	1
87–9180	Brake Assembly LH	23	*	1
87–9180	Front Brake Assembly – LH	24	*	1
87–9190	Stub – Axle	23	31	2
87–9200	Bearing – Sealed	23	14	4
87–9210	Spacer	23	30	2
87–9220	Plug – Seal	22	2	1
87–9300	Door – Clean Out	30	35	1
87–9310	Hose – Air Cleaner	44	21	1
87–9320	Mudflap	1	26	2
87–9330	Bracket – Mudflap LH	1	23	1
87–9340	Bracket – Mudflap RH	1	*	1
87–9360	Seal – Oil	22	13	1
87–9370	Ring – Retaining	22	3	1
87–9390	Cup	45	9	1
87–9400	Valve	45	11	1
87–9410	Air Cleaner (Complete)	45	*	1
87–9410	Air Cleaner Assembly	44	23	1
87–9420	Decal – Caution (US)	30	36	1
87–9480	Fender – Front	13	24	2
87–9530	Transaxle Assembly	35	22	1
87–9600	Housing – Axle RH	23	28	1
87–9620	Housing – Axle LH	23	*	1
87–9640	Arm – Pitman	5	21	1
87–9650	Cover – Steering Gear	14	26	1
87–9810	Foam – Overflow Tank	30	37	1
87–9840	Shaft – Clutch	22	1	1
87–9890	Decal – Dash (US)	3	56	1
92–0650	Bearing – Ball	39	22	1
92–0651	Case – Transaxle	37	19	1

*Not Illustrated

TORO PART NUMBER INDEX (Cont.)

Part No.	Description	Pg. No.	Ref. No.	Qty.
92-0652	Cover – Upper	37	7	1
92-0653	Cover – Side	37	9	1
92-0654	Carrier – Differential	37	17	1
92-0655	Cover – Seal	37	30	1
92-0656	Cover – P.T.O.	37	1	1
92-0662	Cap – Oil	37	5	1
92-0663	Shaft – Main	39	16	1
92-0664	Hub – Synchro	39	12	2
92-0665	Key – Synchro	39	23	6
92-0666	Spring – Synchro	39	13	4
92-0667	Ring – Synchro	39	6	3
92-0668	Shifter – Synchro	39	7	2
92-0672	Gear – 18T	39	19	1
92-0673	Gear – 14T	39	21	1
92-0674	Shaft – Reduction	39	28	1
92-0677	Gear – 49T	39	31	1
92-0679	Gear – 23T	39	25	1
92-0680	Collar	39	26	1
92-0681	Bearing – Needle	39	30	2
92-0682	Washer – Thrust	39	29	1
92-0684	Gear – 33T	39	10	1
92-0687	Gear – 16T	39	18	1
92-0698	Shaft – Fork R-1	40	14	1
92-0699	Shaft – Fork 2-3	40	7	1
92-0700	Fork – Shift R-1	40	3	1
92-0701	Fork – Shift 2-3	40	6	1
92-0705	Lock – Spindle	40	20	1
92-0706	Cap – Fork Shaft	37	25	1
92-0708	Shaft – Fork Hi-Lo	40	16	1
92-0709	Fork – Shift Hi-Lo	40	17	1
92-0710	Counter Shaft Assembly	38	15	1
92-0710	Ring Gear Assembly	41	8	1
92-0711	Washer – Thrust	38	6	2
92-0712	Bearing – Ball	38	1	1
92-0713	Collar	38	13	1
92-0714	Bearing – Ball	38	14	2
92-0715	Gear – 49T	38	7	1
92-0716	Collar	38	3	1
92-0717	Gear – 71T	38	10	1
92-0718	Shifter – Hi-Lo	38	8	1
92-0719	Collar – Spline	38	9	1
92-0720	Case – Differential	41	31	1
92-0721	Fork – Differential Lock	41	17	1
92-0722	Shaft – Lock Fork	41	18	1
92-0723	Spring – Compression	41	19	1
92-0724	Arm – Differential Lock	41	27	1
92-0725	Shaft – Axle L.H.	41	28	1
92-0726	Shaft – Axle R.H.	41	1	1
92-0727	Washer	41	4	2
92-0728	Washer	41	2	1
92-0729	Seal – Oil	40	10	3
92-0730	Slider – Differential Lock	41	7	1
92-0731	Spring – Compression	40	2	3
92-0732	Plate – Keeper	40	8	3
92-0733	Washer	41	20	1
92-0740	Washer – Thrust	39	3	3
92-0741	Washer – Thrust	38	11	1
92-0743	Breather – Air	37	27	1
92-0744	Washer	41	14	1
92-0745	Gear – Side L.H.	41	24	1
92-0746	Gear – Side R.H.	41	11	1
92-0747	Washer – Thrust	41	10	2
92-0748	Gear – Pinion	41	12	2
92-0749	Shaft – Pinion	41	23	1
92-0750	Washer	41	13	2
92-0753	Ring – Retaining	39	2	1
92-0753	Ring – Retaining	41	21	1
92-0754	Ring – Retaining	39	20	1
92-0755	Ring – Retaining	38	12	1
92-0756	Ring – Retaining	41	5	3
92-0759	Ring – Retaining	37	22	1
92-0760	Ring – Retaining	37	15	1
92-0761	Ring – Retaining	40	18	1
92-0762	Washer – Lock	37	3	1
92-0763	Ring – Retaining	39	14	3
92-0764	Ring – Retaining	38	5	3
92-0765	Pin – Alignment	37	8	4
92-0765	Pin – Alignment	41	9	2
92-0768	Pin – Spring	41	15	2
92-0769	Pin – Spring	40	4	2
92-0770	Pin – Spring	41	26	1
92-0771	Pin – Spring	41	16	1
92-0772	Key	39	17	2
92-0773	Drain Plug Assembly	37	13	1
92-0775	Bearing – Ball	41	6	2
92-0775	Bearing – Ball	37	33	2
92-0776	Bearing – Ball	41	29	1
92-0778	Bearing – Ball	39	11	2
92-0780	Bearing – Ball	41	3	1
92-0781	Bearing – Needle	39	4	4
92-0782	Bearing – Needle	39	33	1
92-0783	Sleeve – Inner	38	4	1
92-0785	Ball	40	1	3
92-0787	O-Ring	37	12	1
92-0787	O-Ring	41	22	1
92-0788	O-Ring	37	6	1
92-0789	O-Ring	37	14	1
92-0790	O-Ring	37	29	1
92-0791	Seal – Oil	37	26	1
92-0793	Seal – Oil	37	16	2
92-0793	Seal – Oil	41	32	2
92-0796	Screw – Cap Hex. Hd.	37	31	5
92-0803	Screw – Hex. Flange Hd.	41	30	12
92-0804	Stud	37	28	1
92-0807	Cap – Sealing	37	23	1
92-0808	Shim Set	37	20	1
92-0809	Shim Set	37	11	1
92-0816	Arm – Shift Fork R-1	40	15	1
92-0817	Arm – Shift Fork 2-3	40	5	1
92-0818	Arm – Shift Fork Hi-Lo	40	19	1
92-0819	Gear – 40T	39	32	1
92-0820	Gear – 27T	39	5	1
92-0821	Gear – 24T	39	15	1
92-0822	Gear – 28T	39	24	1
92-0823	Gear – 43T	39	27	1
92-0824	Shaft – Reverse Idler	39	9	1
92-0827	Gear	51	12	1
92-0830	Plate – Rear	57	47	1
92-0831	Pin – Knock	57	48	1
92-0835	Gear	52	7	1
92-0836	Flywheel Assembly	52	13	1
92-0837	Fitting – Thermostat	54	32	1
92-0838	Spring Set	60	*	1
92-0839	Plate	51	14	1
92-0840	Gear	51	17	1
92-0841	Ring – Retaining	51	15	1
92-0842	Gear Assembly	51	13	1
92-0843	Bolt w/Washer	61	2	2
92-0844	Plug – Glow	54	39	3
92-0845	Crankshaft	52	16	1
92-1211	Decal – Dash (CE)	3	*	1
92-1773	Screw – Cap Hex. Hd.	20	11	4
92-1914	Bearing – Ball	52	27	1
92-2160	Cartridge – Relief Valve	46	12	1
92-2161	Body – Relief Valve	46	28	1
92-2162	Head	48	6	1
92-2163	Shaft	48	2	1
92-2165	Kit – Repair	48	*	1

*Not Illustrated

TORO PART NUMBER INDEX (Cont.)

Part No.	Description	Pg. No.	Ref. No.	Qty.
92–2173	Screw – Cap Socket Head	31	18	8
92–2174	Screw – Adjusting	31	22	1
92–2175	Gear	31	11	2
92–2176	Pin – Dowel	31	16	2
92–2177	Pin – Shear	31	7	1
92–2178	Ring – Crescent	31	4	4
92–2179	Key – Square	31	5	1
92–2180	Gasket – Copper	31	23	1
92–2181	Plate – Pressure	31	13	1
92–2182	Plate – Seal	31	9	1
92–2183	Plate – Wear	31	10	1
92–2184	Cap – Relief Valve	31	24	1
92–2185	Plug	31	19	1
92–2186	Spacer	31	3	1
92–2187	Housing – Gear, End	31	17	1
92–2188	Stator	31	8	1
92–2189	Shaft – Drive	31	6	1
92–2190	Shaft – Idler	31	25	1
92–2191	Bearing	31	27	1
92–2192	Bearing	31	12	4
92–2193	Ball	31	20	1
92–2194	Spring	31	21	1
92–2195	Seal – Oil	31	2	1
92–2196	Seal – Pressure Plate	31	15	1
92–2197	Seal – Back Up	31	14	1
92–2198	Seal	31	26	1
92–2199	Key – Ball	31	28	1
92–2379	Clamp – Hose	30	2	3
92–2379	Clamp – Hose	43	22	1
92–2379	Clamp – Hose	44	32	1
92–2609	Decal – Remote Hyd. (US)	13	18	1
92–2697	Hose – Hydraulic	47	1	1
92–4100	Backplate Assembly RH	24	*	1
92–4101	Primary Piston Assembly	9	11	1
92–4102	Secondary Piston Assembly	9	4	1
92–4103	Pin – Stop	9	3	1
92–4104	Adaptor – Pipe Fitting	9	1	2
92–4106	Rod – Push	9	8	1
92–4107	Dust Cover	9	7	1
92–4108	Washer – Retainer	9	10	1
92–4109	Circlip	9	9	1
92–4110	Clevis	9	5	1
92–4111	Petcock – Radiator	30	38	1
92–4112	Assembly – Cap	8	5	1
92–4113	Screw – Bleed	24	4	1
92–4114	Cap – Bleed Screw	24	5	1
92–4114	Cap – Bleed Screw	29	5	1
92–4117	Assy. – Wheel Cylinder LH	24	*	1
92–4118	Assy. – Wheel Cylinder RH	24	*	1
92–4119	Kit – Seal	24	*	1
92–4120	Shoe & Lining Set	24	13	1
92–4121	Assembly – Adjuster LH	24	*	1
92–4122	Assembly – Adjuster RH	24	*	1
92–4123	Assembly – Pawl LH	24	19	1
92–4123	Assembly – Pawl LH	29	19	1
92–4124	Assembly – Pawl RH	24	*	1
92–4124	Assembly – Pawl RH	29	*	1
92–4125	Plug	24	3	1
92–4126	Spring – Shoe, Upper LH	24	14	1
92–4127	Spring – Shoe, Upper RH	24	*	1
92–4128	Spring – Shoe, Lower	24	15	1
92–4129	Spring – Adjuster, LH	24	20	1
92–4130	Spring – Adjuster, RH	24	*	1
92–4131	Washer – Hold Down	24	22	2
92–4131	Washer – Hold Down	29	22	2
92–4132	Spring – Hold Down	24	23	2
92–4133	Pin – Hold Down	24	26	2
92–4133	Pin – Hold Down	29	26	2
92–4134	Plug – Inspection	24	25	1
92–4134	Plug – Inspection	29	25	1
92–4135	Set Bolt	24	1	2
92–4135	Set Bolt	29	1	2
92–4136	Backplate Assembly LH	24	2	1
92–4137	Screw – Bleed	29	4	1
92–4138	Backplate Assembly LH	29	2	1
92–4139	Backplate Assembly RH	29	*	1
92–4140	Assy. – Wheel Cylinder LH	29	*	
92–4141	Assy. – Wheel Cylinder RH	29	*	1
92–4142	Seal Kit	29	*	1
92–4143	Shoe & Lining Set	29	13	1
92–4144	Assembly – Adjuster LH	29	*	1
92–4145	Assembly – Adjuster RH	29	*	1
92–4146	Plug	29	3	1
92–4147	Spring – Shoe, Upper LH	29	14	1
92–4148	Spring – Shoe, Upper RH	29	*	1
92–4149	Spring – Shoe, Lower	29	15	1
92–4150	Spring – Adjuster, LH	29	20	1
92–4151	Spring – Adjuster, RH	29	*	1
92–4152	Spring – Hold Down	29	23	2
92–4153	Assembly –Steering Column	5	11	1
92–4154	Universal Joint Assembly	5	31	1
92–4155	Slip Joint Assembly – Upper	5	28	1
92–4158	Valve Assy. – Hyd. Gear	7	*	1
92–4159	Nut – Adjuster Plug Lock	6	25	1
92–4160	Bearing Service Kit – Upper	7	*	1
92–4161	Assembly – Cover Service	6	*	1
92–4162	Pitman Shaft – Gear Service	7	*	1
92–4163	Assy. – Steering Housing	7	*	1
92–4164	Plug Assy. – Service Adjust.	7	*	1
92–4165	Plug – Housing End	6	2	1
92–4166	Rack/Piston/Nut Assembly	7	*	1
92–4167	Assembly – Plug Service	7	*	1
92–4168	Return – Guide Ball	6	7	2
92–4169	Bearing – Needle	6	21	1
92–4170	Bearing – Pitman Shaft	6	47	1
92–4177	Yoke – Double Clamp	27	34	2
92–4179	Yoke, Shaft & Seal Tube	27	33	2
92–4180	Seal	27	32	2
92–4182	Yoke & Hub	27	31	2
92–4187	Cross & Bearing Kit	27	30	4
92–4188	Ring – Snap	27	28	12
92–4189	Strap & Bolt Kit	27	36	4
92–4190	Yoke – End	27	29	2
92–4193	Yoke – Flange	21	1	1
92–4194	Yoke – Tube	21	3	1
92–4195	Slip Yoke Assembly	21	4	1
92–4196	Seal	21	6	1
92–4198	Fan Shroud Assembly	30	17	1
92–4199	Skirt Assembly	13	2	1
92–5180	Plate – Center	37	21	1
92–5183	Shaft – Front Drive	39	34	1
92–5184	Gear – 41T	39	35	1
92–5185	Bearing – Ball	39	36	1
92–5186	Gear – 43T	38	2	1
92–5951	Angle – Hitch	27	41	1
92–5972	Grommet	14	5	4
93–3102	Cap – Fuel	44	1	1
93–3618	Pinnion & Ring Gear Assy.	20	8	1
93–6668	Decal – Charging (CE)	42	24	1
93–6681	Decal – Warning (CE)	30	47	1
93–6687	Decal – No Step (CE)	42	*	1
93–7051	Radiator Assembly	30	39	1
93–7052	Joint – Lower Ball	19	8	2
93–7053	Warning Light Assembly	2	9	1
93–7054	Front Differential Assembly	19	20	1
93–7055	Turnbuckle	23	24	1
93–7056	Rod – Tie RH	23	22	1
93–7057	Rod – Tie LH	23	*	1

*Not Illustrated

TORO PART NUMBER INDEX (Cont.)

Part No.	Description	Pg. No.	Ref. No.	Qty.
93–7058	Bracket – Brake Hose LH	23	*	1
93–7059	Hose – Brake Front	10	9	2
93–7059	Hose – Brake Front	23	13	2
93–7059	Hose – Brake Front	19	14	2
93–7070	Bracket – Brake Hose	19	11	2
93–7071	Bracket – Brake Hose RH	23	12	1
93–7074	Mount – Differential Rear	19	21	1
93–7078	Constant Velocity Joint Assy.	23	15	2
93–7079	Tube – Brake LH	23	*	1
93–7080	Tube – Brake RH	23	8	1
93–7081	Tube – Brake Front RH	10	10	1
93–7082	Tube – Brake Front LH	10	16	1
93–7083	Tube – Brake Front	10	1	1
93–7084	Tube – Brake Rear	10	5	1
93–7085	Tube – Brake Front	10	19	1
93–7086	Tube – Brake Rear	10	7	1
93–7087	Tube – Brake Rear	10	12	1
93–7088	Support – Fan	30	20	1
93–7090	Stub – Axle	27	14	2
93–7091	Clutch Cable Assembly	12	1	1
93–7092	Hydraulic Tube Assembly	46	16	1
93–7093	Hydraulic Tube Assembly	46	20	1
93–7094	Cover – Wire Harness	2	49	1
93–7097	Cable – Accelerator	34	6	1
93–7097	Cable – Accelerator	8	40	1
93–7099	Frame – Engine	33	1	1
93–7100	Mount – Engine	33	5	1
93–7100	Mount – Engine	34	40	1
93–7102	Muffler	34	31	1
93–7103	Screen – Radiator	30	8	1
93–7105	Cable Assembly	15	15	2
93–7106	Hi–Lo Cable Assembly	15	6	1
93–7107	Cable – Parking Brake	16	24	2
93–7114	Operators Platform Assy.	1	17	1
93–7115	Bidirectional Clutch Assembly	22	*	1
93–7116	Differential Driveshaft Assy.	19	24	1
93–7116	Driveshaft Assembly	21	*	1
93–7117	Plate – Adaptor	22	14	1
93–7118	Bracket – Differential Front	19	27	1
93–7120	Housing – Bell	12	10	1
93–7124	Driveshaft Assembly	28	*	2
93–7128	Drum – Brake	23	32	2
93–7130	Harness – Wire	34	15	1
93–7130	Harness – Wire	43	33	1
93–7130	Harness – Wire Rear	2	34	1
93–7133	Arm – Control Upper LH	19	*	1
93–7135	Arm – Control Upper RH	19	3	1
93–7137	Pulley	30	26	1
93–7140	Belt – V	32	14	1
93–7141	Decal – Load Rating (US)	1	16	1
93–7145	Screw – Cap Hex. Hd.	5	19	3
93–7275	Decal – Starting Fluid (CE)	30	*	1
93–7276	Decal – Danger (CE)	42	25	1
93–7814	Decal – Caution (CE)	32	*	1
93–8071	Decal – Caution (CE)	26	*	2
93–8900	Carrier Assembly	20	15	1
93–8901	Differential Case Assembly	20	*	1
93–8902	Spacer – Bearing	20	24	1
93–8903	Flange	20	19	1
93–8904	Shim – .003	20	21	A/R
93–8905	Shim – .005	20	*	A/R
93–8906	Shim – .010	20	*	A/R
93–8907	Shim – .030	20	*	A/R
93–8908	Housing – Front	20	2	1
93–8909	Screw – Cap Hex. Hd.	20	16	8
93–8910	Vent	20	1	1
93–8911	Gear – Bevel Side	20	5	2
93–8916	Plug Assembly	20	12	2
93–8917	Bearing – Needle	20	34	2

Part No.	Description	Pg. No.	Ref. No.	Qty.
93–8918	Seal – Oil	20	33	2
93–8919	Bearing – Thrust	22	10	1
93–8920	Housing & Race	22	5	1
93–8921	Cage	22	12	1
93–8922	Spring – Garter	22	6	1
93–8923	Spring	22	11	1
93–8924	Cam	22	8	1
93–8925	Roller	22	7	6
93–8929	Washer – Thrust	22	9	1
93–8938	Bracket – Cover Mount LH	30	44	1
93–8939	Bracket – Cover Mount RH	30	46	1
93–8940	Cover – Radiator	30	45	1
93–8941	Bracket – Front LH	50	15	1
93–8942	Bracket – Front RH	50	*	1
93–8943	Plate – Tail Light LH	50	12	1
93–8944	Plate – Tail Light RH	50	*	1
93–8970	Cylinder Head Assembly	54	28	1
93–8972	Shaft – Idler	57	34	1
93–8973	Piston & Pin Set STD	52	10	3
93–8974	Thermostat	34	42	1
93–8975	Piston & Pin Set 0.25 OS	52	*	3
93–8976	Piston & Pin Set 0.50 OS	52	*	3
93–8981	Joint & Shaft – Outboard	25	5	1
93–8982	Boot Kit – Outboard	25	1	1
93–8983	Boot Kit – Inboard	25	2	1
93–8984	Joint Assembly – Inboard	25	4	1
93–8985	Clip – Circular	25	3	1
93–8987	Slip Joint Assembly – Lower	5	29	1
93–8988	Boot – Steering Shaft	5	24	1
93–9430	Decal – Differential (CE)	13	*	1
93–9442	Decal – ATF (CE)	27	*	1
93–9443	Decal – Parking Brake (CE)	13	*	1
93–9444	Decal – Dump Hyd. (CE)	13	*	1
93–9447	Decal – Caution (CE)	30	*	1
93–9448	Decal – Caution (CE)	13	*	1
93–9449	Decal – Grease (CE)	27	*	2
93–9850	Decal – Rollover (CE)	17	*	1
93–9851	Decal – Fuse Block (CE)	3	*	1
93–9852	Decal – Danger (CE)	14	*	1
93–9852	Decal – Warning (CE)	47	*	2
93–9852	Decal – Warning (CE)	48	*	1
93–9856	Decal – Supervisor (CE)	3	*	1
93–9857	Decal – Axle Range (CE)	13	*	1
93–9859	Decal – ROPS (CE)	17	*	2
93–9860	Decal – Danger (CE)	13	*	1
93–9861	Decal – PTO (CE)	13	*	1
93–9862	Decal – PTO (CE)	27	*	1
93–9866	Decal – Remote Hyd. (CE)	13	*	1
93–9879	Decal – Warning (CE)	18	*	2
94–1200	Decal – Quick Ref. (DN)	13	*	1
94–1201	Decal – Quick Ref. (DU)	13	*	1
94–1202	Decal – Quick Ref. (FN)	13	*	1
94–1203	Decal – Quick Ref. (FR)	13	*	1
94–1204	Decal – Quick Ref. (GR)	13	*	1
94–1205	Decal – Quick Ref. (IT)	13	*	1
94–1207	Decal – Quick Ref. (NO)	13	*	1
94–1208	Decal – Quick Ref. (PO)	13	*	1
94–1209	Decal – Quick Ref. (SP)	13	*	1
94–1210	Decal – Quick Ref. (SW)	13	*	1
94–1225	Decal – Load Rating (CE)	1	*	1
94–1257	Block Sub–Assembly	51	1	1
94–1258	Gasket – Cylinder Head	54	25	1
94–1259	Case Sub–Assembly	55	1	1
218–446	Nut – Hex.	2	11	1
218–447	Washer – Lock	2	12	1
218–473	Boot – Switch	3	63	1
218–574	Fuse – 7.5 Amp	2	46	2
218–578	Fuse – 10 Amp	3	61	1
218–600	Bulb	2	13	2

*Not Illustrated

TORO PART NUMBER INDEX (Cont.)

Part No.	Description	Pg. No.	Ref. No.	Qty.
219–17	Bulb – Warning Light	3	59	4
232–27	Valve – Stem	27	17	2
233–37	Knob	15	1	1
233–39	Knob	46	1	1
233–39	Knob	5	1	1
233–48	Knob	16	4	1
237–21	Seal – O–Ring	47	2	6
237–22	Seal – O–Ring	47	5	3
237–22	Seal – O–Ring	46	9	4
237–30	Seal – O–Ring	35	34	2
237–42	O–Ring	49	2	2
237–42	Seal – O–Ring	47	7	2
237–42	Seal – O–Ring	46	11	2
237–42	Seal – O–Ring	35	47	1
237–78	Seal – O–Ring	47	15	4
237–79	Seal – O–Ring	20	13	2
237–79	Seal – O–Ring	47	25	1
237–79	Seal – O–Ring	35	39	2
237–80	Seal – O–Ring	47	24	1
237–81	Seal – O–Ring	35	28	1
237–123	Seal – O–Ring	35	25	1
240–5	Grommet	12	31	1
240–6	Grommet	8	22	1
2410–35	Plug – Hole	2	6	1
2410–42	Cap – Front Bumper	1	12	2
2410–64	Plug – Hole	3	64	1
2411–33	Joint – Ball	12	3	1
2412–10	Clamp – R	19	13	2
2412–34	Clamp	47	22	1
2412–34	Clamp	34	36	2
2412–34	Clamp – Hose	30	6	2
2412–34	Clamp – Hose	33	7	1
2412–34	Clamp – Hose	36	53	1
2412–36	Clamp	44	8	1
2412–36	Clamp – Hose	35	3	3
2412–89	Clamp – R	42	20	1
2412–89	Clamp – R	12	29	1
2412–89	Clamp – R	2	32	1
2412–92	Clamp – Hose	34	10	1
2412–92	Clamp – Hose	44	20	2
2412–93	Clamp – R	50	2	1
2412–106	Clamp – R	33	11	1
2412–107	Clamp – R	34	47	1
2412–108	Clamp – Hose	44	10	1
2412–108	Clamp – Hose	34	12	2
2412–108	Clamp – Hose	43	13	3
2412–130	Clamp – Hose	45	10	1
2412–133	Clamp – R	14	3	2
2412–143	Clamp – Hose	8	15	2
2412–144	Clamp – Hose	8	34	2
2412–149	Clamp – R	34	37	1
2412–149	Clamp – Tube	26	24	5
2412–149	R–Clamp	10	14	2
251–8	Bearing – Ball	39	1	2
251–8	Bearing – Ball	22	4	2
251–82	Bearing – Ball	32	11	2
251–346	Bearing – Ball	39	8	2
253–987	Fitting – Hydraulic 90°	35	29	1
254–65	Cone – Bearing	20	29	2
254–66	Cup – Bearing	20	30	2
254–90	Cup – Bearing	20	23	1
256–257	Bushing – Flange	8	1	2
256–257	Bushing – Flange	12	36	2
264–91	Cone – Bearing	20	22	1
283–2	Pin – Clevis	8	29	1
283–14	Pin – Clevis	16	23	1
283–30	Pin – Clevis	12	35	1
283–30	Pin – Clevis	8	42	1
283–62	Pin – Clevis	16	6	1
283–62	Pin – Clevis	15	8	3
283–62	Pin – Clevis	35	35	3
283–85	Pin – Clevis	8	39	1
302–5	Fitting – Grease	19	1	4
302–5	Fitting – Grease	23	26	3
302–5	Fitting – Grease	5	30	1
302–5	Fitting – Grease	27	35	4
302–11	Fitting – Grease	21	5	1
302–11	Fitting – Grease	18	8	1
302–58	Fitting – Grease	28	46	16
302–60	Fitting – Grease 90°	23	19	2
321–2	Screw – Cap Hex. Hd.	2	1	7
321–2	Screw – Cap Hex. Hd.	34	7	1
321–3	Screw – Cap Hex. Hd.	2	4	2
321–3	Screw – Cap Hex. Hd.	30	31	4
321–3	Screw – Cap Hex. Hd.	5	33	2
321–4	Screw – Cap Hex. Hd.	30	5	4
321–4	Screw – Cap Hex. Hd.	42	6	1
321–4	Screw – Cap Hex. Hd.	33	8	1
321–4	Screw – Cap Hex. Hd.	13	9	8
321–4	Screw – Cap Hex. Hd.	10	13	2
321–4	Screw – Cap Hex. Hd.	1	24	4
321–4	Screw – Cap Hex. Hd.	12	30	1
321–4	Screw – Cap Hex. Hd.	2	33	1
321–4	Screw – Hex. Flange Hd.	26	26	4
321–5	Screw – Cap Hex. Hd.	34	56	1
321–6	Screw – Cap Hex. Hd.	50	3	16
321–6	Screw – Cap Hex. Hd.	19	10	2
321–9	Screw – Cap Hex. Hd.	10	3	4
321–9	Screw – Cap Hex. Hd.	46	5	2
321–9	Screw – Cap Hex. Hd.	16	27	1
321–14	Screw – Cap Hex. Hd.	47	8	2
321–15	Screw – Cap Hex. Hd.	46	13	1
322–2	Screw – Cap Hex. Hd.	8	2	12
322–2	Screw – Cap Hex. Hd.	10	11	1
322–2	Screw – Cap Hex. Hd.	5	16	6
322–2	Screw – Cap Hex. Hd.	14	20	12
322–2	Screw – Cap Hex. Hd.	44	22	4
322–2	Screw – Cap Hex. Hd.	30	42	6
322–2	Screw – Cap Hex. Hd.	2	50	3
322–3	Screw – Cap Hex. Hd.	34	3	1
322–3	Screw – Cap Hex. Hd.	47	20	4
322–5	Screw – Cap Hex. Hd.	32	2	4
322–5	Screw – Cap Hex. Hd.	13	6	8
322–5	Screw – Cap Hex. Hd.	8	13	1
322–5	Screw – Cap Hex. Hd.	50	19	4
322–5	Screw – Cap Hex. Hd.	46	24	1
322–5	Screw – Cap Hex. Hd.	30	25	4
322–5	Screw – Cap Hex. Hd.	19	30	2
322–7	Screw – Cap Hex. Hd.	32	9	4
322–12	Screw – Cap Hex. Hd.	15	25	1
323–4	Screw – Cap Hex. Hd.	23	9	2
323–4	Screw – Cap Hex. Hd.	44	16	2
323–4	Screw – Cap Hex. Hd.	1	22	1
323–6	Screw – Cap Hex. Hd.	16	1	1
323–6	Screw – Cap Hex. Hd.	23	6	8
323–6	Screw – Cap Hex. Hd.	27	11	8
323–6	Screw – Cap Hex. Hd.	14	12	2
323–6	Screw – Cap Hex. Hd.	15	37	1
323–7	Screw – Cap Hex. Hd.	35	14	4
323–7	Screw – Cap Hex. Hd.	19	23	4
323–7	Screw – Cap Hex. Hd.	8	31	2
323–7	Screw – Cap Hex. Hd.	27	43	4
323–9	Screw – Cap Hex. Hd.	42	14	1
323–10	Screw – Cap Hex. Hd.	35	8	1
323–12	Screw – Cap Hex. Hd.	18	6	8
324–5	Screw – Cap Hex. Hd.	19	28	3
324–9	Screw – Cap Hex. Hd.	18	22	4
324–10	Screw – Cap Hex. Hd.	18	1	4

*Not Illustrated

TORO PART NUMBER INDEX (Cont.)

Part No.	Description	Pg. No.	Ref. No.	Qty.
324–11	Screw – Cap Hex. Hd.	19	33	2
324–12	Screw – Cap Hex. Hd.	33	3	2
324–12	Screw – Cap Hex. Hd.	19	19	4
324–13	Screw – Cap Hex. Hd.	18	10	2
325–4	Screw – Cap Hex. Hd.	14	15	2
325–13	Screw – Cap Hex. Hd.	19	15	2
325–13	Screw – Cap Hex. Hd.	18	27	4
325–19	Screw – Cap Hex. Hd.	27	27	1
325–20	Screw – Cap Hex. Hd.	27	24	5
3211–8	Screw – Cap Hex. Hd.	15	13	2
3215–1	Screw – Cap Hex. Hd.	35	16	1
3215–2	Screw – Cap Hex. Hd.	12	12	5
3217–25	Nut – Hex.	2	38	2
3217–26	Hut – Hex.	2	37	1
3217–29	Nut – Jam	3	58	3
3218–18	Nut – Jam	15	43	1
3218–20	Nut – Jam	12	16	2
3218–21	Nut – Jam	23	21	2
3219–14	Nut	15	5	1
3219–14	Nut – Hex.	35	32	1
3220–1	Nut – Jam	35	37	4
3220–1	Nut – Jam	15	41	4
3220–2	Nut – Jam	12	2	1
3220–3	Nut – Jam	15	12	2
3220–7	Nut – Jam	23	23	1
3220–11	Nut – Jam	23	25	2
3229–25	Nut – Lock	43	5	2
3229–25	Screw – Carriage	47	19	2
3230–18	Bolt – Carriage	14	2	8
3230–23	Bolt – Carriage	43	2	2
3230–23	Bolt – Carriage	42	5	4
3230–23	Bolt – Carriage	30	24	7
3231–3	Bolt – Carriage	18	21	4
3231–21	Bolt – Carriage	42	1	6
3231–21	Bolt – Carriage	46	21	1
3231–21	Bolt – Carriage	14	22	4
3231–21	Bolt – Carriage	15	32	4
3232–17	Bolt – Carriage	26	19	8
3234–1	Screw – Hex. Flange Hd.	1	13	6
3234–4	Screw – Hex. Flange Hd.	35	42	4
3234–11	Screw – Cap Hex. Hd.	33	18	6
3234–38	Screw – Cap Hex. Hd.	44	31	2
3234–38	Screw – Hex. Flange Hd.	26	17	22
3234–40	Screw – Hex. Flange Hd.	17	4	4
3250–13	Screw	2	51	2
3250–13	Screw – Hex. Hd.	13	15	20
3250–13	Screw – Pan Hd.	1	27	4
3250–20	Screw – Round Hd.	30	41	4
3253–3	Washer – Lock	30	30	4
3253–4	Washer – Lock	13	5	8
3253–4	Washer – Lock	5	14	4
3253–4	Washer – Lock	22	16	6
3253–4	Washer – Lock	34	22	6
3253–6	Washer – Lock	23	2	10
3253–6	Washer – Lock	19	29	3
3253–6	Washer – Lock	28	45	10
3253–15	Washer – Lock	44	5	5
3253–15	Washer – Lock	2	39	2
3253–19	Washer – Lock	3	57	3
3253–21	Washer – Lock	23	7	8
3253–21	Washer – Lock	27	10	8
3253–21	Washer – Lock	14	13	2
3253–21	Washer – Lock	19	22	4
3254–1	Washer – Lock	2	36	1
3254–2	Washer – Lock	34	32	2
3255–7	Washer – ETLW	43	3	1
3255–9	Washer – Lock ETLW	42	3	1
3256–3	Washer – Flat	32	8	4
3256–4	Washer – Flat	35	12	1

Part No.	Description	Pg. No.	Ref. No.	Qty.
3256–5	Washer – Flat	12	11	4
3256–6	Washer – Flat	26	9	4
3256–6	Washer – Flat	18	32	2
3256–14	Washer – Flat	46	30	1
3256–22	Washer – Flat	10	4	5
3256–22	Washer – Flat	2	5	2
3256–22	Washer – Flat	13	8	8
3256–22	Washer – Flat	50	11	19
3256–22	Washer – Flat	30	14	4
3256–22	Washer – Flat	46	18	3
3256–22	Washer – Flat	14	19	12
3256–22	Washer – Flat	43	30	1
3256–22	Washer – Flat	12	41	2
3256–23	Washer – Flat	13	4	4
3256–23	Washer – Flat	50	20	4
3256–23	Washer – Flat	16	21	1
3256–23	Washer – Flat	46	26	2
3256–23	Washer – Lock	12	38	4
3256–24	Washer – Flat	23	10	2
3256–24	Washer – Flat	42	15	2
3256–24	Washer – Flat	50	18	6
3256–25	Washer	34	30	6
3256–25	Washer – Flat	33	4	2
3256–27	Washer – Flat	26	6	4
3256–27	Washer – Flat	18	31	2
3256–28	Washer – Flat	32	15	1
3256–45	Washer – Flat	30	27	1
3256–61	Washer – Flat	13	25	14
3256–61	Washer – Flat	1	29	4
3256–67	Washer – Flat	43	29	3
3257–7	Key – Woodruff	32	17	1
3258–19	Screw – Round Head	45	2	2
3272–6	Pin – Cotter	15	3	3
3272–6	Pin – Cotter	35	30	3
3272–6	Pin – Cotter	8	37	1
3272–10	Pin – Cotter	16	8	1
3272–10	Pin – Cotter	12	33	1
3272–10	Pin – Cotter	19	34	2
3272–10	Pin – Cotter	8	43	1
3272–12	Pin – Cotter	23	16	4
3272–37	PIn – Cotter	47	18	2
3274–31	Screw – Button Hd.	2	7	4
3274–54	Screw – Hex. Socket Hd.	44	28	2
3274–94	Screw – Socket Button Hd.	50	16	6
3274–96	Screw	22	15	4
3274–97	Screw – Hex. Socket Hd.	22	17	6
3274–97	Screw – Socket Hex. Hd.	19	26	6
3277–1	Nut – Hex.	5	5	1
3290–221	Washer – Spring	15	34	1
3290–221	Washer – Spring	16	36	2
3290–271	Rivet – Pop	30	13	2
3290–321	Screw – Hex. Flange Hd.	8	10	2
3290–357	Nut – Flange	44	18	2
3290–357	Nut – Flange Lock	42	2	6
3290–357	Nut – Flange Lock	1	8	9
3290–357	Nut – Flange Lock	14	10	4
3290–357	Nut – Flange Lock	18	16	4
3290–357	Nut – Flange Lock	30	21	1
3290–357	Nut – Flange Lock	15	33	4
3290–357	Nut – Flange Lock	8	33	2
3290–378	Tie – Cable	33	2	1
3290–378	Tie – Cable (CE)	47	34	6
3290–379	Tie – Cable	34	38	1
3290–413	Washer – Belleville	33	16	12
3290–455	Washer	5	12	1
3290–456	Washer – Belleville	15	46	2
3290–477	Washer – Curved	16	28	1
3290–478	Washer – Belleville	16	17	1
3290–506	Palnut	50	4	2

*Not Illustrated

TORO PART NUMBER INDEX (Cont.)

Part No.	Description	Pg. No.	Ref. No.	Qty.
3290-507	Pin – Dowel	15	31	1
3296-2	Nut – Lock	8	8	2
3296-2	Nut – Lock	13	22	20
3296-2	Nut – Lock	1	30	4
3296-2	Nut – Lock	2	45	2
3296-3	Nut – Lock	34	9	1
3296-4	Nut – Lock	12	5	1
3296-5	Nut – Flange Lock	30	28	1
3296-15	Nut – Lock	32	16	1
3296-23	Nut – Hex.	19	16	8
3296-23	Nut – Lock	26	10	4
3296-23	Nut – Lock	18	14	4
3296-23	Nut – Lock	14	16	2
3296-27	Rivet – Plastic	42	11	4
3296-29	Nut – Flange Lock	30	23	8
3296-29	Nut – Lock	43	4	2
3296-29	Nut – Lock	32	6	6
3296-29	Nut – Lock	8	6	1
3296-29	Nut – Lock	12	19	1
3296-29	Nut – Lock	50	21	4
3296-29	Nut – Lock	46	27	1
3296-29	Nut – Lock	34	46	1
3296-39	Nut – Flange Lock	42	18	1
3296-39	Nut – Flange Lock	35	20	4
3296-39	Nut – Lock	50	1	6
3296-39	Nut – Lock	26	13	6
3296-39	Nut – Lock	33	15	6
3296-39	Nut – Lock	46	23	1
3296-39	Nut – Lock	18	28	8
3296-39	Nut – Lock	16	33	1
3296-39	Nut – Lock	27	42	4
3296-39	Nut – Lock	15	45	1
3296-42	Nut – Lock	16	12	1
3296-42	Nut – Lock	50	13	12
3296-42	Nut – Lock	30	15	4
3296-42	Nut – Lock	43	15	2
3296-42	Nut – Lock	46	19	2
3296-42	Nut – Lock	10	20	4
3296-42	Nut – Lock	44	26	2
3296-42	Nut – Lock	19	31	2
3296-42	Nut – Lock	5	32	2
3296-48	Nut – Lock	19	6	4
3296-48	Nut – Lock	18	11	10
3296-48	Nut – Lock	33	20	2
3296-56	Nut – Lock	34	50	3
3296-58	Nut – Lock	15	11	1
3296-59	Nut – Lock	5	13	1
3296-76	Nut – Lock	26	30	8
32104-82	Screw – Hex. Flange Hd.	26	25	2
32104-88	Screw	1	4	6
32107-11	Nut – Square	45	4	2
32120-47	Ring – E	12	32	2
32120-47	Ring – E	8	41	1
32120-47	Ring – Retaining	34	5	1
32120-47	Ring – Retaining	16	10	3
32121-7	Pin – Roll	12	22	1
32121-15	Pin – Roll	20	28	1
32121-24	Pin – Roll	12	24	2
32121-48	Pin – Roll	15	23	1
32122-24	Screw – Round Hd.	44	6	5
32128-20	Nut – Flange	10	17	1
32128-20	Nut – Flange	5	27	6
32128-20	Nut – Flange	2	48	3
32128-20	Nut – Flange Head	47	11	4
32128-20	Nut – Flange Lock	8	7	13
32128-20	Nut – Flange Lock	42	16	2
32128-20	Nut – Flange Lock	14	21	8
32128-20	Nut – Flange Lock	44	25	4
32128-20	Nut – Lock	19	12	2
32128-20	Nut – Lock	14	25	4
32128-20	Nut – Lock	30	40	6
32128-21	Nut – Lock	35	11	1
32128-23	Nut – Flange	44	17	2
32128-23	Nut – Flange Lock	17	5	4
32128-23	Nut – Flange Lock	26	21	22
32128-33	Nut – Flange	33	14	1
32128-33	Nut – Flange	2	44	11
32128-33	Nut – Flange Head	47	12	2
32128-33	Nut – Flange Head	10	15	2
32128-33	Nut – Flange Lock	35	1	1
32128-33	Nut – Flange Lock	42	4	1
32128-33	Nut – Flange Lock	46	6	1
32128-33	Nut – Flange Lock	26	27	4
32128-33	Nut – Flange Lock	12	28	1
32128-33	Nut – Lock	1	25	4
32128-36	Nut – Lock	27	38	4
32128-44	Nut – Flange Lock	14	9	2
32128-53	Nut – Flange Lock	27	26	2
32128-53	Nut – Flange Lock	23	36	2
32136-2	Nut – Hex. Slotted	19	5	2
32136-3	Nut – Hex. Slotted	23	17	4
32141-86	Screw – Leveler	30	18	1
32144-4	Screw – Hex. Washer Hd.	15	9	2
32144-18	Screw – Cap Hex. Hd.	2	22	2
32144-52	Screw – Hex. Hd.	13	12	6
32144-93	Screw – Self Tapping	50	6	2
32144-116	Screw – Pan Head	5	8	8
32148-6	Insert – Threaded	2	2	2
32148-7	Nut – Clinch	1	18	8
32148-7	Nut – Clinch	15	19	2
32148-10	Insert – Threaded	26	1	6
32148-15	Insert – Threaded	15	4	1
32148-15	Nut – Clinch	35	31	1
32151-41	Ring – Retaining	31	1	1
32151-56	Ring – Push-On	8	23	1
32151-104	Ring – Retaining	19	2	4
32152-10	Nut	48	12	1
340-2	Fitting – Straight	47	10	1
340-3	Fitting – Hydraulic Straight	47	26	1
340-77	Fitting – Hydraulic 90°	47	6	1
340-86	Fitting – Hydraulic Tee	46	15	1
340-92	Fitting – Hydraulic Straight	47	29	1
340-94	Fitting – Hydraulic Tee	46	10	1
340-132	Fitting – Hydraulic 90°	47	14	4
340-140	Fitting – Hydraulic Tee	47	28	1
340-151	Fitting – Hydraulic Tee	47	30	1
353-707	Fitting – 90° Barb	43	14	1
353-781	Fitting – Fuel 90°	44	14	1
353-783	Fitting – Straight	43	20	1
354-134	Fitting – Hydraulic 90°	35	40	2
354-135	Fitting – Hydraulic 90°	35	5	1
354-136	Fitting – Hydraulic Straight	47	23	1

*Not Illustrated

PRODUCT CHANGES

In an effort to make improvements available to TORO owners as quickly as possible, minor changes are incorporated into Toro's products from time to time that do not become immediately shown in the Parts Catalog. If such a change has been made in your unit, which is not reflected in your manual, see your TORO Distributor or his Authorized TORO Service Dealer for information and part numbers.

IDENTIFICATION AND ORDERING

MODEL AND SERIAL NUMBERS

The Workman 4300D has two identification numbers; a model number and a serial number. The two numbers are stamped on a plate which is located on the main frame. In any correspondence concerning the Workman 4300D, supply model and serial numbers to assure that correct information and replacement parts are obtained.

To order replacement parts from an Authorized TORO Service Dealer, supply the following information:
1. Model and serial number of the Workman 4300D.
2. Part number, description, and the quantity of part(s) desired.

NOTE: Do not order by reference number if a parts catalog is being used; use the PART NUMBER.

TABLE OF CONTENTS

Description	Page
Front Bumper & Hood Assembly	1
Control Panel Assembly	2–3
Electrical Schematic	4
Steering Linkage Assembly	5
Steering Gear Assembly No. 87–1500	6–7
Brake & Accelerator Pedal Assembly	8
Master Brake Cylinder No. 87–3030	9
Hydraulic Brake Line Routing Assembly	10
Hydraulic Schematic	11
Clutch Linkage Assembly	12
Seat Base Assembly	13
Seat Back Assembly	14
Hi–Lo Shift Levers Assemblies	15
Differential Lock & Parking Brake Assemblies	16
R.O.P.S. Assembly	17
Front Suspension Assembly	18
Front Suspension Control Arm Assembly	19
Front Differential Assembly No. 93–7054	20
Differential Driveshaft Assembly No. 93–7116	21
Bidirectional Clutch Assembly	22
Front Wheel Assembly	23
Front Brake Assembly	24
Constant Velocity (CV) Joint Assembly No. 93–7078	25
Rear Frame Assembly	26
Rear Axle Assembly	27–28
Rear Brake Assembly	29
Radiator & Hydraulic Pump Assembly	30
Hydraulic Pump Assembly No. 87–5700	31
Hydraulic Pump Drive Assembly	32

Description	Page
Engine Frame Assembly	33
Engine Installation Assembly	34
Transaxle Installation Assembly	35–36
Transaxle Case Assembly	37
Countershaft Assembly	38
Transaxle Gear Shafts Assembly	39
Shift Fork Assembly	40
Differential Gear Assembly	41
Battery Mount Assembly	42
Fuel Filter, Pump & Relay Mounting	43
Fuel Tank & Air Cleaner Assembly	44
Air Cleaner Assembly	45
Lift Valve Linkage Assembly	46
Lift Valve & Cylinder Assembly	47
Lift Cylinder No. 87–7990	48
Control Valve Assembly No. 43–1950	49
Rear Fender & Tail Light Assembly	50
Camshaft Assembly	51
Valves & Crankshaft Assembly	52–53
Cylinder Head Assembly	54
Crankcase Assembly	55
Water Pump Assembly	56
Fuel Supply & Engine Block Assembly	57
Fuel Injection Pump Assembly	58–59
Governor Assembly	60
Starter Assembly	61
Alternator Assembly	62
International Decal Cross Reference	63
TORO Part Number Index	64–75

Compliance with Radio Interference Regulations Certified.
Certifie Conforme au Reglement sur le Brouillage Radioelectrique.

Litho in U.S.A.
GG–95192