FORM NO. 3316–946

TORO®

MODEL NO. 20908BC–4900001 & UP

PARTS CATALOG

48cm REAR BAGGING MOWER

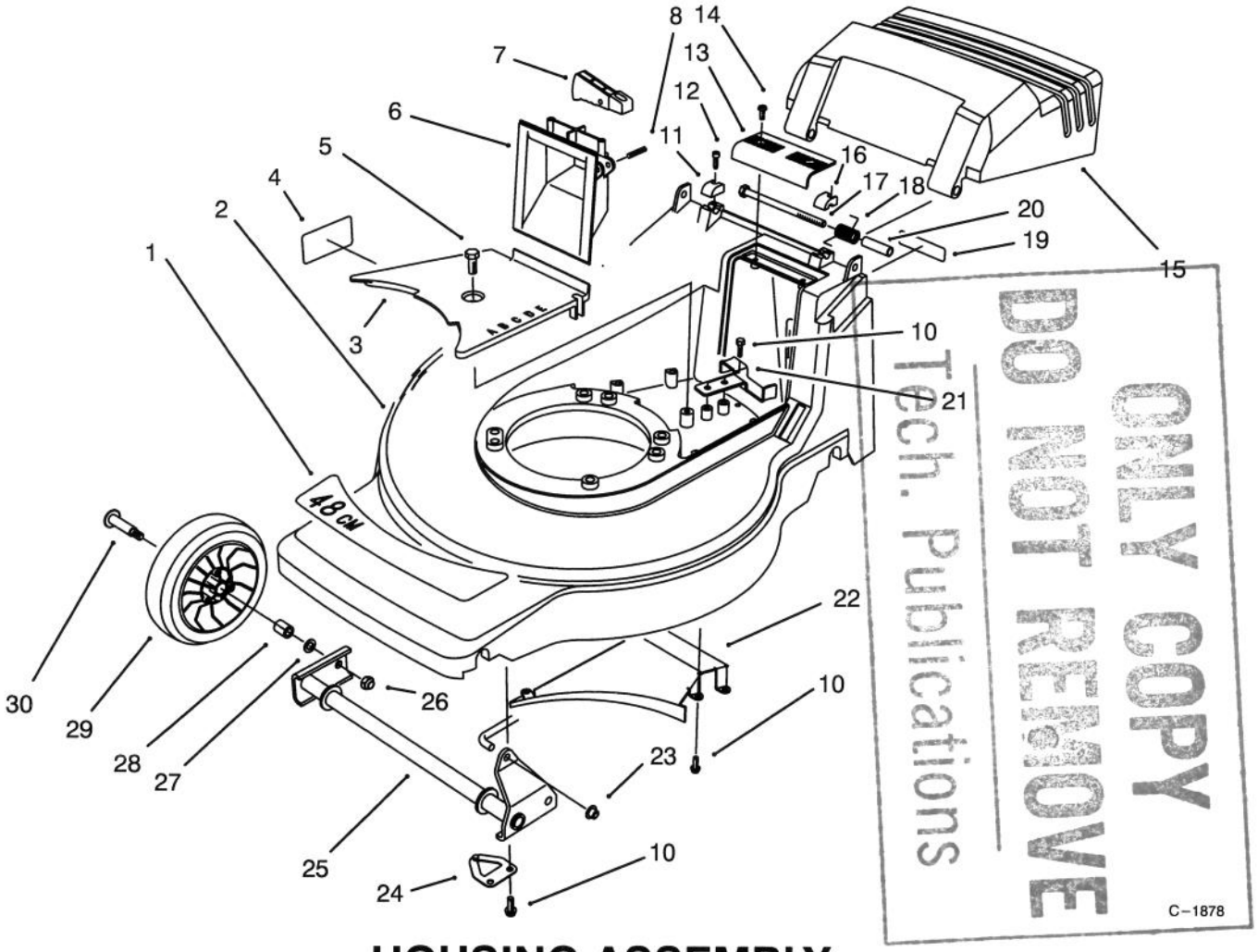

ONLY COPY
DO NOT REMOVE
Tech. Publications

HOUSING ASSEMBLY

Ref. No.	Part No.	Description	No. Used
1	71–9860	Decal – 48cm	1
2	16–5979	Housing – 48cm (Incl. Ref. #4)	1
3	71–7920	Cover – Belt	1
4	92–9077	Decal – DIN	1
5	32144–70	Screw – Hex. Flange Hd.	1
6	71–7870	Grip – Lower	1
7	71–7930	Trigger – H.O.C.	1
8	3284–5	Pin – Roll	1
10	32144–4	Screw – Thread Forming	10
11	71–7910	Cap – Hinge Bolt R.H.	1
12	65–5210	Screw – Thread Forming	2
13	71–7860	Grip – Upper	1
14	32144–97	Screw – Thread Forming	2
15	71–9800	Door – Discharge	1
16	71–7900	Cap – Hinge Bolt L.H.	1

Ref. No.	Part No.	Description	No. Used
17	322–29	Screw – Cap Hex. Hd.	2
18	71–9840	Spring – Door	2
19	66–0680	Decal – French Regulation	1
20	71–8580	Spacer – Door	2
21	71–7890	Guide – Belt Rear	1
22	71–7990	Ramp – Discharge	1
23	32112–11	Nut – Push	1
24	71–8830	Retainer – Shaft	2
25	71–7820	Pivot – Front	1
26	3296–5	Nut – Lock	2
27	40–1940	Washer – Wheel	2
28	27–6250	Bushing – Wheel	4
29	46–1113	Wheel & Tire Assembly (Incl. Ref. #28)	2
30	27–6230	Bolt – Wheel	2

© The TORO Company –1994
All Rights Reserved

TPS

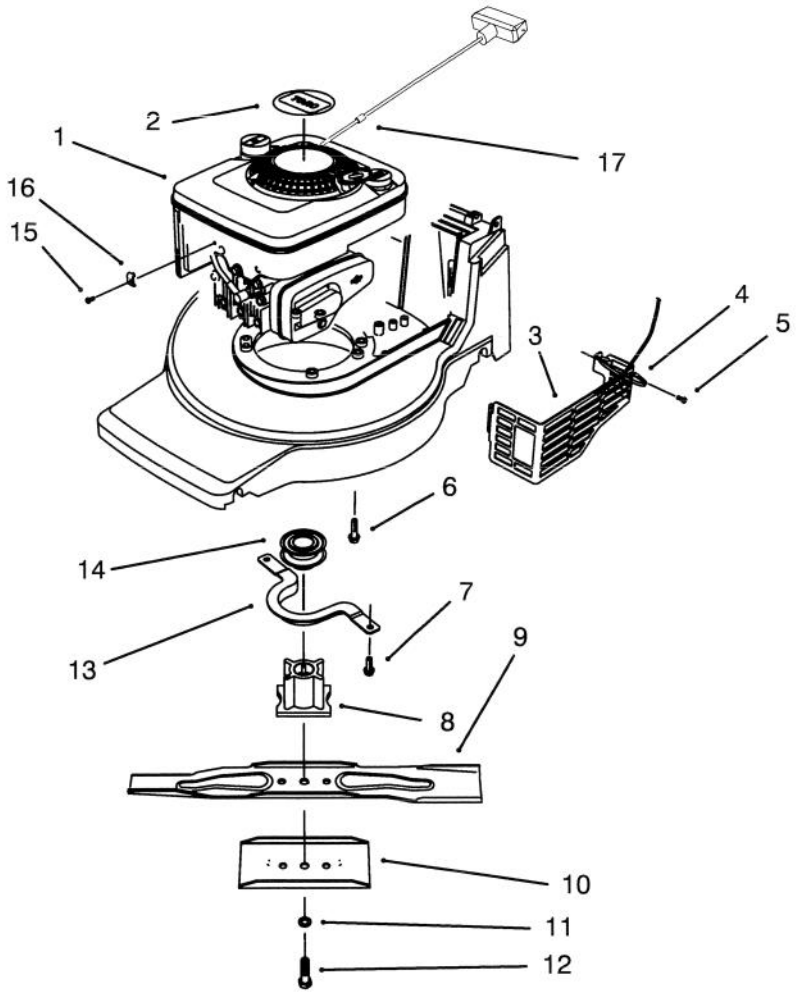

C–2091

ENGINE ASSEMBLY

Ref. No.	Part No.	Description	No. Used
1		Engine – B&S Quantum	1
2	92–8655	Decal – Engine	1
3	92–7852	Shield – Muffler	1
4	3290–378	Tie – Cable	1
5	32144–73	Screw – Muffler	3
6	32144–102	Screw – Engine Mount	3
7	32144–4	Screw – Thr'd Forming	2
8	71–7940	Retainer – Blade	1
9	92–9813	Blade – 48cm	1

Ref. No.	Part No.	Description	No. Used
10	92–9812	Stiffener – Blade	1
11	3253–22	Washer – Lock	1
12	26–0672	Bolt – Blade	1
13	71–7960	Guide – Engine Belt	1
14	62–7550	Pulley – Driver	1
15	86–7990	Screw – Clamp	1
16	2210–249	Clamp – Cable	1
17	2210–316	Stop – Rope	1

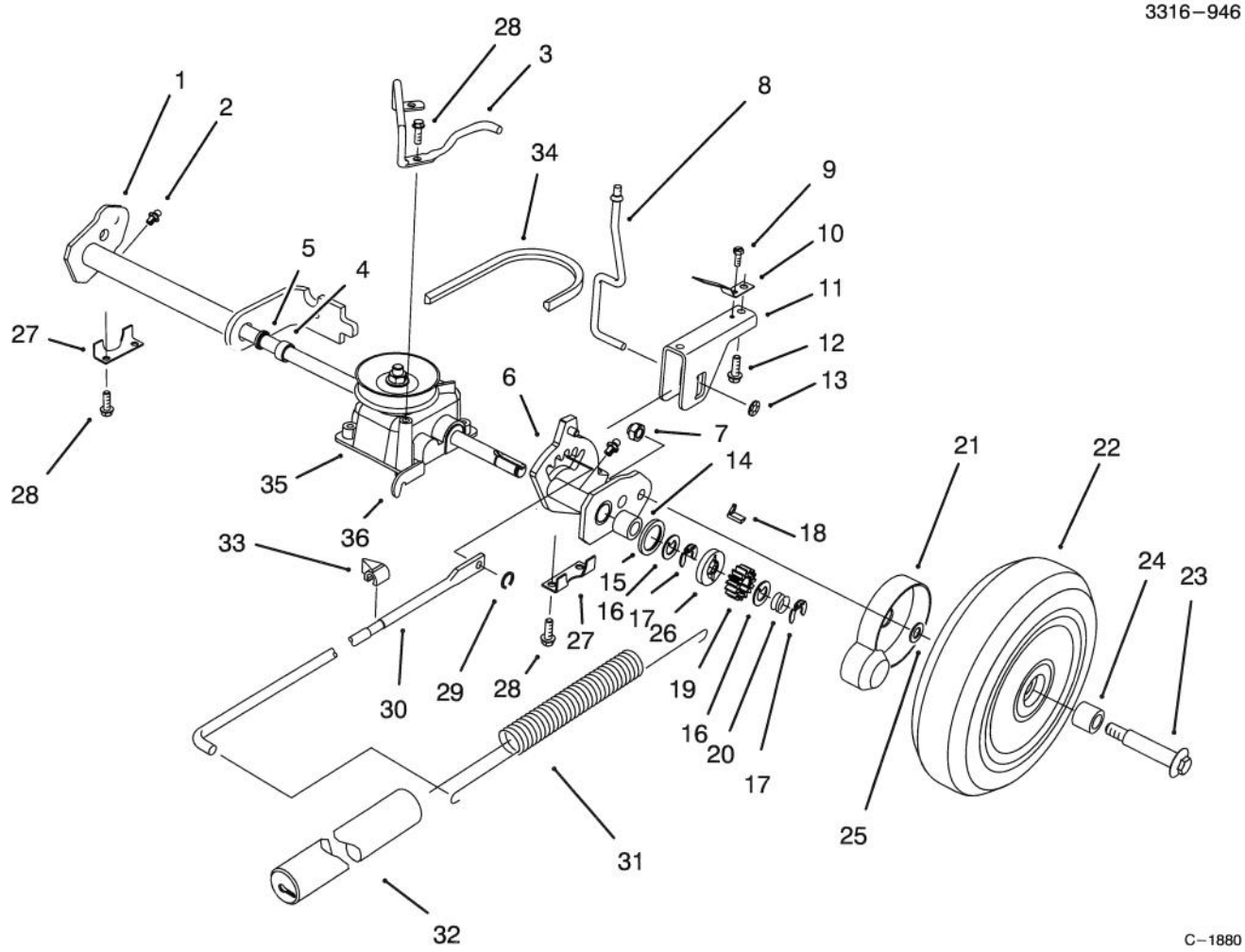

C–1880

S. P. REAR AXLE ASSEMBLY

Ref. No.	Part No.	Description	No. Used
1	92–9680	Rear Pivot Assembly R.H. (Incl. Ref. #2, 4, 5 & 14)	1
2	302–26	Fitting – Grease	2
3	71–9850	Retainer – Belt	1
4	47–2890	Bushing – Sleeve	2
5	47–6730	Seal – Grease	2
6	92–9677	Rear Pivot Assembly L.H. (Incl. Ref. #2, 4, 5 & 14)	1
7	3296–5	Nut – Lock	2
8	71–7840	Rod – Trigger	1
9	32144–31	Screw – Thread Forming	1
10	71–8060	Spring – Trigger Return	2
11	71–8080	Saddle – H.O.C.	1
12	63–8590	Screw – Thread Forming	2
13	32112–13	Nut – Push	1
14	48–2060	Bearing – Needle	2
15	65–4710	Washer – Friction	2
16	65–4740	Washer – Keyed Thrust	4
17	65–2720	Ring – Retaining	4
18	66–6050	Key – Rocking L.H.	1
*	66–6040	Key – Rocking R.H.	1

Ref. No.	Part No.	Description	No. Used
19	65–4750	Gear – Pinion	2
20	65–4720	Spring – Compression	2
21	74–1660	Cover – Wheel	2
22	14–9959	Wheel, Tire & Gear Assy. (Incl. Ref. #24)	2
23	27–6230	Bolt – Wheel	2
24	27–6250	Bushing – Wheel	4
25	74–1670	Spacer – Wheel	2
26	65–4760	Washer – Clutch	2
27	71–7770	Plate – Rear Securing	2
28	32144–4	Screw – Thread Forming	6
29	32151–93	Ring – Grip	1
30	71–7970	Rod – Link	1
31	71–7740	Spring – Counterbalance	1
32	71–8450	Cover – Spring	1
33	71–7980	Indicator – H.O.C.	1
34	71–9450	V–Belt	1
35	71–9600	Gearcase Assembly (Incl. Ref. #36)	1
36	71–9630	Bracket – Traction	1

*Not Illustrated

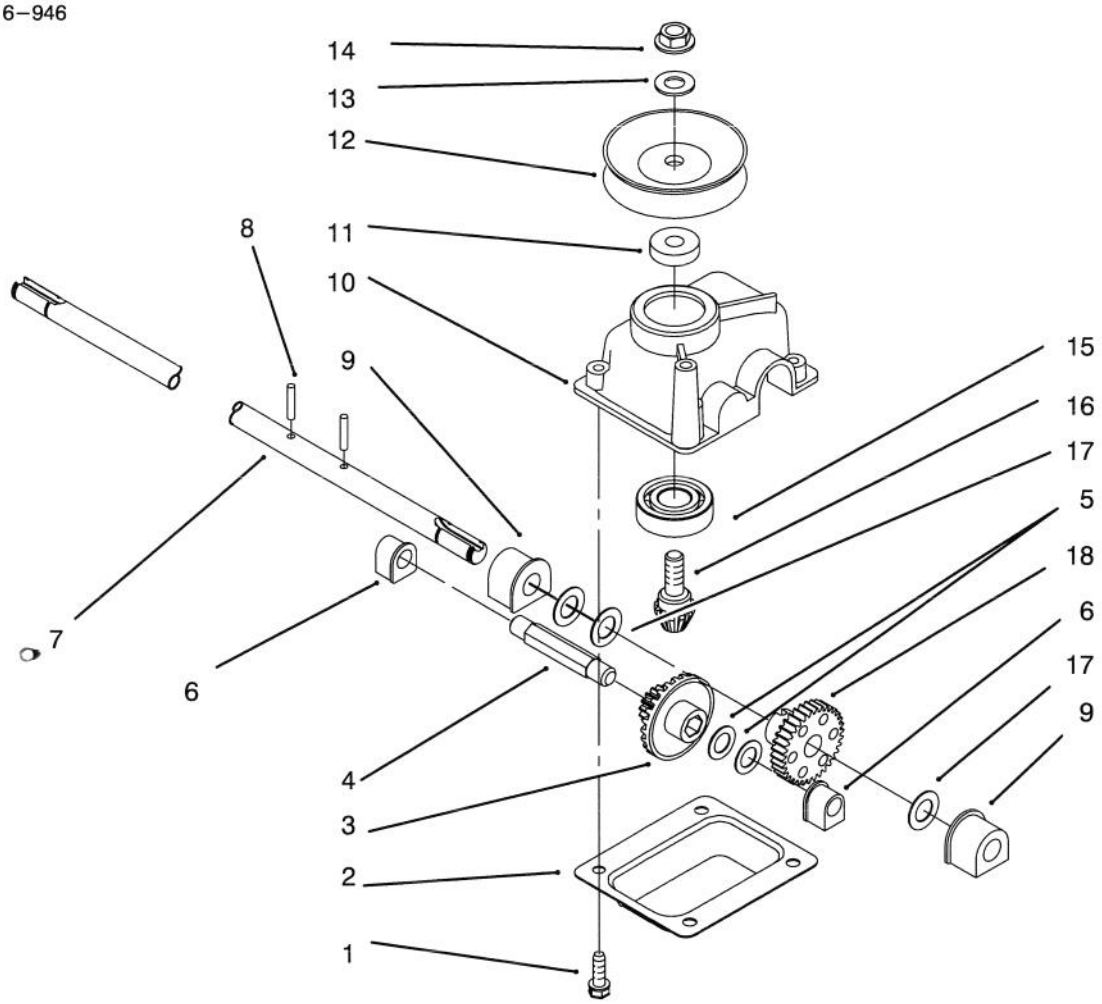

GEAR CASE ASSEMBLY

Ref. No.	Part No.	Description	No. Used
1	49–2040	Screw – Taptite	4
2	614668	Cover – Gear Case	1
3	55–3760	Pinion – 15 Tooth	1
4	614696	Shaft – Intermediate	1
5	36–4791	Washer	2
6	60–8750	Bushing	2
7	71–9620	Shaft – Output	1
8	32121–114	Pin – Spirol	2
9	60–8850	Bushing – Output	2
10	614578	Gearcase	1

Ref. No.	Part No.	Description	No. Used
11	62–6660	Spacer	1
12	71–9610	Pulley – Half	2
13	3256–24	Washer	1
14	3296–5	Nut	1
15	38–7820	Bearing – Ball	1
16	60–8890	Gear – Bevel Pinion	1
17	36–4780	Washer – Thrust	3
18	614596	Gear 34 Tooth	1
*	71–9600	Gear Case Ass'y Complete	1

*Not Illustrated

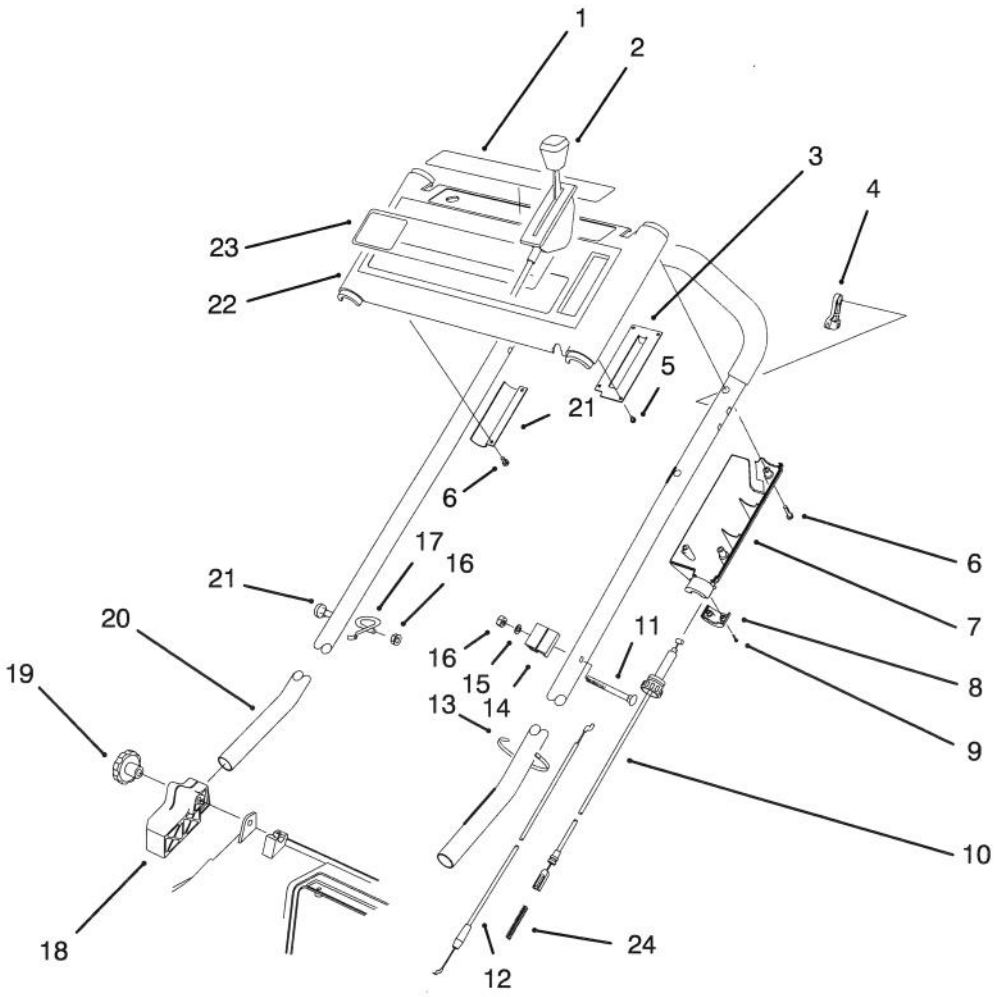

C–2092

HANDLE ASSEMBLY

Ref. No.	Part No.	Description	No. Used
1	93–1120	Decal – Instruction	1
2	93–1117	Control – Throttle	1
3	71–8040	Plate – Throttle	1
4	46–5520	Lever – Traction	1
5	32144–98	Screw – Phillips Pan Hd.	4
6	32144–97	Screw – Phillips Pan Hd.	5
7	93–0339	Cover – throttle Lower	1
8	71–7630	Cap – Throttle Lower	1
9	32144–99	Screw – Phillips Pan Hd.	2
10	93–1119	Cable – Traction	1
11	46–6432	Screw – Handle	1
12	93–1116	Cable – Brake	1
13	3290–378	Tie – Cable	1

Ref. No.	Part No.	Description	No. Used
14	46–6980	Support – Cable	1
15	3256–22	Washer – Flat	1
16	3296–42	Nut – Lock	2
17	46–8081	Guide – Rope	1
18	71–8100	Mount – Handle R.H.	1
*	71–8090	Mount – Handle L.H.	1
19	19–4050	Knob	2
20	71–9023	Handle Assembly	1
21	46–6435	Screw – Handle	1
22	16–8309	Panel – Control (Incl. Ref. #1 & 23)	1
23	71–9861	Decal – Panel	1
24	71–8310	Spring – Compression	1

*Not Illustrated

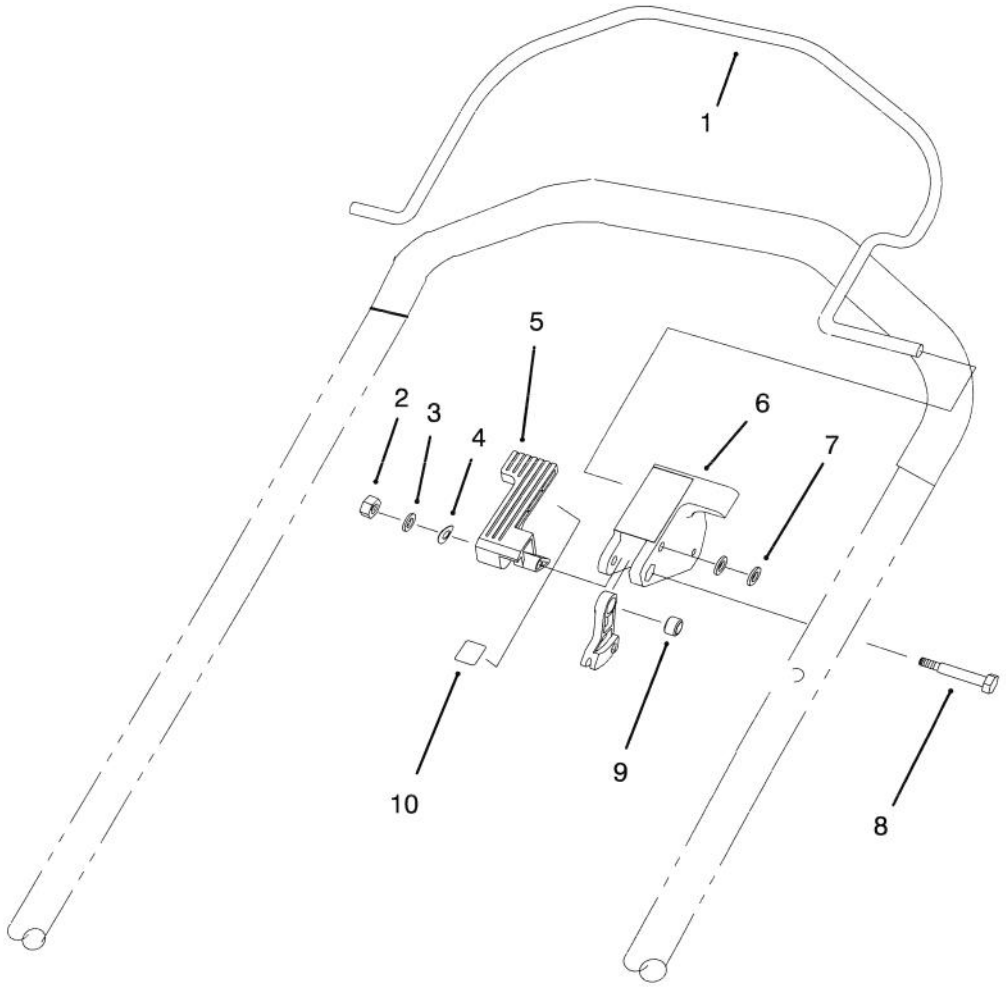

C–2082

CONTROL ASSEMBLY

Ref. No.	Part No.	Description	No. Used
1	93–0335	Bail – Control SP	1
2	3296–2	Nut – Lock	1
3	3256–49	Washer – Flat	1
4	92–2298	Washer – Spring	1
5	92–2299	Lever – Shift	1

Ref. No.	Part No.	Description	No. Used
6	93–0340	Stop – Pivot	1
7	3256–70	Washer – Flat	2
8	92–3132	Bolt – Shoulder	1
9	92–3133	Spacer – Traction Lever	1
10	93–3241	Decal – Traction	1

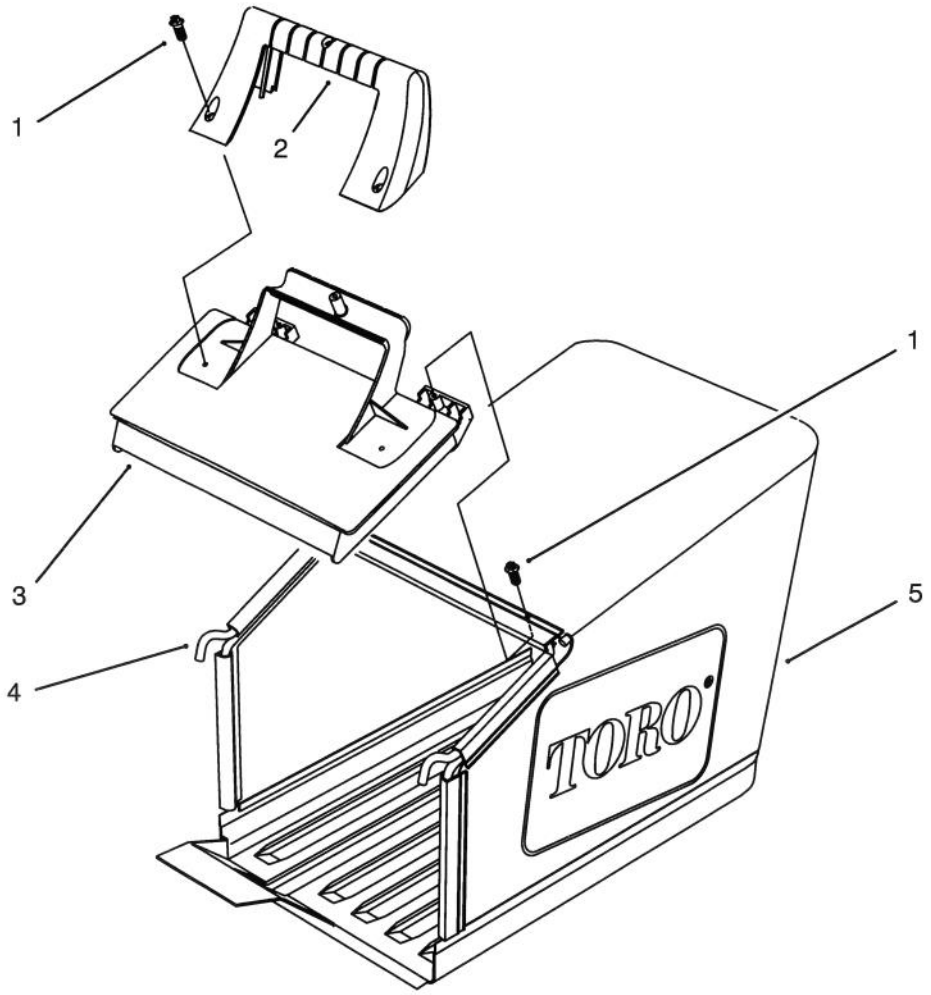

C–1509

GRASS BAG ASSEMBLY

Ref. No.	Part No.	Description	No. Used
1	32144–111	Screw – Thr'd Form	5
2	71–9480	Handle – Door	1
3	71–9470	Door – Bag	1

Ref. No.	Part No.	Description	No. Used
4	71–9900	Frame – Bag	1
5	71–9460	Bag – Grass	1

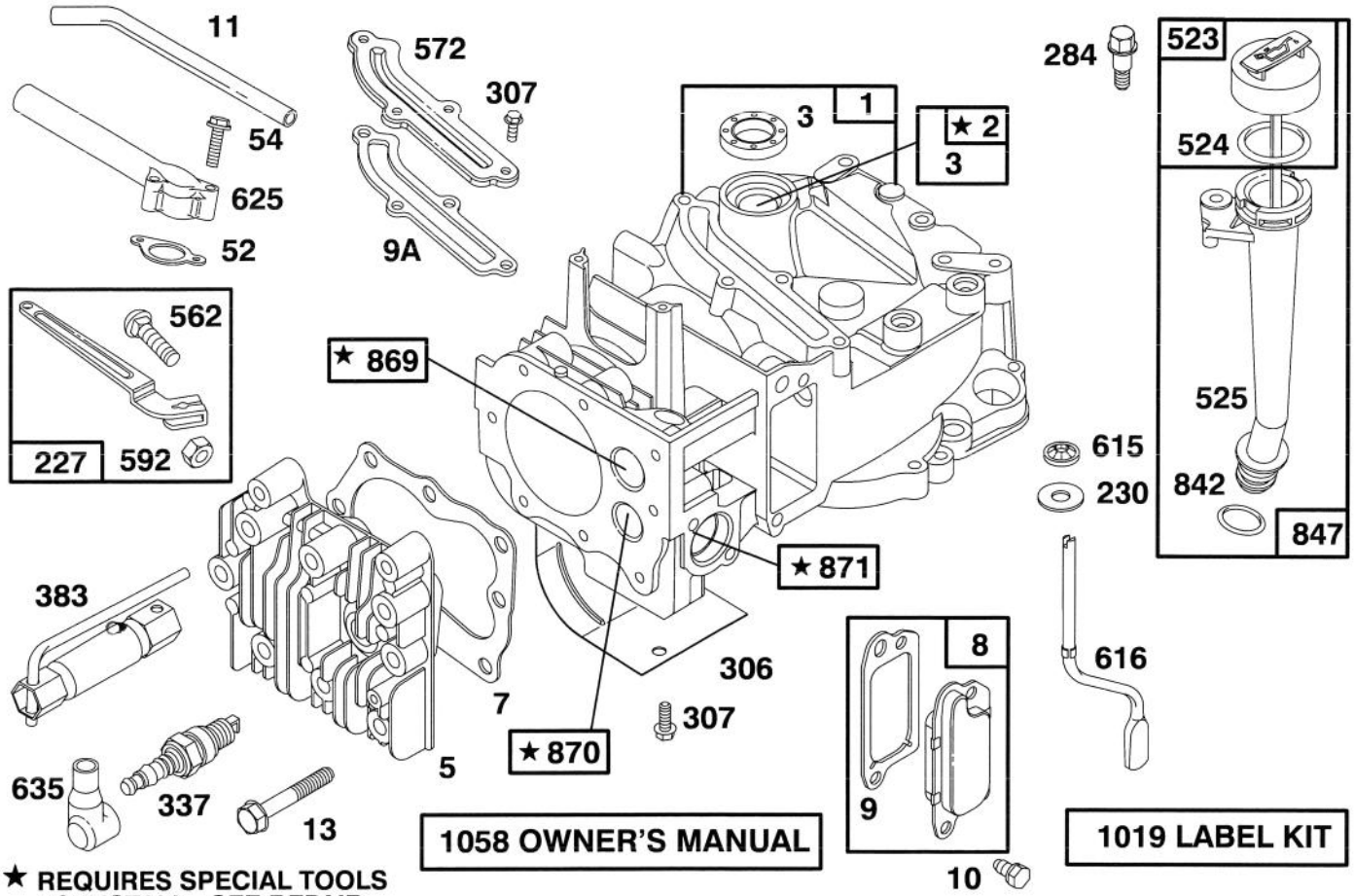

★ **REQUIRES SPECIAL TOOLS TO INSTALL. SEE REPAIR INSTRUCTION MANUAL.**

Assemblies include all parts shown in frames.

ENGINE BRIGGS & STRATTON MODEL 127702–0131–01

Ref. No.	Part No.	Description	No. Used
1	493260	Cylinder Assembly	1
2	293708	Bushing – Cylinder	1
★3	299819	Seal – Oil	1
5	213861	Head – Cylinder	1
★7	272200	Gasket – Cylinder Head	1
8	495786	Breather – Valve Chamber	1
★9	272481	Gasket – Valve Cover	1
★9A	272238	Gasket – Baffle Plate	1
10	94650	Screw – Breather Mtg.	1
11	231933	Tube – Breather	1
13	94547	Screw – Cylinder Head	1
★52	272199	Gasket – Intake Elbow	1
54	94526	Screw – Intake Elbow Mtg.	1
227	492349	Lever Assembly – Gov.	1
230	67072	Washer – Gov. Crank	1
284	94511	Screw – Hex. Head	1
306	224324	Shield – Cylinder	1
307	94515	Screw – Hex. Head	1
337	802592	Plug – Spark	1
383	89838	Wrench – Spark Plug	1

Ref. No.	Part No.	Description	No. Used
523	495264	Cap With Dipstick – Oil Filler	1
★524	280393	Seal – Filler Tube	1
525	495265	Tube – Oil Filler	1
562	92613	Bolt – Governor Lever	1
572	224328	Baffle – Cylinder	1
592	231082	Nut – Hex.	1
615	94474	Fastener	1
616	262578	Crank – Governor	1
625	281085	Tube – Fuel Intake	1
635	66538	Elbow – Spark Plug	1
★842	280966	Seal – O-Ring	1
847	495263	Oil Fill Tube and Dipstick Ass'y	1
869	213512	Seat – Intake Valve	1
870	213513	Seat – Exhaust Valve	1
871	262001	Guide – Exhaust Valve **Note:** 63709 Guide – Intake Valve	1
1019	494256	Label Kit	1
1058	272262	Owner's Manual	1

★ Included in Gasket Set–Part No. 496117.

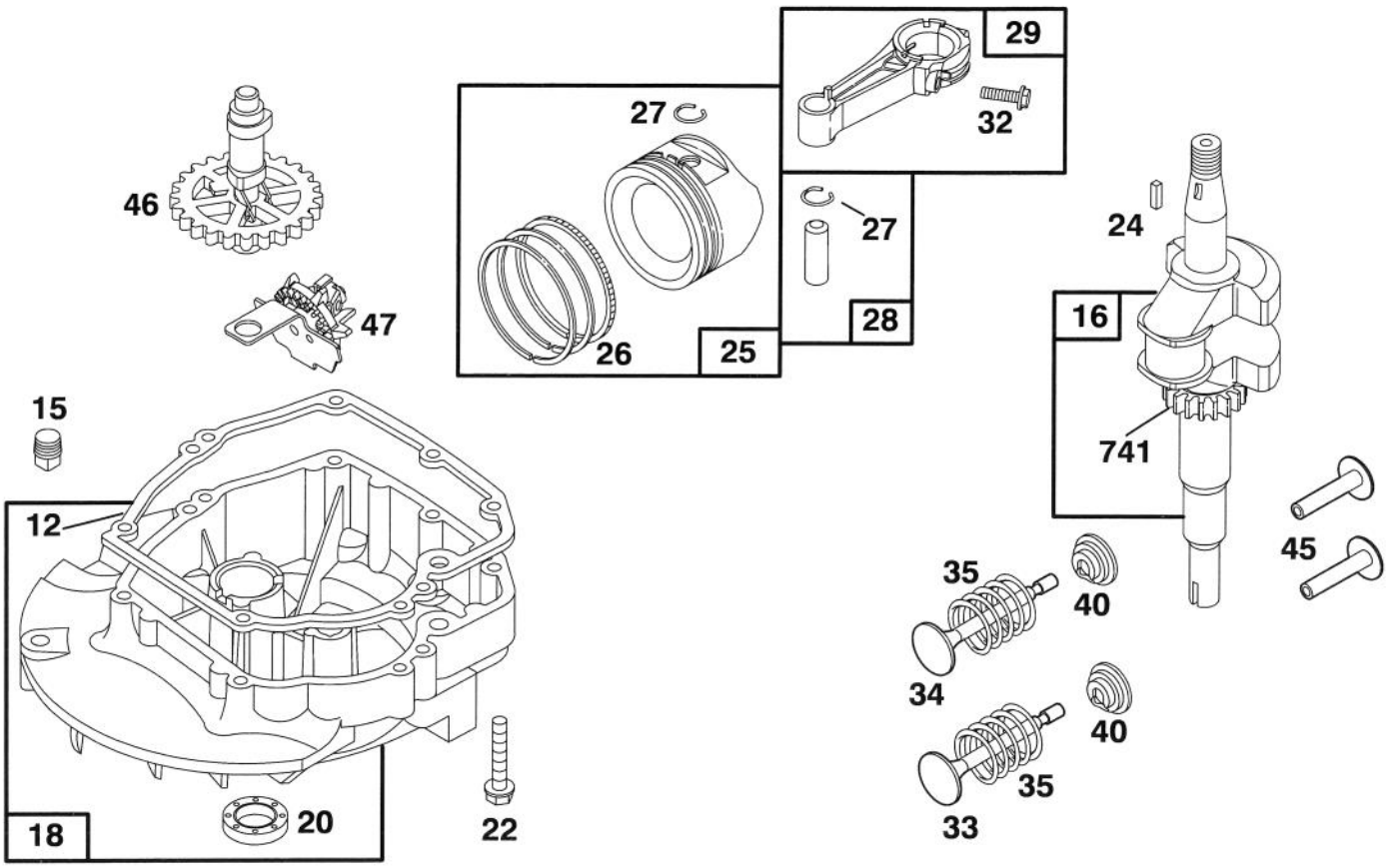

Assemblies include all parts shown in frames.

ENGINE BRIGGS & STRATTON MODEL 127702–0131–01

Ref. No.	Part No.	Description	No. Used
★12	272198	Gasket – Crankcase	1
15	94720	Plug – Oil Drain	1
16	494546	Crankshaft	
		Note: Order 94388 For Timing Gear Key	1
18	493279	Sump – Engine	1
★20	399781	Seal – Oil	1
22	94220	Screw – Sump Mounting Sem	1
		Note: 94612 Screw – Hex. Head (One (1) Used in Hole Nearest Breather)	1
24	222698	Key – Flywheel	1
25	493262	Piston Ass'y (Standard)	1
	493385	Piston Ass'y (.010" O.S.)	1
	493386	Piston Ass'y (.020" O.S.)	1
	493387	Piston Ass'y (.030" O.S.)	1
26	493261	Ring Set (Standard)	1
	493388	Ring Set (.010" O.S.)	1
	493389	Ring Set (.020" O.S.)	1
	493390	Ring Set (.030" O.S.)	1

Ref. No.	Part No.	Description	No. Used
27	26026	Lock – Piston Pin	1
28	298909	Pin – Piston (Standard)	1
	298908	Pin – Piston (.005" O.S.)	1
29	490566	Rod Assembly – Conn.	1
		Note: For Conn. Rod With .020" Undersize Crankpin Bearing – Order No. 490743	1
32	94699	Screw – Conn. Rod	1
33	262651	Valve – Exhaust	1
34	262652	Valve – Intake	1
35	262224	Spring – Valve	1
40	93312	Retainer – Valve Spring	1
45	262204	Tappet – Valve	1
46	492830	Gear – Cam	1
47	493737	Slinger – Oil	1
741	262598	Gear – Timing	1

★ Included in Gasket Set–Part No. 496117.

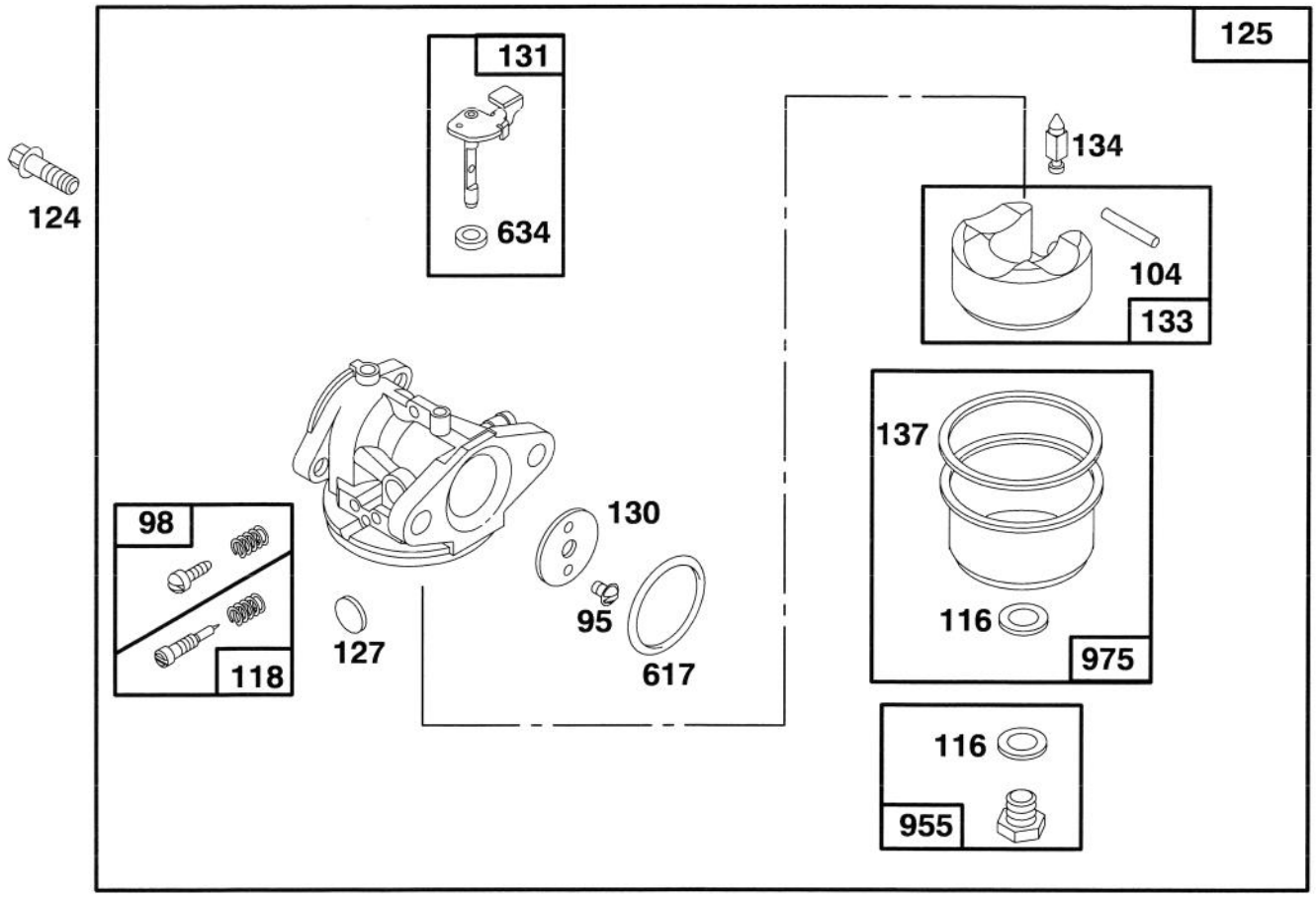

Assemblies include all parts shown in frames.

ENGINE BRIGGS & STRATTON MODEL 127702–0131–01

Ref. No.	Part No.	Description	No. Used
95	94098	Screw – Throttle Valve Mtg.	1
98	398185	Screw – Idle Adjustment	1
●104	231371	Pin – Float Hinge	1
●◆116		Gasket – Sealing (Sold in Kit Only)	1
●118	493765	Valve – Needle	1
124	94525	Screw – Carburetor Mtg.	1
125	496114	Carburetor	1
1●127		Plug – Welch (Sold in Kit Only)	1
130	223470	Valve – Throttle	1

Ref. No.	Part No.	Description	No. Used
131	493267	Shaft – Throttle	1
133	398187	Float Ass'y – Carburetor	1
●134	398188	Valve – Inlet (Includes Seat)	1
●◆137		Gasket – Bowl (Sold in Kit Only)	1
●◆617	270344	Seal – Fuel Intake Tube	
●◆634		Washer – Shaft (Sold in Kit Only)	1
955	493637	Screw – Bowl Mtg. (Std.) **Note:** 494870 Screw – Bowl Mtg. (High Altitude)	1
975	493640	Bowl Assy. – Carburetor	1

● Included in Carburetor Kit–Part No. 493762.
◆ Included in Carburetor Gasket Set–Part No. 490937.

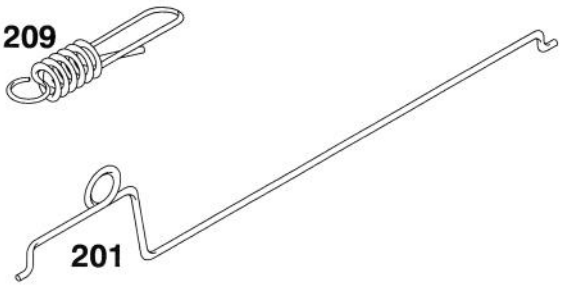

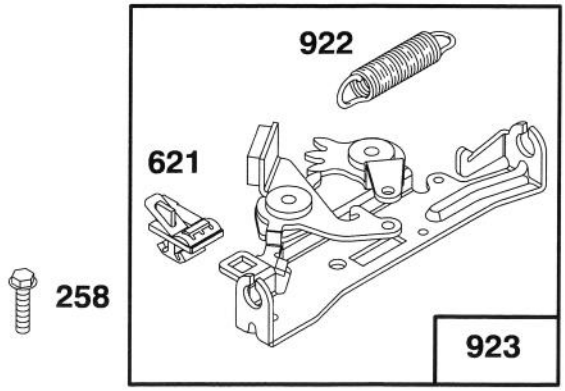

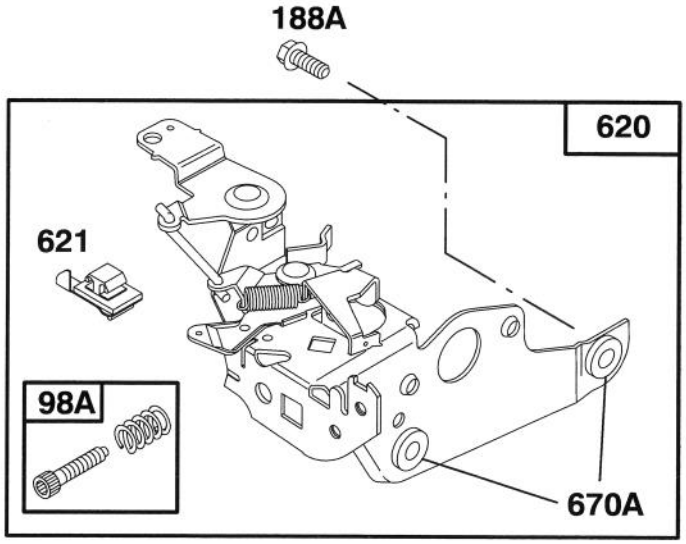

Assemblies include all parts shown in frames.

ENGINE BRIGGS & STRATTON MODEL 127702–0131–01

Ref. No.	Part No.	Description	No. Used
98A	493280	Screw – Speed Adjust.	1
188A	94644	Screw – Hex Head	1
201	262579	Link – Governor	1
209	262661	Spring – Governor	1
258	94512	Screw – Hex. Head	1

Ref. No.	Part No.	Description	No. Used
620	495975	Bracket – Carburetor	1
621	396847	Switch – Stop	1
670A	493823	Spacer – Bracket	1
922	262640	Spring – Brake	1
923	493442	Brake Ass'y	1

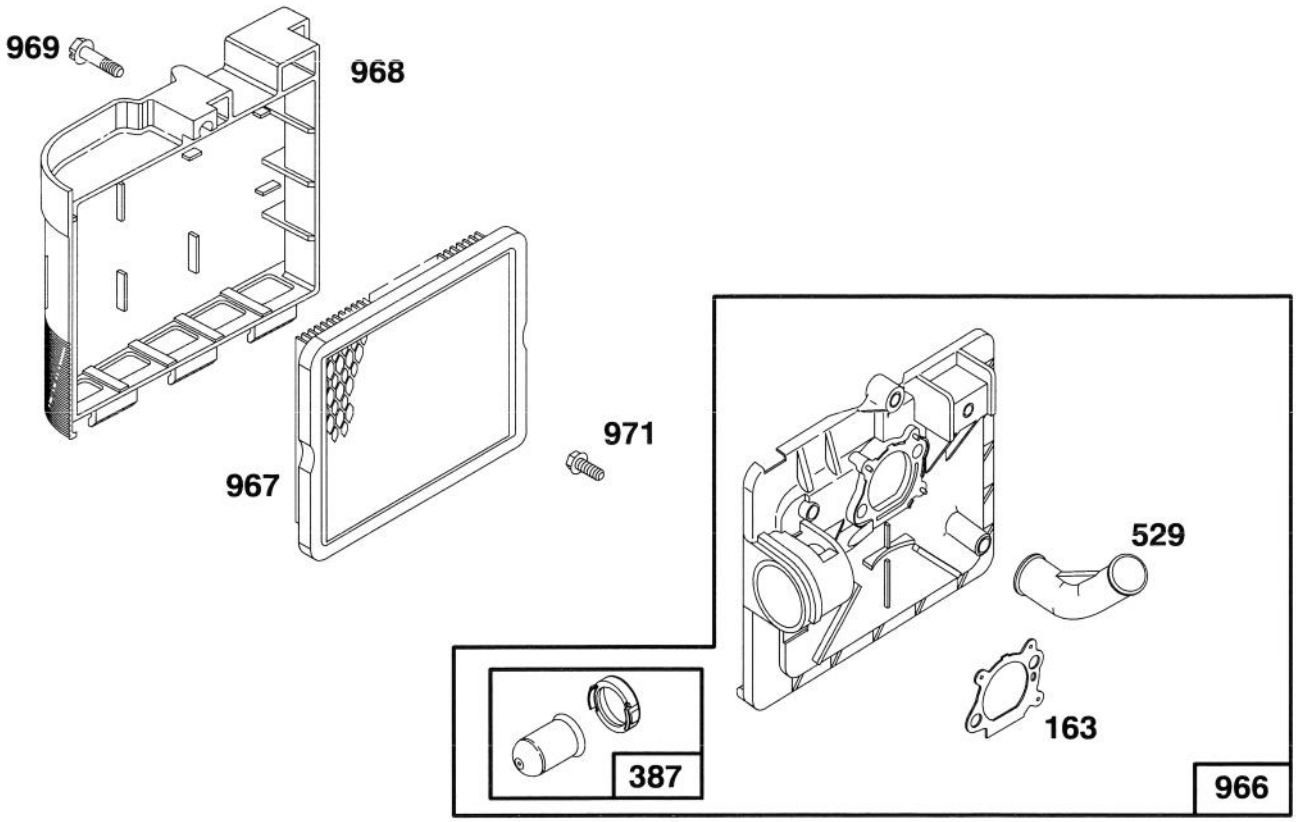

Assemblies include all parts shown in frames.

ENGINE BRIGGS & STRATTON MODEL 127702–0131–01

Ref. No.	Part No.	Description	No. Used
163	272653	Gasket – Air Cleaner	1
387	496115	Primer – Carburetor	1
529	281299	Grommet – Breather	1
966	496116	Base – Air Cleaner	1

Ref. No.	Part No.	Description	No. Used
967	491588	Filter – Air	1
968	281340	Cover – Air Cleaner	1
969	94120	Screw – Cover Mtg.	1
971	94121	Screw – Air Cleaner	1

★ Included in Gasket Set–Part No. 496117.

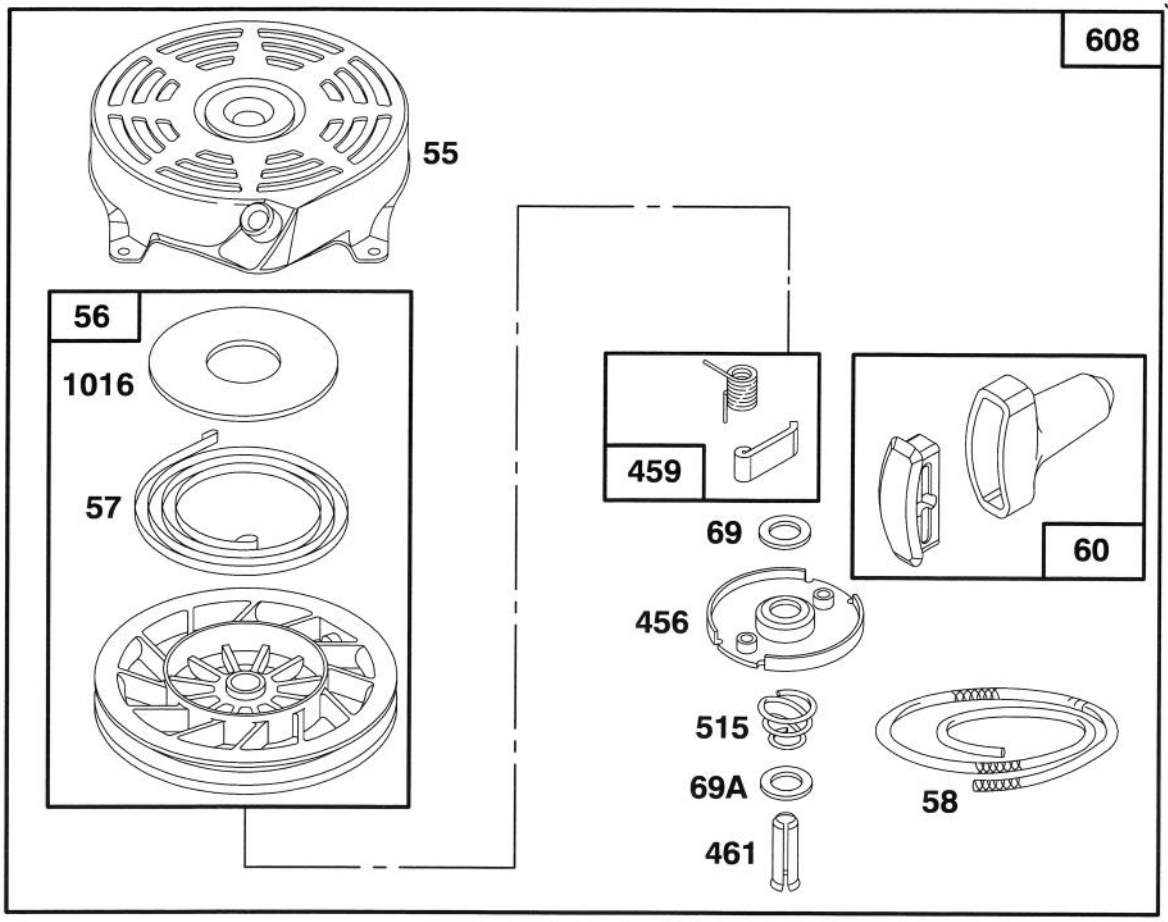

Assemblies include all parts shown in frames.

ENGINE BRIGGS & STRATTON MODEL 127702–0131–01

Ref. No.	Part No.	Description	No. Used
55	492831	Housing – Rewind Starter	1
56	493824	Pulley – Rewind Starter	1
57	262594	Spring – Rewind Starter	1
58	280399	Rope – Rewind Starter	1
60	393152	Handle – Rewind Starter	1
69	280973	Washer – Rewind Starter	1
69A	224322	Washer – Rewind Starter	1
456	224321	Retainer – Rewind Starter	1

Ref. No.	Part No.	Description	No. Used
459	492833	Pawl – Starter	1
461	262626	Pin – Starter	1
515	262625	Spring – Torsion	1
608	493295	Starter Ass'y – Rewind **Includes:**	
		94128 Screw – Hex Hd.	
		92987 Nut – Hex	1
1016	224278	Cover – Rewind Starter	1

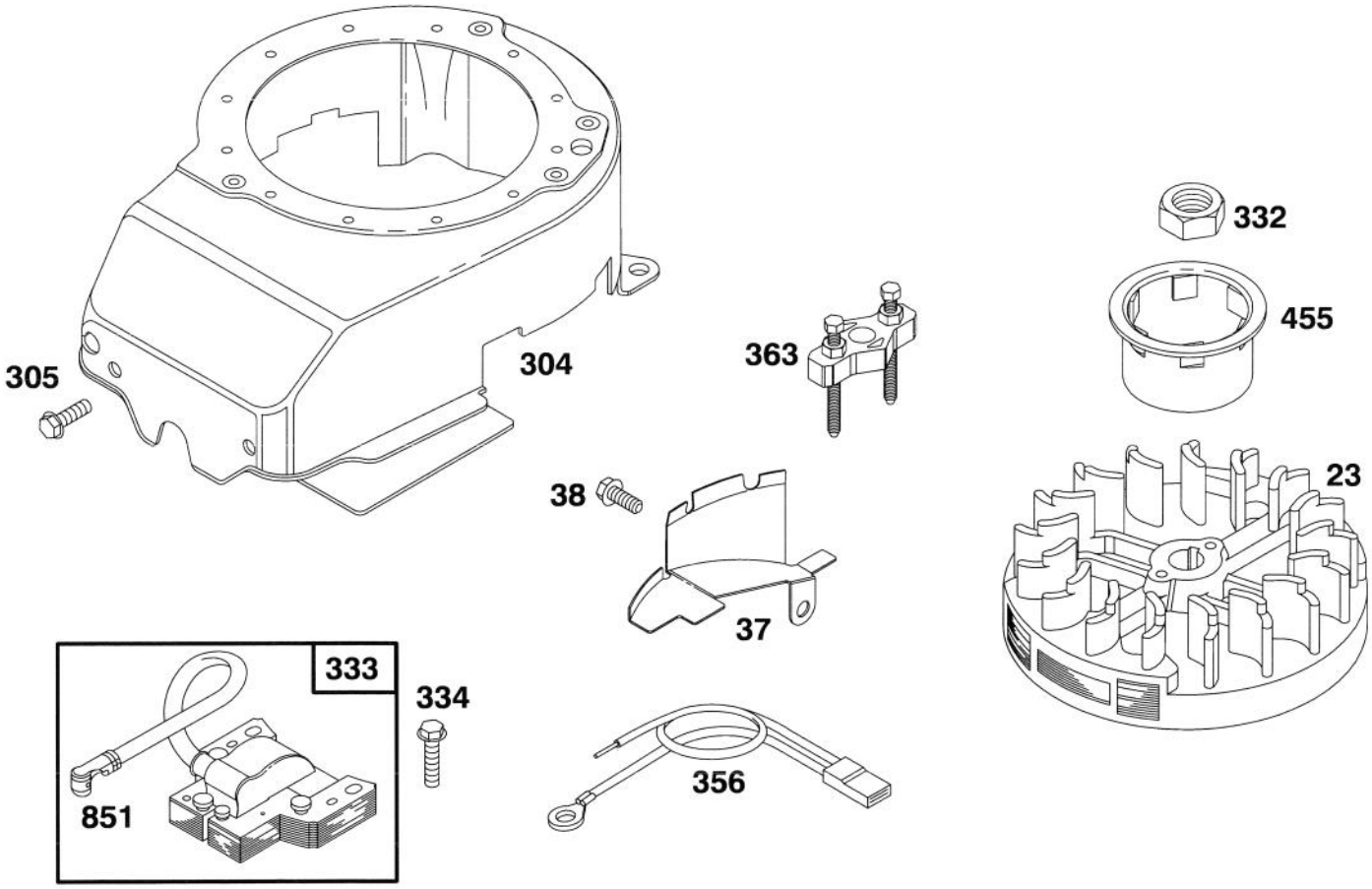

Assemblies include all parts shown in frames.

ENGINE BRIGGS & STRATTON MODEL 127702–0131–01

Ref. No.	Part No.	Description	No. Used
23	492177	Flywheel	1
37	224511	Guard – Flywheel	1
38	94608	Screw – Hex Hd.	1
304	493293	Housing – Blower	1
305	94786	Screw – Sem	1
332	92284	Nut – Flywheel	1

Ref. No.	Part No.	Description	No. Used
333	802574	Armature – Magneto	1
334	94731	Screw – Sem	1
356	398808	Wire – Ground	1
363	19069	Puller – Flywheel	1
455	224250	Cup – Starter	1
851	493880	Terminal – Ignition Cable	1

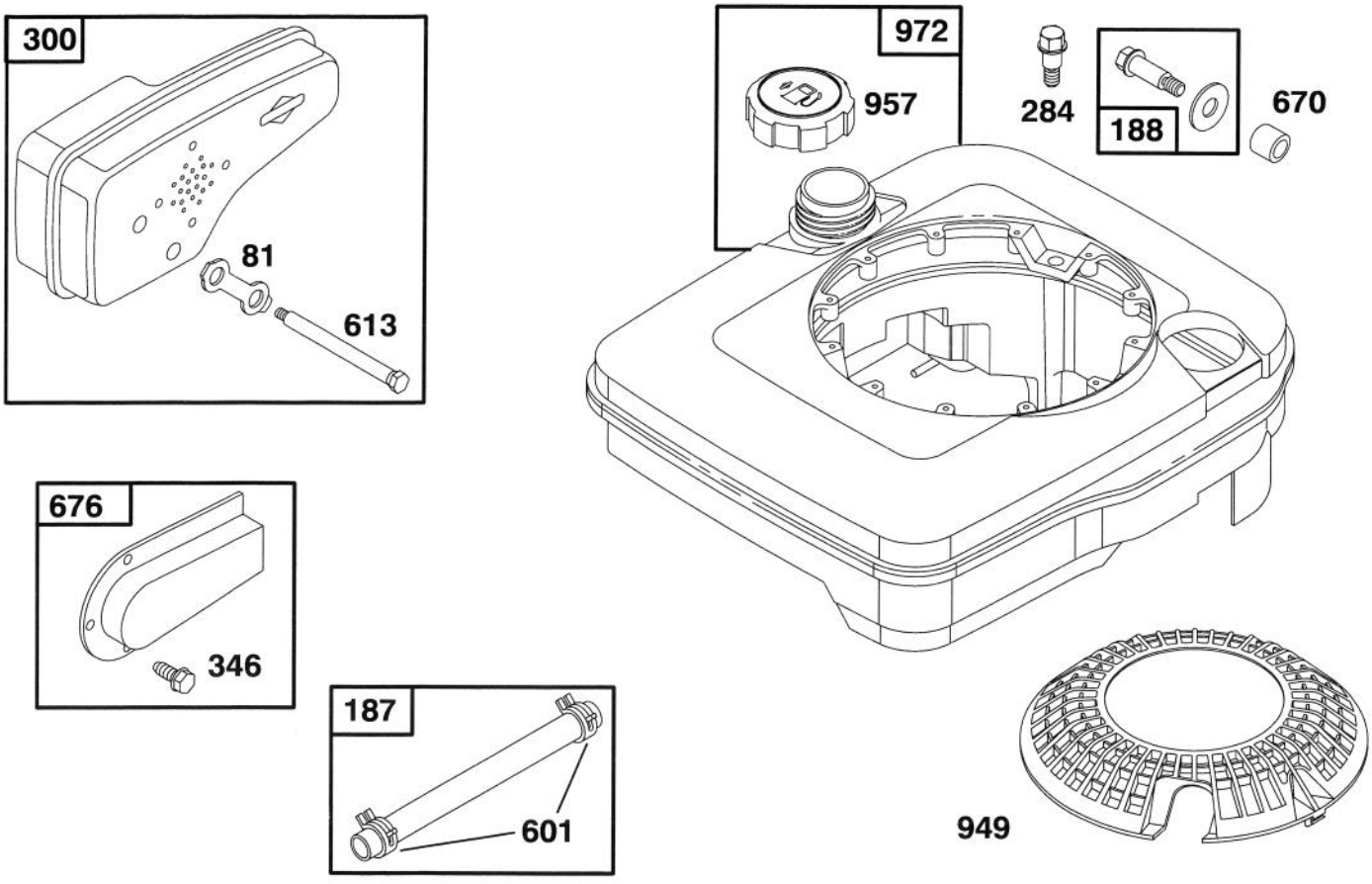

Assemblies include all parts shown in frames.

ENGINE BRIGGS & STRATTON MODEL 127702–0131–01

Ref. No.	Part No.	Description	No. Used
81	223664	Lock – Muffler Screw	1
187	492790	Hose – Fuel	1
188	398540	Screw – Tank Mounting	1
284	94511	Screw – Hex Head	1
300	496106	Muffler – Exhaust	1
346	93705	Screw – Hex Head	1
601	93807	Clamp – Hose	1

Ref. No.	Part No.	Description	No. Used
613	94231	Screw – Muffler Mtg.	1
670	280512	Spacer – Fuel Tank	1
676	493871	Deflector – Muffler	1
949	281136	Guard – Finger	1
957	397974	Cap Assy. – Fuel	1
972	495509	Tank Assembly – Fuel	1

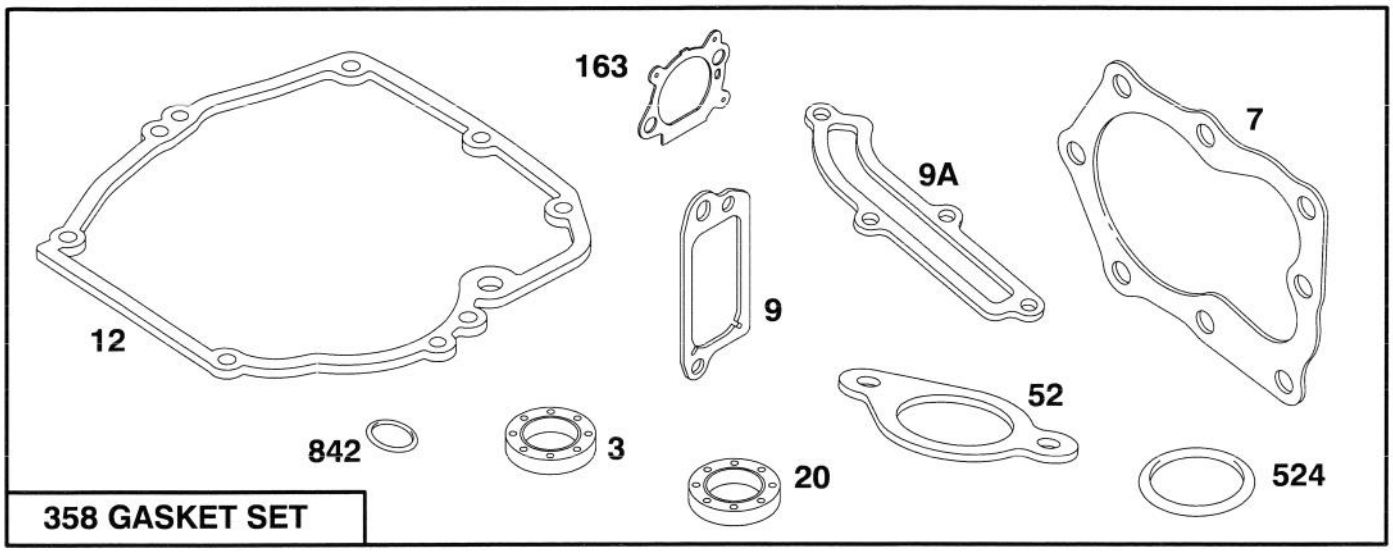

358 GASKET SET

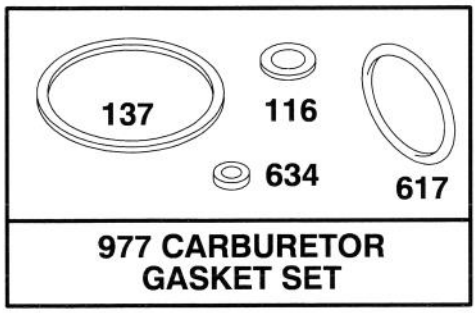

977 CARBURETOR GASKET SET

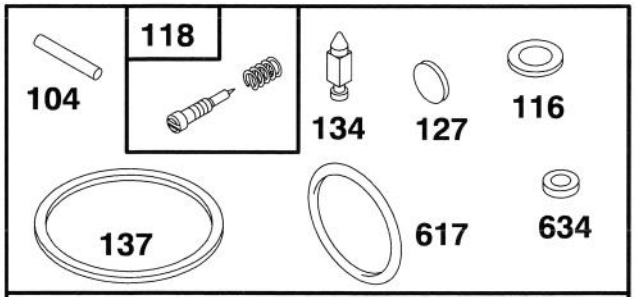

121 CARBURETOR KIT

Assemblies include all parts shown in frames.

ENGINE BRIGGS & STRATTON MODEL 127702–0131–01

Ref. No.	Part No.	Description	No. Used
★3	299819	Seal – Oil	1
★7	272200	Gasket – Cylinder Hd.	1
★9	272481	Gasket – Valve Cover	1
★9A	272238	Gasket – Baffle Plate	1
★12	272198	Gasket – Crankcase	1
★20	399781	Seal – Oil	1
★52	272199	Gasket – Intake Elbow	1
●104	231371	Pin – Float Hinge	1
●◆116		Gasket – Sealing (Sold in Kit Only)	1
●118	493765	Valve – Needle	1
121	493762	Carburetor Kit	1
●127		Plug – Welch (Sold in Kit Only)	1
●134	398188	Valve – Inlet (Includes Seat)	1
●◆137		Gasket – Bowl (Sold in Kit Only)	1
★163	272653	Gasket – Air Cleaner	1
358	496117	Gasket Set	1
★524	280393	Seal – Filler Tube	1
●◆617	270344	Seal – Fuel Intake Tube	1
●◆634		Washer – Shaft (Sold in Kit Only)	1
★842	280966	Seal – O-Ring	1
977	490937	Gasket Set – Carburetor	1

● Included in Carburetor Kit–Part No. 493762.
◆ Included in Carburetor Gasket Set–Part No. 490937.
★ Included in Gasket Set–Part No. 496117.

TORO PART NUMBER INDEX

Part No.	Description	Pg. No.	Ref. No.	Qty.
614578	Gearcase	4	10	1
614596	Gear 34 Tooth	4	18	1
614668	Cover – Gear Case	4	2	1
614696	Shaft – Intermediate	4	4	1
14–9959	Wheel, Tire & Gear Assy.	3	22	2
16–5979	Housing – 48cm	1	2	1
16–8309	Panel – Control	5	22	1
19–4050	Knob	5	19	2
26–0672	Bolt – Blade	2	12	1
27–6230	Bolt – Wheel	3	23	2
27–6230	Bolt – Wheel	1	30	2
27–6250	Bushing – Wheel	3	24	4
27–6250	Bushing – Wheel	1	28	4
36–4780	Washer – Thrust	4	17	3
36–4791	Washer	4	5	2
38–7820	Bearing – Ball	4	15	1
40–1940	Washer – Wheel	1	27	2
46–1113	Wheel & Tire Assembly	1	29	2
46–5520	Lever – Traction	5	4	1
46–6432	Screw – Handle	5	11	1
46–6435	Screw – Handle	5	21	1
46–6980	Support – Cable	5	14	1
46–8081	Guide – Rope	5	17	1
47–2890	Bushing – Sleeve	3	4	2
47–6730	Seal – Grease	3	5	2
48–2060	Bearing – Needle	3	14	2
49–2040	Screw – Taptite	4	1	4
55–3760	Pinion – 15 Tooth	4	3	1
60–8750	Bushing	4	6	2
60–8850	Bushing – Output	4	9	2
60–8890	Gear – Bevel Pinion	4	16	1
62–6660	Spacer	4	11	1
62–7550	Pulley – Driver	2	14	1
63–8590	Screw – Thread Forming	3	12	2
65–2720	Ring – Retaining	3	17	4
65–4710	Washer – Friction	3	15	2
65–4720	Spring – Compression	3	20	2
65–4740	Washer – Keyed Thrust	3	16	4
65–4750	Gear – Pinion	3	19	2
65–4760	Washer – Clutch	3	26	2
65–5210	Screw – Thread Forming	1	12	2
66–0680	Decal – French Regulation	1	19	1
66–6040	Key – Rocking R.H.	3	*	1
66–6050	Key – Rocking L.H.	3	18	1
71–7630	Cap – Throttle Lower	5	8	1
71–7740	Spring – Counterbalance	3	31	1
71–7770	Plate – Rear Securing	3	27	2
71–7820	Pivot – Front	1	25	1
71–7840	Rod – Trigger	3	8	1
71–7860	Grip – Upper	1	13	1
71–7870	Grip – Lower	1	6	1
71–7890	Guide – Belt Rear	1	21	1
71–7900	Cap – Hinge Bolt L.H.	1	16	1
71–7910	Cap – Hinge Bolt R.H.	1	11	1
71–7920	Cover – Belt	1	3	1
71–7930	Trigger – H.O.C.	1	7	1
71–7940	Retainer – Blade	2	8	1
71–7960	Guide – Engine Belt	2	13	1
71–7970	Rod – Link	3	30	1
71–7980	Indicator – H.O.C.	3	33	1
71–7990	Ramp – Discharge	1	22	1
71–8040	Plate – Throttle	5	3	1
71–8060	Spring – Trigger Return	3	10	2
71–8080	Saddle – H.O.C.	3	11	1
71–8090	Mount – Handle L.H.	5	*	1
71–8100	Mount – Handle R.H.	5	18	1
71–8310	Spring – Compression	5	24	1
71–8450	Cover – Spring	3	32	1
71–8580	Spacer – Door	1	20	2
71–8830	Retainer – Shaft	1	24	2
71–9023	Handle Assembly	5	20	1
71–9450	V–Belt	3	34	1
71–9460	Bag – Grass	7	5	1
71–9470	Door – Bag	7	3	1
71–9480	Handle – Door	7	2	1
71–9600	Gear Case Ass'y Complete	4	*	1
71–9600	Gearcase Assembly	3	35	1
71–9610	Pulley – Half	4	12	2
71–9620	Shaft – Output	4	7	1
71–9630	Bracket – Traction	3	36	1
71–9800	Door – Discharge	1	15	1
71–9840	Spring – Door	1	18	2
71–9850	Retainer – Belt	3	3	1
71–9860	Decal – 48cm	1	1	1
71–9861	Decal – Panel	5	23	1
71–9900	Frame – Bag	7	4	1
74–1660	Cover – Wheel	3	21	2
74–1670	Spacer – Wheel	3	25	2
86–7990	Screw – Clamp	2	15	1
92–2298	Washer – Spring	6	4	1
92–2299	Lever – Shift	6	5	1
92–3132	Bolt – Shoulder	6	8	1
92–3133	Spacer – Traction Lever	6	9	1
92–7852	Shield – Muffler	2	3	1
92–8655	Decal – Engine	2	2	1
92–9077	Decal – DIN	1	4	1
92–9677	Rear Pivot Assembly L.H.	3	6	1
92–9680	Rear Pivot Assembly R.H.	3	1	1
92–9812	Stiffener – Blade	2	10	1
92–9813	Blade – 48cm	2	9	1
93–0335	Bail – Control SP	6	1	1
93–0339	Cover – throttle Lower	5	7	1
93–0340	Stop – Pivot	6	6	1
93–1116	Cable – Brake	5	12	1
93–1117	Control – Throttle	5	2	1
93–1119	Cable – Traction	5	10	1
93–1120	Decal – Instruction	5	1	1
93–3241	Decal – Traction	6	10	1
2210–249	Clamp – Cable	2	16	1
2210–316	Stop – Rope	2	17	1
302–26	Fitting – Grease	3	2	2
322–29	Screw – Cap Hex. Hd.	1	17	2
3253–22	Washer – Lock	2	11	1
3256–22	Washer – Flat	5	15	1
3256–24	Washer	4	13	1
3256–49	Washer – Flat	6	3	1
3256–70	Washer – Flat	6	7	2
3284–5	Pin – Roll	1	8	1
3290–378	Tie – Cable	2	4	1
3290–378	Tie – Cable	5	13	1
3296–2	Nut – Lock	6	2	1
3296–5	Nut	4	14	1
3296–5	Nut – Lock	3	7	2
3296–5	Nut – Lock	1	26	2

*Not Illustrated

TORO PART NUMBER INDEX (Cont.)

Part No.	Description	Pg. No.	Ref. No.	Qty.
3296-42	Nut – Lock	5	16	2
32112-11	Nut – Push	1	23	1
32112-13	Nut – Push	3	13	1
32121-114	Pin – Spirol	4	8	2
32144-4	Screw – Thr'd Forming	2	7	2
32144-4	Screw – Thread Forming	1	10	10
32144-4	Screw – Thread Forming	3	28	6
32144-31	Screw – Thread Forming	3	9	1
32144-70	Screw – Hex. Flange Hd.	1	5	1
32144-73	Screw – Muffler	2	5	3
32144-97	Screw – Phillips Pan Hd.	5	6	5
32144-97	Screw – Thread Forming	1	14	2
32144-98	Screw – Phillips Pan Hd.	5	5	4
32144-99	Screw – Phillips Pan Hd.	5	9	2
32144-102	Screw – Engine Mount	2	6	3
32144-111	Screw – Thr'd Form	7	1	5
32151-93	Ring – Grip	3	29	1

*Not Illustrated

PRODUCT CHANGES

In an effort to make improvements available to TORO owners as quickly as possible, minor changes are incorporated into Toro's products from time to time that do not become immediately shown in the Parts Catalog. If such a change has been made in your unit, which is not reflected in your manual, see your TORO Distributor or his Authorized TORO Service Dealer for information and part numbers.

COUNTRIES OTHER THAN THE UNITED STATES OR CANADA

Customers who have purchased TORO products exported from the United States or Canada should contact their Toro Distributor (Dealer) to obtain guarantee policies for your country, province or state. If for any reason you are dissatisfied with your Distributor's service or have difficulty obtaining guarantee information, contact the TORO importer. If all other remedies fail, you may contact us at The Toro Company.

MAINTENANCE RECORD

Date								

Compliance with Radio Interference Regulations Certified.
Certifie Conforme au Reglement sur le Brouillage Radioelectrique.

Litho in U.S.A.

MAINTENANCE RECORD

Date								