Form Number 3360-139 Rev B

Greensmaster® 1000 Mower

Model No. 04052 - 280000001 and up.

Parts Catalog

Ordering Replacement Parts

To order replacement parts, please supply the part number, the quantity, and the description of each part desired.

Understanding Reference Numbers

Each Identified part in an illustration has a reference number. The reference number for a part also appears in the parts list, along with other information about the part.

This catalog uses two special reference number formats, one to indicate parts in a service assembly and another to indicate the quantity of a given part in an illustration.

Service Assembly Reference Numbers

Parts in service assemblies have reference numbers in the form a:b. The a represents the reference number of the entire service assembly and the b represents a sequential number unique to each part within the service assembly.

For example, a wheel assembly might be identified by reference number 6, the tire by 6:1, the valve by 6:2, and the wheel by 6:3. When you order the assembly identified by reference number 6, you receive all parts identified by reference numbers 6:1, 6:2, and 6:3. However, you may also order any part individually. Reference numbers of this type appear in illustrations and in part lists.

Reference Numbers Indicating Quantity

In an illustration, if a reference number indicates more than one part, the reference number has the form nX y. The n represents the quantity of the part, the X is the multiplication symbol, and the y represents the reference number.

For example, in an illustration, the reference number 2X 37 means that two of the parts identified by reference number 37 are indicated.

© The Toro Company - 2009
All Rights Reserved

Register your product at www.Toro.com

Contents

Description	Page
Frame Assembly	3
Engine Mount and Frame Assembly	4
Reel Drive Assembly	5
Reel Assembly	7
Drum Drive Assembly	8
Drum and Basket Assembly	10
Differential Assembly No. 93-6055	11
Inner Countershaft Assembly	12
Outer Crankshaft Assembly	13
Engine Assembly	14
Bellcrank Assembly	15
Handle Assembly	16
Cylinder and Crankcase Assembly	17
Piston and Crankshaft Assembly	18
Valve and Camshaft Assembly	19
Lubrication Equipment Assembly	20
Cooling Equipment Assembly	21
Electric Equipment Assembly	22
Control Equipment Assembly	23
Carburetor Assembly	24
Air Filter and Muffler Assembly	25
Fuel Tank and Valve Assembly	26
Starter Assembly	27
Label Set	28
Attachments and Accessories List	29

Part Description Abbreviations

Part descriptions in this catalog may include the following abbreviations.

AR. . . . . as required
ASM. . . . . assembly
BBC. . . . . blade brake clutch
CARR. . . . . carriage
CCW. . . . . counter clock wise
CW. . . . . clockwise
DEG. . . . . degrees
ECM. . . . . electronic control module
EXT. . . . . external
FH. . . . . flat head
GA. . . . . gauge
HD. . . . . heavy-duty
HF. . . . . hex flange
HH. . . . . hex head
HHF. . . . . hex head flange
HHFTF. . . . . hex head flange thread forming
HJ. . . . . hex jam
HLH. . . . . hex lag head
HOC. . . . . height-of-cut
HSBH. . . . . hex socket button head
HSFH. . . . . hex socket flat head
HSH. . . . . hex socket head
HWH. . . . . hex washer head
HWHTF. . . . . hex washer head thread forming
HYD. . . . . hydraulic
LH. . . . . left hand
NI. . . . . nylon insert
NPTF. . . . . national pipe thread fine
PFH. . . . . phillips flat head
PPH. . . . . phillips pan head
PPHTF. . . . . phillips pan head thread forming
PRH. . . . . phillips round head
PTH. . . . . phillips truss head
PTO. . . . . power-take-off
RH. . . . . right hand
ROPS. . . . . roll-over protection system
SFH. . . . . slotted fillister head
SHH. . . . . slotted hex head
SHWH. . . . . slotted hex washer head
SPH. . . . . slotted pan head
SQH. . . . . square head
SRH. . . . . slotted round head
STD. . . . . standard
TAP. . . . . self tapping
TTH. . . . . torx truss head

Footnotes

❶ Not serviced separately

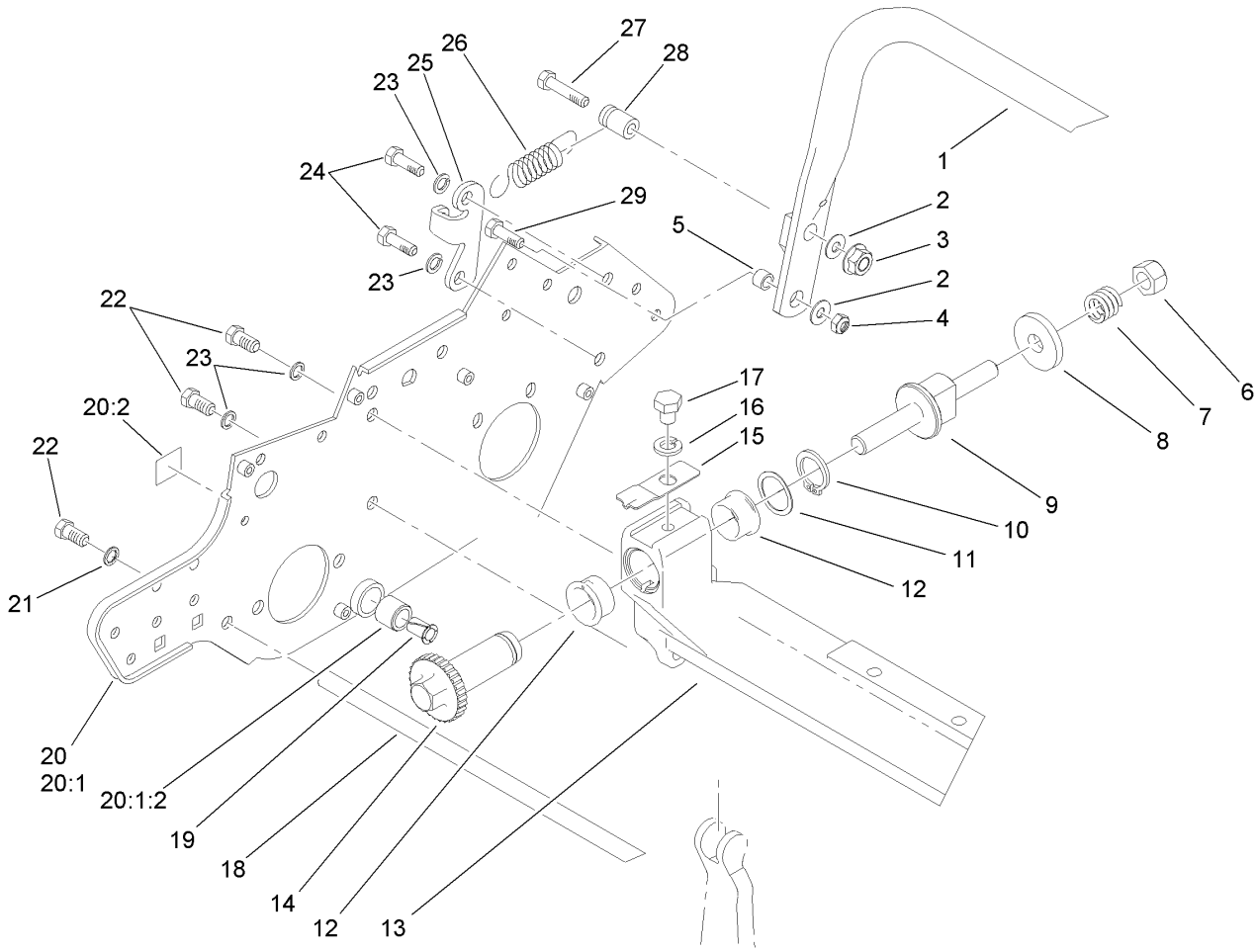

Frame Assembly

Ref	Part No.	Qty.	Description
1	65-7850-03	1	Kickstand ASM
2	3256-2	3	Washer-Flat
3	32128-25	1	Nut-HF
4	3296-29	2	Nut-Lock, NI
5	65-7910	2	Spacer
6	33025-00	2	Nut-Lock
7	99-3755	2	Spring-Compression
8	99-2098	2	Washer
9	99-2096	2	Screw-Adjuster, Bedbar
10	32120-93	2	Ring-Retaining
11	106-5335	2	Washer-Wave
12	106-5344	4	Bushing-Flange, Keyed
13	112-9272-01	1	Crossmember
14	106-5363	2	Shaft-Adjuster
15	99-2097	2	Detent
16	3253-4	2	Washer-Lock
17	322-26	2	Screw-HH
18	88-7110	1	Rod-Support, Frame
19	52-2890	2	Bushing-Nylon
20	93-6093	1	RH Side Plate ASM
❶20:1		1	RH Sideplate/Bushing ASM
20:1:2	63-9510	1	Bushing
20:2	93-9356	2	Decal-Warning, Belt
20:2	93-9389	2	Decal-Warning, Belt (Japan)

Ref	Part No.	Qty.	Description
21	3254-6	2	Washer-Lock, Internal
22	323-4	6	Screw-HH
23	3253-21	6	Washer-Lock
24	323-5	2	Screw-HH
25	65-7890	1	Bracket
26	65-7880	1	Spring-Extension
27	322-10	1	Screw-HH
28	65-7900	1	Retainer-Spring
29	322-5	2	Screw-HH

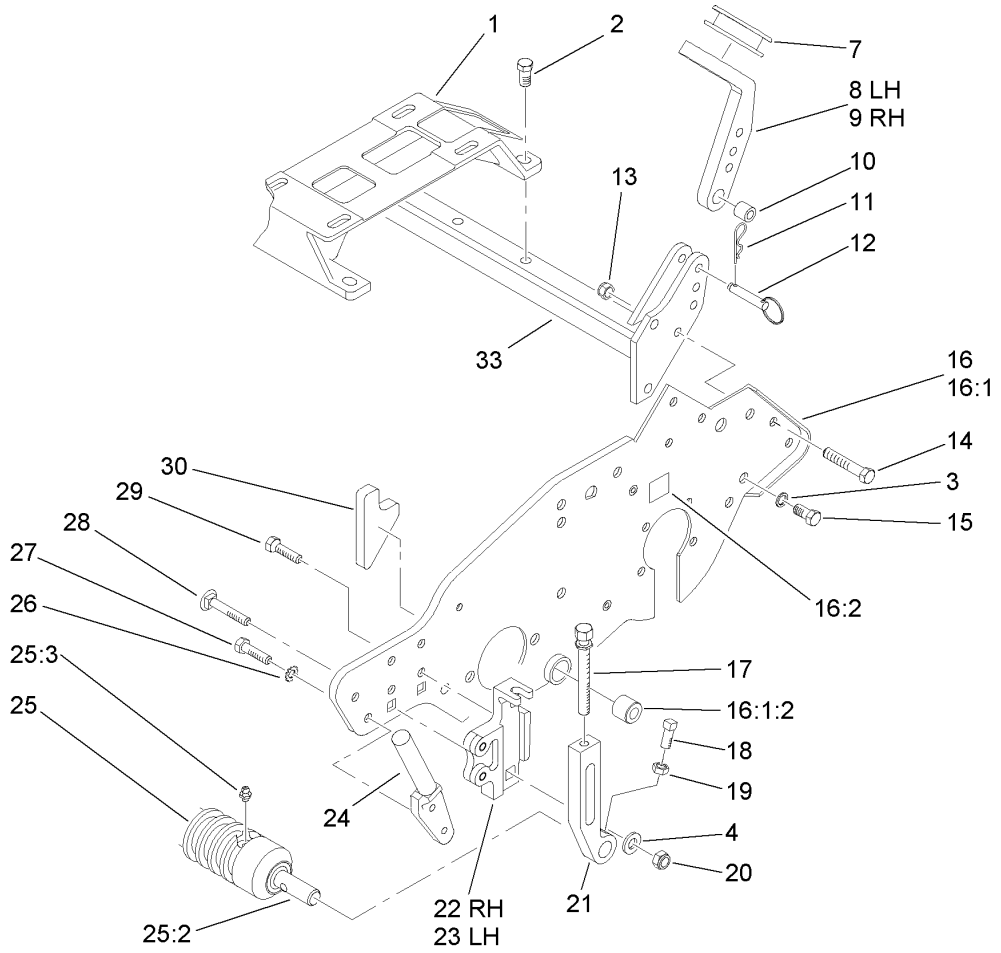

Engine Mount and Frame Assembly

Ref	Part No.	Qty.	Description
1	88-7670	1	Mount-Engine
2	3234-1	4	Screw-HHF
3	3253-21	2	Washer-Lock
4	3256-24	2	Washer-Flat
7	65-7510	2	Grommet-Handle
8	93-6038	1	Arm-Support, Handle (LH)
9	93-6037	1	Arm-Support, Handle (RH)
10	93-6024	2	Bushing-Support, Handle
11	3290-467	2	Pin-Hair
12	93-6029	2	Pin-Clevis, Ring
13	3296-29	2	Nut-Lock, NI
14	322-9	2	Screw-HH
15	323-4	2	Screw-HH
16	93-6094	1	LH Side Plate ASM
❶16:1		1	LH Sideplate/Bushing ASM
16:1:2	63-9510	1	Bushing
16:2	93-9356	1	Decal-Warning, Belt
16:2	93-9389	1	Decal-Warning, Belt (Japan)
17	93-6051	2	Screw-HOC
18	3242-4	2	Screw-Set, SQH
19	3218-2	2	Nut-Jam
20	32128-21	2	Nut-HF
21	93-6090	2	Arm-HOC
22	93-6048	1	Bracket-HOC, RH

Ref	Part No.	Qty.	Description
23	93-6049	1	Bracket-HOC, LH
24	65-8570	2	Rod-Mounting
25	99-6241	1	Wiehle Roller ASM (.20 Inch Spacing)
25:2	52-3180	2	Bearing-Roller, Front
25:3	302-5	2	Fitting-Grease
26	3255-8	4	Washer-Lock
27	322-2	4	Screw-HH
28	3231-5	2	Screw-CARR
29	92-8914	4	Bolt-Face, Tapered
30	93-6064	1	Seal-Catcher, Grass
33	93-6025-01	1	Tube-Frame, Rear

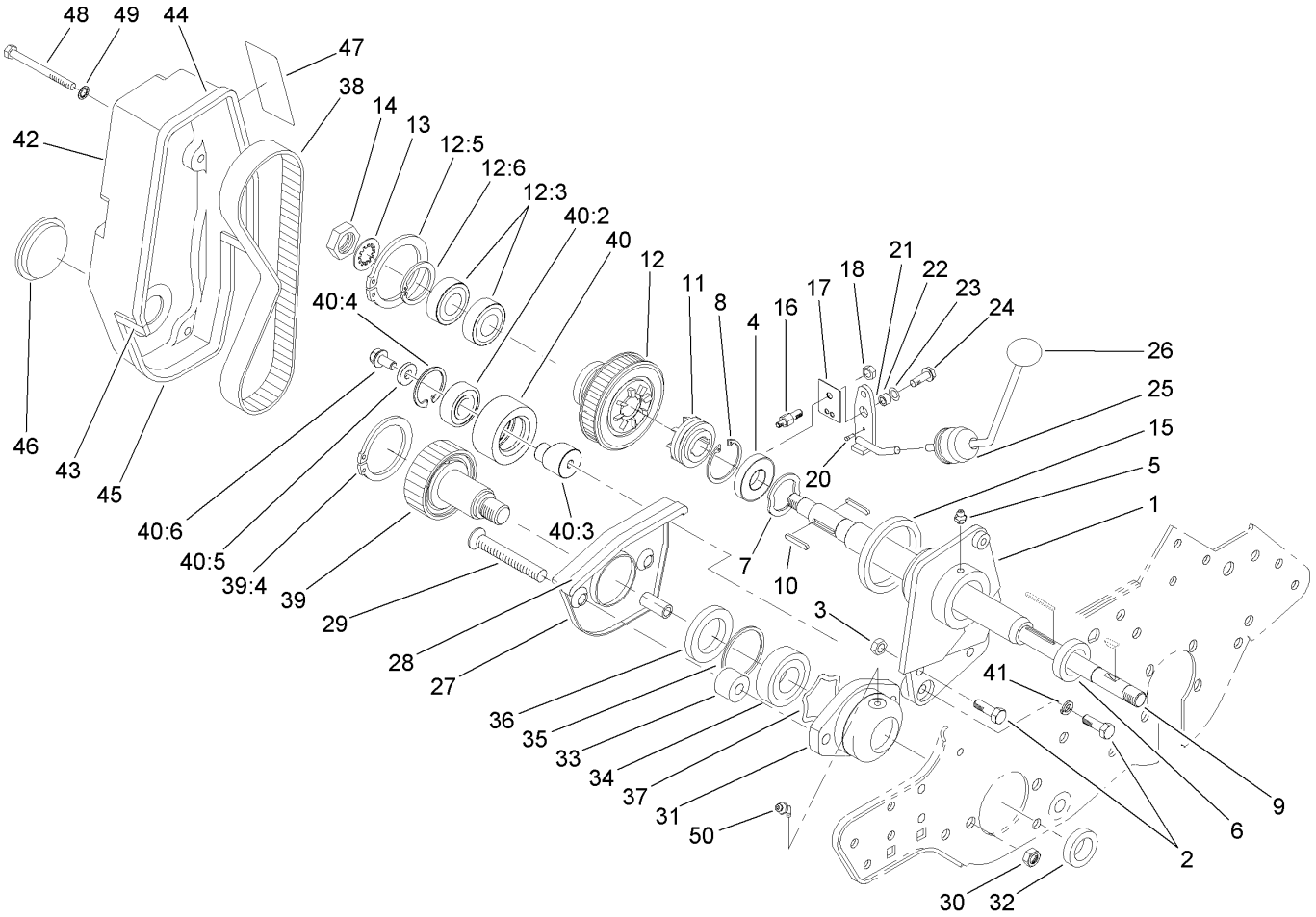

Reel Drive Assembly

Ref	Part No.	Qty.	Description
1	92-8013	1	Housing-Clutch
2	322-5	3	Screw-HH
3	3296-29	2	Nut-Lock, NI
4	251-318	1	Bearing-Ball
5	302-5	1	Fitting-Grease
6	253-118	1	Seal-Oil
7	88-7720	1	Spring-Wave
8	32151-75	1	Ring-Retaining
9	93-6056	1	Shaft-Power
10	88-7150	2	Key
11	65-6940	1	Clutch-Slider, Jaw
12	88-7830	1	Clutch And Pulley ASM
12:3	251-336	2	Bearing-Ball
12:5	32151-95	1	Ring-Retaining
12:6	32151-89	1	Ring-Retaining, Bowed
13	3254-4	1	Washer-Lock/Int
14	3219-5	1	Nut-Hex
15	65-6970	1	Seal-Felt
16	93-9014	1	Pin-Clutch, Actuator
17	65-6290	1	Spring-Detent, Clutch
18	3296-42	1	Nut-Lock, NI
20	95-5731	1	Screw-Drive
21	88-7170	1	Lever-Clutch
22	88-7860	1	Spacer

Ref	Part No.	Qty.	Description
23	3290-414	1	Washer-Belleville
24	80-0700	1	Screw
25	65-8960	1	Boot-Clutch
26	233-69	1	Knob
27	65-7190-01	1	Cover-Arm
28	65-7131	1	Seal-Cover, Strip
29	3289-23	2	Capscrew
30	3296-39	2	Nut-Lock, NI
31	65-8640	1	Housing-Bearing
32	253-96	1	Seal-Oil
33	65-8290	2	Standoff-Cover
34	251-342	1	Bearing-Ball
35	32151-92	1	Ring-Retaining
36	253-163	1	Seal
37	3290-485	1	Washer-Wave
38	65-6200	1	Belt
39	88-7840	1	Pulley And Drive ASM
39:4	32151-95	1	Ring-Retaining
40	88-7850	1	Idler Pulley ASM
40:2	38-7820	1	Bearing-Ball
40:3	88-7190	1	Spacer
40:4	32120-42	1	Ring-Retaining
40:5	88-7200	1	Washer-Flat
40:6	3234-14	1	Screw-HHF

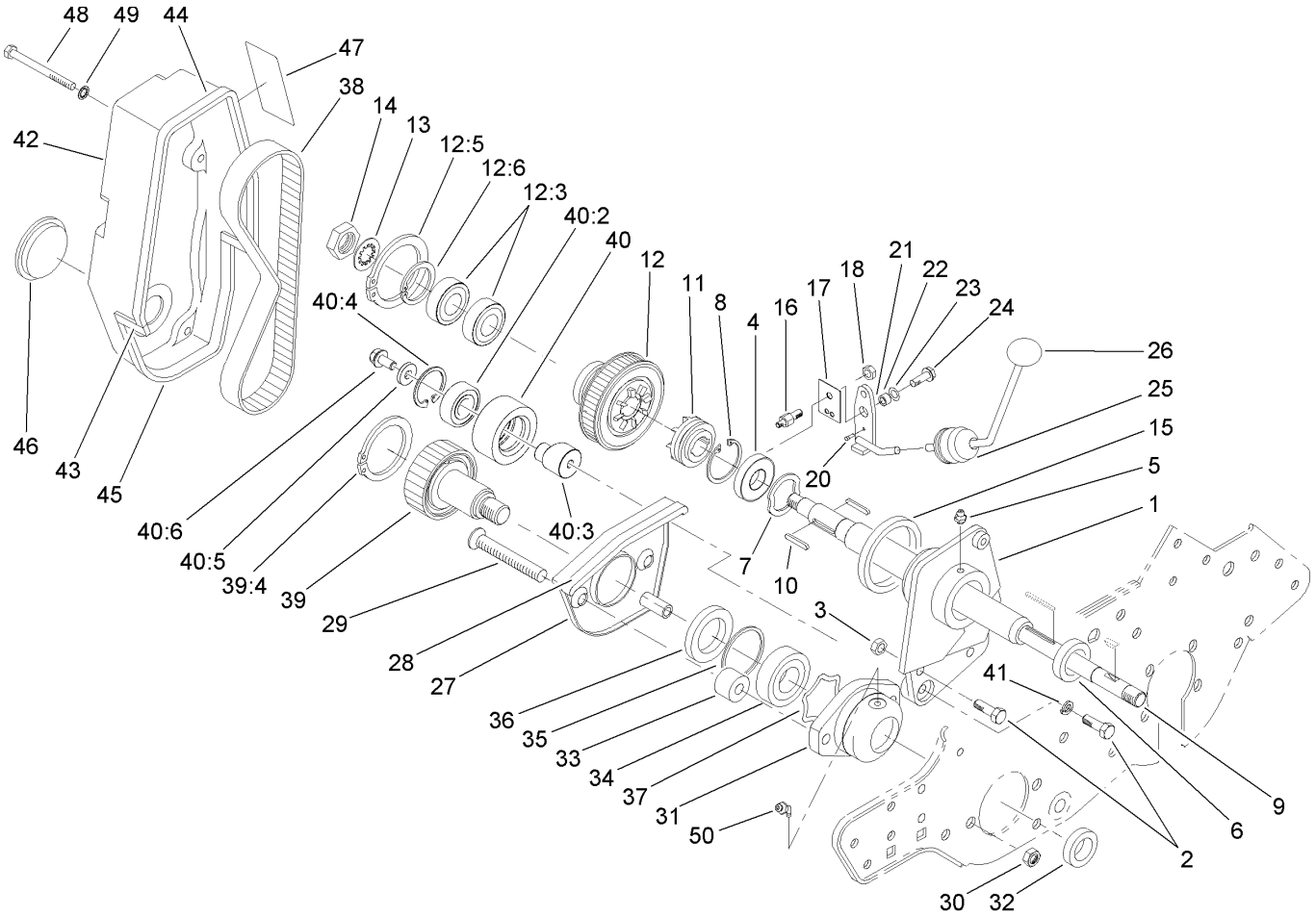

Reel Drive Assembly (continued)

Ref	Part No.	Qty.	Description
41	3254-2	1	Washer-Lock, Internal
42	88-7700-01	1	Cover-Drive, Reel
43	88-7770	2	Strip-Seal, Front
44	88-7790	1	Strip-Seal, Upper
45	88-7800	1	Strip-Seal, Lower
46	237-160	1	Plug-Rubber
47	92-4817	1	Decal-Engagement, Reel (Japan)
47	93-7346	1	Decal-Engagement, Reel
48	321-20	4	Screw-HH
49	3254-8	4	Washer-Lock
50	302-11	1	Fitting-Lube, 45 DEG

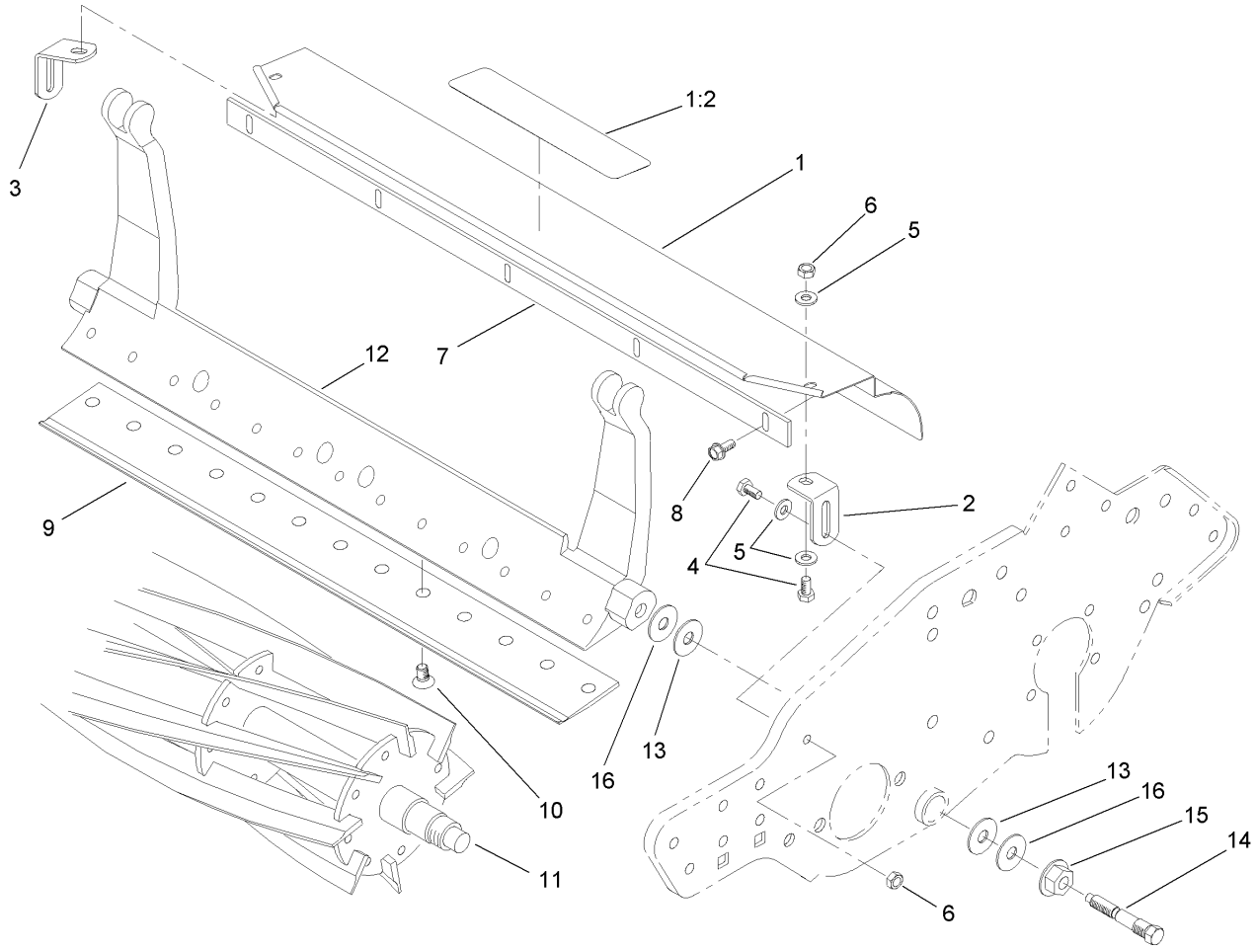

Reel Assembly

Ref	Part No.	Qty.	Description
1	112-9471	1	Grass Shield ASM
1:2	84-6560	1	Decal-Warning (Japan)
1:2	93-8064	1	Decal-Danger, Ce
2	65-6450	1	Bracket-LH
3	65-6460	1	Bracket-RH
4	321-3	4	Screw-HH
5	3256-22	6	Washer-Flat
6	3296-42	4	Nut-Lock, NI
7	36-7260	1	Bar-Off, Cut
8	104-2065	5	Screw-HWH
9	93-4263	1	Bedknife-Tournament Cut
10	57-4910	13	Screw-Special
11	93-6097	1	11 Blade Reel ASM
12	93-6053-01	1	Bedbar-Standard
13	52-2900	4	Washer-Plastic
14	65-6270	2	Bolt-Bedbar
15	32128-48	2	Nut-Lock, HHF
16	52-2860	4	Washer

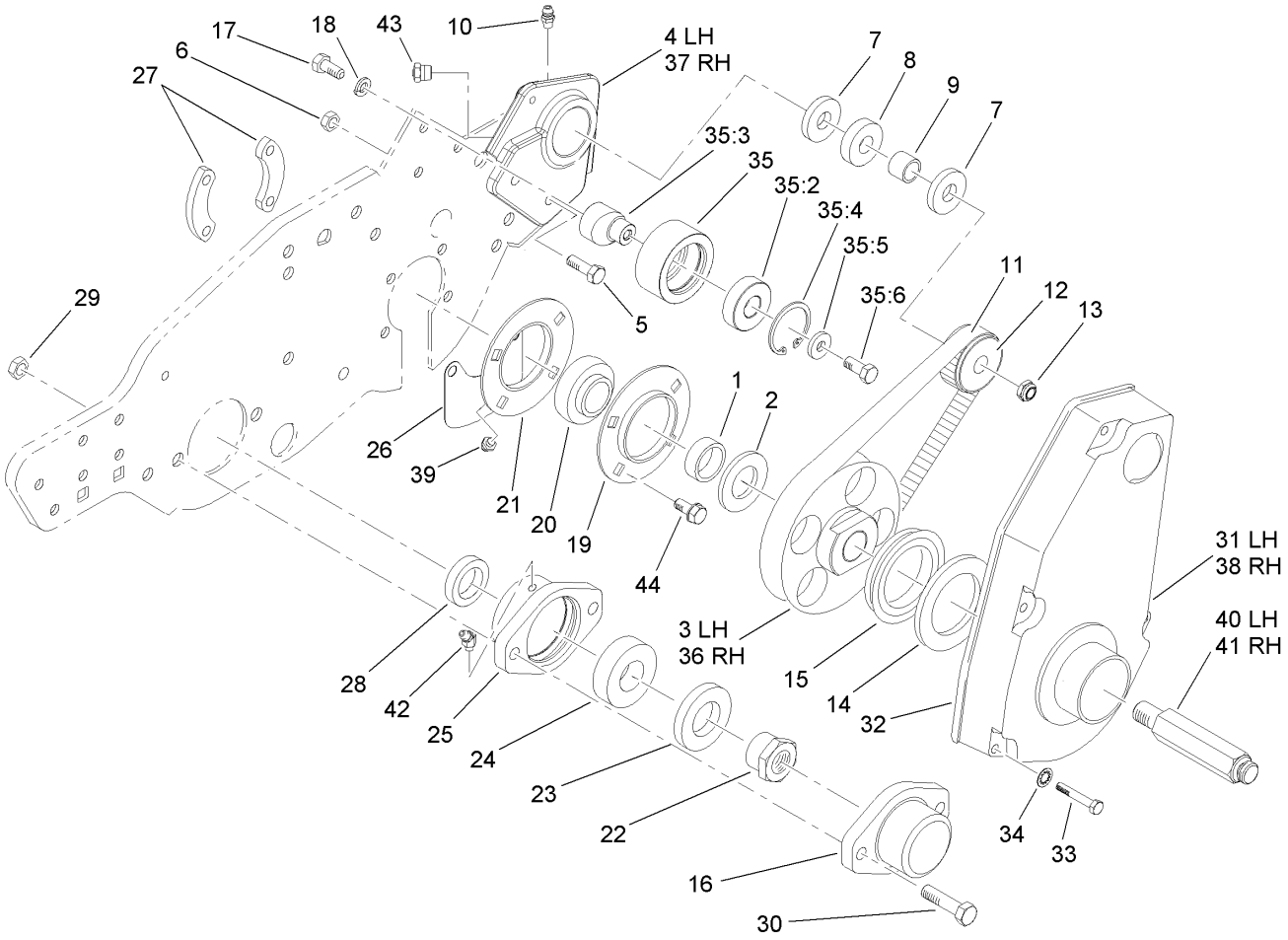

Drum Drive Assembly

Ref	Part No.	Qty.	Description
1	88-7530	2	Spacer
2	88-7540	2	Washer-Backup
3	105-5365	1	Pulley-Drum, LH
4	108-9414	1	Housing-Support, Differential (LH)
5	322-5	4	Screw-HH
6	3296-29	4	Nut-Lock, NI
7	253-160	4	Seal-Grease
8	251-338	2	Bearing-Ball
9	86-7130	2	Spacer-Pulley
10	302-5	2	Fitting-Grease
11	65-6210	2	Belt
12	65-6660	2	Pulley
13	3296-57	2	Nut-Lock, NI
14	94-9018	2	Washer-Plastic
15	253-161	2	Seal-V-Ring
16	65-6220-01	1	Cover-End, Reel
17	322-3	2	Screw-HH
18	3254-2	2	Washer-Lock, Internal
19	65-6590	2	Flangette-Bearing
20	88-7880	2	Bearing
21	95-0923	2	Flangette
22	92-7302	1	Nut-Bearing, Lock
23	253-163	1	Seal
24	251-342	1	Bearing-Ball

Ref	Part No.	Qty.	Description
25	65-8640	1	Housing-Bearing
26	65-8720	2	Closure-Plate, Side
27	65-8730	4	Clamp-Bearing
28	253-96	1	Seal-Oil
29	3296-39	2	Nut-Lock, NI
30	323-7	2	Screw-HH
31	88-7680-01	1	Cover-Belt Drum, LH
32	88-7810	2	Seal-Strip, Drum Cover
33	321-11	8	Screw-HH
34	3254-8	8	Washer-Lock
35	88-7850	2	Idler Pulley ASM
35:2	38-7820	1	Bearing-Ball
35:3	88-7190	1	Spacer
35:4	32120-42	1	Ring-Retaining
35:5	88-7200	1	Washer-Flat
35:6	3234-14	1	Screw-HHF
36	105-5364	1	Pulley-Drum, RH
37	108-9416	1	Housing-Support, Differential (RH)
38	88-7690-01	1	Cover-Drum, Belt (RH)
39	104-1843	2	Fitting-Grease, 90 DEG
40	88-7580	1	Shaft-Wheel, Transport (LH)
41	88-7590	1	Shaft-Wheel, Transport (RH)
42	302-11	1	Fitting-Lube, 45 DEG
43	302-34	2	Fitting-Lube

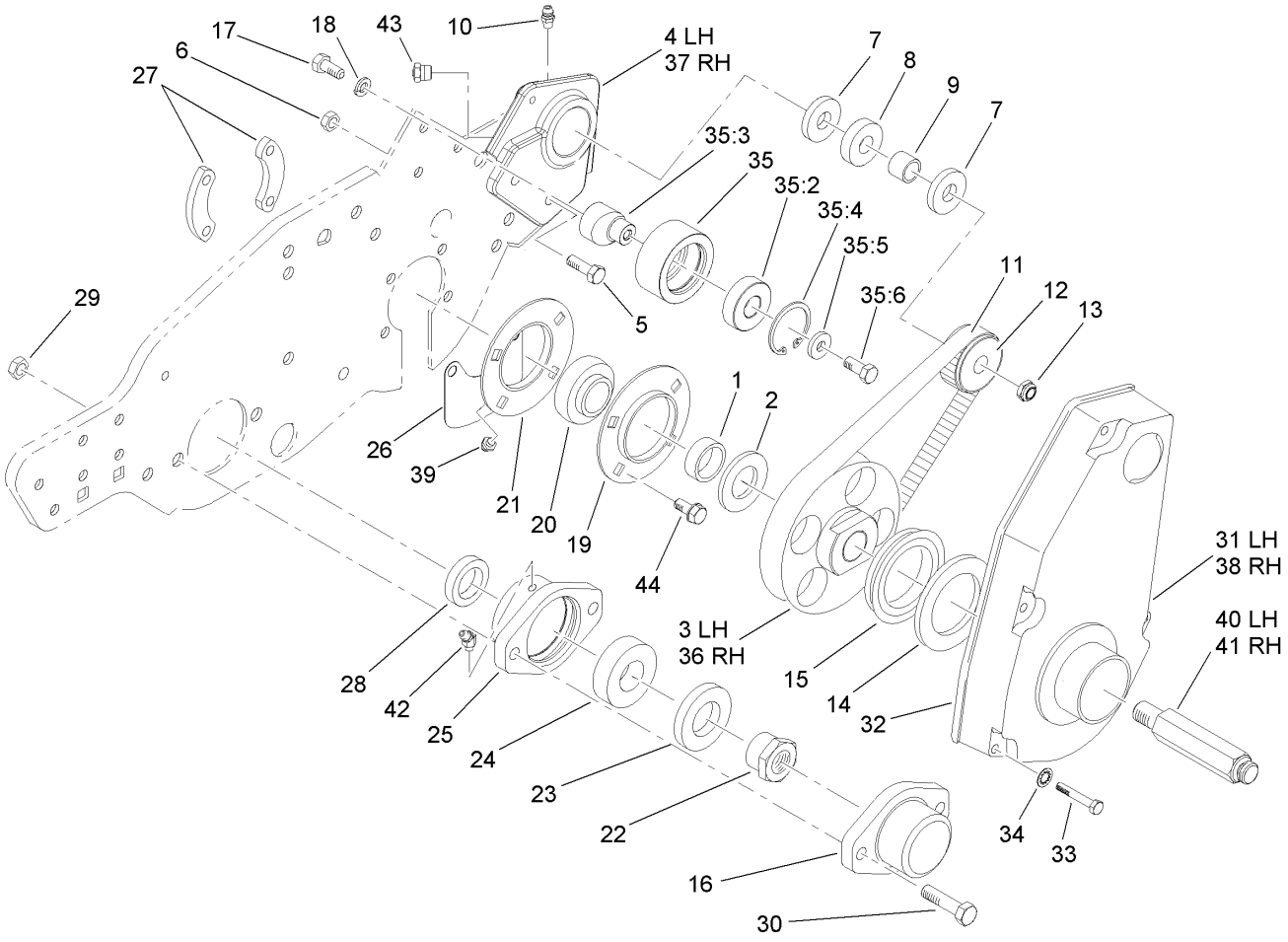

Drum Drive Assembly (continued)

Ref	Part No.	Qty.	Description
44	3234-14	8	Screw-HHF

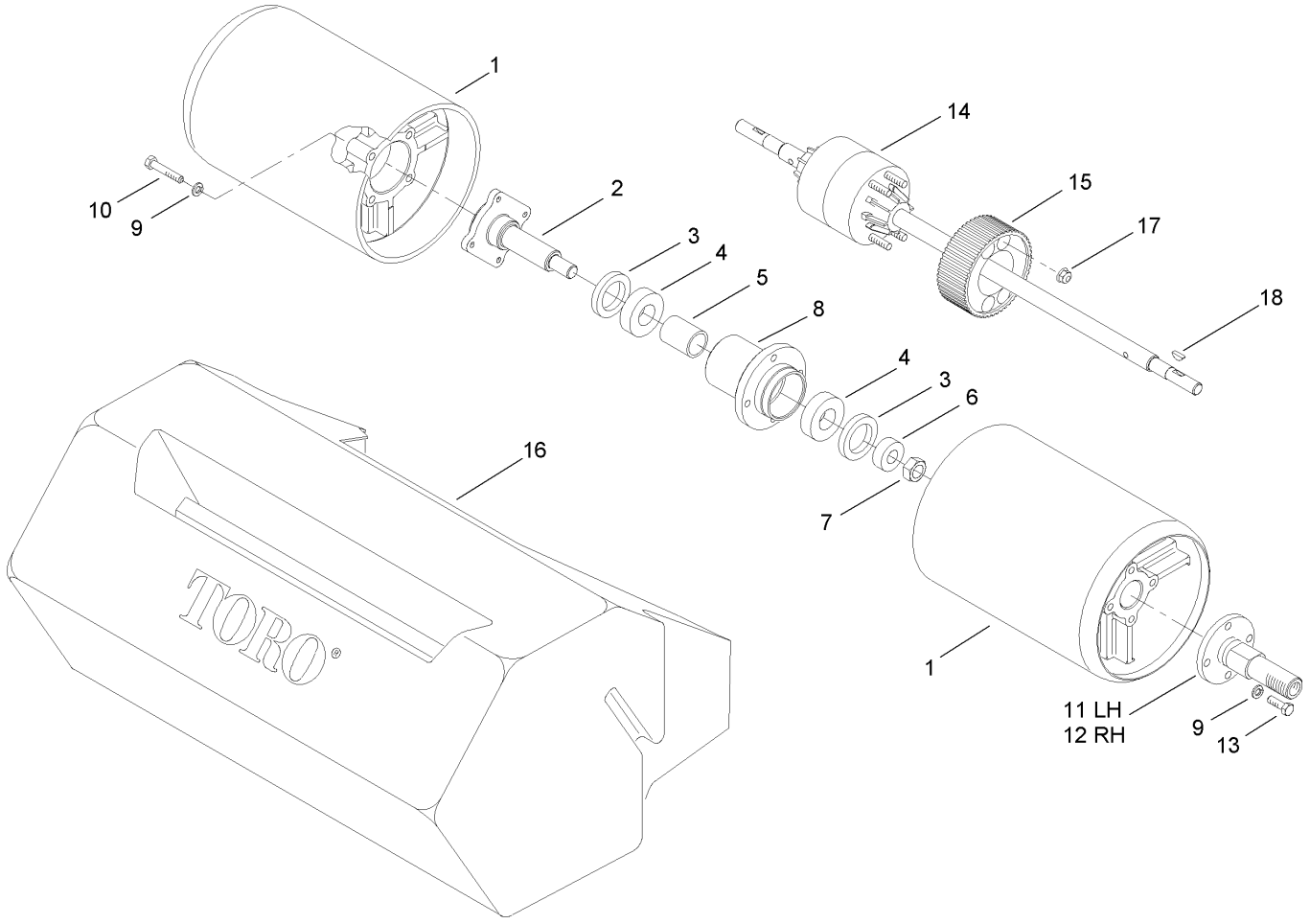

Drum and Basket Assembly

Ref	Part No.	Qty.	Description
1	93-9047	2	Drum
2	94-5850	1	Spindle-Drum
3	253-159	2	Seal
4	251-82	2	Bearing-Ball
5	65-6520	1	Spacer
6	65-6530	1	Spacer
7	3296-33	1	Nut-Lock, NI
8	94-5852	1	Hub-Drum
9	3253-4	16	Washer-Lock
10	322-9	8	Screw-HH
11	88-7520	1	Shaft-Extension, Drum (LH)
12	88-7510	1	Shaft-Extension, Drum (RH)
13	322-5	8	Screw-HH
14	93-6055	1	Differential
15	65-9120	1	Pulley-Housing, Differential
16	65-7230	1	Basket-Grass
17	104-8300	4	Nut-Flange, NI
18	3257-30	2	Key-Woodruff

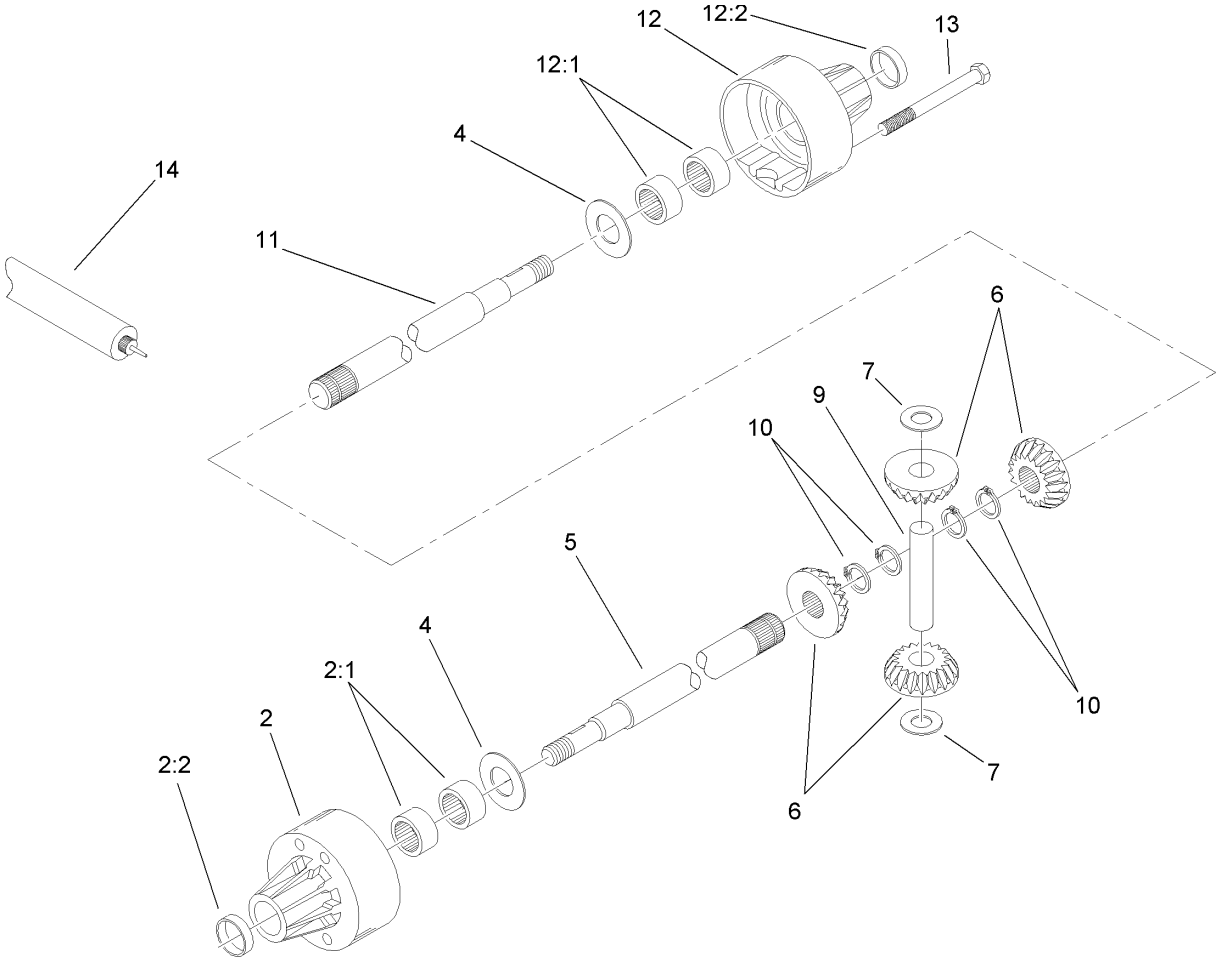

Differential Assembly No. 93-6055

Ref	Part No.	Qty.	Description
2	95-5741	1	Carrier-Differential
2:1	95-5738	4	Bearing-Needle
2:2	95-5737	2	Seal-Oil
4	95-5745	4	Washer
5	95-5736	1	Axle (Long)
6	104-0503	1	Gear Set-Differential
7	95-5744	2	Washer-Flat
9	95-5747	1	Pin-Drive
10	95-5746	4	Ring-Retaining
11	95-5735	1	Axle (Short)
12	95-5740	1	Carrier-Differential
12:1	95-5738	4	Bearing-Needle
12:2	95-5737	2	Seal-Oil
13	95-5739	4	Screw
14	95-5734	1	Grease

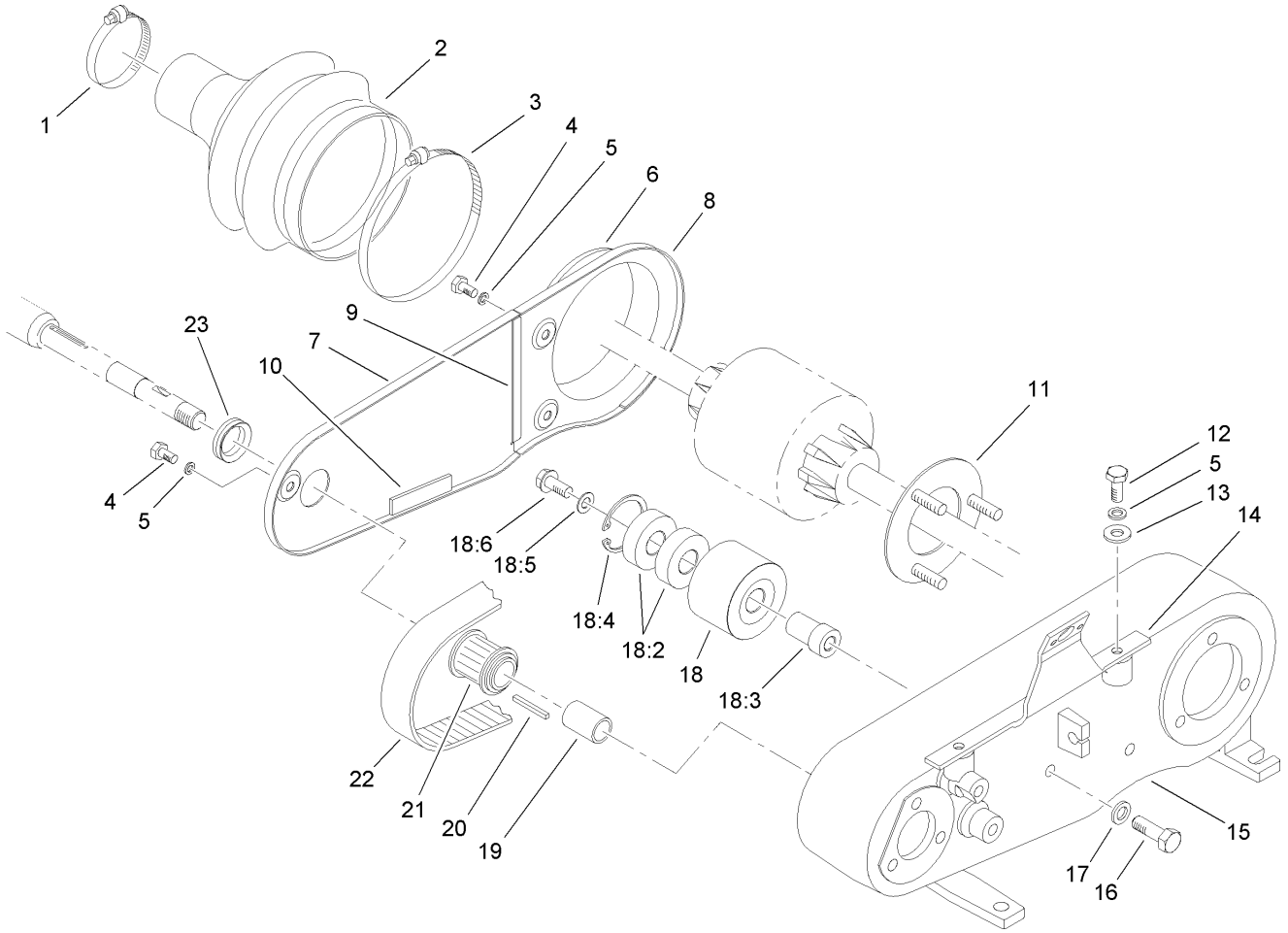

Inner Countershaft Assembly

Ref	Part No.	Qty.	Description
1	2412-139	1	Clamp-Hose
2	65-6800	1	Boot-Differential
3	2412-140	1	Clamp-Hose
4	321-2	3	Screw-HH
5	3253-3	5	Washer-Lock
6	88-7250-03	1	Cover-Box, Rear
7	88-7240-03	1	Cover-Box, Front
8	65-6902	1	Strip-Seal, Cover
9	65-6903	1	Strip-Seal, Cover
10	65-6901	1	Strip-Seal, Cover
11	65-6720	1	Plate-Screw
12	321-3	2	Screw-HH
13	3256-22	2	Washer-Flat
14	93-1448	1	Bracket Cover ASM
15	88-7230	1	Housing-Shaft, Counter
16	322-5	1	Screw-HH
17	3254-2	1	Washer-Lock, Internal
18	88-7870	1	Idler Pulley ASM
18:2	38-7820	2	Bearing-Ball
18:3	88-7380	1	Spacer-Pulley
18:4	32120-42	1	Ring-Retaining
18:5	88-7200	1	Washer-Flat
18:6	3234-14	1	Screw-HHF
19	86-7140	1	Spacer

Ref	Part No.	Qty.	Description
20	65-6850	1	Key-Square
21	65-8910	1	Pulley-Countershaft
22	65-9080	1	Belt
23	88-7710	1	Seal-V-Ring

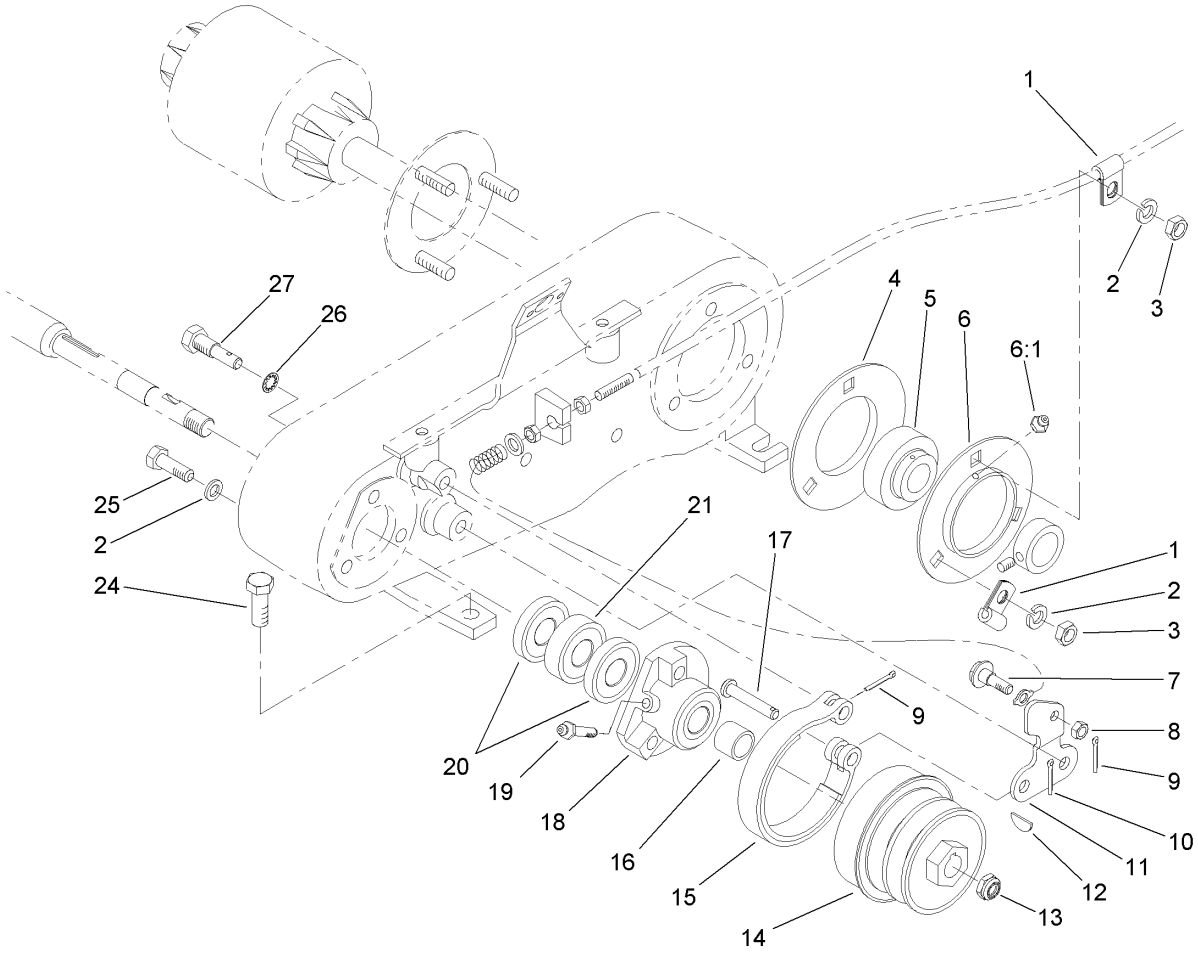

Outer Crankshaft Assembly

Ref	Part No.	Qty.	Description
1	88-7970	2	Clip
2	3253-4	3	Washer-Lock
3	32149-1	3	Nut-Keps
4	65-6710	1	Flangette-Bearing
5	108-7663	1	Bearing-Race, Extended
6	65-6700	1	Flangette-Lube
6:1	302-55	1	Fitting-Grease
7	11-9030	1	Screw-Shoulder
8	3296-42	1	Nut-Lock, NI
9	3272-6	2	Pin-Cotter
10	3272-8	1	Pin-Cotter
11	65-8610	1	Lever-Brake
12	3257-30	1	Key-Woodruff
13	3296-63	1	Nut-Lock NI
14	92-9212	1	Pulley-Shaft, Input
15	65-8700	1	Band-Brake
16	86-7130	1	Spacer-Pulley
17	283-75	1	Pin-Clevis
18	65-6760	1	Housing-Bearing
19	302-64	1	Fitting-Grease
20	253-160	2	Seal-Grease
21	251-338	1	Bearing-Ball
24	3234-1	4	Screw-HHF
25	322-5	3	Screw-HH

Ref	Part No.	Qty.	Description
26	3254-6	2	Washer-Lock, Internal
27	65-6810	2	Support-Brake

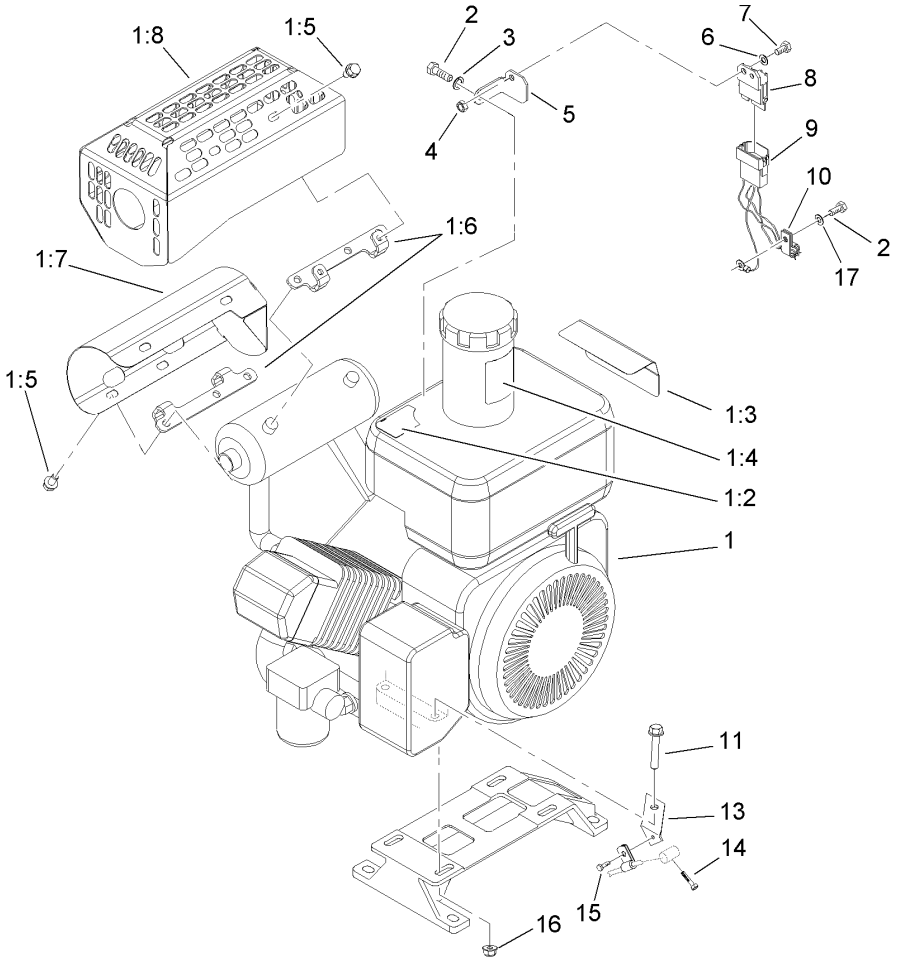

Engine Assembly

Ref	Part No.	Qty.	Description
1	115-1066	1	Engine ASM
1:2	115-1615	1	Decal-Surface, Hot
1:3	115-1613	1	Decal-Danger
1:4	93-9886	1	Decal-Fuel
1:5	104-2628	8	Screw-HWH
1:6	104-9771	2	Bracket-Guard, Muffler
1:7	110-7359	1	Muffler Shield ASM
1:8	110-7361-03	1	Guard-Muffler
2	33114-016	2	Screw-HH
3	3253-4	1	Washer-Lock
4	33023-00	1	Nut-Lock
5	94-5861	1	Bracket-Module
6	3256-22	1	Washer-Flat
7	33113-016	1	Screw-HH
8	1-323430	1	Module-Interlock
9	112-9410	1	Harness-Wire
10	2412-93	1	Clamp-R
11	94-5780	4	Screw-HWH
13	88-7960	1	Bracket-Cable, Throttle
14	94-9015	1	Screw-HH
15	104-2065	1	Screw-HWH
16	104-8300	4	Nut-Flange, NI
17	33094-00	1	Washer-Plain

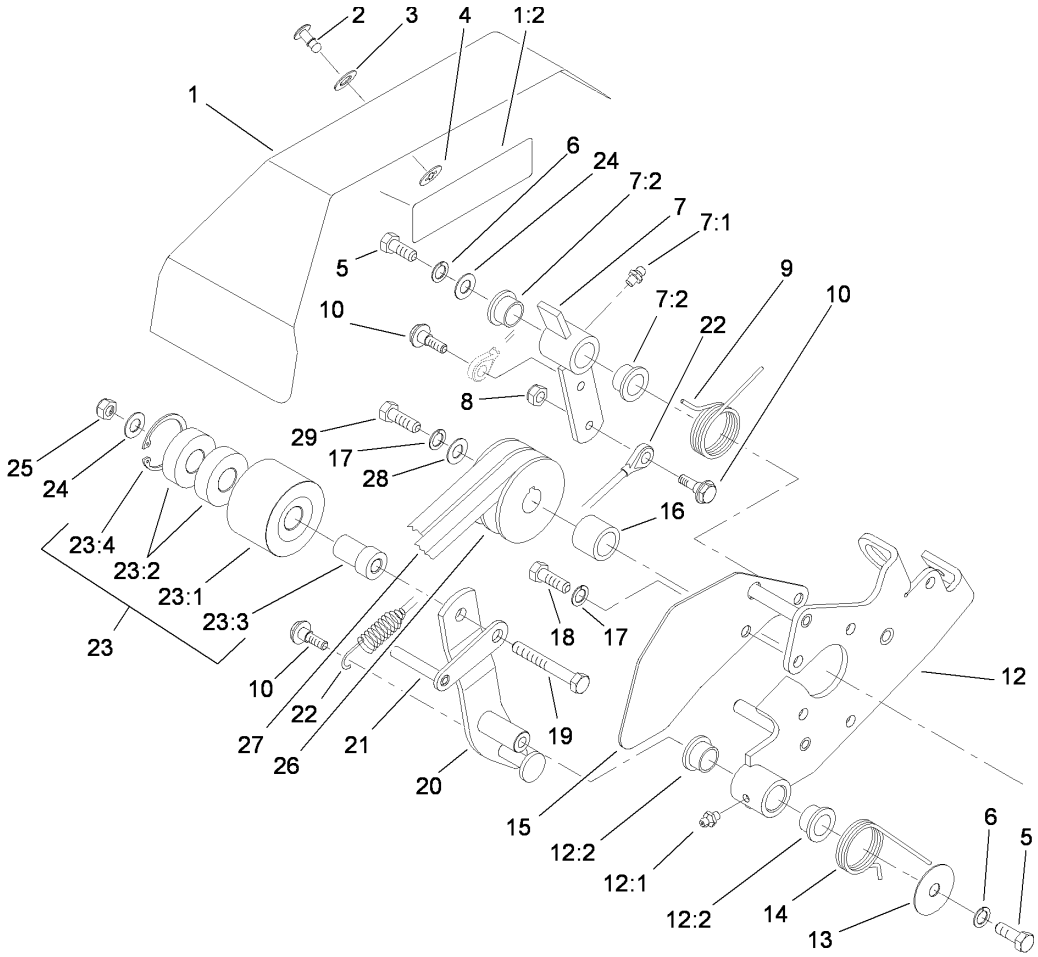

Bellcrank Assembly

Ref	Part No.	Qty.	Description
1	94-9007	1	Bellcrank Cover ASM
1:2	84-7280	1	Decal-Danger, Japan
1:2	93-7273	1	Decal-Danger
2	93-6074	1	Stud
3	3256-70	1	Washer-Flat
4	93-6073	1	Washer-Nylon
5	323-4	2	Screw-HH
6	3253-21	2	Washer-Lock
7	93-6014	1	Lever ASM
7:1	302-5	1	Fitting-Grease
7:2	65-8770	2	Bushing-Bellcrank
8	3296-42	3	Nut-Lock, NI
9	93-6011	1	Spring-Torsion
10	11-9030	3	Screw-Shoulder
12	93-6015	1	Clutch Bracket ASM
12:1	302-5	1	Fitting-Grease
12:2	65-8770	2	Bushing-Bellcrank
13	93-6099	1	Washer
14	93-6012	1	Spring-Torque, Clutch Lever
15	93-6013-03	1	Shield-Belt
16	65-8260	1	Spacer-Shaft, Engine
17	3253-4	6	Washer-Lock
18	33114-016	5	Screw-HH
19	323-11	1	Screw-HH

Ref	Part No.	Qty.	Description
20	93-6003-03	1	Lever-Clutch
21	95-0922	1	Guide-Belt
22	93-9024	1	Cable Link ASM
23	98-7296	1	Idler Pulley ASM
23:1	98-7297	1	Pulley-Idler
23:2	38-7820	2	Bearing-Ball
23:3	88-7350	1	Bushing-Pulley
23:4	32120-42	1	Ring-Retaining
24	3256-56	5	Washer-Flat
25	3296-39	1	Nut-Lock, NI
26	92-9216	1	Pulley-Drive, Input
27	92-9218	1	V-Belt (Matched Set)
28	65-8270	1	Washer
29	33114-025	1	Screw-HH

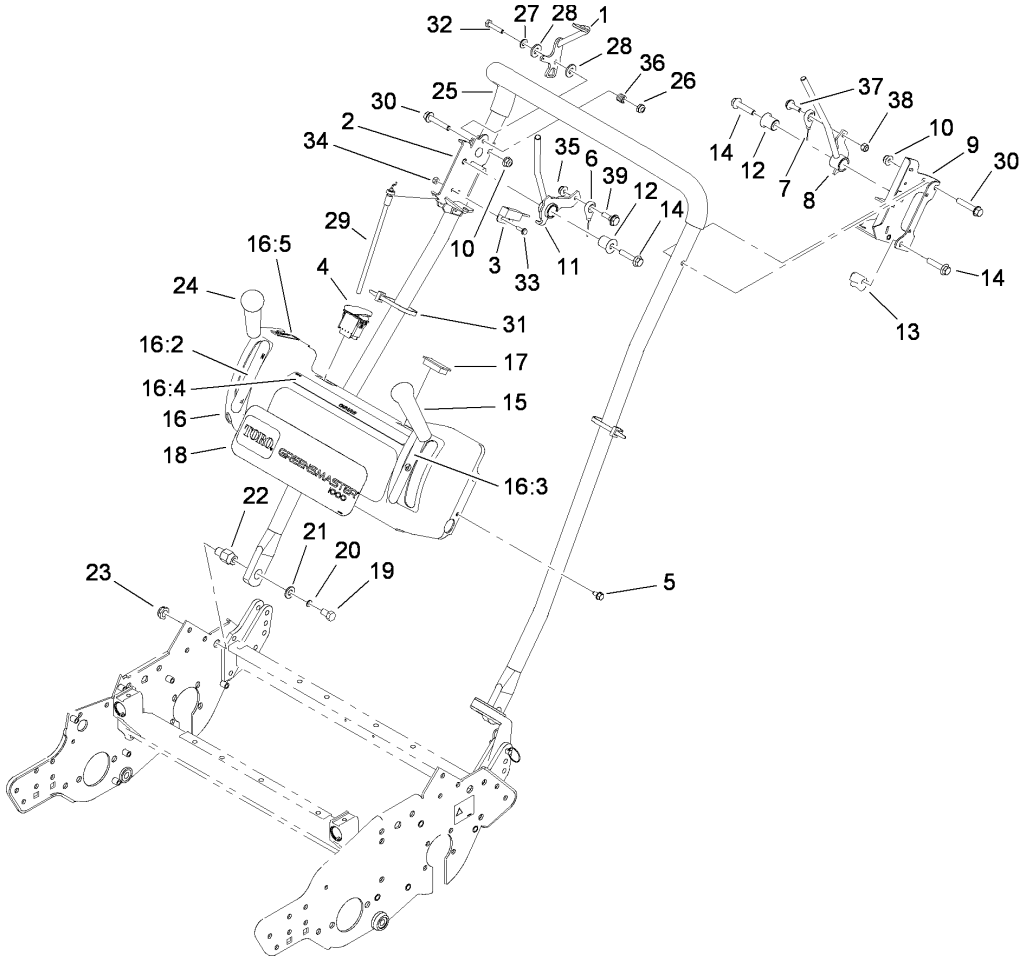

Handle Assembly

Ref	Part No.	Qty.	Description
1	115-1098	1	Throttle Lever ASM
2	115-1069-03	1	Control Bracket ASM
3	100-1270	1	Switch-Proximity
4	112-9420	1	Switch-Engine
5	104-2628	4	Screw-HWH
6	94-5870	1	Cable Clutch ASM
7	94-5871	1	Cable Brake ASM
8	115-1677	1	Brake Lever ASM
9	115-1068-03	1	Brake Bracket ASM
10	104-8300	2	Nut-Flange, NI
11	115-1755	1	Lever-Traction
12	112-9317	2	Bushing-Flanged
13	110-2415	2	Clamp-Handle
14	112-9318	4	Screw-HHF W/Lock
15	104-9774	1	Knob-Red
16	115-1120	1	Console ASM
16:2	104-2617	1	Decal-Lever, Traction
16:3	104-2618	1	Decal-Lever, Brake
16:4	115-1614	1	Decal-Warning
16:5	93-6085	1	Decal-Throttle
17	99-7420	1	Plug-Hole
18	115-1130	1	Decal-Console
19	323-34	2	Screw-HH
20	3253-21	2	Washer-Lock

Ref	Part No.	Qty.	Description
21	3256-24	2	Washer-Flat
22	110-7364	2	Pin-Handle, Pivot
23	3296-28	2	Nut-Lock, NI
24	104-9760	1	Knob-Black
25	112-9478	1	Handle
26	3296-56	1	Nut-Lock, NI
27	3256-22	1	Washer-Flat
28	66-2921	2	Washer-Friction
29	94-5869	1	Throttle Cable ASM
30	94-5780	2	Screw-HWH
31	3290-378	2	Tie-Cable
32	321-8	1	Screw-HH
33	32105-23	2	Screw
34	3296-2	2	Nut-Lock, NI
35	104-7201	1	Nut-HF
36	3-5787	1	Spring-Compression
37	11-9030	1	Screw-Shoulder
38	3296-42	1	Nut-Lock, NI
39	11-9030	1	Screw-Shoulder

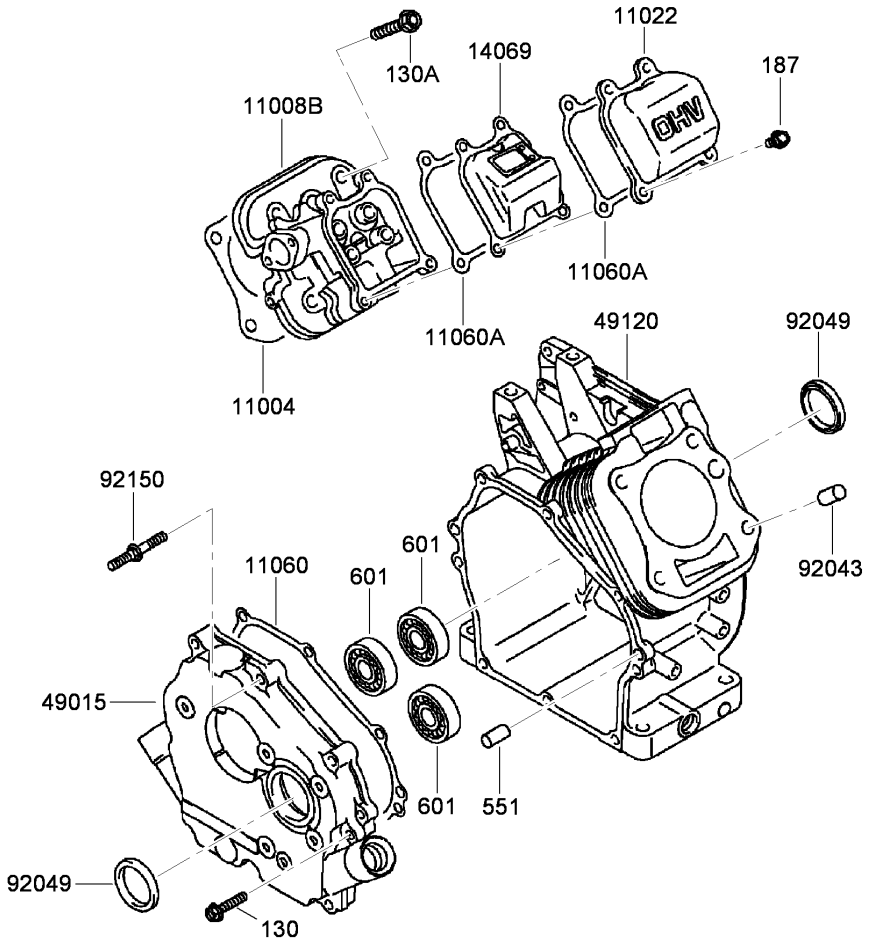

Cylinder and Crankcase Assembly

Ref	Part No.	Qty.	Description
130	108-2522	4	Bolt-Flanged (6X30)
130A	115-1759	4	Bolt-Flanged (8X45)
187	115-1760	4	Bolt-Upset, Wsp (6X16)
551	93-8516	2	Pin-Dowel (6X12)
601	93-8517	3	Bearing-Ball
11004	93-8504	1	Gasket-Head
11008B	115-1757	1	Head-Cylinder
11022	93-8508	1	Case-Rocker
11060	93-8525	1	Gasket-Cover, Crankcase
11060A	93-8509	2	Gasket-Case, Rocker
14069	93-8510	1	Breather
49015	93-8520	1	Cover-Crankcase
49120	93-8515	1	Crankcase
92043	93-8512	2	Pin
92049	93-8511	2	Seal-Oil
92150	93-8524	1	Stud

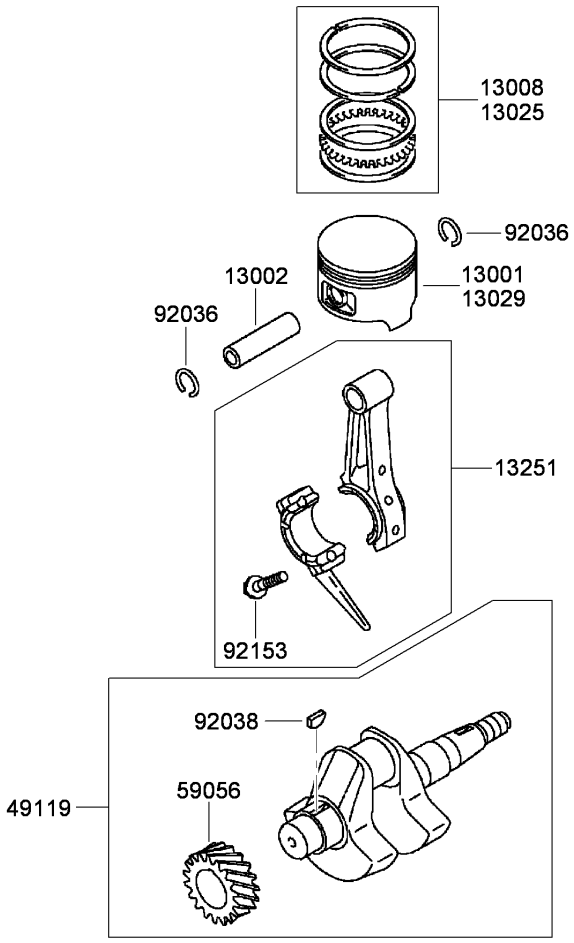

Piston and Crankshaft Assembly

Ref	Part No.	Qty.	Description
13001	93-8502	1	Piston
13002	93-8501	1	Pin-Piston
13008	93-8503	1	Set-Ring, Piston
13025	94-6837	1	Piston Ring Set (.05Mm)
13029	94-6836	1	Piston (0.5 O S)
13251	93-8528	1	Connecting Rod ASM
49119	93-8518	1	Crankshaft ASM
59056	94-9043	1	Gear-Helical
92036	93-8500	2	Ring-Retaining
92038	93-8698	1	Key
92153	115-1805	2	Bolt (6X30)

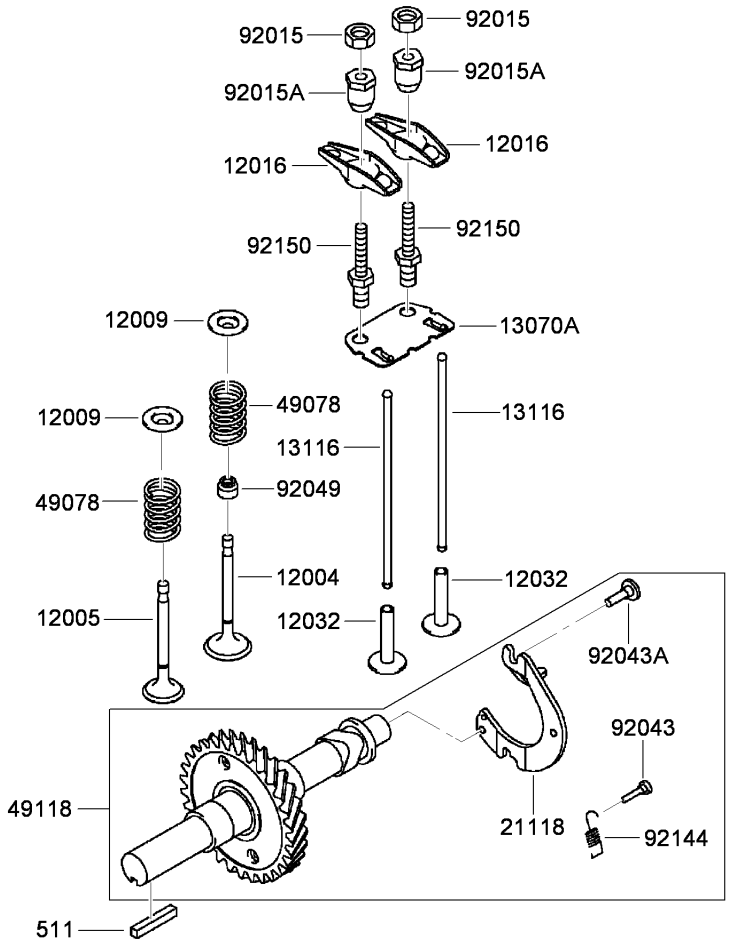

Valve and Camshaft Assembly

Ref	Part No.	Qty.	Description
511	108-9442	1	Key
12004	93-8532	1	Valve-Intake
12005	93-8529	1	Valve-Exhaust
12009	93-8531	2	Retainer-Spring, Valve
12016	93-8535	2	Arm-Rocker
12032	93-8539	2	Tappet
13070A	115-1758	1	Guide
13116	93-8538	2	Rod-Push
21118	93-8543	1	Decompressor
49078	115-1763	2	Spring-Valve, Engine
49118	93-8544	1	Camshaft ASM
92015	93-8533	2	Nut
92015A	93-8534	2	Nut
92043	93-8542	1	Pin
92043A	93-8540	2	Pin
92049	115-1762	1	Seal-Oil
92144	93-8541	1	Spring
92150	93-8536	2	Bolt

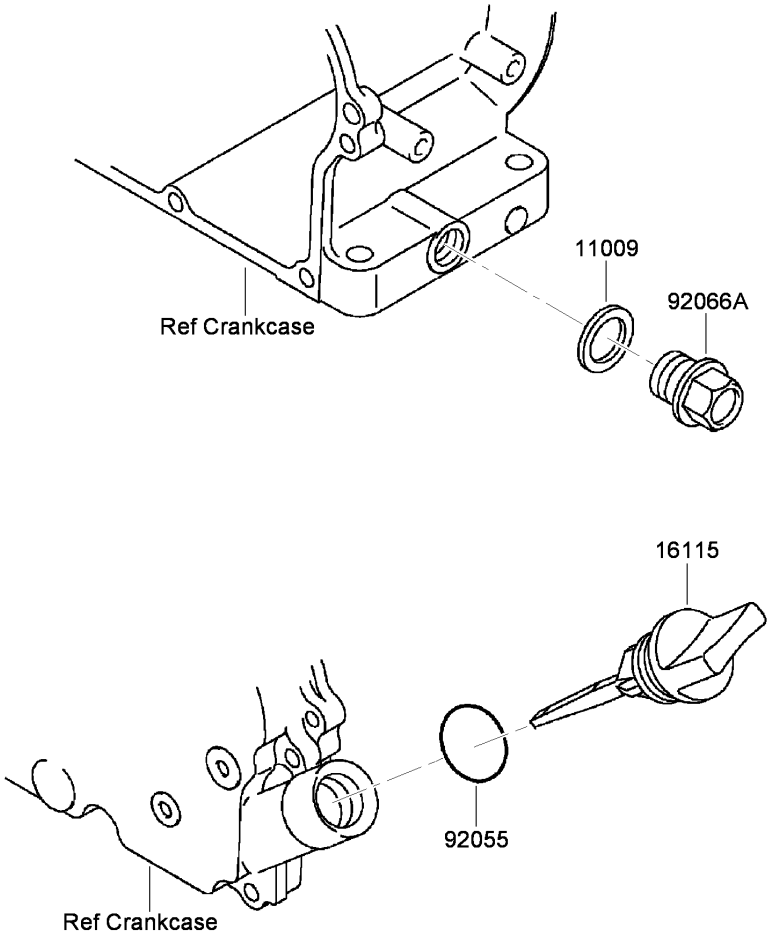

Lubrication Equipment Assembly

Ref	Part No.	Qty.	Description
11009	93-8514	2	Gasket-Plug, Drain (14.2X19X2)
16115	93-8523	2	Cap-Filler, Oil
92055	94-9041	2	O-Ring (20Mm)
92066A	115-1761	2	Plug (14X12)

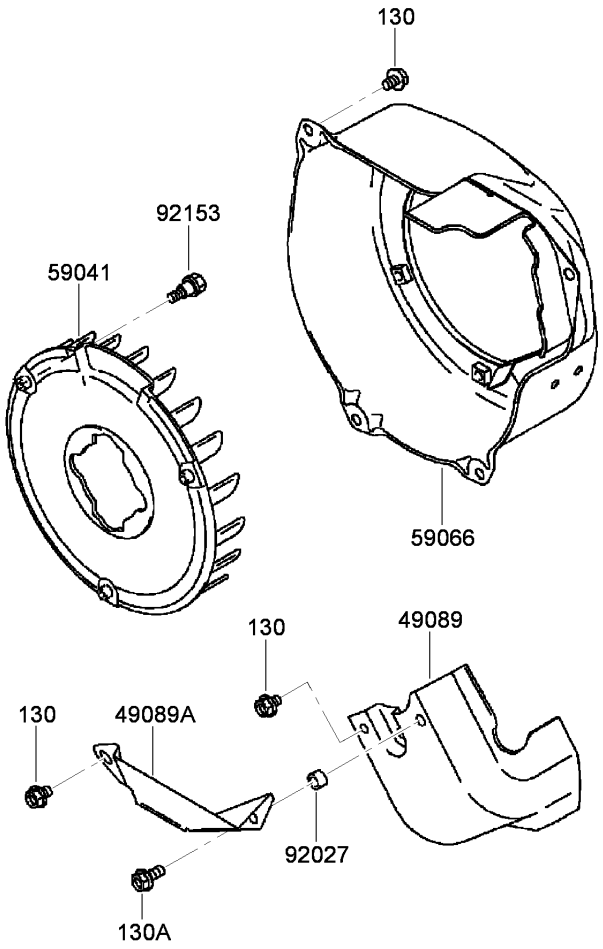

Cooling Equipment Assembly

Ref	Part No.	Qty.	Description
130	115-1765	7	Bolt-Flanged (6X8)
130A	115-1764	1	Bolt-Flanged (6X14)
49089	93-8563	1	Shroud-Engine
49089A	93-8565	1	Shroud-Engine
59041	93-8572	1	Fan
59066	115-1804	1	Housing-Fan
92027	93-8564	1	Collar (6.8X10X6)
92153	115-1766	3	Bolt

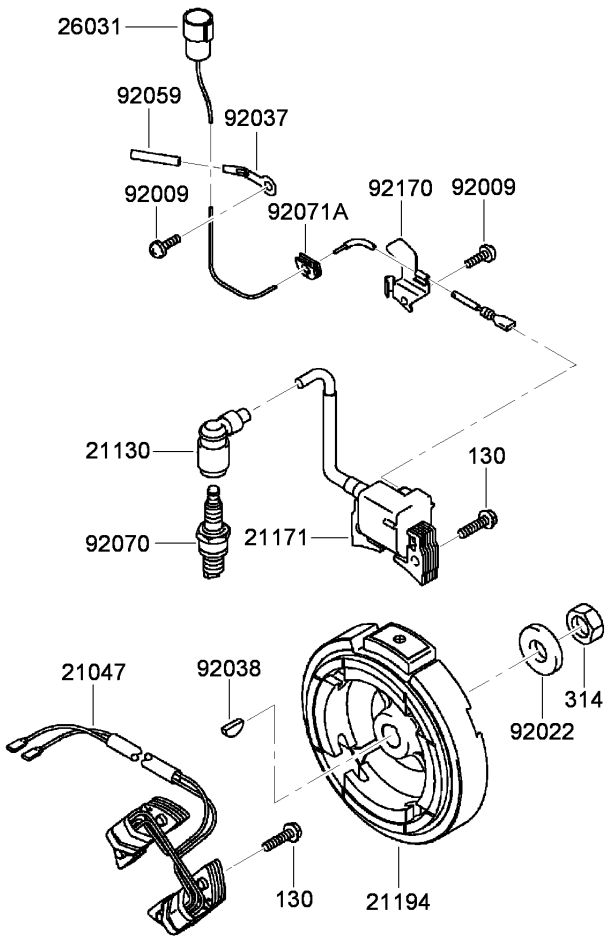

Electric Equipment Assembly

Ref	Part No.	Qty.	Description
130	100-2610	6	Bolt-Flanged (6X25)
314	93-8568	1	Nut-Hex, Fine (14Mm)
21047	99-4267	1	Coil-Lighting
21130	KW10087	1	Cap-Sparkplug
21171	94-9031	1	Ignition Coil ASM
21194	99-6237	1	Flywheel ASM
26031	115-1767	1	Harness
92009	95-9716	2	Screw
92022	93-8569	1	Washer
92037	115-1771	1	Clamp
92038	93-8571	1	Key
92059	115-1768	1	Tube (5X6X75)
92070	108-2557	1	Sparkplug (Bpr5Es) (Ngk) Solid
92071A	115-1772	1	Grommet
92170	93-8583	1	Clamp

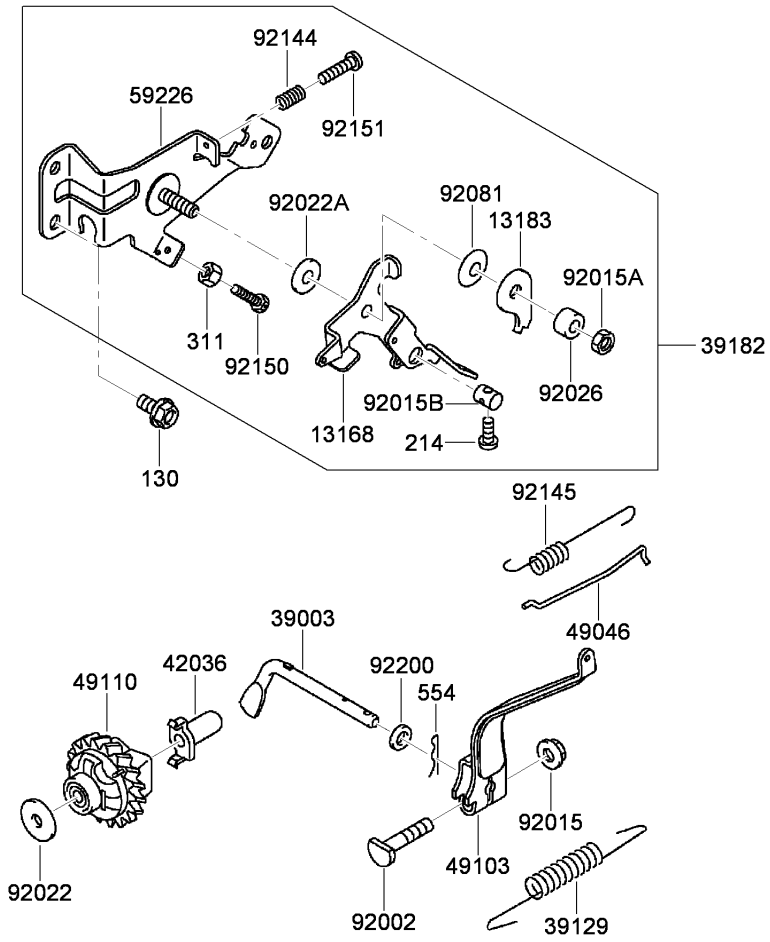

Control Equipment Assembly

Ref	Part No.	Qty.	Description
130	115-1809	2	Bolt-Flanged (6X12)
214	115-1778	1	Screw-Pan (4X14)
311	100-2668	1	Nut-Hex (4Mm)
554	93-8607	1	Pin-Snap (1.2X21.2)
13168	93-8598	1	Lever
13183	93-8592	1	Plate
39003	93-8609	1	Arm-Pivot
39129	94-9030	1	Spring-Governor
39182	115-1754	1	Control Panel ASM
42036	108-2567	1	Sleeve
49046	115-1811	1	Rod-Governor
49103	93-8603	1	Arm-Governor
49110	115-1812	1	Governor ASM
59226	115-1773	1	Panel-Control
92002	93-8606	1	Bolt (6X28)
92015	93-8631	1	Nut
92015A	93-8595	1	Nut
92015B	93-8597	1	Nut
92022	94-6842	1	Washer (6.2X20X0.5)
92022A	93-8590	1	Washer
92026	115-1776	1	Spacer
92081	115-1775	1	Spring
92144	93-8588	1	Spring
92145	115-1810	1	Spring

Ref	Part No.	Qty.	Description
92150	115-1813	1	Bolt
92151	115-1774	1	Bolt (4X22)
92200	93-8608	1	Washer (6.5X11.5X2.0)

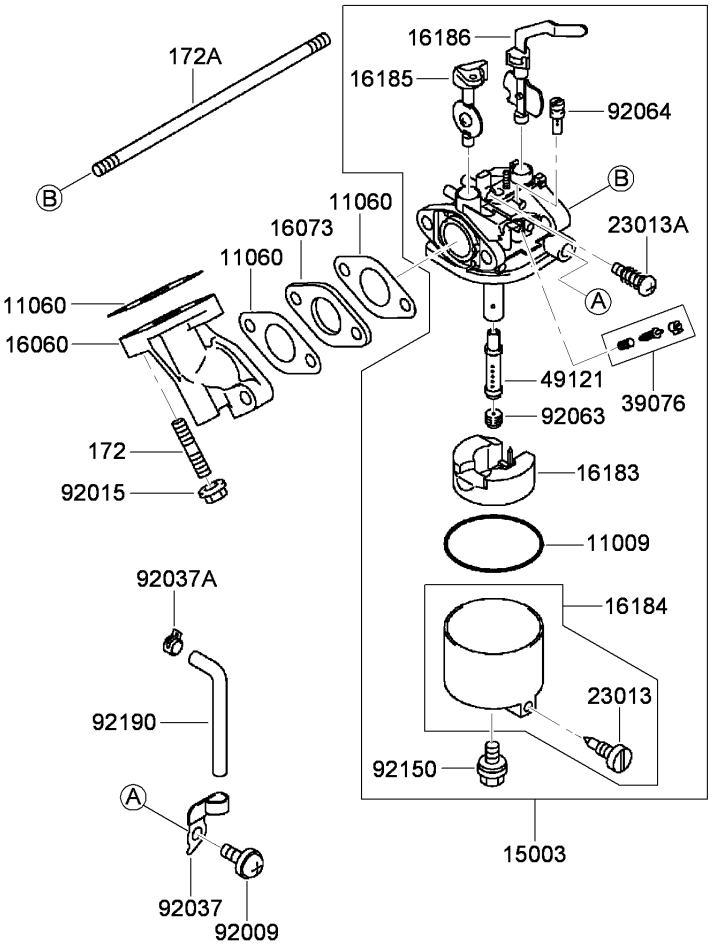

Carburetor Assembly

Ref	Part No.	Qty.	Description
172	93-8632	2	Bolt-Stud (6X18)
172A	115-1814	1	Bolt-Stud (6X73)
11009	93-8624	1	Gasket
11060	93-8613	3	Gasket
15003	94-9032	1	Carburetor ASM
16060	93-8633	1	Pipe-Intake
16073	94-9048	1	Insulator
16183	94-6844	1	Float ASM
16184	93-8625	1	Float Chamber ASM
16185	94-9033	1	Throttle Valve ASM
16186	93-8617	1	Choke Valve ASM
23013	93-8626	1	Screw ASM
23013A	93-8619	1	Screw ASM
39076	94-9034	1	Limiter
49121	94-9035	1	Nozzle-Main
92009	94-6845	1	Screw
92015	93-8631	2	Nut
92037	94-6846	1	Clamp
92037A	93-8629	1	Clamp
92063	94-9036	1	Jet-Main (No.65)
92064	94-9037	1	Jet-Pilot (No.40)
92150	93-8627	1	Bolt
92190	93-8630	1	Tube

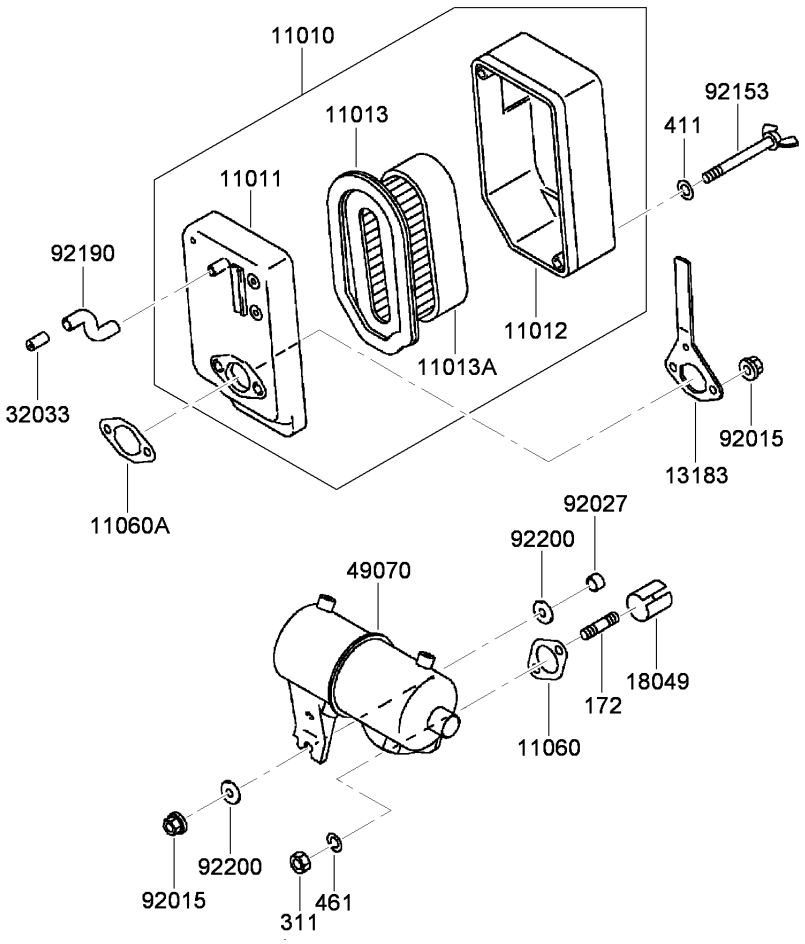

Air Filter and Muffler Assembly

Ref	Part No.	Qty.	Description
172	115-1819	2	Bolt-Stud (6X16)
311	93-8656	2	Nut-Hex (6Mm)
411	115-1816	2	Washer-Plain (5Mm)
461	93-8655	2	Washer-Spring (6Mm)
11010	93-8634	1	Air Filter ASM
11011	93-8635	1	Case Filter ASM
11012	93-8638	1	Cap-Filter, Air
11013	93-8636	1	Element-Filter, Air
11013A	93-8637	1	Element-Filter, Air
11060	93-8654	1	Gasket-Muffler
11060A	93-8657	1	Gasket-Filter, Air
13183	93-8642	1	Plate-Filter, Air
18049	93-8652	1	Pipe-Exhaust
32033	93-8658	1	Pipe
49070	115-1817	1	Muffler
92015	93-8631	3	Nut
92027	93-8651	1	Collar
92153	93-8640	2	Bolt
92190	93-8659	1	Tube
92200	93-8650	2	Washer (.5X18X2.0)

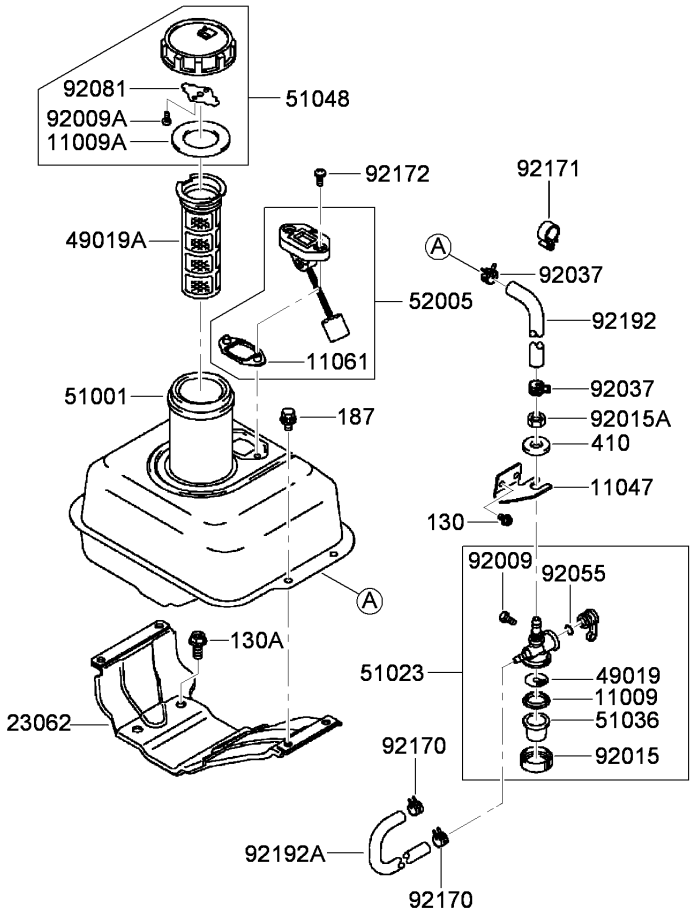

Fuel Tank and Valve Assembly

Ref	Part No.	Qty.	Description
130	115-1864	2	Bolt-Flanged (5X8)
130A	115-1867	4	Bolt-Flanged (8X18)
187	115-1760	4	Bolt-Upset, Wsp (6X16)
410	93-8668	1	Washer-Plain (10Mm)
11009	93-8673	1	Gasket
11009A	93-8662	1	Gasket
11047	93-8681	1	Bracket
11061	104-2384	1	Gasket-Gauge, Fuel
23062	104-2383	1	Bracket-Tank
49019	94-6849	1	Filter-Tapper, Fuel
49019A	94-6826	1	Filter-Fuel
51001	104-2382	1	Tank-Fuel
51023	93-8669	1	Fuel Tapper ASM
51036	93-8674	1	Cup-Tapper, Fuel
51048	93-8660	1	Fuel Cap ASM
52005	93-8685	1	Gauge-Fuel
92009	93-8670	1	Screw
92009A	93-8661	2	Screw
92015	93-8675	1	Nut
92015A	94-9042	1	Nut
92037	115-1861	2	Clamp-Clip, Hose
92055	93-8671	1	O-Ring
92081	93-8663	1	Spring
92170	115-1865	2	Clamp

Ref	Part No.	Qty.	Description
92171	115-1862	1	Clamp
92172	115-1860	2	Screw (5X12)
92192	115-1863	1	Tube (6.2X13.2X200)
92192A	115-1866	1	Tube (4X11X160)

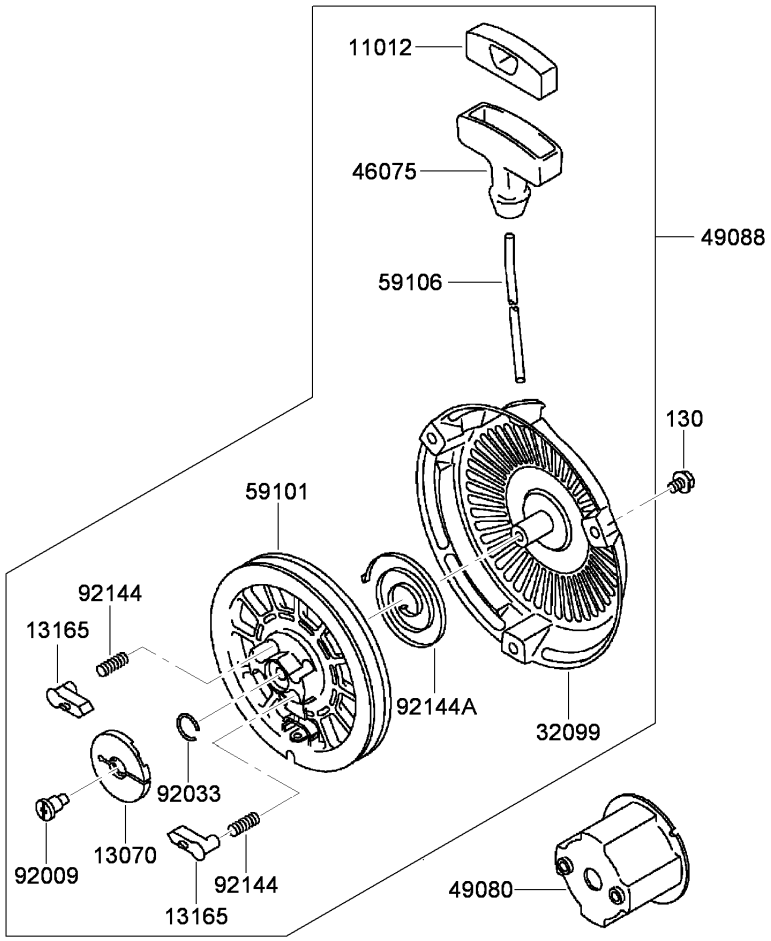

Starter Assembly

Ref	Part No.	Qty.	Description
130	115-1765	3	Bolt-Flanged (6X8)
11012	94-9044	1	Cap-Grip
13070	93-8562	1	Guide-Pawl
13165	93-8554	2	Pawl-Starter, Recoil
32099	94-9046	1	Case-Starter, Recoil
46075	94-9045	1	Grip-Starter, Recoil
49080	93-8567	1	Pulley-Recoil
49088	93-8552	1	Recoil Starter ASM
59101	93-8556	1	Reel-Starter, Recoil
59106	93-8560	1	Rope (4X1500)
92009	93-8553	1	Screw
92033	93-8561	1	Ring-Retaining
92144	93-8555	2	Spring-Return
92144A	93-8557	1	Spring

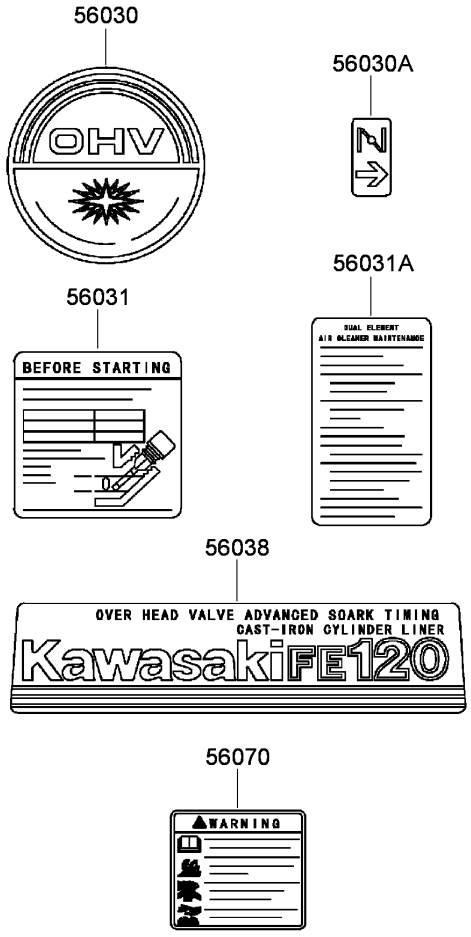

Label Set

Ref	Part No.	Qty.	Description
56030	94-9027	1	Label-Recoil
56030A	93-8687	1	Decal-Choke
56031	93-8689	1	Decal-Instructions
56031A	93-8690	1	Decal-Maintenance
56038	94-9028	1	Label-Kawasaki
56070	93-8692	1	Decal-Warning

Attachments and Accessories

For 04052 - Greensmaster 1000 Mower

Product Name	Model/Part
Light Kit	04057
Dethatcher Kit	04109
Dethatcher Kit	04111
Out Front Brush Kit	04119
Wheel Kit	04123
Groomer Reel Kit	04126
Full Roller ASM (21 Inch)	104-2642
Hour Meter Kit	105-5350
Operator Presence Kit	105-5363
Brush-Groomer	105-9640
Bedbar-Aggressive	112-9279-03
Smooth Scraper Kit	112-9285
Scraper Brush Kit	112-9286
Comb Scraper Kit	112-9287
Wide Wiehle Scraper Kit	112-9288
Narrow Wiehle Scraper Kit	112-9289
Swaged Roller ASM	52-3590
Auxiliary Roller Kit	65-8560
25 Inch Clip Kit	65-9000
Wiehle Roller ASM (Cast Iron)	71-1550
Wiehle Roller ASM (.43 Inch Spacing)	88-6790
Bedknife-Microcut	93-4262
Bedknife-Low Cut	93-4264
8 Blade Reel ASM	93-6087
Wiehle Roller ASM (2.5 Inch Diameter)	93-9045
Decal Kit	94-5895
Height-of-Cut Bar ASM	94-9010
Jet-Main, #62 High Altitude	98-8735
Jet-Main, #60 High Altitude	98-8736

NOTES

NOTES


TORO®