FORM NO. 3317–116

TORO®

MODEL NO. 70080–5900001 & UP
MODEL NO. 70120–5900001 & UP

PARTS CATALOG

WHEEL HORSE®
10–32 & 12–32 RIDING MOWER

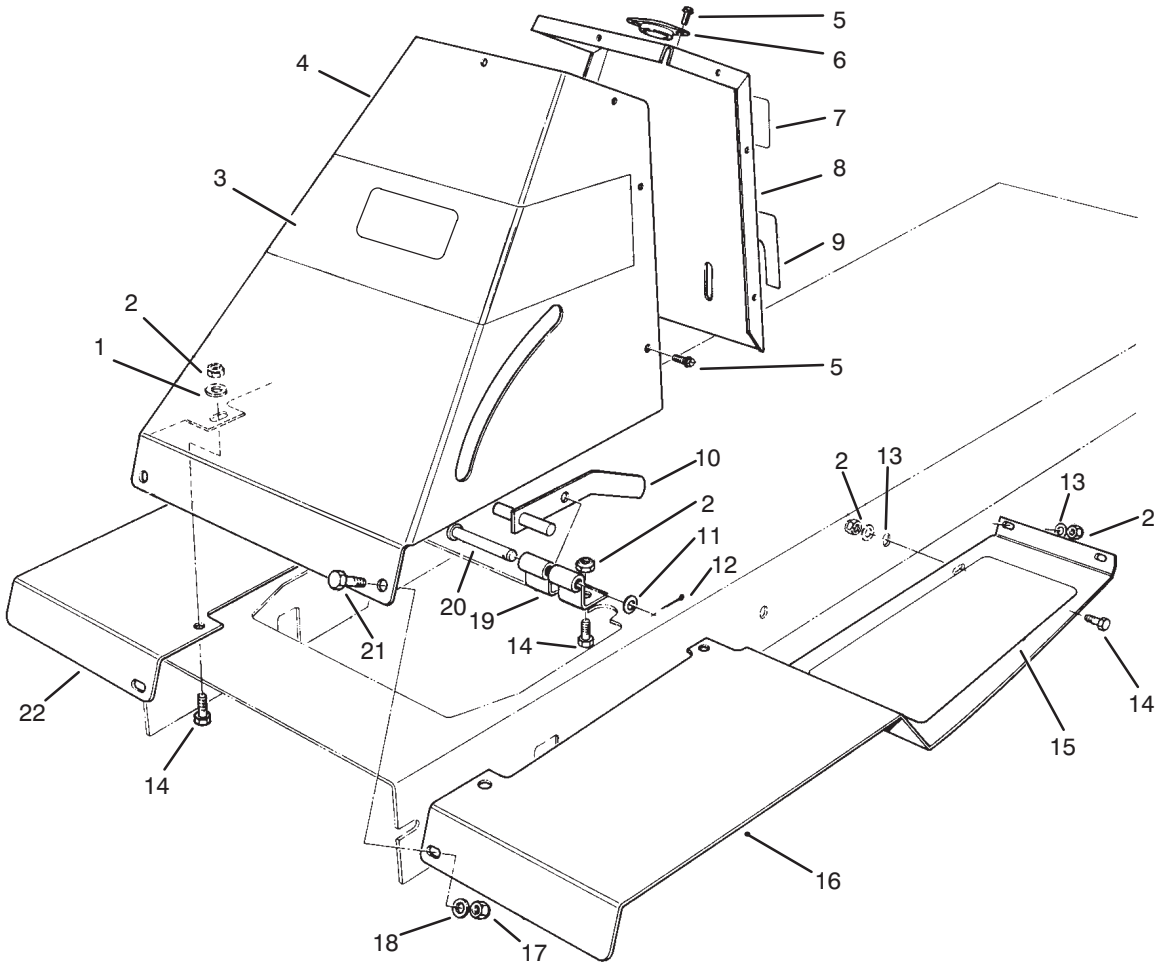

C–1933

FRONT TOWER ASSEMBLY

Ref. No.	Part No.	Description	No. Used
1	3256–35	Washer – Flat	4
2	3296–29	Nut – Lock	14
3	92–7987	Decal – Recycler	1
4	56–7130	Tower – Front	1
5	32104–76	Screw – Self Tap Acorn Hd.	9
6	56–7170	Guide – Shaft, Steering	1
7	79–0370	Decal – Danger	1
8	56–7140	Tower – Rear	1
9	56–7810	Decal – Brake, Parking	1
10	47–1290	Brake – Parking	1
11	3256–24	Washer – Flat	1
12	3272–6	Pin – Cotter	1
13	3256–23	Washer – Flat	8

Ref. No.	Part No.	Description	No. Used
14	322–5	Screw – Cap Hex. Hd.	10
15	92–7975	Tread – Foot L.H.	1
*	92–7974	Tread – Foot R.H.	1
16	47–0940	Footrest – L.H.	1
17	3296–42	Nut – Lock	2
18	3256–22	Washer – Flat	2
19	47–2060	Bracket – Brake, Parking	1
20	283–52	Pin – Clevis	1
21	321–4	Screw – Cap Hex. Hd.	2
22	47–0930	Footrest – R.H.	1
*	12–8829	Loose Parts	1
*	12–8819	Loose Parts (Includes Steering Wheel)	1

*Not Illustrated

© The TORO Company –1994
All Rights Reserved

TPS

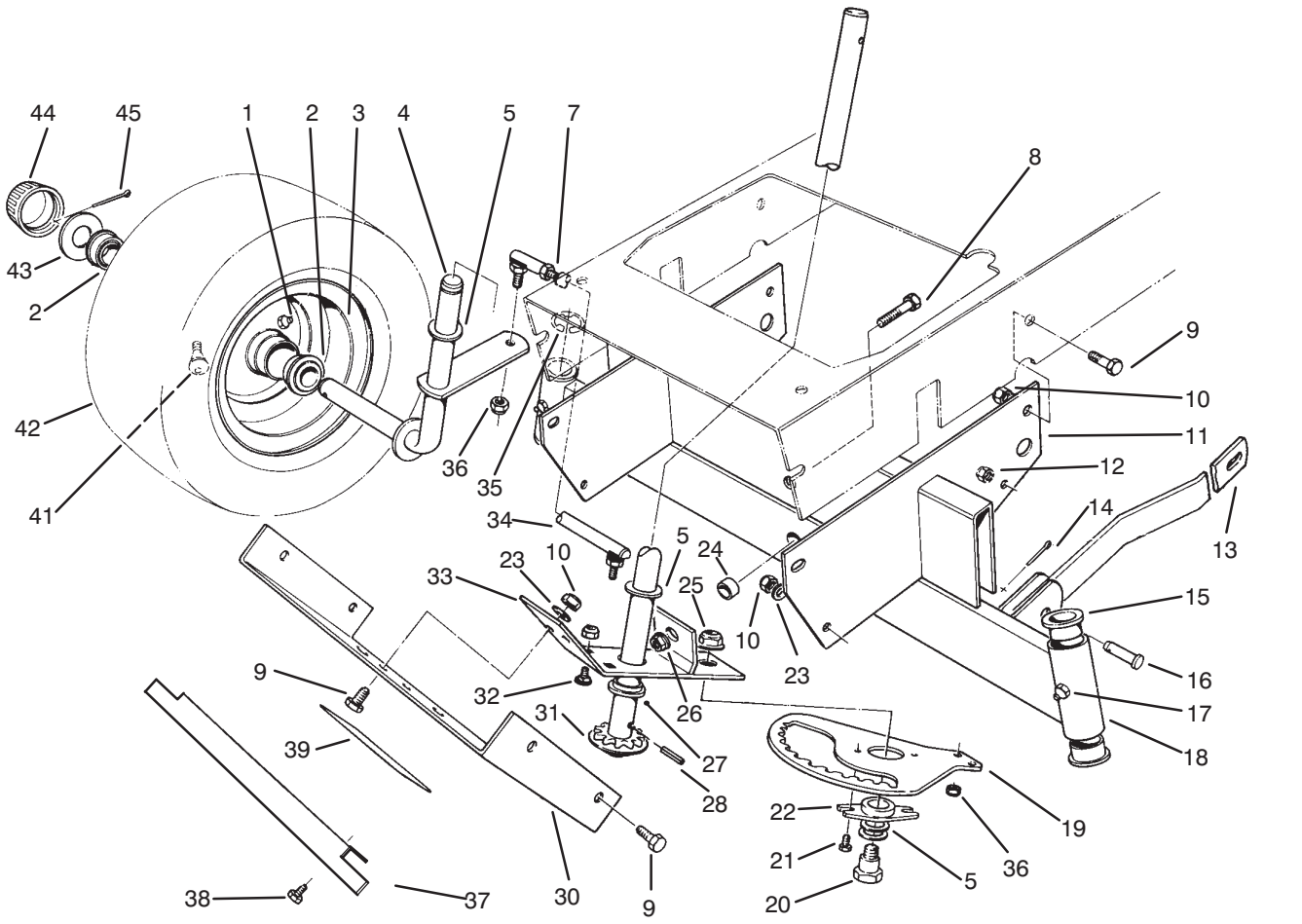

FRONT AXLE ASSEMBLY

Ref. No.	Part No.	Description	No. Used
1	302–5	Fitting – Grease	2
2	110513	Bearing	4
3	217–80	Rim	2
4	47–0600	Spindle – R.H.	1
*	47–0590	Spindle – L.H.	1
5	3–6498	Washer – Thrust	5
7	3220–2	Nut – Hex. Jam	1
8	325–6	Screw – Cap Hex. Hd.	1
9	322–5	Screw – Cap Hex. Hd.	8
10	3296–29	Nut – Lock	8
11	47–0760	Support – Axle, Front	1
12	3296–8	Nut – Lock	1
13	47–0010	Arm – Suspension, Front	2
14	3272–6	Pin – Cotter	2
15	27–9080	Bearing – Flange	4
16	283–2	Pin – Clevis	2
17	302–49	Fitting – Grease	2
18	80–2430	Axle – Front (Incl. Ref. #15 & 17)	1
19	80–2450	Rack – Steering	1
20	56–7530	Bolt – Shoulder	1
21	32144–4	Screw – Special	2
22	56–7520	Bushing – Sector	1
23	3256–23	Washer – Flat	6

Ref. No.	Part No.	Description	No. Used
24	28–0380	Spacer – Axle, Front	1
25	32128–21	Nut – Lock, Flange Hd.	1
26	32128–23	Nut – Lock, Flange Hd.	1
27	47–0700	Bearing – Flange	1
28	32121–9	Pin – Roll	1
30	56–7180	Cover – Front	1
31	56–7500	Shaft – Steering	1
32	3230–18	Bolt – Carriage	2
33	56–7470	Bracket – Rack, Steering (Incl. Ref. #27)	1
34	47–0610	Tie Rod – Adjustable (Incl. Ref. #7)	1
*	80–2460	Tie Rod – Fixed	1
35	32151–48	Ring – Retaining, External	2
36	3296–4	Nut – Lock	4
37	92–0876	Guard – Front	1
38	32144–14	Screw – Thread Forming	2
39	92–7989	Decal – Important	1
41	237–27	Valve Stem w/Cap	2
42	231–116	Tire	2
43	28–2480	Washer	2
44	61–9780	Cap – Hub	2
45	3272–12	Pin – Cotter	2
†	232–44	Tube – Inner	2

*Not Illustrated
†Service Replacement Part

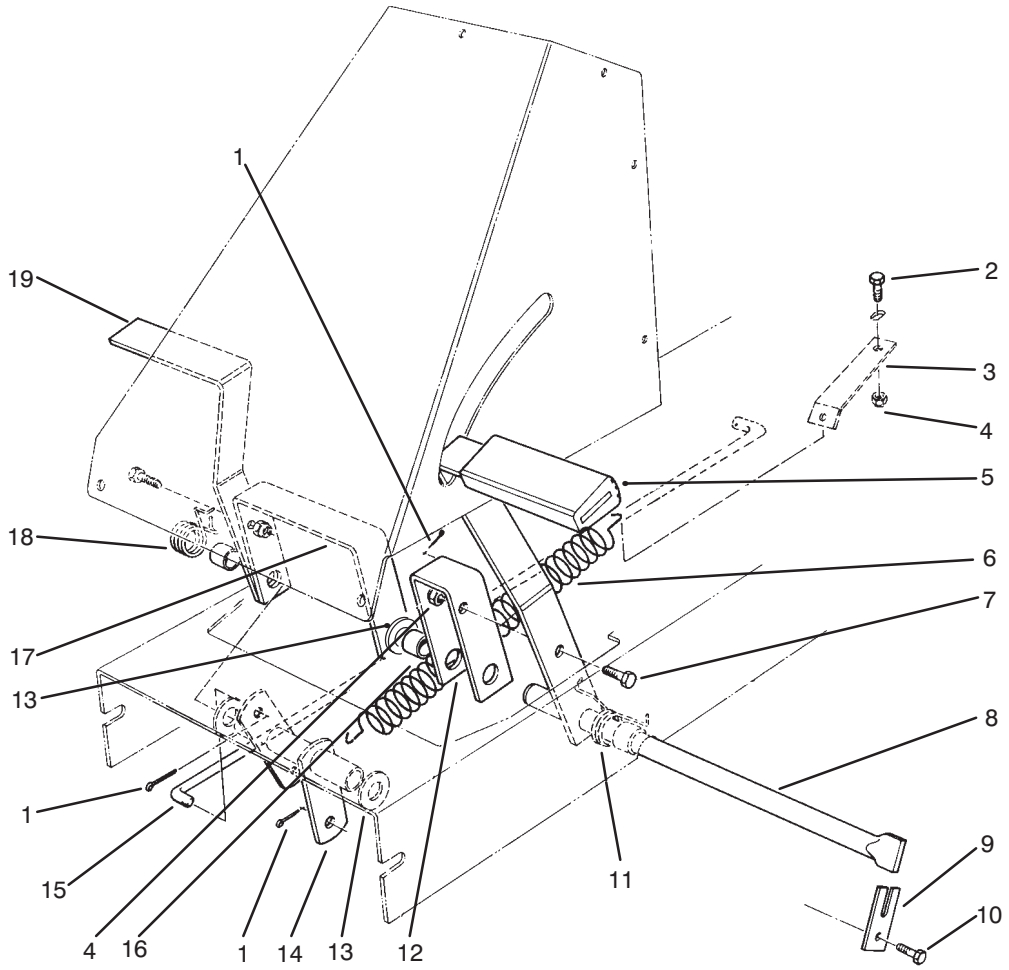

C–0439A

BRAKE & CLUTCH ASSEMBLY

Ref. No.	Part No.	Description	No. Used
1	3272–6	Pin – Cotter	3
2	322–5	Screw – Cap Hex. Hd.	1
3	56–7240	Bracket – Retaining, Spring	1
4	3296–29	Nut – Lock	3
5	65–2920	Pad – Pedal, Foot	2
6	62–3930	Spring – Extension	1
7	322–5	Screw – Cap Hex. Hd.	2
8	47–0770	Shaft – Pivot, Pedal	1
9	47–0780	Retainer – Shaft	1
10	321–4	Screw – Cap Hex. Hd.	1

Ref. No.	Part No.	Description	No. Used
11	56–7070	Spring – Torsion, Clutch	1
12	47–0560	Bracket – Clutch, Pedal	1
13	3256–27	Washer – Flat	3
14	56–7650	Tube – Pivot	1
15	56–7570	Rod – Engagement	1
16	47–0570	Spacer – Pedal	3
17	47–0550	Bracket – Brake, Pedal	1
18	56–7080	Spring – Torsion, Brake	1
19	47–0540	Pedal	2

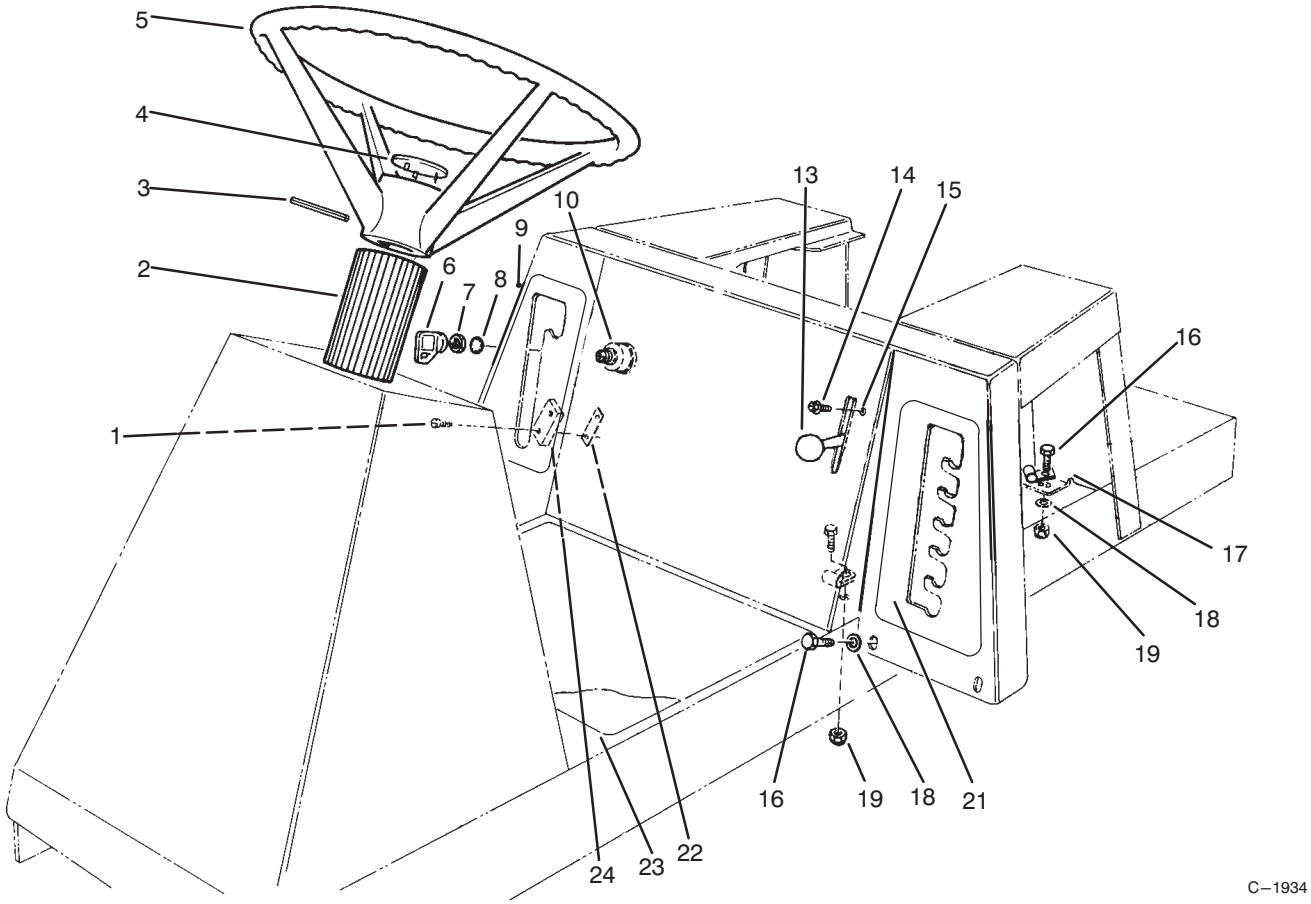

STEERING WHEEL, SWITCHES & DECALS

Ref. No.	Part No.	Description	No. Used
1	147665	Screw – Phillips Head	2
2	66–6740	Cover – Shaft, Steering	1
3	32121–78	Pin – Roll	1
4	92–7990	Insert – Wheel, Steering	1
5	49–3242	Assy. – Wheel, Steering (Incl. Ref. #4)	1
6	63–8360	Key	1
7	218–461	Nut – Lock	1
8	3254–5	Washer – Lock, Int. Tooth	1
9	92–7244	Decal – Deck Engage	1
10	23–0660	Switch – Ignition (Incl. Ref. #6–8)	1

Ref. No.	Part No.	Description	No. Used
13	233–25	Knob	1
14	32104–76	Screw – Self–Tapping	2
15	92–0890	Control – Throttle (Incl. Ref. #13)	1
16	322–5	Screw – Cap Hex. Hd.	8
17	2412–68	Clamp	2
18	3256–23	Washer – Flat	7
19	3296–29	Nut – Lock	4
21	92–7245	Decal – H.O.C.	1
22	3290–354	Nut – Double	1
23	76–1090	Decal – Instructions	1
24	88–9931	Switch – Micro	1

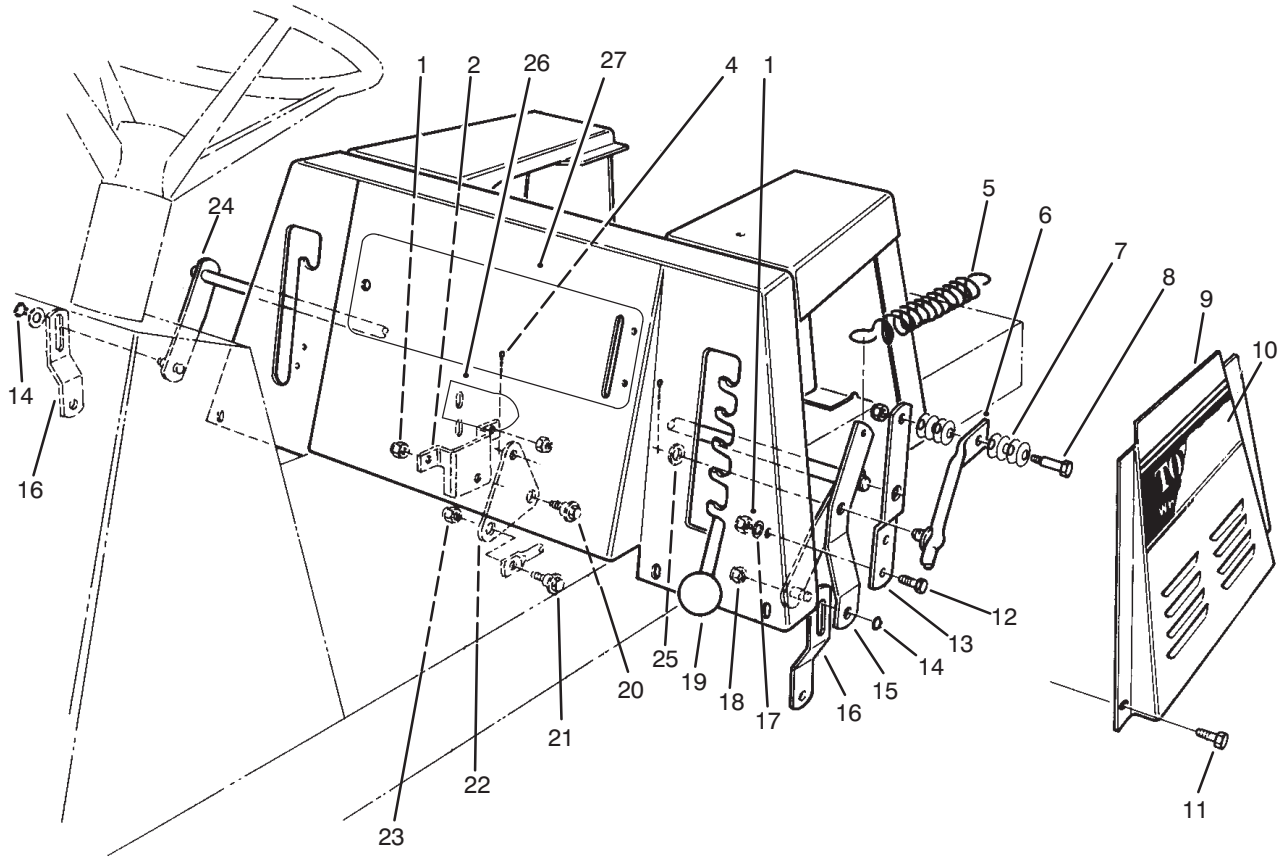

C–1935

LINKAGE ASSEMBLY

Ref. No.	Part No.	Description	No. Used
1	3296–29	Nut – Lock	7
2	80–2310	Bracket – Bell Crank Mount	1
4	3272–6	Pin – Cotter	2
5	62–3930	Spring – Extension	1
6	47–1850	Lever – Height–of–Cut	1
7	3290–413	Washer – Belleville	8
8	28–0540	Bolt – Shoulder	1
9	92–0878	Panel L.H. – Base, Seat	1
10	92–7986	Decal – L.H. (Model 70120)	1
10	92–7985	Decal – L.H. (Model 70080)	1
11	321–4	Screw – Cap Hex. Hd.	4
12	322–5	Screw – Cap Hex. Hd.	2
13	47–1840	Bracket – Height–of–Cut	1
14	32151–61	Ring – Retaining	2

Ref. No.	Part No.	Description	No. Used
15	80–2320	Bracket – H.O.C., Engage	1
16	63–5830	Link – Suspension, Deck	2
17	3256–23	Washer – Flat	4
18	3296–42	Nut – Lock	1
19	233–48	Knob	1
20	19–1470	Bolt – Shoulder	1
21	65–5670	Bolt – Shoulder	1
22	80–2360	Crank – Bell, Deck Engage	1
23	3296–8	Nut – Lock	1
24	56–7400	Arm – Lever, H.O.C.	1
25	3256–26	Washer – Flat	1
26	76–1340	Decal – Made In USA	1
27	92–7243	Decal – Control Panel	1

3317–116

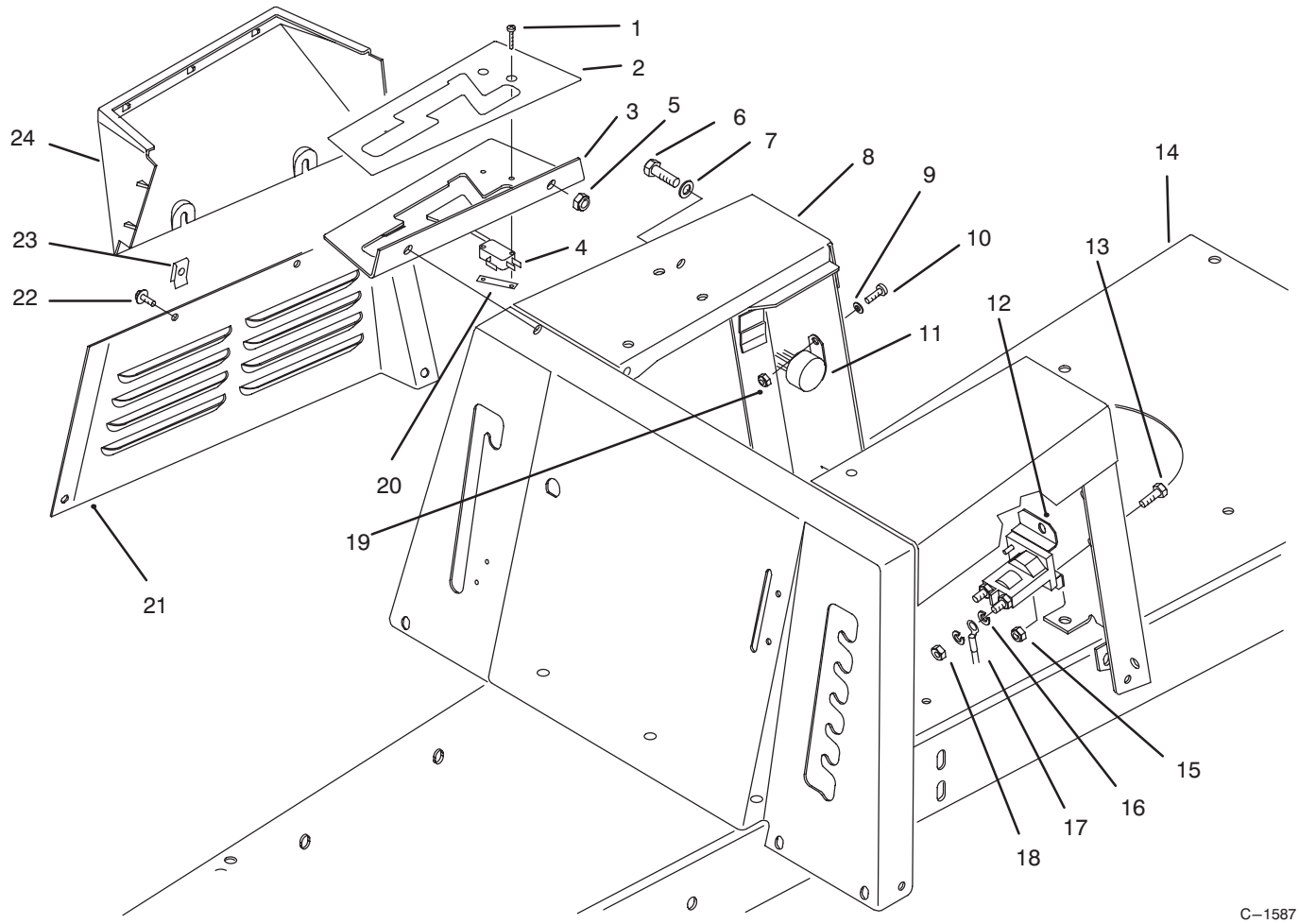

SEAT BODY & SIDE PANEL ASSEMBLY

Ref. No.	Part No.	Description	No. Used
1	147665	Screw – Phillips Hd.	2
2	92–1751	Decal – Shift Pattern	1
3	92–0895	Gate – Shift	1
4	88–9930	Switch – Micro, Short	1
5	3296–29	Nut – Lock	2
6	322–5	Screw – Cap Hex. Hd.	2
7	3256–23	Washer – Flat	2
8	92–0866	Body W.A. – Seat Support	1
9	3256–14	Washer – Flat	1
10	3290–134	Screw – Machine	1
11	28–7890	Module – Interlock	1
12	47–1910	Solenoid	1

Ref. No.	Part No.	Description	No. Used
13	321–4	Screw – Cap Hex. Hd.	2
14	92–0860	Frame	1
15	3296–42	Nut – Lock	2
16	3253–3	Washer – Lock	4
17	56–7670	Cable – Positive	1
18	3218–1	Nut – Jam	2
19	3296–2	Nut – Lock	1
20	3290–354	Nut – Double	1
21	92–0877	Panel – Seat Base, R.H.	1
22	32144–112	Screw – Sems	2
23	3290–191	Nut – Speed	2
24	88–9800	Cover – Gate, Shift	1

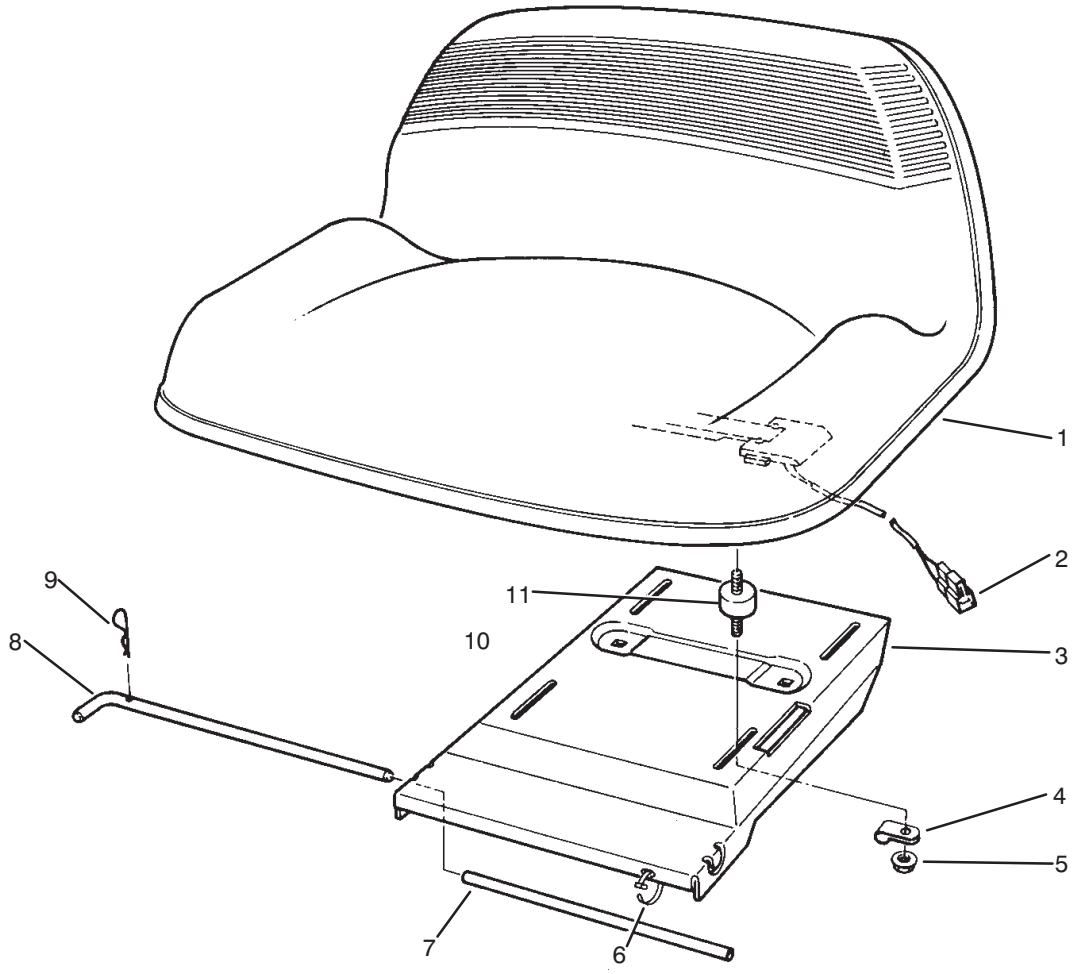

C–1936

SEAT ASSEMBLY

Ref. No.	Part No.	Description	No. Used
1	88–3950	Assembly – Seat	1
2	38–1420	Switch – Interlock	1
3	63–5540	Base – Seat	1
4	2412–68	Clamp – Wire	1
5	32128–20	Nut – Flange Hd.	4

Ref. No.	Part No.	Description	No. Used
6	3290–378	Tie – Cable	1
7	63–5670	Tube – Bumper, Seat Rod	1
8	80–2620	Rod – Base, Seat	1
9	3290–307	Pin – Cotter, Hair	1
11	62–5480	Isolator – Seat	4

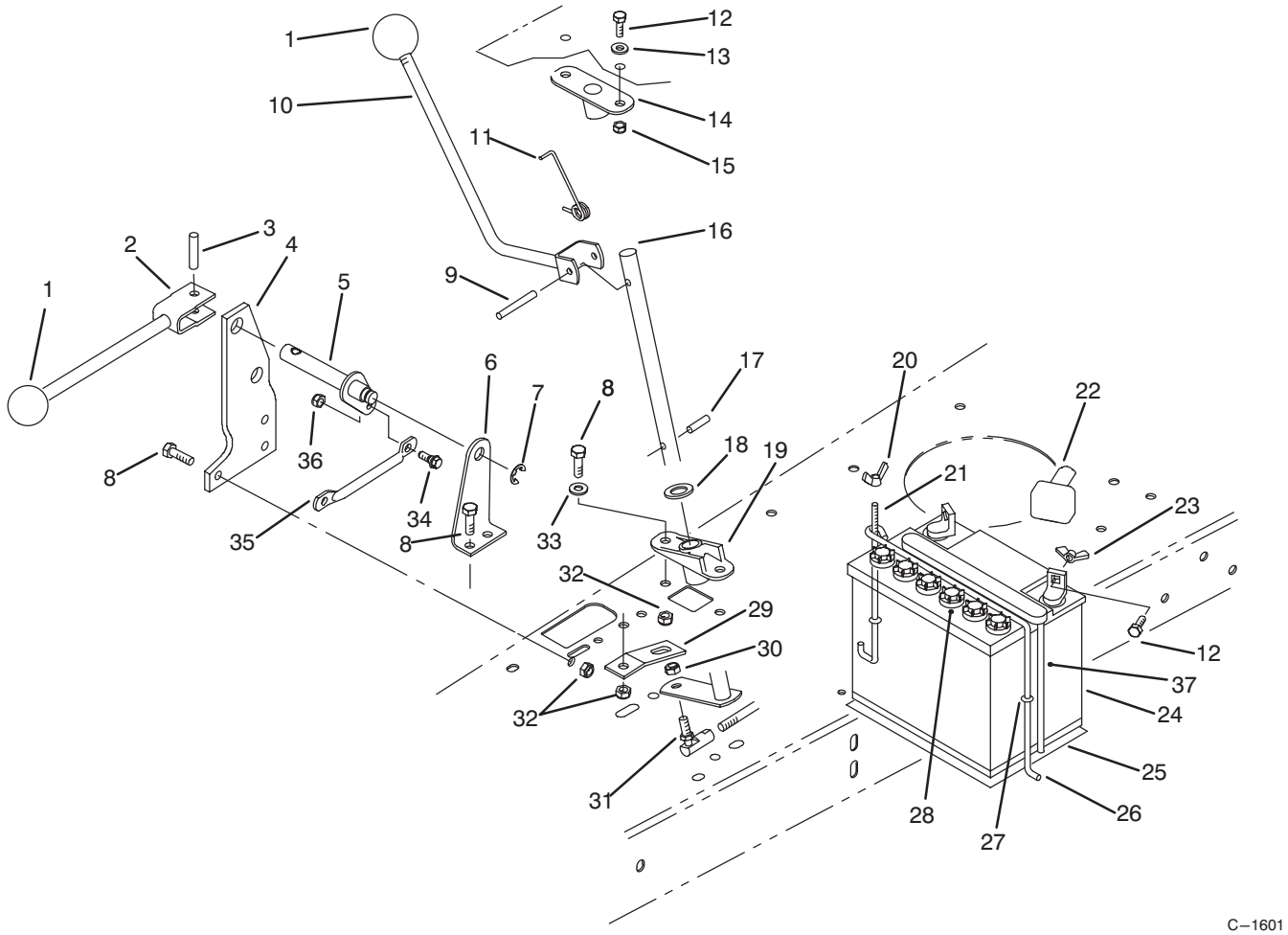

C–1601

TRANSMISSION LINKAGE ASSEMBLY

Ref. No.	Part No.	Description	No. Used
1	233–48	Knob	2
2	80–2400	Lever W.A. – Engage	1
3	32121–25	Pin – Roll	1
4	80–2350	Pivot – Outer	1
5	80–2370	Shaft W.A. – Pivot	1
6	80–2340	Bracket – Pivot, Inner	1
7	32120–47	Ring – Retaining	1
8	322–5	Screw – Cap Hex. Hd.	4
9	32121–78	Pin – Roll	1
10	92–0884	Lever W.A. – Shaft	1
11	92–0894	Spring – Torsion	1
12	321–4	Screw – Cap Hex. Hd.	2
13	3256–22	Washer – Flat	2
14	92–0888	Support – Shift, Upper	1
15	3296–42	Nut – Lock	2
16	92–0891	Shaft W. A. – Shift	1
17	32121–16	Pin – Roll	1
18	257–11	Washer	1
19	92–0887	Support – Shift, Lower	1

Ref. No.	Part No.	Description	No. Used
20	32103–12	Nut – Wing	1
21	56–7720	Post – Battery	1
22	28–8080	Boot – Terminal	1
23	32103–22	Nut – Wing	2
24	80–2600	Battery – 12 Volt (Incl. Ref. #28 & 37)	1
25	62–4300	Pad – Battery	1
26	56–7710	Hold Down – Battery	1
27	237–143	O–Ring	2
28	218–560	Cap – Battery	6
29	92–0896	Retainer – Spring	1
30	3296–4	Nut – Lock	1
31	2411–32	Ball Joint	1
32	3296–29	Nut – Lock	4
33	3256–23	Washer – Flat	2
34	65–5670	Screw – Shoulder	1
35	80–2330	Link – Bell Crank	1
36	3296–8	Nut – Lock	1
37	56–2540	Tube – Vent, Battery	1

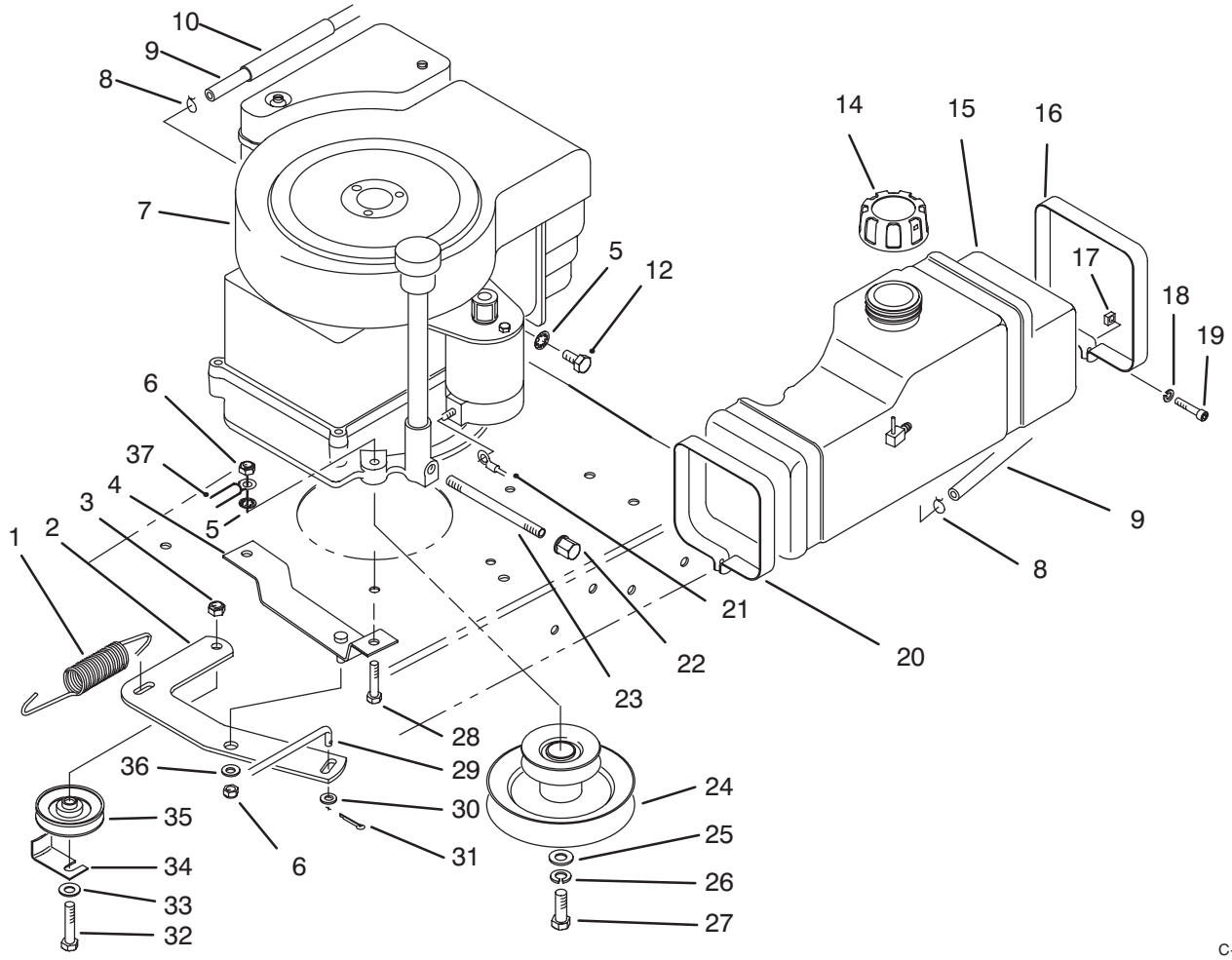

C–1937A

ENGINE ASSEMBLY

Ref. No.	Part No.	Description	No. Used
1	92–0879	Spring	1
2	92–0883	Plate – Mounting, Idler	1
3	3296–39	Nut – Lock	1
4	92–0881	Bracket W.A. – Traction	1
5	3254–2	Washer – Lock, Int. Tooth	4
6	3296–29	Nut – Lock	2
7		Engine – 10 H .P. Model 70080 (28B707–0126–01)	1
7		Engine – 12 H.P. Models 70120 (286707–0119–01)	1
8	2412–98	Clamp – Hose	2
9	47–2981	Hose – Fuel Line Model 70080	1
9	47–2961	Hose – Fuel Line Model 70120	1
10	62–5490	Support – Fuel Line	1
12	32144–14	Screw	2
14	55–3570	Cap – Fuel	1
15	56–7050	Tank – Fuel	1
16	57–4060	Retainer – Front	1

Ref. No.	Part No.	Description	No. Used
17	32107–11	Nut – Square	2
18	3253–3	Washer – Lock	2
19	3274–51	Screw – Hex. Socket Hd.	2
20	57–4070	Retainer – Rear	1
21	56–7670	Cable – Battery, Positive	1
22	288–10	Cap – Pipe	1
23	289–19	Nipple – Pipe	1
24	92–0873	Pulley – Engine	1
25	3256–25	Washer – Flat	1
26	3253–6	Washer – Lock	1
27	62–3760	Screw – Cap Hex. Hd.	1
28	322–7	Screw – Cap Hex. Hd.	1
29	92–0871	Rod – Traction	1
30	3256–22	Washer – Flat	1
31	3272–6	Pin – Cotter	1
32	323–9	Screw – Cap Hex. Hd.	1
33	3256–24	Washer – Flat	1
34	12–9020	Retainer – Belt	1
35	12–5820	Pulley – Idler	1
36	3256–57	Washer – Flat	1
37	54–3090	Cable – Battery Ground	1

ELECTRICAL SCHEMATIC

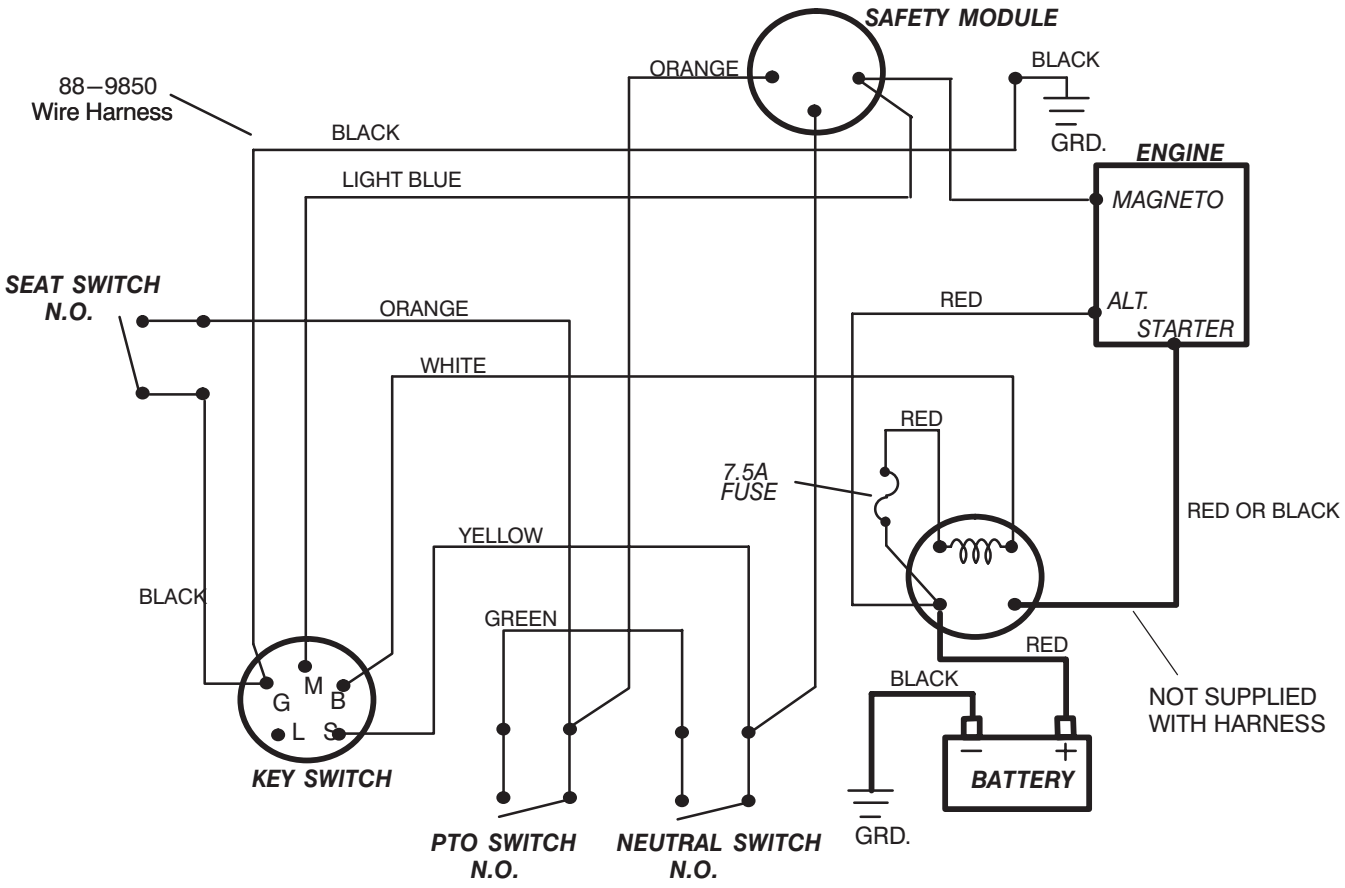

C–1553

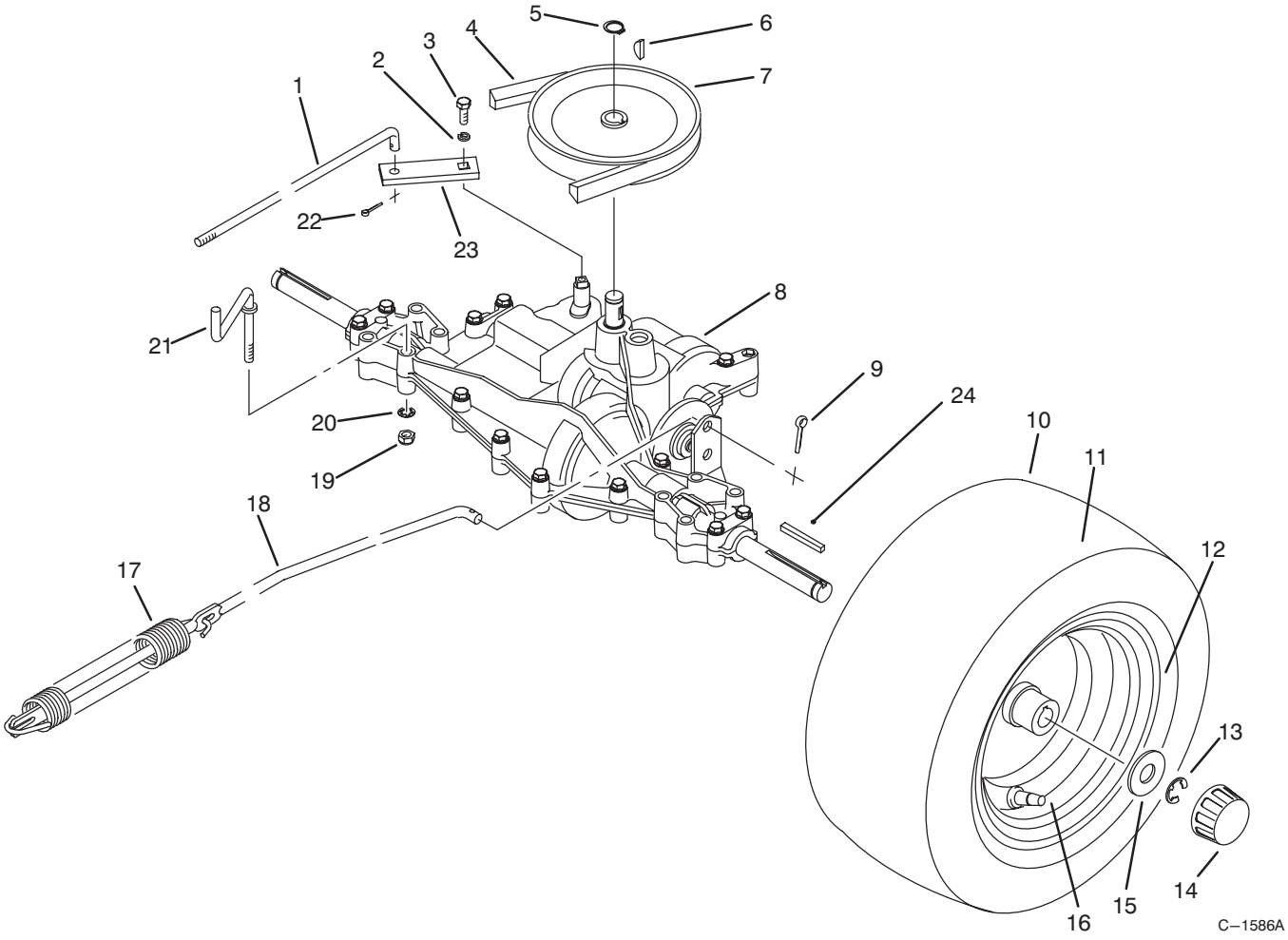

REAR AXLE ASSEMBLY

Ref. No.	Part No.	Description	No. Used
1	92–0889	Link – Shift	1
2	3253–3	Washer – Lock	1
3	329–4	Screw – Cap Hex. Hd.	1
4	92–0870	V–Belt – Traction	1
5	32120–64	Ring – Retaining	1
6	3257–23	Key	1
7	92–0874	Pulley	1
8	92–0862	Transaxle	1
9	3272–16	Pin – Cotter	1
10	231–117	Tire	2
11	232–39	Tube – Inner	2
12	88–9730	Rim	2

Ref. No.	Part No.	Description	No. Used
13	32151–48	Ring – Retaining	2
14	61–9780	Cap – Hub	2
15	28–2480	Washer	2
16	232–27	Stem – Valve	2
17	57–9940	Spring – Brake	1
18	92–0872	Rod – Brake	1
19	3296–29	Nut – Lock	1
20	3254–2	Washer – Lock, Int. Tooth	1
21	92–0899	Guide – Belt, Lower	1
22	3272–6	Pin – Cotter	1
23	92–0880	Arm – Shift, Transaxle	1
24	7–0036	Key – Square	2

3317–116

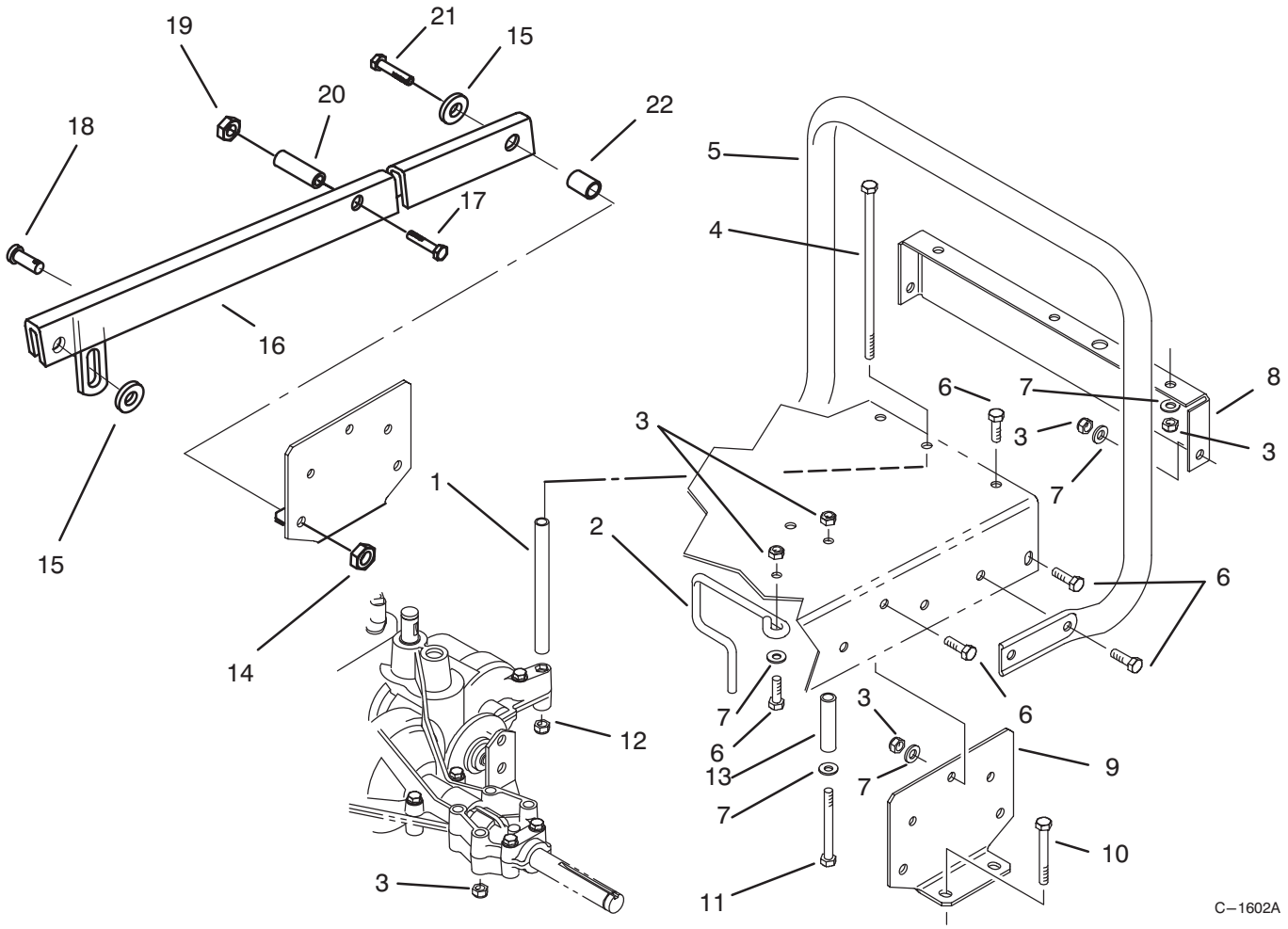

STAND BAR ASSEMBLY

Ref. No.	Part No.	Description	No. Used
1	92–0897	Spacer	1
2	92–0898	Guide – Belt	1
3	3296–29	Nut – Lock	17
4	322–50	Screw – Cap Hex. Hd.	1
5	92–0864	Standbar	1
6	322–5	Screw – Cap Hex. Hd.	15
7	3256–23	Washer – Flat	12
8	92–0861	Frame – Rear	1
9	92–0865	Support – Axle	2
10	322–12	Screw – Cap Hex. Hd.	4
11	322–14	Screw – Cap Hex. Hd.	2
12	3296–47	Nut – Lock	1

Ref. No.	Part No.	Description	No. Used
13	76–1560	Spacer	2
14	3296–59	Nut – Lock	3
15	3256–24	Washer – Flat	4
16	76–1540	Arm – Suspension R.H.	1
*	76–1550	Arm – Suspension L.H.	1
17	323–14	Screw – Hex Hd. Cap	2
18	283–42	Pin – Clevis	2
19	3296–39	Nut – Lock	1
20	76–1560	Spacer – Split	2
21	323–9	Screw – Hex Hd. Cap	2
22	56–7430	Pin – Support	2

*Not Illustrated

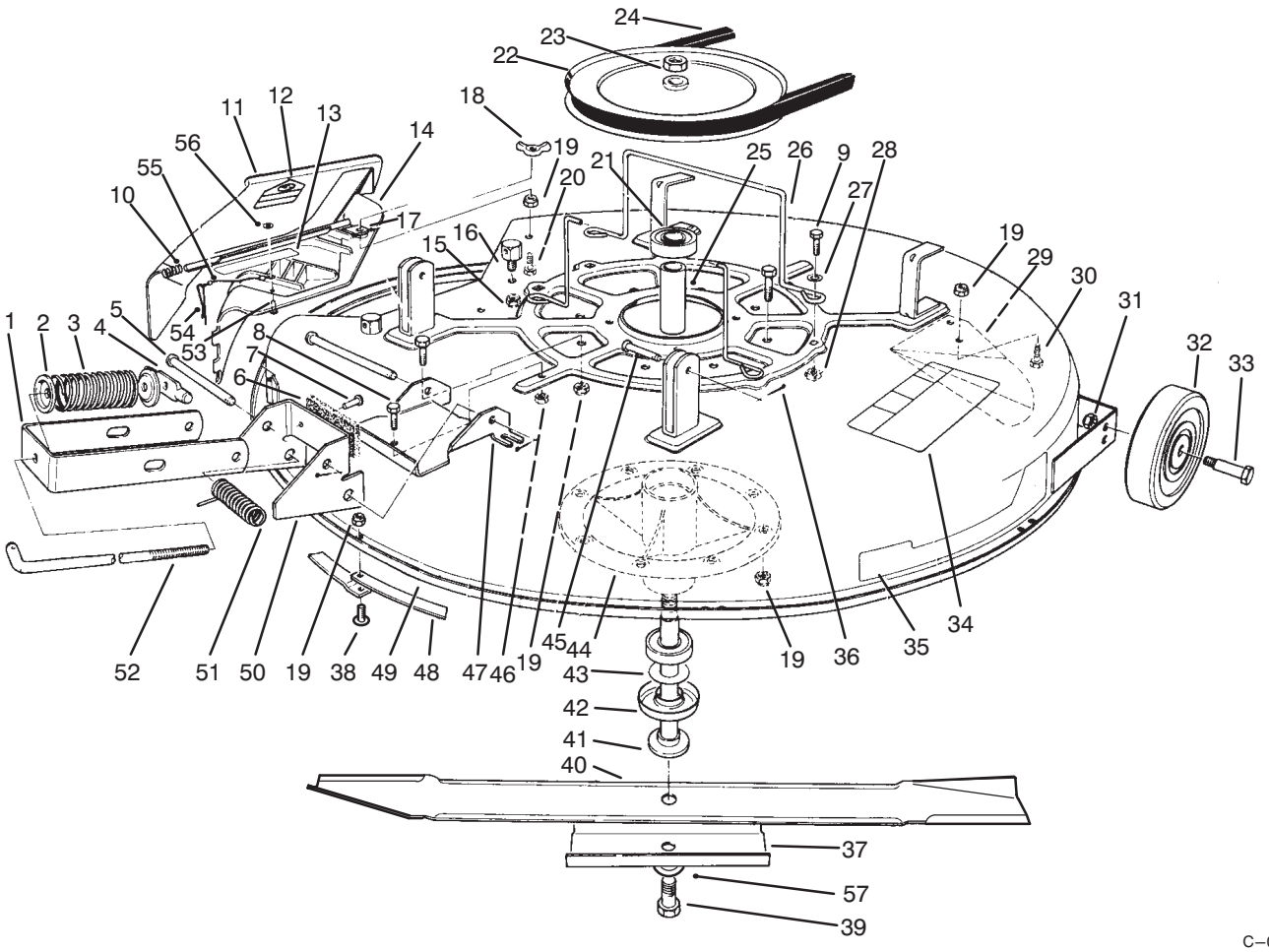

C–0792B

MOWER ASSEMBLY – RECYCLER

Ref. No.	Part No.	Description	No. Used
1	47–1180	Bracket – Engagement	1
2	47–1140	Retainer – Spring, Top	2
3	47–0960	Spring – Compression	1
4	47–1200	Shaft – Adjusting	1
5	80–2570	Pin – Clevis	2
6	80–2550	Pad – Brake	1
7	3290–282	Rivet	2
8	321–4	Screw – Cap Hex. Hd.	1
9	322–5	Screw – Cap Hex. Hd.	12
10	28–8010	Spring – Torsion	1
11	44–5930	Assembly – Deflector (Incl. Ref. #12)	1
12	54–9220	Decal – Caution, Deflector	1
13	68–3650	Decal – Warning, Deflector	1
14	82–6150	Assy. – Cover, Discharge (Incl. Ref. #53–56)	1
15	3296–59	Nut – Lock	1
16	28–7350	Post – Pivot	1
17	83–7010	Brace – Cover, Rear	1
18	32103–2	Nut – Wing	1
19	3296–29	Nut – Lock	24
20	322–6	Screw – Cap Hex. Hd.	1
21	251–297	Bearing	2
22	80–4470	Pulley	1
23	3219–7	Nut – Hex. Hd.	1
24	92–0875	V–Belt	1
25	83–7020	Spacer – Bearing	1
26	60–9730	Guide – Belt	2
27	3256–23	Washer – Flat	4
28	3290–496	Nut – Retainer	4

Ref. No.	Part No.	Description	No. Used
29	80–2630	Kicker – 32”	4
30	322–3	Screw – Cap Hex. Hd.	7
31	3296–39	Nut – Lock	2
32	61–9760	Wheel – Deck	2
33	56–6590	Bolt – Wheel	2
34	66–1340	Decal – Danger	1
35	92–9521	Decal – Recycler	1
36	3272–6	Pin – Cotter	2
37	80–4570	Stiffener – Blade	1
38	32122–14	Screw – Truss, Phillips Hd.	8
39	26–0671	Bolt – Blade	1
40	80–4430	Blade – Recycler	1
41	80–4350	Shaft – Spindle	1
42	80–4370	Shield – Bearing	1
43	80–4390	Spacer – Hardened	1
44	56–7030	Body – Spindle	1
45	283–2	Pin – Clevis	2
46	3296–8	Nut – Lock	1
47	80–2560	Plate – Deck, Brake Mtg.	1
48	80–4490	Ring – Deck	4
49	14–9999	Deck – Cutting, Recycler	1
50	80–2530	Assembly – Brake (Incl. Ref. #6–7)	1
51	40–6230	Spring – Torsion	1
52	80–2580	Rod – Adjusting	1
53	3290–282	Rivet	2
54	28–8130	Pin – Chute, Locking	1
55	28–8070	Lanyard	1
56	3256–49	Washer – Flat	1
57	3290–465	Washer – Belleville	1

PEERLESS TRANSAXLE MODEL NO. 915–019

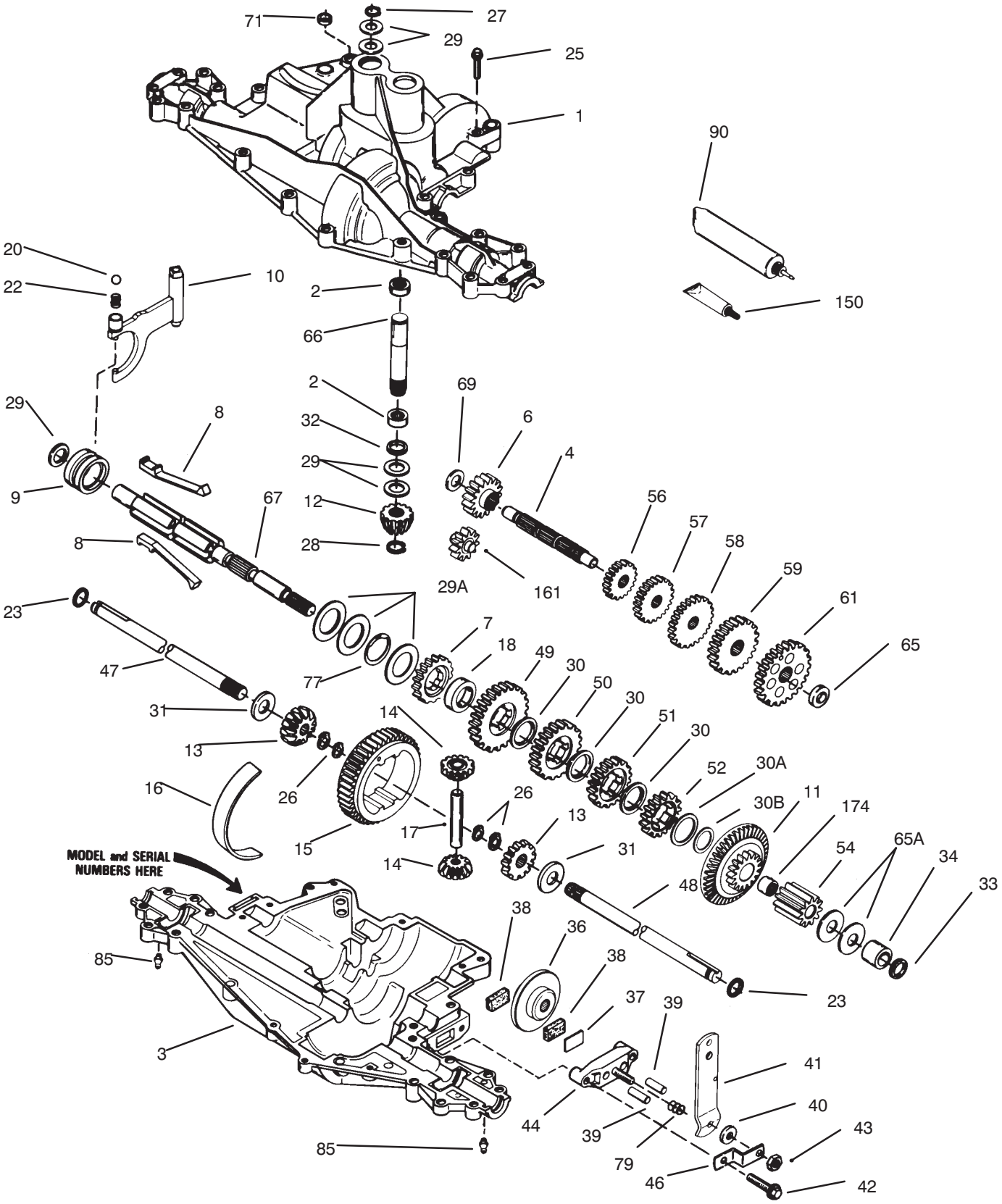

PEERLESS TRANSAXLE MODEL NO. 915–019

Ref. No.	Part No.	Description	No. Used
1	772117	Transaxle Cover	1
2	780086	Needle Bearing	2
3	770114	Transaxle Case	1
4	776300	Countershaft	1
6	778281	Spur Gear (16 Teeth)	1
7	778122A	Spur Gear (22 Teeth)	1
8	792133	Shift Key	4
9	784352	Shift Collar	1
10	784365	Shift Rod & Fork	1
11	778290	Bevel Gear & Bearing (44/16 Teeth) (Incl. Ref. #174)	1
12	778262	Bevel Pinion (14 Teeth)	1
13	778221	Bevel Gear (16 Teeth)	2
14	778068	Differential Pinion	2
15	778260	Ring Gear	1
16	786150	Bearing Strip	1
17	78139	Drive Pin	1
18	786147	Neutral Spacer	1
20	792139	Ball (3/8” dia.)	1
22	792142	Spring	1
23	788061	Seal Ring	2
25	792073	Screw	17
26	792125	Retaining Ring (pkg. of 2)	4
27	792035	Retaining Ring	1
28	788040	Retaining Ring	1
29	780072	Washer	5
29A	780090	Thrust Washer	3
30	780108	Washer	3
30A	789145	Washer	1
30B	780178	Washer	1
31	780001	Washer	2
32	792001	O–Ring	1
33	788076	O–Ring	1
34	780159	Bushing	1
36	790071	Brake Disk	1
37	790007	Brake Pad Plate	1
38	790006	Brake Pad	2
39	786026	Dowel Pin	2
40	792076	Washer	1
41	790045	Brake Lever	1
42	792073	Screw	2
43	792075	Locknut	1
44	790025	Brake Pad Holder	1
46	786086	Brake Lever Bracket	1
47	774930	Axle (16–3/4” lg.)	1
48	774931	Axle (11–9/16” lg.) (Incl. Ref. #26)	1
49	778124A	Spur Gear (30 Teeth)	1
50	778123A	Spur Gear (25 Teeth)	1
51	778122A	Spur Gear (22 Teeth)	1
52	778273	Spur Gear (19 Teeth)	1
54	778263	Spur Gear (11 Teeth)	1
56	778126A	Spur Gear (20 Teeth)	1
57	778127A	Spur Gear (25 Teeth)	1
58	778128A	Spur Gear (28 Teeth)	1
59	778129A	Spur Gear (30 Teeth)	1
61	778265	Spur Gear (34 Teeth)	1
65	780162	Washer	1
65A	780160	Washer	2
66	776299	Input Shaft (3.522” lg.)	1
67	776352	Shifter & Brake Shaft	1
69	780161	Thrust Washer	1
71	788069	Square Cut Ring	1
77	788078A	Inverted Retaining Ring (pkg. of 2)	1
79	792144	Spring	1
90	788067B	Grease (32 oz. btl. Bentonite grease)	1
150	510334	Gasket Eliminator (Loctite #515)	1
161	776302	Reverse Idler Assembly	1
174	780085	Needle Bearing	1

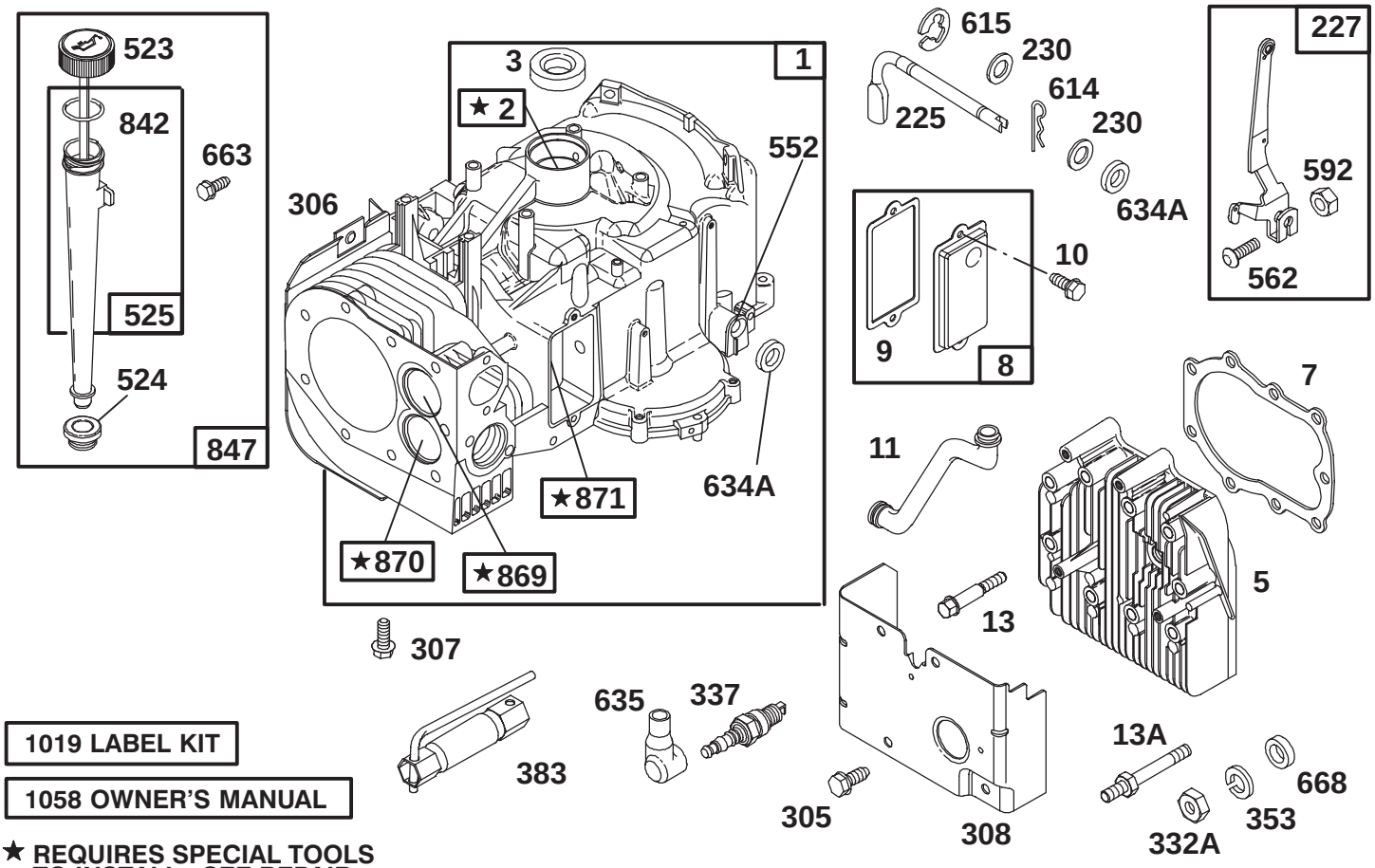

1019 LABEL KIT

1058 OWNER'S MANUAL

★ **REQUIRES SPECIAL TOOLS TO INSTALL. SEE REPAIR INSTRUCTION MANUAL.**

Assemblies include all parts shown in frames.

ENGINE BRIGGS & STRATTON MODEL 28B707–0126–01

Ref. No.	Part No.	Description	No. Used
1	496413	Cylinder Assembly	
2	399265	Bearing–Cylinder	
★3	391086	Seal–Oil	
5	494240	Head–Cylinder	
★7	271866	Gasket–Cylinder Head	
8	495735	Breather Assembly	
★9	27803	Gasket–Valve Cover	
10	94621	Screw–Sem	
11	281246	Tube–Breather	
13	94622	Screw–Cylinder Head	
13A	94776	Stud–Cylinder Head	
225	231058	Crank–Governor	
227	493935	Lever Assy.–Governor	
230	94742	Washer–Governor Lever	
305	94786	screw–Hex. Head	
306	224545	Shield–Cylinder	
307	94386	Screw–Self Tap	
308	491490	Cover–Cylinder Head	
332A	94314	Nut–Hex.	
337	802592	Plug–Spark	
353	94315	Washer–Lock	
383	89838	Wrench–Spark Plug	

Ref. No.	Part No.	Description	No. Used
523	495229	Cap–Oil Filler	
★524	281370	Seal–Filler Tube	
525	496068	Tube–Oil Filler	
552	231597	Bushing–Gov. Crank	
562	92613	Bolt–Governor Lever	
592	231082	Nut–Hex.	
614	93306	Pin–Cotter	
615	93307	Retainer–E-Ring	
★634A	491323	Seal–Governor	
635	66538	Elbow–Spark Plug	
663	94073	Screw–Hex. Head	
668	231109	Spacer	
★842	270920	Seal–Oil Filler Cap	
847	496367	Fill Group–Oil	
869	261463	Seat–Intake Valve	
870	213316	Seat–Exhaust Valve	
871	261961	Guide–Exhaust Valve	
		Note: 231218 Guide–Intake Valve (Brass)	
1019	491254	Label Kit	
1058	272697	Owner's Manual	

★ Included in Gasket Set–Part No. 494241.
◆ Included in Carburetor Gasket Set–Part No. 494385.
● Included in Carburetor Kit–Part No. 496622.

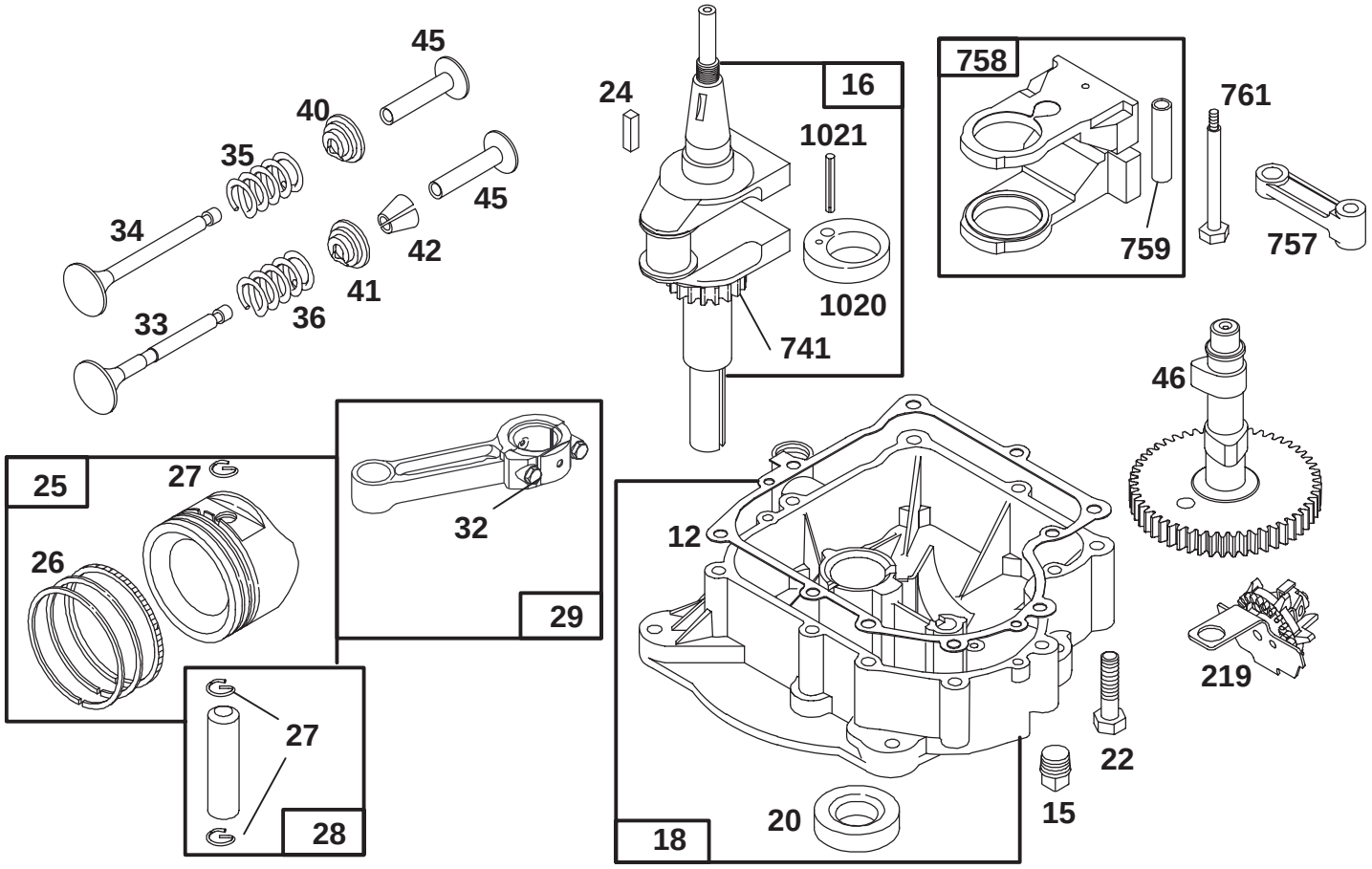

Assemblies include all parts shown in frames.

ENGINE BRIGGS & STRATTON MODEL 28B707—0126—01

Ref. No.	Part No.	Description	No. Used
★12	271916	Gasket—Crankcase (.015" Thick)	
★	271997	Gasket—Crankcase (.005" Thick)	
★	271996	Gasket—Crankcase (.009" Thick)	
15	94239	Plug—Oil Drain	
16	495162	Crankshaft **Note:** For Timing Gear Key—Order 94196.	
18	494238	Base—Engine	
★20	291675	Seal—Oil	
22	94624	Screw—Sem	
24	222698	Key—Flywheel	
25	394661	Piston Assembly (Standard)	
	394662	Piston Assy. (.010" O.S.)	
	394663	Piston Assy. (.020" O.S.)	
	394664	Piston Assy. (.030" O.S.)	
26	391780	Ring Set (Standard)	
	392331	Ring Set (Chrome Std.)	
	391781	Ring Set (.010" O.S.)	
	391782	Ring Set (.020" O.S.)	
	391783	Ring Set (.030" O.S.)	

Ref. No.	Part No.	Description	No. Used
27	260924	Lock—Piston Pin	
28	299691	Pin—Piston (Standard)	
	391286	Pin—Piston (.005" O.S.)	
29	490348	Rod—Connecting	
	490469	Rod—Conn. (.020" U.S.)	
32	94671	Screw—Conn. Rod	
33	262246	Valve—Exhaust	
34	262247	Valve—Intake	
35	65906	Spring—Valve	
36	26828	Spring—Valve	
40	221596	Retainer—Intake Valve	
41	292260	Rotocoil—Ex. Valve	
42	494553	Retainer—Rotocoil	
45	262248	Tappet—Valve	
46	212897	Gear—Cam	
219	490815	Gear—Gov.	
741	262932	Gear—Timing	
757	213998	Link—Counterweight	
758	399891	Counterweight Assy.	
759	298909	Pin—Counterweight	
761	94593	Screw—Counterweight	
1020	262243	Eccentric	
1021	94160	Pin—Eccentric	

★ Included in Gasket Set—Part No. 494241.
◆ Included in Carburetor Gasket Set—Part No. 494385.
● Included in Carburetor Kit—Part No. 496622.

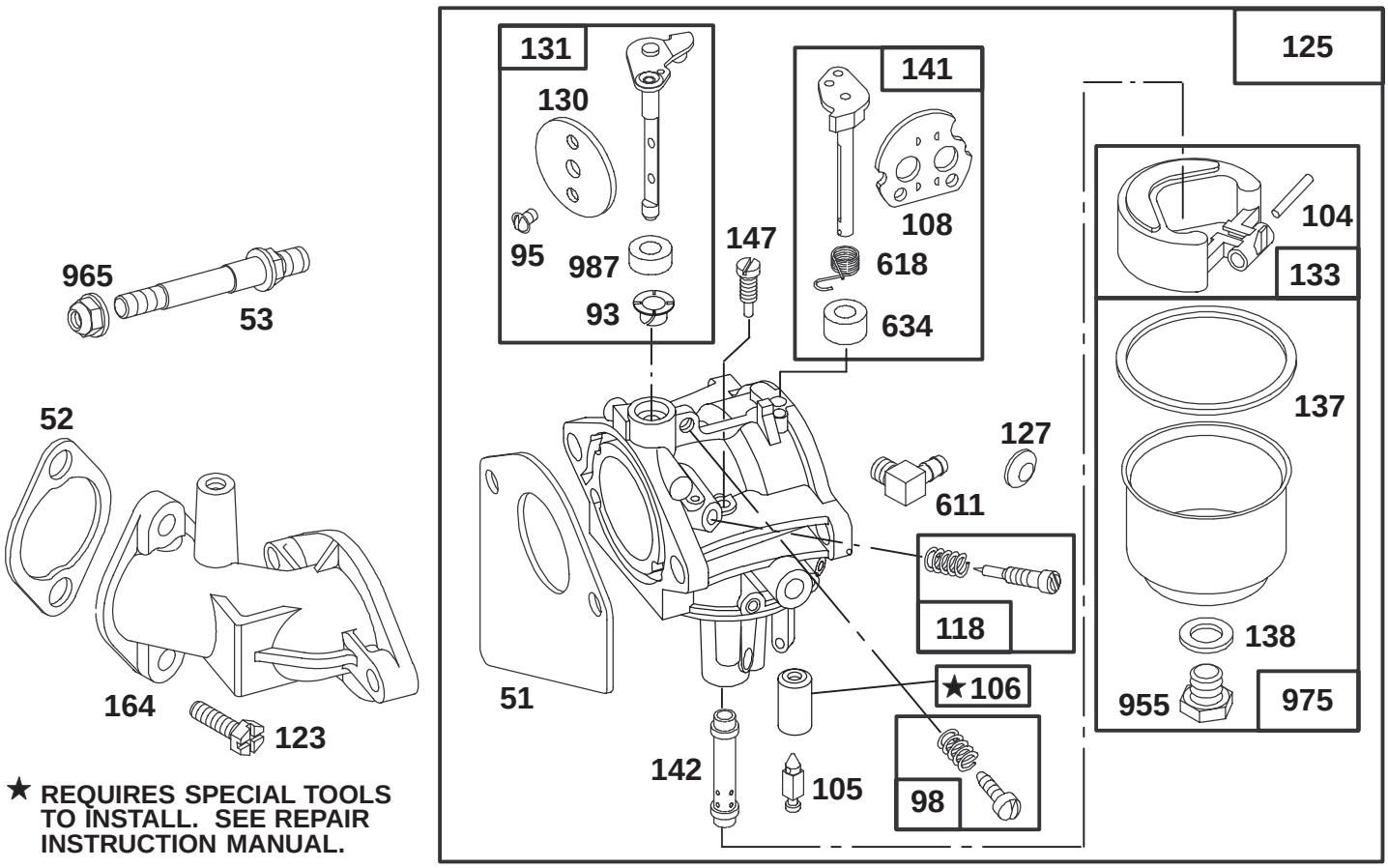

★ **REQUIRES SPECIAL TOOLS TO INSTALL. SEE REPAIR INSTRUCTION MANUAL.**

Assemblies include all parts shown in frames.

ENGINE BRIGGS & STRATTON MODEL 28B707–0126–01

Ref. No.	Part No.	Description	No. Used
●◆51	272465	Gasket–Carburetor	
⋆52	272554	Gasket–Carburetor	
53	94637	Stud–Carb. Mtg.	
●93	281346	Bushing–Throttle Shaft	
●95	94098	Screw–Throttle	
98	495800	Screw–Idle Adjust	
●104	231789	Pin–Float Hinge	
●105	231855	Valve–Inlet Needle	
●106	231854	Seat–Inlet	
108	224666	Valve–Choke	
118	496589	Valve–Needle	
123	94616	Screw–Elbow Mtg.	
125	496592	Carburetor	
●127		Plug–Welch (Sold in Kit Only).	
130	224668	Valve–Throttle	
131	494885	Shaft–Throttle	
133	494381	Float–Carburetor	

Ref. No.	Part No.	Description	No. Used
●◆137	281165	Gasket–Float Bowl	
●◆138	281164	Washer–Float Bowl	
141	495931	Shaft–Choke	
●142	496519	Nozzle–Carburetor **Note:** 496623 Nozzle–Carb. (High Altitude) **Includes:** 281164 Washer–Float Bowl	
●147	231794	Pilot–Jet	
164	213819	Carburetor–Elbow	
611	493496	Elbow–Fuel Pipe	
618	262803	Spring–Choke Return	
●634	281168	Seal–Choke Shaft	
955	94642	Screw–Fuel Bowl	
965	94010	Nut–Hex.	
975	494378	Bowl–Float	
●987	281166	Seal–Throttle Shaft	

⋆ Included in Gasket Set–Part No. 494241.
◆ Included in Carburetor Gasket Set–Part No. 494385.
● Included in Carburetor Kit–Part No. 496622.

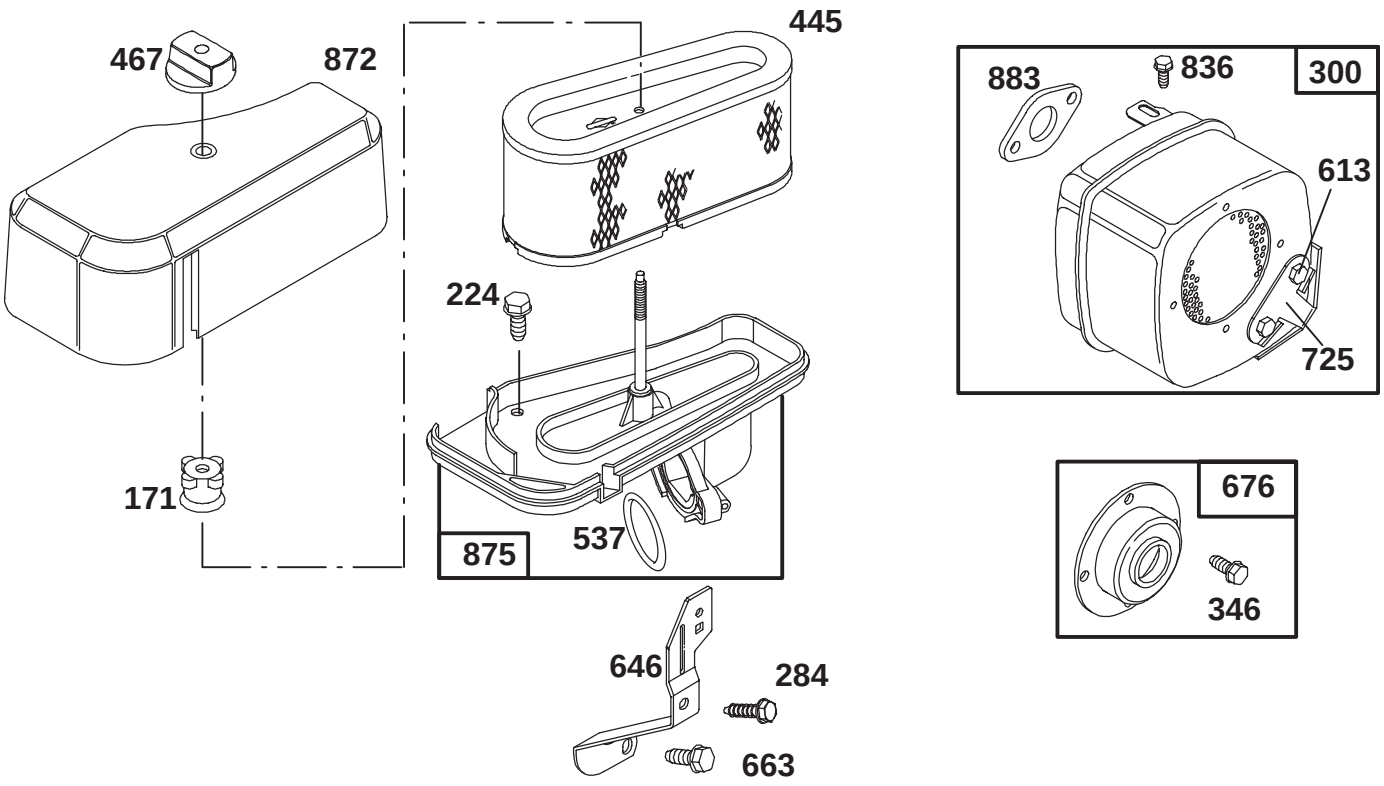

Assemblies include all parts shown in frames.

ENGINE BRIGGS & STRATTON MODEL 28B707—0126—01

Ref. No.	Part No.	Description	No. Used
171	281051	Nut—Air Cleaner Mtg.	
224	94729	Screw—Air Cleaner Sem	
284	94704	Screw—Air Cleaner	
300	491413	Muffler—Exhaust	
346	93705	Screw—Hex. Head	
445	493910	Cartridge—Air Cleaner	
467	493903	Knob—Air Cleaner	
★537	281106	Gasket—Air Cleaner	
613	93927	Screw—Hex. Hd.	

Ref. No.	Part No.	Description	No. Used
646	224546	Brace—Air Cleaner	
663	94620	Screw—Hex. Hd.	
676	396903	Deflector—Muffler	
725	223023	Shield—Muffler	
836	94786	Screw—Hex. Hd.	
872	281105	Cover—Air Cleaner	
875	496368	Body—Air Cleaner	
★883	272293	Gasket—Exhaust Pipe	

★ Included in Gasket Set—Part No. 494241.
◆ Included in Carburetor Gasket Set—Part No. 494385.
● Included in Carburetor Kit—Part No. 496622.

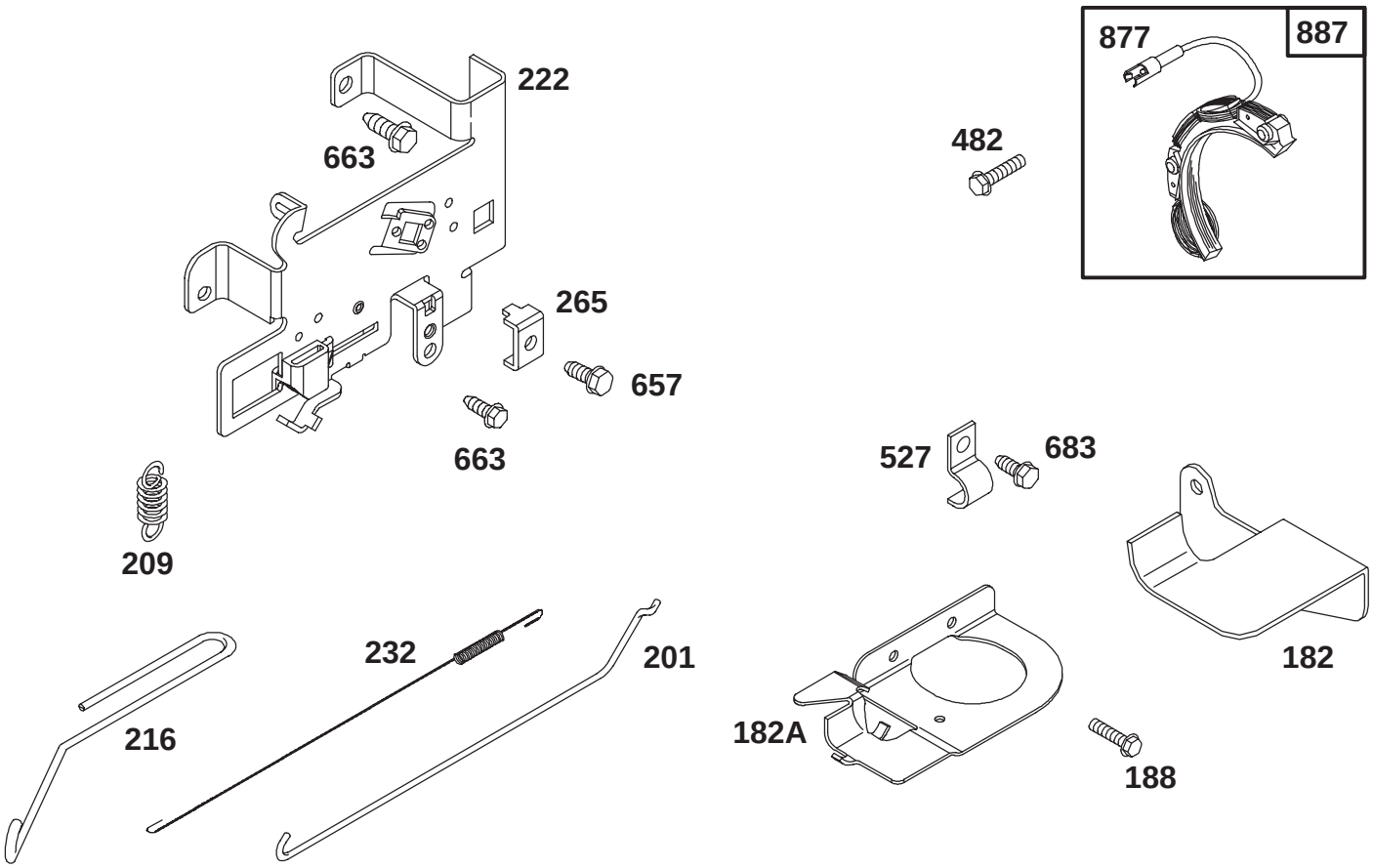

Assemblies include all parts shown in frames.

ENGINE BRIGGS & STRATTON MODEL 28B707–0126–01

Ref. No.	Part No.	Description	No. Used
182	223925	Bracket–Fuel Tank (R.H.)	
182A	223866	Bracket–Fuel Tank (L.H.)	
188	94480	Screw–Sem	
201	262767	Link–Governor	
209	260871	Spring–Governor	
216	262766	Link–Choke	
222	495611	Plate–Gov. Control	
232	262785	Spring–Governor Link	

Ref. No.	Part No.	Description	No. Used
265	221535	Clamp–Casing	
482	93621	Screw–Sem	
527	221428	Clamp	
657	93496	Screw–Sem	
663	94620	Screw–Hex. Hd.	
683	93572	Screw–Hex. Hd.	
877	393814	Diode Assy.	
887	391529	Alternator	

★ Included in Gasket Set–Part No. 494241.
◆ Included in Carburetor Gasket Set–Part No. 494385.
● Included in Carburetor Kit–Part No. 496622.

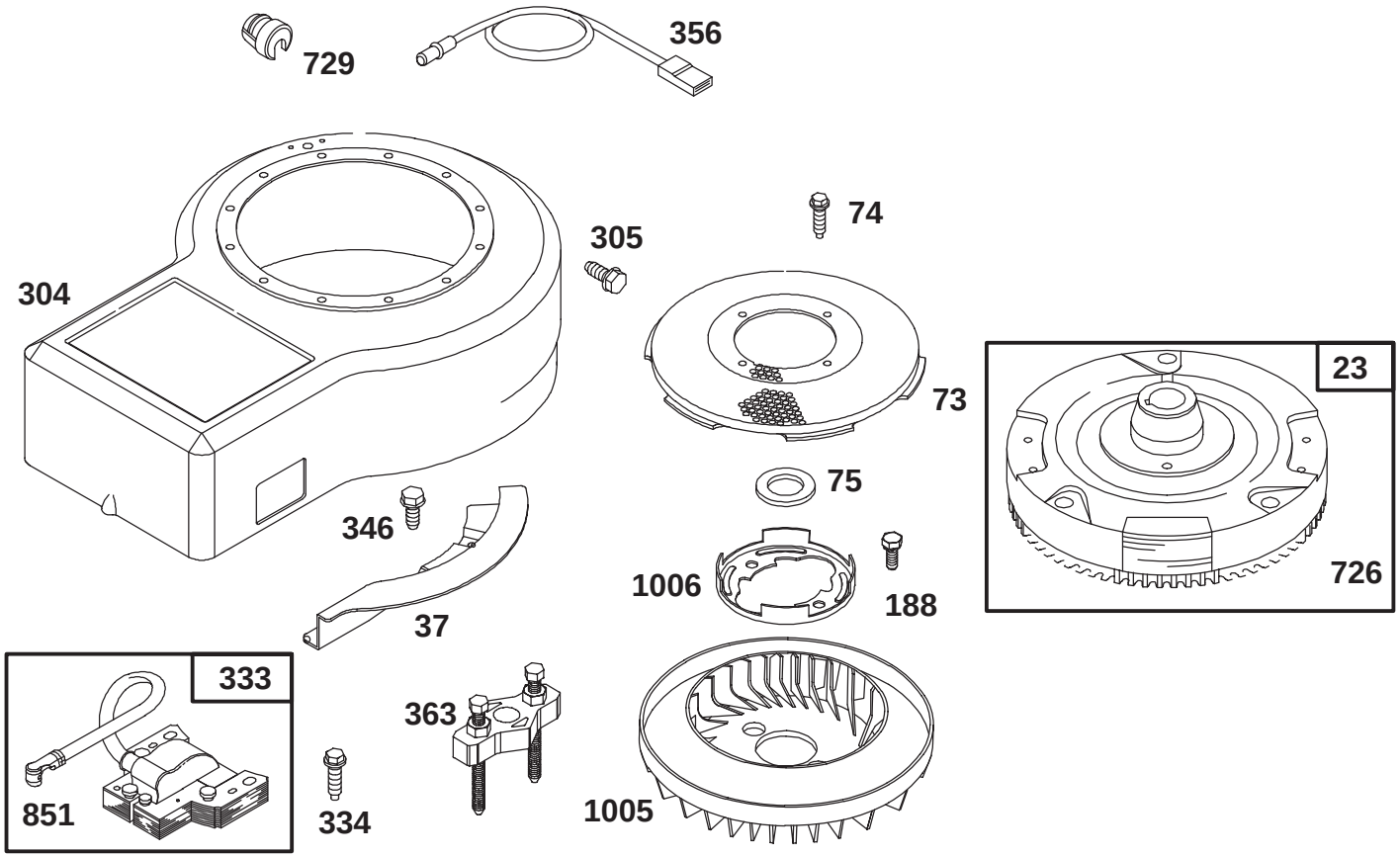

Assemblies include all parts shown in frames.

ENGINE BRIGGS & STRATTON MODEL 28B707—0126—01

Ref. No.	Part No.	Description	No. Used
23	492326	Flywheel	
37	224502	Guard—Flywheel	
73	224518	Screen—Rotating	
74	93758	Screw—Sem	
75	224061	Washer—Spring	
188	94627	Screw—Sem	
304	496319	Housing—Blower	
333	492341	Armature—Magneto	
334	94731	Screw—Sem	

Ref. No.	Part No.	Description	No. Used
346	93705	Screw—Hex. Head	
356	494328	Wire—Ground	
363	19203	Puller—Flywheel	
726	392134	Gear—Ring (Includes Mtg. Hardware)	
729	281159	Clip—Lead Wire	
851	493880	Terminal—Ignition Cable	
1005	280687	Fan—Flywheel	
1006	224413	Retainer—Fan	

★ Included in Gasket Set—Part No. 494241.
◆ Included in Carburetor Gasket Set—Part No. 494385.
● Included in Carburetor Kit—Part No. 496622.

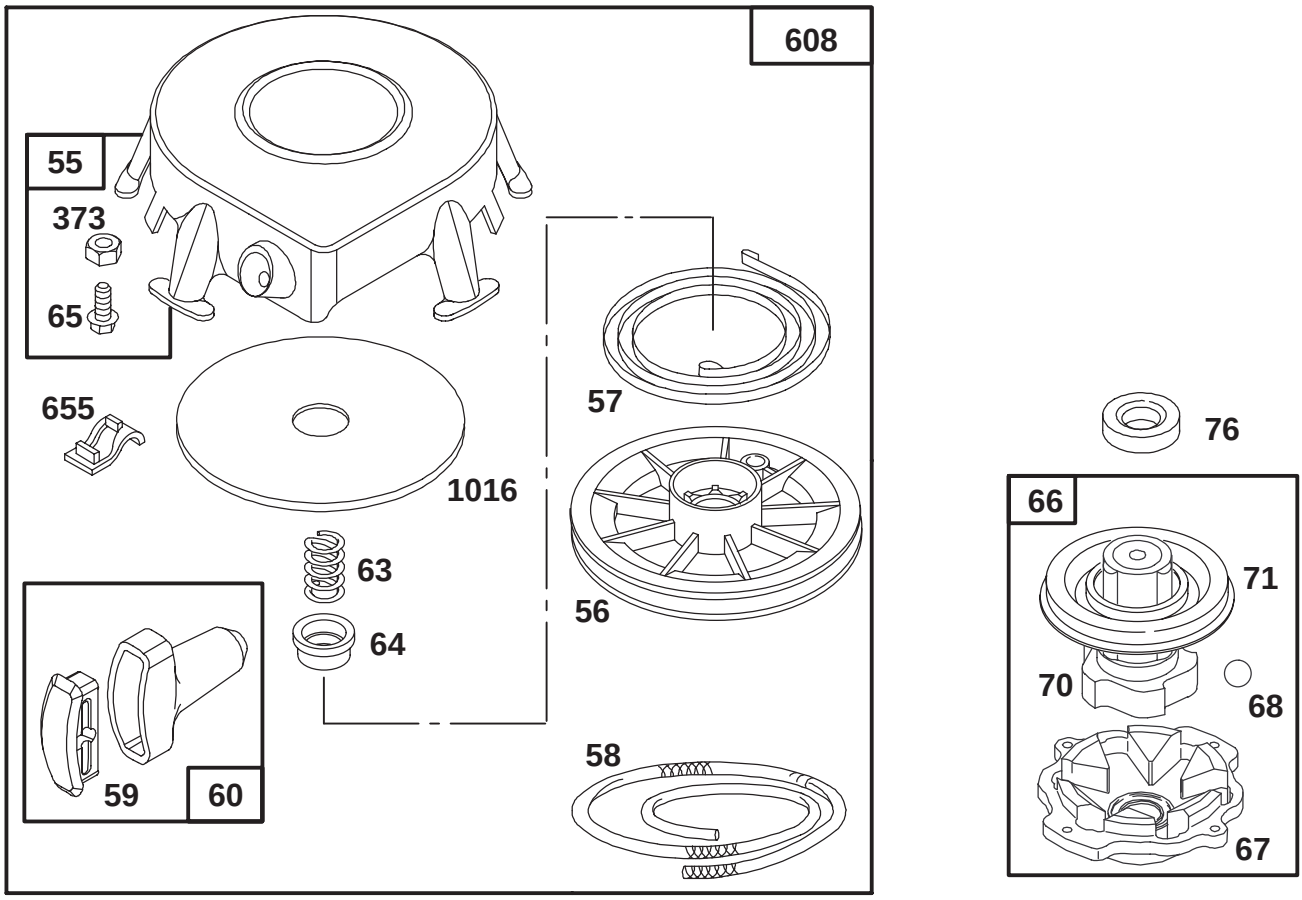

Assemblies include all parts shown in frames.

ENGINE BRIGGS & STRATTON MODEL 28B707–0126–01

Ref. No.	Part No.	Description	No. Used
55	393576	Housing–Rewind Starter (Includes 63" Rope)	
56	295871	Pulley–Rewind Starter	
57	490179	Spring–Rewind Starter	
58	66884	Rope–Starter	
59	490653	Insert–Starter Handle	
60	490652	Handle–Rewind Starter	
63	260414	Spring–Ratchet	
64	230543	Adapter– Spring	
65	94128	Screw–Sem	

Ref. No.	Part No.	Description	No. Used
66	495970	Clutch–Starter	
67	394897	Housing–Clutch	
68	63770	Ball–Clutch	
70	298799	Ratchet–Clutch	
71	394506	Washer–Retainer	
76	68238	Washer–Sealing	
373	92987	Nut–Hex.	
608	390391	Starter Assy.–Rewind	
655	222598	Anchor–Spring	
1016	490817	Spacer	

★ Included in Gasket Set–Part No. 494241.
◆ Included in Carburetor Gasket Set–Part No. 494385.
● Included in Carburetor Kit–Part No. 496622.

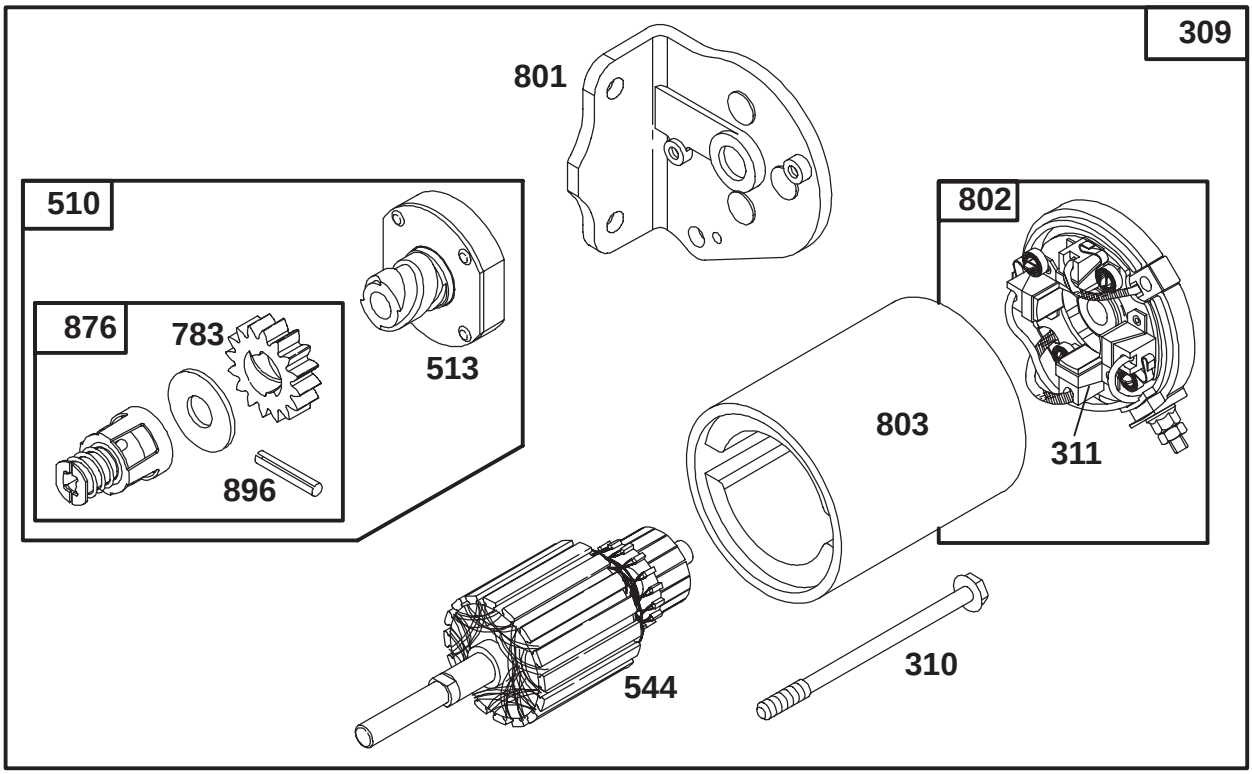

Assemblies include all parts shown in frames.

ENGINE BRIGGS & STRATTON MODEL 28B707—0126—01

Ref. No.	Part No.	Description	No. Used
309	394805	Motor—Starter	
310	94003	Bolt—Thru	
311	395538	Brush Set—Starter	
510	495878	Drive—Starter	
513	398003	Clutch Assembly	
544	390837	Armature—Starter	

Ref. No.	Part No.	Description	No. Used
783	280104	Gear	
801	394856	Cap—Drive	
802	395537	Cap—End	
803	398159	Housing—Starter	
876	495877	Kit—Spring	
896	94288	Pin—Roll	

★ Included in Gasket Set—Part No. 494241.
◆ Included in Carburetor Gasket Set—Part No. 494385.
● Included in Carburetor Kit—Part No. 496622.

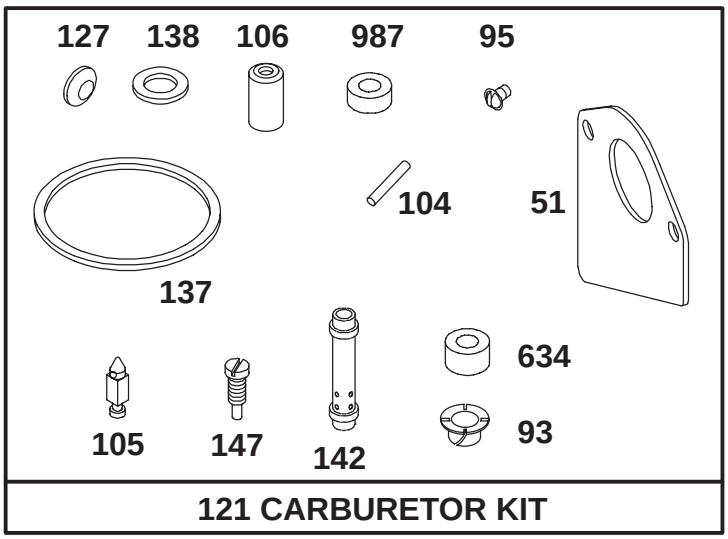

121 CARBURETOR KIT

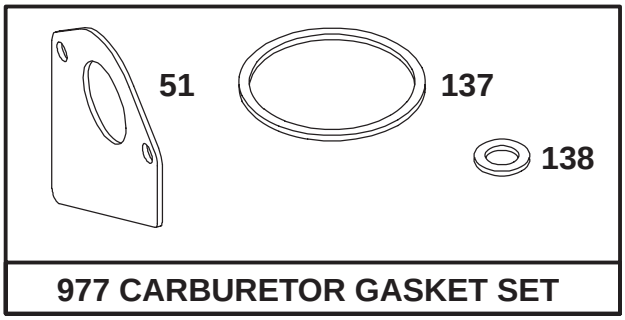

977 CARBURETOR GASKET SET

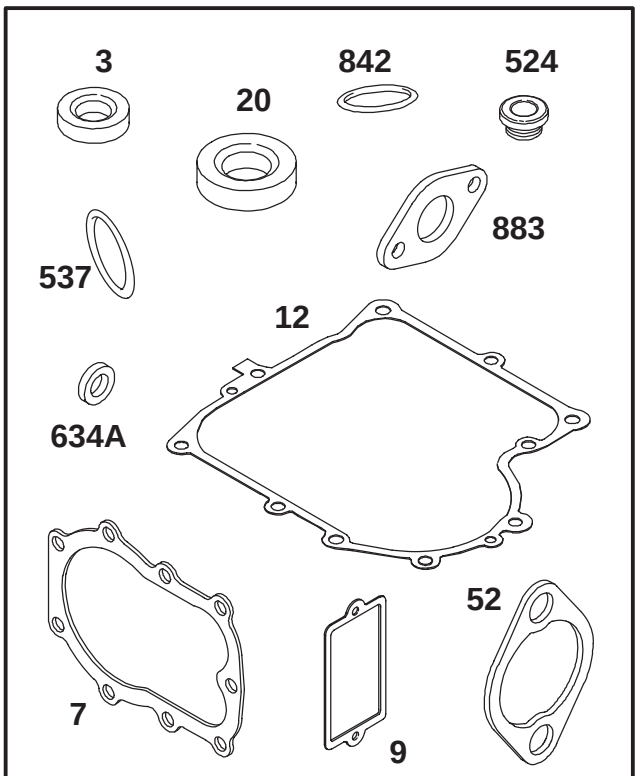

358 GASKET SET

Assemblies include all parts shown in frames.

ENGINE BRIGGS & STRATTON MODEL 28B707–0126–01

Ref. No.	Part No.	Description	No. Used
★3	391086	Seal–Oil	
★7	271866	Gasket–Cylinder Head	
★9	27803	Gasket–Valve Cover	
★12	271916	Gasket–Crankcase (.015” Thick)	
★	271997	Gasket–Crankcase (.005” Thick)	
★	271996	Gasket–Crankcase (.009” Thick)	
★20	291675	Seal–Oil	
●◆51	272465	Gasket–Carburetor	
★52	272554	Gasket–Carburetor	
●93	281346	Bushing–Throttle Shaft	
●95	94098	Screw–Throttle	
●104	231789	Pin–Float Hinge	
●105	231855	Valve–Inlet Needle	
●106	231854	Inlet Valve Seat	
121	496622	Carburetor Kit	

Ref. No.	Part No.	Description	No. Used
●127		Plug–Welch (Sold in Kit Only).	
●◆137	281165	Gasket–Float Bowl	
●◆138	281164	Washer–Float Bowl	
●142	496519	Nozzle–Carburetor **Note:** 496623 Nozzle–Carb. (High Altitude) **Includes:** 281164 Washer–Float Bowl	
●147	231794	Pilot–Jet	
358	494241	Gasket Set	
★524	281370	Seal–Filler Tube	
★537	281106	Gasket–Air Cleaner	
●634	281168	Seal–Choke Shaft	
★634A	491323	Seal–Governor	
★842	270920	Seal–Oil Filler Cap	
★883	272293	Gasket–Muffler	
977	494385	Carburetor Gasket Set	
●987	281166	Seal–Throttle	

★ Included in Gasket Set–Part No. 494241.
◆ Included in Carburetor Gasket Set–Part No. 494385.
● Included in Carburetor Kit–Part No. 496622.

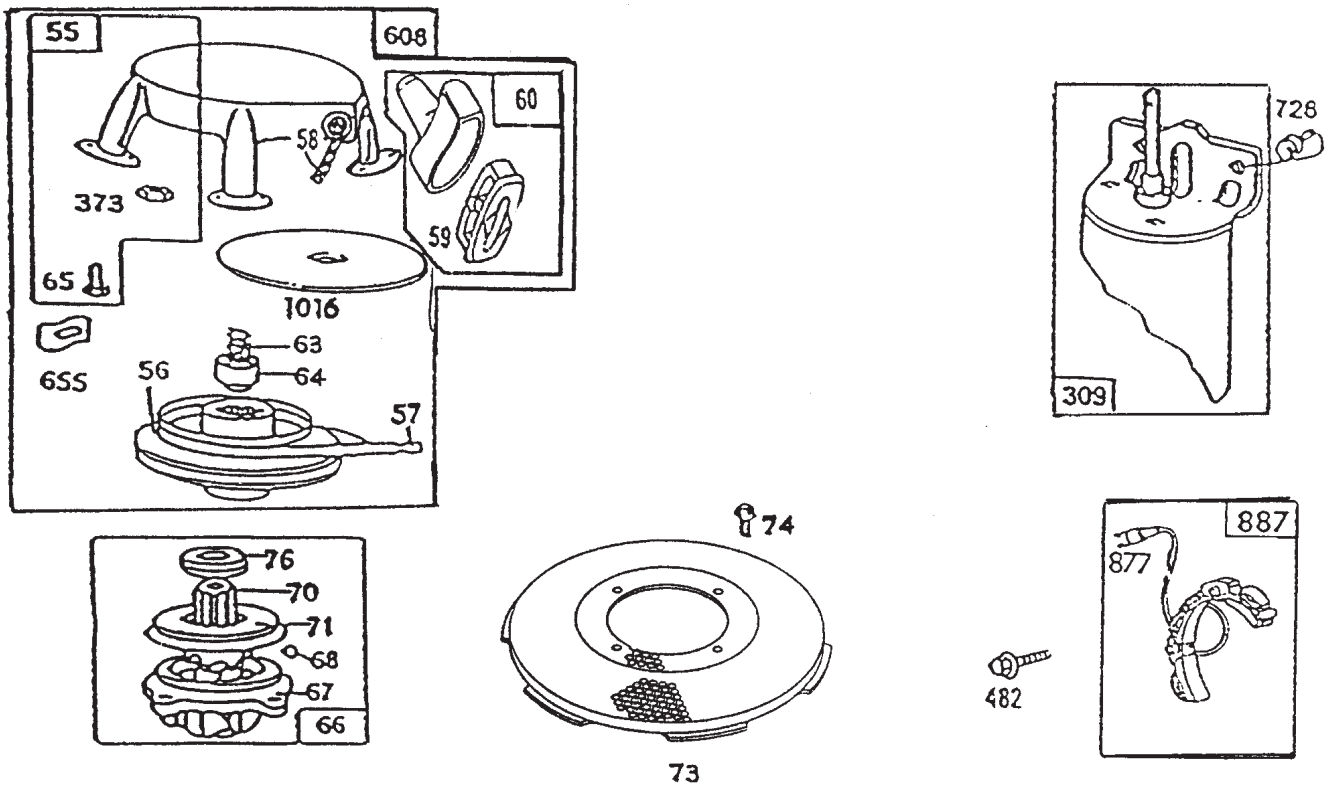

Assemblies include all parts shown in frames.

C—0787

REWIND — BRIGGS & STRATTON NO. 286707—0119—01

Ref. No.	Part No.	Description	No. Used
55	393576	Housing — Rewind Starter (Includes 63" Rope)	1
56	295871	Pulley — Rewind Starter	1
57	490179	Spring — Rewind Starter	1
58	66884	Rope — Rewind Starter (63" Long)	1
59	490653	Insert — Starter Handle	1
60	490652	Handle — Rewind Starter	1
63	260414	Spring — Ratchet	1
64	230543	Adapter — Ratchet Spring	1
65	94128	Screw — Hex. Hd. Sem	1
66	399671	Clutch Assembly — Rewind Starter	1
67	394897	Housing — Starter Clutch	1
68	63770	Ball — Clutch	1
70	298799	Ratchet — Rewind Starter Clutch	1
71	221653	Washer — Retainer	1

Ref. No.	Part No.	Description	No. Used
73	223859	Screen — Rotating	1
74	93042	Screw — Sem	1
76	68238	Washer — Ratchet, Sealing	1
309		Motor — Starting (12 Volt) See Illustrated Pages for Replacement Parts for Starter Motor.	1
373	92987	Nut — Hex.	1
482	93621	Screw — Sem	1
608	390391	Starter Assembly — Rewind	1
655	222598	Anchor — Spring	1
728	94627	Screw — Sem	1
877	393814	Diode and Connector Assy. Alternator (D.C.)	1
887	391529	Stator Assembly Alternator (D.C.)	1
1016	490817	Spacer	1

BRIGGS & STRATTON MODEL NO. 286707–0119–01

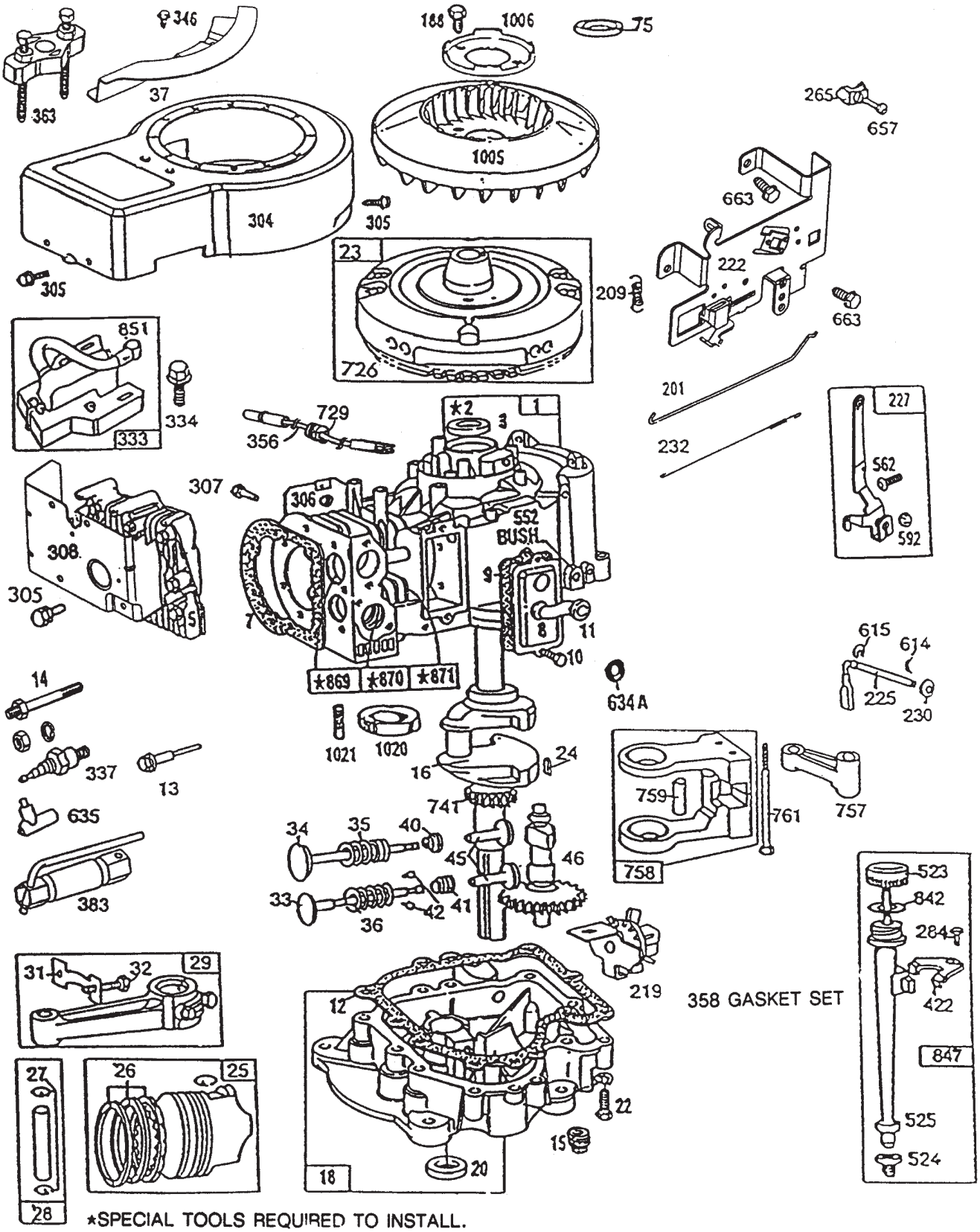

★SPECIAL TOOLS REQUIRED TO INSTALL.

SEE REPAIR INSTRUCTION MANUAL.

Assemblies include all parts shown in frames.

C–0788

BRIGGS & STRATTON MODEL NO. 286707—0119—01

Ref. No.	Part No.	Description	No. Used
1	490450	Cylinder Assembly	1
2	399265	Bearing — Cylinder Note: Requires Special Tools for Installation.	1
3	391086	Seal — Oil	1
5	494240	Head — Cylinder	1
7	271866	Gasket — Cylinder Head	1
8	391406	Breather Assembly	1
9	27803	Gasket — Valve Cover	1
10	94621	Screw — Sem	1
11	280100	Tube — Breather	1
12	271916	Gasket — Crankcase Cover (1/64" Thick)	1
*	271997	Gasket — Crankcase Cover (.005" Thick)	1
*	271996	Gasket — Crankcase Cover (.009" Thick)	1
13	94622	Screw — Cylinder Head (3" Long)	1
14	93781	Stud — Cylinder Head Uses: 90366 Lockwasher, 93203 Nut 231109 Spacer	1
15	94239	Plug — Oil Drain	1
16	490466	Crankshaft Note: Order Part Number 94196 For Timing Gear Key	1
18	494238	Base — Engine	1
20	291675	Seal — Oil	1
22	94624	Screw — Base Mtg. Sem	1
23	492326	Flywheel & Ring Gear Assy. Magneto	1
24	222698	Key — Flywheel	1
25	394661	Piston Assy. — Standard	1
	394662	Piston Assy. — .010" O.S.	1
	394663	Piston Assy. — .020" O.S.	1
	394664	Piston Assy. — .030" O.S.	1
		PISTON RING SETS Note: For Chrome Ring Set Standard Size, Order No. 392331	
26	391780	Ring Set — Piston Std.	1
	391781	Ring Set — Piston .010" O.S.	1
	391782	Ring Set — Piston .020" O.S.	1
	391783	Ring Set — Piston .030" O.S.	1
27	260924	Lock — Piston Pin	1
28	299691	Pin Assy. — Piston Std.	1
	391286	Pin Assy. — Piston .005" O.S.	1
29	490348	Rod Assembly — Conn. Note: For Connecting Rod with .020" Undersize Crankpin Bore, Order No. 490469.	1

Ref. No.	Part No.	Description	No. Used
31	222299	Lock — Conn. Rod Screw	1
32	92909	Screw — Connecting Rod	1
33	262246	Valve — Exhaust	1
34	262247	Valve — Intake	1
35	65906	Spring — Intake Valve	1
36	26828	Spring — Exhaust Valve	1
37	223752	Guard — Flywheel	1
40	221596	Retainer — Intake Valve	1
41	292260	Rotocoil — Exhaust Valve	1
42	93630	Retainer — Exhaust Valve Rotocoil	1
45	262248	Tappet — Valve	1
46	212897	Gear — Cam	1
75	224061	Washer — Spring	1
188	93535	Screw — Sem Fan Mount. (3/4" Long)	1
201	262767	Link — Governor	1
209	260871	Spring — Governor	1
219	490815	Oil Slinger, Governor Gear, & Bracket Assembly	1
222	493896	Plate — Governor Control	1
225	231058	Crank — Governor (1/4" Dia.)	1
227	493935	Lever Assembly — Governor	1
230	222450	Washer — Governor Crank (1/4" Inside Diameter)	1
232	262785	Spring — Governor Link	1
265	221535	Clamp — Casing	1
284	94419	Screw — Clamp Mounting	1
304	494269	Housing Blower (Red)	1
305	94619	Screw — Blower Housing Mounting, Sem	1
306	224545	Shield — Cylinder	1
307	94623	Screw — Cylinder Shield Mounting, Sem	1
308	491490	Cover — Cylinder Head	1
333	492341	Armature — Magneto	1
334	93381	Screw — Armature Mtg. Sem	1
337	802592	Plug — Spark	1
346	93705	Screw — Hex. Hd.	1
356	494328	Wire Assembly	1
358	494241	Gasket Set	1
363	19203	Puller — Flywheel	1
383	89838	Wrench — Spark Plug	1
422	224390	Clamp — Oil Filler Tube	1
523	490327	Cap & Dipstick — Oil Filler	1
524	68838	Seal — Filler Tube	1
525	280741	Tube — Oil Filler	1
552	231597	Bushing — Governor Crank (1/4" Inside Diameter)	1
562	92613	Bolt — Governor Lever	1

BRIGGS & STRATTON MODEL NO. 286707–0119–01

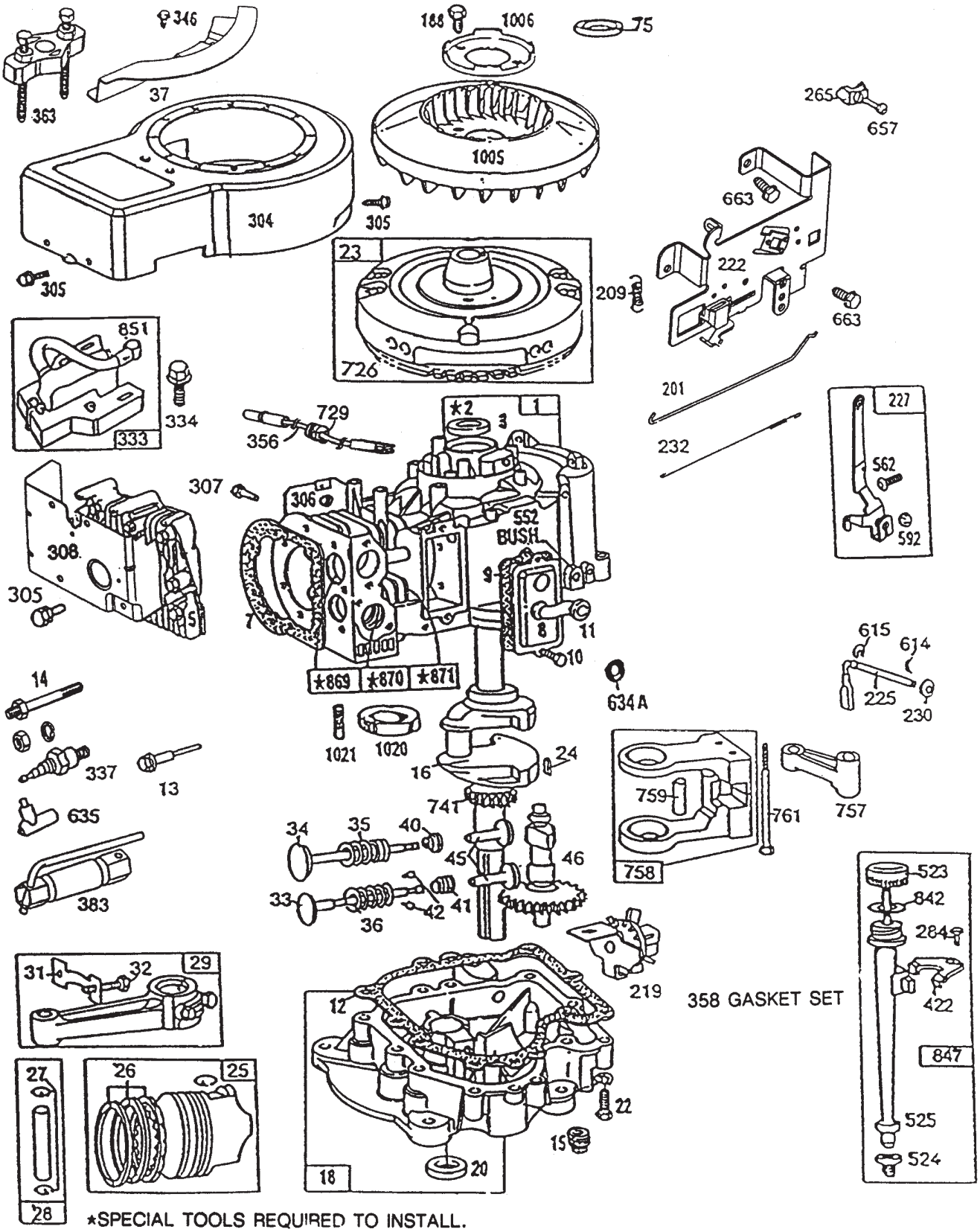

★SPECIAL TOOLS REQUIRED TO INSTALL.

SEE REPAIR INSTRUCTION MANUAL.

Assemblies include all parts shown in frames.

C–0788

BRIGGS & STRATTON MODEL NO. 286707—0119—01

Ref. No.	Part No.	Description	No. Used
592	231082	Nut — Hex. (10—24)	1
614	93306	Cotter — Hair Pin	1
615	93307	Retainer — Ring	1
634A	491323	Seal — Governor	1
635	66538	Elbow — Spark Plug	1
657	93496	Screw — Sem	1
663	94620	Screw — Hex. Hd.	1
726	392134	Gear — Ring (Incl. Mounting Parts)	1
729	281159	Clip — Lead Wire	1
741	262135	Gear — Timing	1
757	212359	Link — Counterweight	1
758	399891	Counterweight Assembly	1
759	298909	Pin — Counterweight	1
761	93875	Screw — Counterweight	1
842	270920	Seal — Oil Filler Cap	1
847	490474	Fill Group — Oil	1
8 51	221798	Terminal — Ignition Cable	1
869	261463	Seat — Intake Valve (Std.)	1
870	213316	Seat — Exhaust Valve (Std.)	1
871	261961	Guide — Exhaust Valve Note: 231218 Guide — Intake Valve (Brass) See Repair Manual	1
1005	280687	Fan — Flywheel	1
1006	223726	Retainer — Fan	1
1020	262243	Eccentric	1
1021	94160	PIn — Eccentric	1
*	494241	Kit — Gasket Set (Incl. Ref. #3, 7, 9, 12, 20, & 634A)	1

*Not Illustrated

BRIGGS & STRATTON MODEL NO. 286707–0119–01

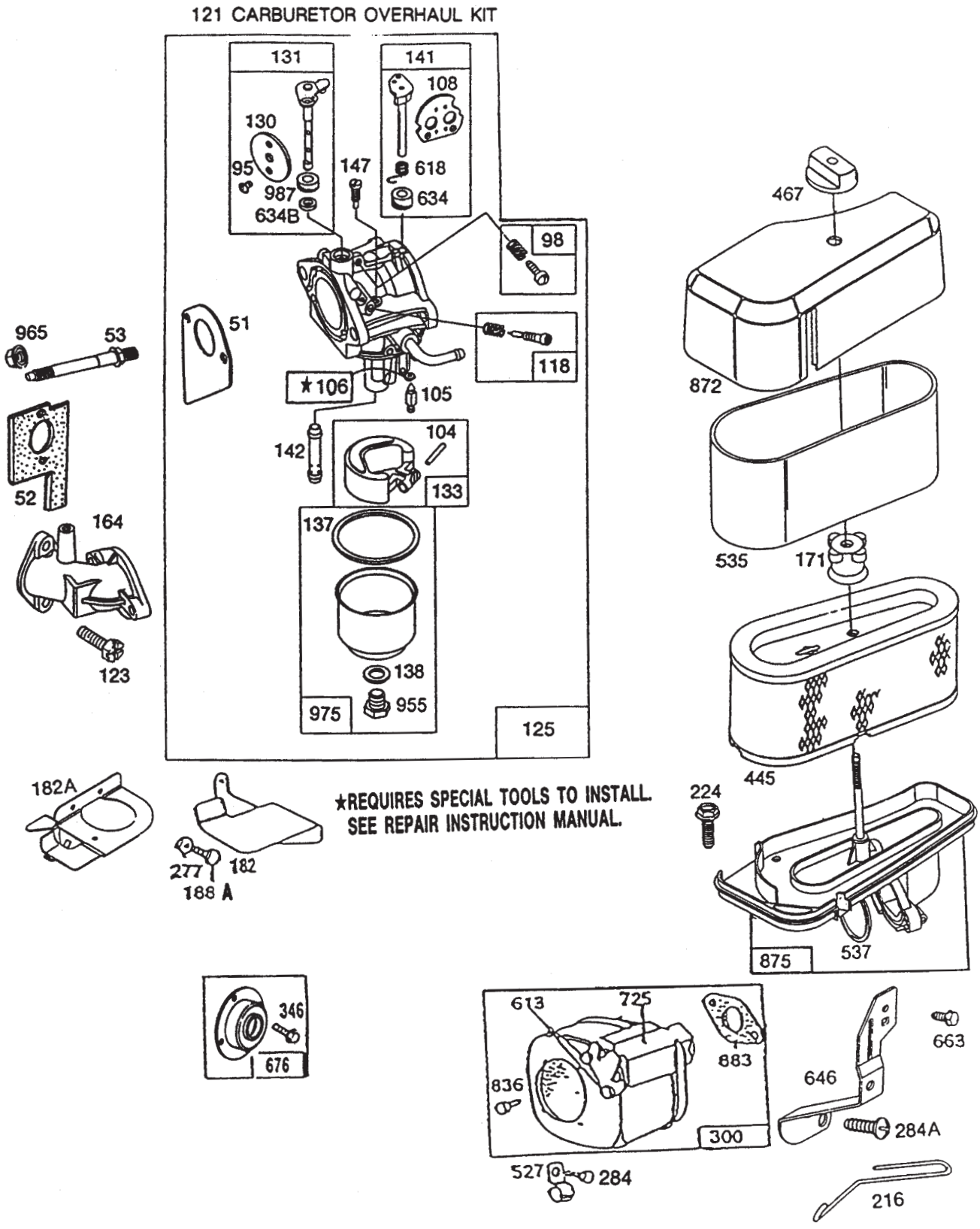

Assemblies include all parts shown in frames.

C–0789

BRIGGS & STRATTON MODEL NO. 286707–0119–01

Ref. No.	Part No.	Description	No. Used
51	272465	Gasket – Carburetor (Carburetor to Elbow)	1
52	270872	Gasket – Carburetor (Elbow to Cylinder)	1
53	94637	Stud – Carburetor, Mount.	1
95	94098	Screw – Throttle	1
98	494382	Screw – Idle Speed	1
104	231789	Pin – Float Hinge	1
105	231790	Valve Assembly Inlet Needle	1
106	281169	Inlet Valve Seat	1
108	224540	Valve – Choke	1
118	494383	Valve – Needle	1
121	494384	Kit – Carburetor Overhaul	1
123	94616	Screw – Elbow Mounting	1
125	494502	Carburetor Assembly	1
130	224539	Valve – Throttle	1
131	494379	Shaft & Lever, Throttle	1
133	494381	Float – Carburetor	1
137	281165	Gasket – Float Bowl	1
138	281164	Washer – Float Bowl Screw	1
141	494380	Shaft & Lever – Choke	1
142	494537	Nozzle Jet – Carburetor Note: 494499 High Altitude Kit Includes: 231796 Pilot Jet (High Altitude) 281164 Seat–Bowl Screw 494386 Nozzle High Altitude	1
147	231794	Pilot – Jet	1
164	213819	Carburetor j– Elbow	1
171	281051	Nut – Air Cleaner Mounting	1
182	223925	Bracket – Fuel Tank (R.H.)	1
182A	223866	Bracket – Fuel Tank (L.H.)	1
188A	93634	Screw – Sem (7/8” Long)	1
216	262766	Link – Choke	1
224	94513	Screw – Air Cleaner, Sem	1
277	22776	Washer – Flat	1
284	94419	Screw – Clamp Mounting	1
284A	94326	Screw – Air Cleaner	1
300	491413	Muffler – Exhaust	1
346	93705	Screw – Hex. Head	1
445	493909	Cartridge – Air Cleaner	1
467	493903	Knob – Air Cleaner	1
527	221428	Clamp	1
535	272403	Element – Air Cleaner	1
537	281106	O–Ring – Air Cleaner	1
613	93927	Screw – Hex. Head	1
618	262803	Spring – Choke Return	1
634	281168	Seal – Choke Shaft	1
634B	281167	Washer – Throttle Shaft	1
646	224546	Brace – Air Cleaner	1
663	94620	Screw – Hex. Head	1
676	396903	Deflector – Muffler	1
725	223023	Shield – Muffler	1
836	94513	Screw – Hex. Head	1
872	281104	Cover – Air Cleaner	1
875	494237	Body – Air Cleaner	1
883	270917	Gasket – Exhaust Pipe	1
955	94642	Screw – Fuel Bowl	1
965	94108	Locknut – Air Cleaner, Mtg.	1
975	494378	Bowl Ass’y – Carburetor	1
977	494385	Kit – Gasket, Carburetor	1
987	281166	Seal – Throttle Shaft	1
*	494384	Kit – Overhaul, Carburetor (Incl. Ref. #51, 95, 104, 105, 106, 137, 138, 142, 147, 634, 634B & 987)	1
*	494385	Gasket Set – Carburetor (Incl. Ref. #51, 137 & 138)	1
*	494241	Gasket Set (Incl. Ref. #537 & 883)	1

*Not Illustrated

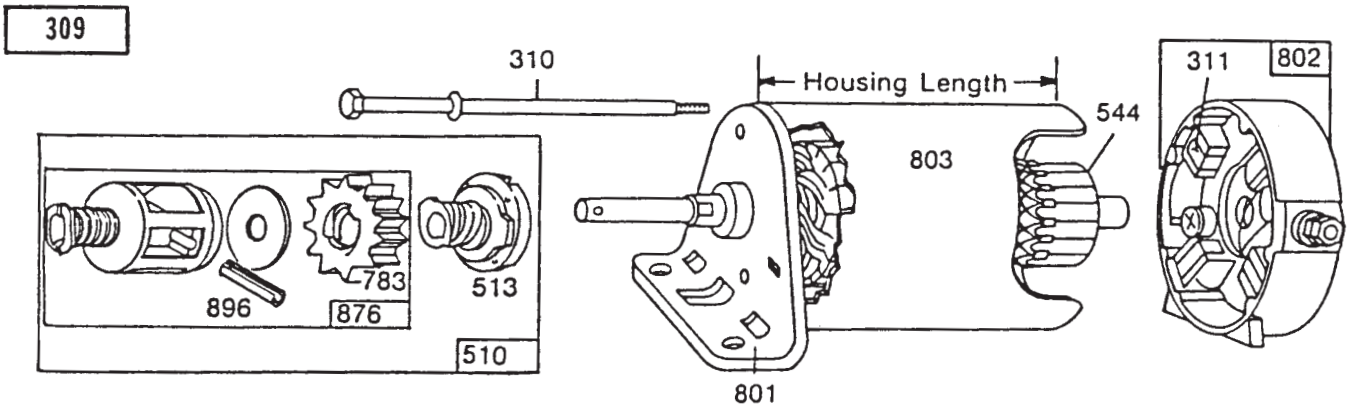

NOTE:
To identify Briggs & Stratton manufactured starter motors, measure the housing length.

C–0784

STARTER – BRIGGS & STRATTON

Ref. No.	Part No.	Description	No. Used
309	394805	Motor & Drive Assembly	1
309	494198	Motor & Drive Assembly (Model 286707–0119–01)	1
310	94003	Thru Bolt Assembly	1
310	94004	Thru Bolt Assembly (Model 286707–0119–01)	1
311	395538	Brush Assembly	1
510	490421	Drive Assembly (Incl. Ref. #513, 783, 876 & 896)	1
513	398003	Clutch Assembly	1
544	390837	Armature Assembly	1
544	391160	Armature Assembly (Model 286707–0119–01)	1

Ref. No.	Part No.	Description	No. Used
783	280104	Gear	1
801	394856	Drive End Cap Assembly (Incl. Brush Set)	1
802	395537	End Cap Assembly Commutator	1
803	398159	Housing Assembly (3–21/32” Long)	1
803	494205	Housing Assembly (4–3/8” Long) (Model 286707–0119–01)	1
876	490467	Retainer & Pin	1
896	94288	Roll Pin	1

TORO PART NUMBER INDEX

Part No.	Description	Pg. No.	Ref. No.	Qty.
110513	Bearing	2	2	4
147665	Screw – Phillips Hd.	6	1	2
147665	Screw – Phillips Head	4	1	2
3–6498	Washer – Thrust	2	5	5
7–0036	Key – Square	11	24	2
12–5820	Pulley – Idler	9	35	1
12–8819	Loose Parts	1	*	1
12–8829	Loose Parts	1	*	1
12–9020	Retainer – Belt	9	34	1
14–9999	Deck – Cutting, Recycler	13	49	1
19–1470	Bolt – Shoulder	5	20	1
23–0660	Switch – Ignition	4	10	1
26–0671	Bolt – Blade		39	2
26–0671	Bolt – Blade	13	39	1
27–9080	Bearing – Flange	2	15	4
28–0380	Spacer – Axle, Front	2	24	1
28–0540	Bolt – Shoulder	5	8	1
28–2480	Washer	11	15	2
28–2480	Washer	2	43	2
28–7350	Post – Pivot		16	1
28–7350	Post – Pivot	13	16	1
28–7890	Module – Interlock	6	11	1
28–8010	Spring – Torsion		10	1
28–8010	Spring – Torsion	13	10	1
28–8070	Lanyard	13	55	1
28–8080	Boot – Terminal	8	22	1
28–8130	Pin – Chute, Locking	13	54	1
38–1420	Switch – Interlock	7	2	1
40–6230	Spring – Torsion	13	51	1
44–5930	Assembly – Deflector		11	1
44–5930	Assembly – Deflector	13	11	1
47–0010	Arm – Suspension, Front	2	13	2
47–0540	Pedal	3	19	2
47–0550	Bracket – Brake, Pedal	3	17	1
47–0560	Bracket – Clutch, Pedal	3	12	1
47–0570	Spacer – Pedal	3	16	3
47–0590	Spindle – L.H.	2	*	1
47–0600	Spindle – R.H.	2	4	1
47–0610	Tie Rod – Adjustable	2	34	1
47–0700	Bearing – Flange	2	27	1
47–0760	Support – Axle, Front	2	11	1
47–0770	Shaft – Pivot, Pedal	3	8	1
47–0780	Retainer – Shaft	3	9	1
47–0930	Footrest – R.H.	1	22	1
47–0940	Footrest – L.H.	1	16	1
47–0960	Spring – Compression		3	1
47–0960	Spring – Compression	13	3	1
47–1140	Retainer – Spring, Top		2	2
47–1140	Retainer – Spring, Top	13	2	2
47–1180	Bracket – Engagement		1	1
47–1180	Bracket – Engagement	13	1	1
47–1200	Shaft – Adjusting		4	1
47–1200	Shaft – Adjusting	13	4	1
47–1290	Brake – Parking	1	10	1
47–1420	V–Belt		24	1
47–1840	Bracket – Height–of–Cut	5	13	1
47–1850	Lever – Height–of–Cut	5	6	1
47–1910	Solenoid	6	12	1
47–2060	Bracket – Brake, Parking	1	19	1
47–2961	Hose – Fuel Line	9	9	1
47–2981	Hose – Fuel Line	9	9	1
49–3242	Assy. – Wheel, Steering	4	5	1
54–3090	Cable – Battery Ground	9	37	1
54–9220	Decal – Caution, Deflector		12	1
54–9220	Decal – Caution, Deflector	13	12	1
55–3570	Cap – Fuel	9	14	1
56–2540	Tube – Vent, Battery	8	37	1
56–6590	Bolt – Wheel		33	
56–6590	Bolt – Wheel	13	33	2
56–7030	Body – Spindle		44	1
56–7030	Body – Spindle	13	44	1
56–7050	Tank – Fuel	9	15	1
56–7070	Spring – Torsion, Clutch	3	11	1
56–7080	Spring – Torsion, Brake	3	18	1
56–7130	Tower – Front	1	4	1
56–7140	Tower – Rear	1	8	1
56–7170	Guide – Shaft, Steering	1	6	1
56–7180	Cover – Front	2	30	1
56–7240	Bracket – Retaining, Spring	3	3	1
56–7400	Arm – Lever, H.O.C.	5	24	1
56–7430	Pin – Support	12	22	2
56–7470	Bracket – Rack, Steering	2	33	1
56–7500	Shaft – Steering	2	31	1
56–7520	Bushing – Sector	2	22	1
56–7530	Bolt – Shoulder	2	20	1
56–7570	Rod – Engagement	3	15	1
56–7650	Tube – Pivot	3	14	1
56–7670	Cable – Battery, Positive	9	21	1
56–7670	Cable – Positive	6	17	1
56–7710	Hold Down – Battery	8	26	1
56–7720	Post – Battery	8	21	1
56–7810	Decal – Brake, Parking	1	9	1
57–4060	Retainer – Front	9	16	1
57–4070	Retainer – Rear	9	20	1
57–9940	Spring – Brake	11	17	1
60–9730	Guide – Belt		26	2
60–9730	Guide – Belt	13	26	2
61–9760	Wheel – Deck		32	2
61–9760	Wheel – Deck	13	32	2
61–9780	Cap – Hub	11	14	2
61–9780	Cap – Hub	2	44	2
62–3760	Screw – Cap Hex. Hd.	9	27	1
62–3930	Spring – Extension	5	5	1
62–3930	Spring – Extension	3	6	1
62–4300	Pad – Battery	8	25	1
62–5480	Isolator – Seat	7	11	4
62–5490	Support – Fuel Line	9	10	1
63–5540	Base – Seat	7	3	1
63–5670	Tube – Bumper, Seat Rod	7	7	1
63–5830	Link – Suspension, Deck	5	16	2
63–8360	Key	4	6	1
65–2920	Pad – Pedal, Foot	3	5	2
65–5670	Bolt – Shoulder	5	21	1
65–5670	Screw – Shoulder	8	34	1
66–1340	Decal – Danger		34	1
66–1340	Decal – Danger	13	34	1
66–6740	Cover – Shaft, Steering	4	2	1
68–3650	Decal – Warning, Deflector		13	1
68–3650	Decal – Warning, Deflector	13	13	1
76–1090	Decal – Instructions	4	23	1
76–1340	Decal – Made In USA	5	26	1
76–1540	Arm – Suspension R.H.	12	16	1
76–1550	Arm – Suspension L.H.	12	*	1
76–1560	Spacer	12	13	2
76–1560	Spacer – Split	12	20	2
79–0370	Decal – Danger	1	7	1

*Not Illustrated

TORO PART NUMBER INDEX (Cont.)

Part No.	Description	Pg. No.	Ref. No.	Qty.
80–2310	Bracket – Bell Crank Mount	5	2	1
80–2320	Bracket – H.O.C., Engage	5	15	1
80–2330	Link – Bell Crank	8	35	1
80–2340	Bracket – Pivot, Inner	8	6	1
80–2350	Pivot – Outer	8	4	1
80–2360	Crank – Bell, Deck Engage	5	22	1
80–2370	Shaft W.A. – Pivot	8	5	1
80–2400	Lever W.A. – Engage	8	2	1
80–2430	Axle – Front	2	18	1
80–2450	Rack – Steering	2	19	1
80–2460	Tie Rod – Fixed	2	*	1
80–2530	Assembly – Brake		50	1
80–2530	Assembly – Brake	13	50	1
80–2550	Pad – Brake		6	1
80–2550	Pad – Brake	13	6	1
80–2560	Plate – Deck, Brake Mtg.		47	1
80–2560	Plate – Deck, Brake Mtg.	13	47	1
80–2570	Pin – Clevis		5	2
80–2570	Pin – Clevis	13	5	2
80–2580	Rod – Adjusting	13	52	1
80–2600	Battery – 12 Volt	8	24	1
80–2620	Rod – Base, Seat	7	8	1
80–2630	Kicker – 13	29	4	
80–4350	Shaft – Spindle		41	1
80–4350	Shaft – Spindle	13	41	1
80–4370	Shield – Bearing		42	1
80–4370	Shield – Bearing	13	42	1
80–4390	Spacer – Hardened		43	1
80–4390	Spacer – Hardened	13	43	1
80–4430	Blade – Recycler		40	1
80–4430	Blade – Recycler	13	40	1
80–4470	Pulley		22	1
80–4470	Pulley	13	22	1
80–4480	Deck – Cutting, Recycler		49	1
80–4490	Ring – Deck		48	4
80–4490	Ring – Deck	13	48	4
80–4570	Stiffener – Blade		37	1
80–4570	Stiffener – Blade	13	37	1
82–6150	Assy. – Cover, Discharage		14	1
82–6150	Assy. – Cover, Discharge	13	14	1
82–6270	Decal – Recycler		35	1
83–7010	Brace – Cover, Rear	13	17	1
83–7020	Spacer – Bearing		25	1
83–7020	Spacer – Bearing	13	25	1
88–3950	Assembly – Seat	7	1	1
88–9730	Rim	11	12	2
88–9800	Cover – Gate, Shift	6	24	1
88–9930	Switch – Micro, Short	6	4	1
88–9931	Switch – Micro	4	24	1
92–0860	Frame	6	14	1
92–0861	Frame – Rear	12	8	1
92–0862	Transaxle	11	8	1
92–0864	Standbar	12	5	1
92–0865	Support – Axle	12	9	2
92–0866	Body W.A. – Seat Support	6	8	1
92–0870	V–Belt – Traction	11	4	1
92–0871	Rod – Traction	9	29	1
92–0872	Rod – Brake	11	18	1
92–0873	Pulley – Engine	9	24	1
92–0874	Pulley	11	7	1
92–0875	V–Belt	13	24	1
92–0876	Guard – Front	2	37	1
92–0877	Panel – Seat Base, R.H.	6	21	1
92–0878	Panel L.H. – Base, Seat	5	9	1
92–0879	Spring	9	1	1
92–0880	Arm – Shift, Transaxle	11	23	1
92–0881	Bracket W.A. – Traction	9	4	1
92–0883	Plate – Mounting, Idler	9	2	1
92–0884	Lever W.A. – Shaft	8	10	1
92–0887	Support – Shift, Lower	8	19	1
92–0888	Support – Shift, Upper	8	14	1
92–0889	Link – Shift	11	1	1
92–0890	Control – Throttle	4	15	1
92–0891	Shaft W. A. – Shift	8	16	1
92–0894	Spring – Torsion	8	11	1
92–0895	Gate – Shift	6	3	1
92–0896	Retainer – Spring	8	29	1
92–0897	Spacer	12	1	1
92–0898	Guide – Belt	12	2	1
92–0899	Guide – Belt, Lower	11	21	1
92–1751	Decal – Shift Pattern	6	2	1
92–7243	Decal – Control Panel	5	27	1
92–7244	Decal – Deck Engage	4	9	1
92–7245	Decal – H.O.C.	4	21	1
92–7974	Tread – Foot R.H.	1	*	1
92–7975	Tread – Foot L.H.	1	15	1
92–7985	Decal – L.H. (Model 70080)	5	10	1
92–7986	Decal – L.H. (Model 70120)	5	10	1
92–7987	Decal – Recycler	1	3	1
92–7989	Decal – Important	2	39	1
92–7990	Insert – Wheel, Steering	4	4	1
92–9521	Decal – Recycler	13	35	1
217–80	Rim	2	3	2
218–461	Nut – Lock	4	7	1
218–560	Cap – Battery	8	28	6
231–116	Tire	2	42	2
231–117	Tire	11	10	2
232–27	Stem – Valve	11	16	2
232–39	Tube – Inner	11	11	2
232–44	Tube – Inner	2	{	2
233–25	Knob	4	13	1
233–48	Knob	8	1	2
233–48	Knob	5	19	1
237–27	Valve Stem w/Cap	2	41	2
237–143	O–Ring	8	27	2
2411–32	Ball Joint	8	31	1
2412–68	Clamp	4	17	2
2412–68	Clamp – Wire	7	4	1
2412–98	Clamp – Hose	9	8	2
251–297	Bearing		21	2
251–297	Bearing	13	21	2
257–11	Washer	8	18	1
283–2	Pin – Clevis	2	16	2
283–2	Pin – Clevis		45	2
283–2	Pin – Clevis	13	45	2
283–42	Pin – Clevis	12	18	2
283–52	Pin – Clevis	1	20	1
288–10	Cap – Pipe	9	22	1
289–19	Nipple – Pipe	9	23	1
302–5	Fitting – Grease	2	1	2
302–49	Fitting – Grease	2	17	2
321–4	Screw – Cap Hex. Hd.		8	1
321–4	Screw – Cap Hex. Hd.	13	8	1
321–4	Screw – Cap Hex. Hd.	3	10	1
321–4	Screw – Cap Hex. Hd.	5	11	4
321–4	Screw – Cap Hex. Hd.	8	12	2

*Not Illustrated

TORO PART NUMBER INDEX (Cont.)

Part No.	Description	Pg. No.	Ref. No.	Qty.
321−4	Screw − Cap Hex. Hd.	6	13	2
321−4	Screw − Cap Hex. Hd.	1	21	2
322−3	Screw − Cap Hex. Hd.		30	15
322−5	Screw − Cap Hex. Hd.	3	2	1
322−5	Screw − Cap Hex. Hd.	12	6	15
322−5	Screw − Cap Hex. Hd.	6	6	2
322−5	Screw − Cap Hex. Hd.	3	7	2
322−5	Screw − Cap Hex. Hd.	8	8	4
322−5	Screw − Cap Hex. Hd.		9	12
322−5	Screw − Cap Hex. Hd.	13	9	12
322−5	Screw − Cap Hex. Hd.	2	9	8
322−5	Screw − Cap Hex. Hd.	5	12	2
322−5	Screw − Cap Hex. Hd.	1	14	10
322−5	Screw − Cap Hex. Hd.	4	16	8
322−6	Screw − Cap Hex. Hd.		20	1
322−6	Screw − Cap Hex. Hd.	13	20	1
322−7	Screw − Cap Hex. Hd.	9	28	1
322−12	Screw − Cap Hex. Hd.	12	10	4
322−14	Screw − Cap Hex. Hd.	12	11	2
322−50	Screw − Cap Hex. Hd.	12	4	1
323−9	Screw − Cap Hex. Hd.	9	32	1
323−9	Screw − Hex Hd. Cap	12	21	2
323−14	Screw − Hex Hd. Cap	12	17	2
325−6	Screw − Cap Hex. Hd.	2	8	1
329−4	Screw − Cap Hex. Hd.	11	3	1
3218−1	Nut − Jam	6	18	2
3219−7	Nut − Hex. Hd.		23	4
3219−7	Nut − Hex. Hd.	13	23	1
3220−2	Nut − Hex. Jam	2	7	1
3230−18	Bolt − Carriage	2	32	2
3253−3	Washer − Lock	11	2	1
3253−3	Washer − Lock	6	16	4
3253−3	Washer − Lock	9	18	2
3253−6	Washer − Lock	9	26	1
3254−2	Washer − Lock, Int. Tooth	9	5	4
3254−2	Washer − Lock, Int. Tooth	11	20	1
3254−5	Washer − Lock, Int. Tooth	4	8	1
3256−14	Washer − Flat	6	9	1
3256−22	Washer − Flat	8	13	2
3256−22	Washer − Flat	1	18	2
3256−22	Washer − Flat	9	30	1
3256−23	Washer − Flat	12	7	12
3256−23	Washer − Flat	6	7	2
3256−23	Washer − Flat	1	13	8
3256−23	Washer − Flat	5	17	4
3256−23	Washer − Flat	4	18	7
3256−23	Washer − Flat	2	23	6
3256−23	Washer − Flat		27	4
3256−23	Washer − Flat	13	27	4
3256−23	Washer − Flat	8	33	2
3256−24	Washer − Flat	1	11	1
3256−24	Washer − Flat	12	15	4
3256−24	Washer − Flat	9	33	1
3256−25	Washer − Flat	9	25	1
3256−26	Washer − Flat	5	25	1
3256−27	Washer − Flat	3	13	3
3256−35	Washer − Flat	1	1	4
3256−49	Washer − Flat	13	56	1
3256−57	Nut − Lock		17	1
3256−57	Washer − Flat	9	36	1
3257−23	Key	11	6	1
3272−6	Pin − Cotter	3	1	3
3272−6	Pin − Cotter	5	4	2
3272−6	Pin − Cotter	1	12	1
3272−6	Pin − Cotter	2	14	2
3272−6	Pin − Cotter	11	22	1
3272−6	Pin − Cotter	9	31	1
3272−6	Pin − Cotter		36	4
3272−6	Pin − Cotter	13	36	2
3272−12	Pin − Cotter	2	45	2
3272−16	Pin − Cotter	11	9	1
3274−51	Screw − Hex. Socket Hd.	9	19	2
3290−134	Screw − Machine	6	10	1
3290−191	Nut − Speed	6	23	2
3290−282	Rivet	13	7	2
3290−282	Rivet	13	53	2
3290−307	Pin − Cotter, Hair	7	9	1
3290−354	Nut − Double	6	20	1
3290−354	Nut − Double	4	22	1
3290−378	Tie − Cable	7	6	1
3290−413	Washer − Belleville	5	7	8
3290−465	Washer − Belleville		38	1
3290−465	Washer − Belleville	13	57	1
3290−496	Nut − Retainer		28	4
3290−496	Nut − Retainer	13	28	4
3295−43	Rivet		7	2
3296−2	Nut − Lock	6	19	1
3296−4	Nut − Lock	8	30	1
3296−4	Nut − Lock	2	36	4
3296−8	Nut − Lock	2	12	1
3296−8	Nut − Lock	5	23	1
3296−8	Nut − Lock	8	36	1
3296−8	Nut − Lock		46	1
3296−8	Nut − Lock	13	46	1
3296−29	Nut − Lock	5	1	7
3296−29	Nut − Lock	1	2	14
3296−29	Nut − Lock	12	3	17
3296−29	Nut − Lock	3	4	3
3296−29	Nut − Lock	6	5	2
3296−29	Nut − Lock	9	6	2
3296−29	Nut − Lock	2	10	8
3296−29	Nut − Lock		19	24
3296−29	Nut − Lock	11	19	1
3296−29	Nut − Lock	13	19	24
3296−29	Nut − Lock	4	19	4
3296−29	Nut − Lock	8	32	4
3296−39	Nut − Lock	9	3	1
3296−39	Nut − Lock	12	19	1
3296−39	Nut − Lock		31	2
3296−39	Nut − Lock	13	31	2
3296−42	Nut − Lock	6	15	2
3296−42	Nut − Lock	8	15	2
3296−42	Nut − Lock	1	17	2
3296−42	Nut − Lock	5	18	1
3296−47	Nut − Lock	12	12	1
3296−59	Nut − Lock	12	14	3
3296−59	Nut − Lock	13	15	1
32103−2	Nut − Wing		18	1
32103−2	Nut − Wing	13	18	1
32103−12	Nut − Wing	8	20	1
32103−22	Nut − Wing	8	23	2
32104−76	Screw − Self Tap Acorn Hd.	1	5	9
32104−76	Screw − Self−Tapping	4	14	2
32107−11	Nut − Square	9	17	2
32120−47	Ring − Retaining	8	7	1
32120−64	Ring − Retaining	11	5	1

*Not Illustrated

TORO PART NUMBER INDEX (Cont.)

Part No.	Description	Pg. No.	Ref. No.	Qty.
32121–9	Pin – Roll	2	28	1
32121–16	Pin – Roll	8	17	1
32121–25	Pin – Roll	8	3	1
32121–78	Pin – Roll	4	3	1
32121–78	Pin – Roll	8	9	1
32122–14	Screw – Truss, Phillips Hd.	13	38	8
32128–20	Nut – Flange Hd.	7	5	4
32128–21	Nut – Lock, Flange Hd.	2	25	1
32128–23	Nut – Lock, Flange Hd.	2	26	1
32144–4	Screw – Special	2	21	2
32144–14	Screw	9	12	2
32144–14	Screw – Thread Forming	2	38	2
32144–112	Screw – Sems	6	22	2
32151–48	Ring – Retaining	11	13	2
32151–48	Ring – Retaining, External	2	35	2
32151–61	Ring – Retaining	5	14	2
32153–2	Nut – Lock		15	1

OPTIONAL EQUIPMENT

Easy Empty Bagging Kit . . . . . Model No. 79095
Twin Bag Bagger Kit . . . . . Model No. 79085
Tire Chains . . . . . Part No. 23–2340
Hi–Sail Bagging Blade . . . . . Part No. 33–4750
Wet Grass Bagging Kit . . . . . Part No. 38–5730

*Not Illustrated